The Deputy Secretary of Energy
Washington, DC 20585

August 17, 2006

MEMORANDUM FOR JAMES A. RISPOLI
ASSISTANT SECRETARY FOR ENVIRONMENTAL MANAGEMENT

FROM: CLAY SELL

SUBJECT: Approval of Preferred Technology Alternative (CD-1A) for the Plutonium Disposition Project at the Savannah River Site, Aiken, South Carolina.

Based on the recommendation from the Energy Systems Acquisition Advisory Board meeting conducted on July 24, 2006, I approve the selection of vitrification as the preferred technology alternative for the Plutonium Disposition Project at the Savannah River Site, Aiken, South Carolina. The scope of the project is to disposition up to approximately 13 MT of Plutonium that is not suitable for the MOX Fuel Fabrication Facility. The cost range for this project is estimated to be $300M - $500M, and the schedule range is 2012-2013.

As part of the conceptual design in support of CD-1, the EM must optimize the plant size based on more formal analysis of material characterization, potential for alternative disposition paths for portions of the plutonium inventory, and lifecycle costs. EM should proceed with preparation of appropriate National Environmental Policy Act (NEPA) documentation on plutonium consolidation and disposition at SRS. The NEPA documentation must be completed before requesting approval of CD-2 for the Plutonium Disposition Project.

cc: Under Secretary of Energy

Printed with soy ink on recycled paper

II. TABLE OF CONTENTS

	Page
I. Introduction	3
II. References	4
III. Inputs and Assumptions - General	5
IV. Metal-to-Oxide Conversion - Input and Assumptions	6
- Analytical Methods and Computations	
- Results	
V. Vitrification - Input and Assumptions	8
- Analytical Methods and Computations	
- Results	
VI. Conclusion	10
VIII. Attachments	
- Appendix A : Initial Weight Distribution	11
- Appendix B: Half Life, Specific Activity and Dose Release Factors	11
- Appendix C: Physical Properties of Oxides and Metals	12
- Appendix D: Annual Emissions - With and Without Impurities	13

I. INTRODUCTION

Description of the Plutonium Vitrification Project in the K Area Complex.

This project will provide for material receipt, feed preparation, metal-to-oxide conversion, milling and mixing, and vitrification of Pu feeds.

Material received at SRS will contain oxides, metals, or green fuel. A number of these containers will be surveyed each year to determine the condition of the container and its contents. Some containers may hold metal pieces which would first need to be converted to oxide before continuing on to the vitrification process. The Plutonium Vitrification Project will only process oxides and metals that are 3013 compliant or Green Fuel [Ref. 1, 2].

Metal feeds will be oxidized using Direct Metal Oxidation furnaces at 500°C[3], while vitrification of oxides will occur at 1500°C. Oxide feeds and Green Fuel will be correctly sized for processing using milling and mixing techniques. Processing of the plutonium glass will involve blending and milling the plutonium oxide feedstock with LaBS frit to form a fine particle sized (~20 μm), homogeneous mixture. The blending and milling will be accomplished in an attritor mill. The blended Pu feed and LaBS glass frit will then be fed to a Cylindrical Induction Melter (CIM) to produce the glass product. The CIM system will consist of a Platnium/Rhodium containment vessel, an induction heating system, a control system and a simple off-gas filtering system. The Pu oxide feed and frit will be melted to incorporate the plutonium oxide into the glass.To discharge, the glass will flow through the bottom of the melter by gravity through an inductively heated Pt-Rh drain tube into a stainless steel canister. Cans of plutonium glass will be removed from the glovebox environment using the Bagless Transfer technology. The cans will then be packaged in containers for shipment to DWPF.

Per 40 CFR 61 Appendix D[4] all material is considered to be gaseous if heated above 100°C. Therefore an approved alternative calculation will be performed for this project.

This calculation will determine emissions for a year of full operation. The emissions from metal-to-oxide conversion and vitrification of oxides are calculated separately, but summed to obtain total emissions.

The composition of the plutonium metals and oxides which will produce the greatest emissions is shown in Table 1.

Table 1: Bounding Composition[5]

Nuclides	Weight %	Amount of Nuclide (g)
Np^{237}	5.0%	220
Pu^{238}	2.0%	88
Pu^{239}	59.0%	2596
Pu^{240}	18.0%	792
Pu^{241}	1.0%	44
Pu^{242}	5.0%	220
Am^{241}	15.0%	660
Total	**100.0%**	**4400.0**

Table 2: Impurities[1]

Nuclides	Weight %	Amount (g)
Cl	30.0%	1470
F	70.0%	3080
Be	10.2%	500.0
Ni	10.2%	500.0

+ For purposes of this calculation it is assumed that only one impurity is present in each 3013 container.

II. REFERENCES

1. Document WSRC-SA-2002-00008, Rev. 0, 12/03, “Safety Analysis Report for Packaging Model 9975”, pgs. 1-13 and 1-14.
2. Hanford Unirradiated Fuel Package (HUFP) Safety Analysis Report, HNF-28554, Rev. B, 3/06 (OUO).
3. Engineering Calculation Q-CLC-K-00113, NESHAP Evaluation of the Container Surveillance and Storage Capability Project in 105-K.
4. 40 CFR 61, Subpart H, Appendix D.
5. Project and Process Information provided by Leeper, P., Traver, L., and Kahook, S., 4/05-5/05.
6. Vitrified Plutonium Waste Form Data for Yucca Mountain License Application, WSRC-TR-2005-00125, Rev. 0, 3/2005, Marra, J. C., Hackney, M. K., and Claxton, R. E..
7. AP-42 Factors, Section 11.15, Table 11.5-1 and Figure 11.5-5, Environmental Protection Agency, pgs. 11.15-1 thru -10.
8. Technical Evaluation of Candidate Alternatives for Treating High Chloride Content Plutonium Oxides at the Plutonium Finishing Plant, Gerber, M. and Sevigny, G., April, 2002.
9. The Health Physics and Radiological Health Handbook, Sheleien, B., 1992 Revised Ed., Scinta, Inc., Silver Springs, MD (Table 8.4.1, pg. 265).
10. Y-ASD-G-00002, Alternative Study for Locating Plutonium Vitrification Process in Existing Savannah River Site Process Facilities, Rev. 0, June 8, 2004. (UCNI)
11. Throughput Basis for the Plutonium Vitrification Facility, Pre-Decisional Draft, SRT-RPP-2004-00037, Marra, J. C., March 1, 2004.
12. Savannah River Site Title V Air Permitting Compliance Manual, WSRC-IM-94-53, Rev. 2, 10/4/96.
13. Projected Characteristics of Nominal Feeds to Plutonium Disposition Project, SRNL-OPD-2007-00008, Rev. 0, 3/9/07 (U).
14. Nuclides and Isotopes, Chart of Nuclides, Parrington, J., 15th Edition, 1996, General Electric Co. and KAPL, Inc., San Jose, CA.
15. Lee, P. L., “K Area NESHAP Dose-Release Factors for Potential Ground Level Releases, SRNL-EST-2005-00077, 5/4/05.
16. CRC Handbook of Chemistry and Physics, 3rd electronic edition, 2000, Section 4, The Elements, Hammond, C. R., and Vapor Pressure Of The Metallic Elements, Alcock, C. B..
17. Table of Radioactive Isotopes, Browne and Firestone, R. B., Wiley-Interscience Publishers, NY, 1986.
18. Plutonium Handbook, A Guide to the Technology - Volume II, Wick, O. J., 1980, The American Nuclear Society, LaGrange Park, IL, pg. 341.
19. Journal of Chemical Physics, Volume 62, Ackermann, "*Thermodynamic Properities of NpO* ", 1975, Royal Society of Chemistry, London, pgs. 108-112.
20. The Chemistry of Americium, Schultz, W. W., 1976, Technical Information Center, Energy Research & Development Administrations, Oak Ridge, TN, pgs. 152-153.
21. Tables of Thermodynamic and Transport Properties of UO2, Fink, J. K., 1982, Argonne National Laboratory, Chicago, IL.
22. Oxide Handbook, Plenum Press, Edited by Samsonov, G. V., 1973 NY
23. http://www.lesker.com/newweb/Technical_Info/MaterialDeposition.cfm?CFID=722541&CFTOKEN=66646738& section=matdeptab&init=skip
24. Handbook of Vapor Pressure, Volume 4, Inorganic Compounds and Elements, Yaws, C. L., 1995, Gulf Publishing Company, Houston, TX
25. Material Safety Data Sheet - HCl, Air Liquide, Rev. 1, AL069, 7/15/05.
26. M&O-PUD-2006-00066, Rev. 0, *Pu Immobiliziation - Induction Melter Testing Preliminary Information*, Jones, T. M. and Miller, D. H., 9/15/06.
27. Material Safety Data Sheet - Electronic Space Products International.
28. Input and Assumptions for Processing and Storage of 3013 Containers in 235-F, S-CLC-F-00471, Rev. 2, 2/16/05 (UCNI).
29. Hanford Materials for 9975, N-CLC-G-00096, Rev. 0, 12/7/01, (U).

III. Inputs and Assumptions

It is assumed that the vitrification step is the throughput limiting step due to an approximate 12 hour cycle time per batch. It is assumed that there will be 10 melters to ensure that the material is produced in the expected operational life of 6-10 years. It is assumed that 2 attritor mills and 3 bagless tranfer units will be adequate to support the facility throughput requirements considering an approximate 60% utiltiy of melters. For purposes of this calculation it is assumed that operations will occur 24 hours per day for 365 days per year. This will allow for operational flexibility of the project.

Overall Process:

# of Furnaces	=	2	
# of Melters	=	10	
# of Attritors	=	2	
# of Bagless Tranfer Units	=	3	
# of 3013 Cans per Day	=	5	minimum number with 2 furnaces operating or 2.5 cans per furnace per day
Mass of Pu feed per 3013	≤	4400	g; a 3013 container can hold 5 kg of material, with impurities, but only 4.4 kg of the material can be present as PuO/UO to comply with the 3013 Standard (including impurities[1]).
Ratio of frit to oxide	=	9:1	mixture
	assume ≈	9	kg frit per Vit Can
	assume ≈	1	kg Pu mixture per Vit Can
ature of metal-to-oxide conversion	=	500	^{o}C
Temperature at vitrification	=	1500	^{o}C

Note 1: Feed material consists of Pu, U and other radionuclides.

Note 2: Impurities are generally assumed to be up to 500 grams. However, total impurity limit is the maximum non-Pu/U mass allowed by DOE-STD-3013 (70%)[1].

Note 3: While 957 grams[17] is provided, for simplicity in the calculation it is assumed that the Vit Can will hold 1/4 of contents of 3013 container (~1000 g).

Note 4: For this calculation the rad material and nonrad impurities for which environmental air emissions regulations apply are the ones incorporated herein.

Note 5: Processes considered in this calculation are metal oxidation and oxide vitrification Dust generated during feed preparation activities (including milling and mixing) and transfer of material are considered to be minimal compared to the heating processes[7].

Note 6: For this calculation it is assumed that the total amount of material present is 4400 g with impurities[1].

Note 7: Impurities may be present in the materials. Impurities may be present as Al, B, Be Cl, F, Li, Mg, Na, Ni, V, Ta, and C. Up to 500 g may be present as Be or Ni. Up to 70% of the total material in some containers may be present as F and 25-30% of total material may be present as Cl[1, 8].

IV . METAL-TO-OXIDE CONVERSION

A. Input and Assumptions

Metals will be heated until metal-to-oxide conversion is complete (approximately 6 hours per batch; 2.5 batches per furnace per day). Two furnaces will be available. Contents of 1 container = 4.4 kg as PuO or PuO-UO mixture with impurities. While the container can hold 5 kg, the maximum amount of radionuclides allowed is 4.4 kg.

Temperature for metal-to-oxide conversion = 500 ^{o}C = 773.15 ^{o}K

R_u =	82.05	cc atm / g-mole ^{o}K; (universal gas constant)
W_i =		$\rho_g F_g \tau X_{vi}$ (1440 min/day) = estimate emissions from a single furnace for a whole year.
		where t = 365 days available for metal oxidation or oxide stabilization.
F_g =	28317	cc/min (1 CF), (Ref. 1); furnace exhaust gas flowrate will be < 1 CF.
Cf_1 =	0.001	, correction factor for HEPA filter on the glovebox and a sand filter.
	1440	min/day (conversion factor)

The project assumes a minimum total of 5 batches per day will be produced utilizing 2 furnaces. For conservatism this calculation considers that the furnaces will operate 24 hours per day to ensure that any process changes may be covered.

This calculation assumes the following:

# of furnaces operating	= 2
# of batches per furnace per day	= 5
# of hours for metal-to-oxide conversion per batch	= 6
total number of operating hours per furnace	= 24

B. Analytical Methods and Computations

Determination of dose consequence for metals.

Z_i = Weight Percent / M_i = Weight / M_i = Moles of component i, g-mole
X_i = $Z_i / \Sigma Z_i$ = Mole fraction, dimensionless
M_i = Molecular Weight of metal *i* , g/g-mole

p_i = Partial pressure of component *i* , atm; ($p_i = X_i P_i^o$, Raoult's Law)
X_i = Mole fraction of component *i* in metal, dimensionless
P_i^o = Vapor pressure of pure component *i* , atm (Appendix C)

$P_v = \Sigma p_i$ = total vapor pressure (atm)
$y_i = p_i / P_v$ = Vapor mole fraction of component i, dimensionless
$M_v = \Sigma y_i M_i$ = Molecular weight of vapor mixture, g/g-mole
$X_{vi} = M_i / M_v$ = Vapor fraction of each metal

Table 3: Metal and Vapor Mole Fractions

Nuclide	Amt of Nuclide (g)	Mi (g/g-mole)	Zi (g-mole)	Xi	Pio (atm)	pi (atm)	yi	yi Mi (g/g-mole)	Xvi
Np237	2.20E+02	237	9.281E-01	5.051E-02	8.03E-25	4.056E-26	4.591E-13	1.088E-10	4.514E-13
Pu238	8.80E+01	238	3.697E-01	2.012E-02	1.31E-18	2.642E-20	2.990E-07	7.117E-05	2.953E-07
Pu239	2.60E+03	239	1.086E+01	5.911E-01	1.31E-18	7.760E-19	8.783E-06	2.100E-03	8.710E-06
Pu240	7.92E+02	240	3.299E+00	1.796E-01	1.31E-18	2.358E-19	2.668E-06	6.406E-04	2.657E-06
Pu241	4.40E+01	241	1.826E-01	9.937E-03	1.31E-18	1.305E-20	1.477E-07	3.559E-05	1.476E-07
Pu242	2.20E+02	242	9.089E-01	4.947E-02	1.31E-18	6.495E-20	7.351E-07	1.779E-04	7.381E-07
Am241	4.40E+02	241	1.825E+00	9.934E-02	8.89E-13	8.836E-14	1.000E+00	2.411E+02	1.000E+00
Total	4.40E+03		1.837E+01	1.0		8.836E-14	1.0	2.411E+02	1.0

Mv = S(yiMi) =	2.411E+02 g/g-mole
Pv = Spi =	8.836E-14 atm

$\rho\gamma$ = Mv Pv / Ru T = vapor above metal at the elevated temperture using ideal gas law

$\rho\gamma$ = Density of vapor, g/cc

Ru = Universal gas constant = 82.05 cc atm / g-mole oK

T (oK) = T (oC) + 273.15 = 773.15

$\rho\gamma$ = (241.1 g / g-mole)(1.3400E-13 atm) / (82.05 cc atm/g-mole oK) (773.15 oK)

= 5.091E-16 g/cc

SAi = ARa T1/2, Ra / Ai T1/2, I (Ref. 9)

Wi = $\rho\gamma$ $\Phi\gamma$ τ Ξωι (1440 μιν/δαψ) = εστιματεδ εμισσιονσ φρομ α σινγλε φυρναχε φορ α ωηολε ψεαρ φορ οξιδε σταβιλιζατιον

τ = 365 days, time available for furnace operation. Metals will be oxidized for 6 hours per batch; 2 batches per day will be processed.

Fg = 28317 cc/min, (1 CF); the exhaust gas flowrate from the furnace will be < 1 CF (Ref.3).

Cf = 0.001, correction factor for HEPA filter and Sand Filter.

1440 min/day (conversion factor)

ECi = Wi SAi Cf = Emissions in Curies

Table 4: Annual Estimated Metals Emissions

Nuclides	SAi (Ci/g)	ρ (g/cc)	Wi (g/yr)	HEPA & SF (Cf)	ECi (Ci/yr)	Dose Release Factor (mrem/Ci)	Total Dose (mrem/yr)
Np237	7.130E-04	3.358E-16	2.256E-18	1.000E-03	1.608E-24	2.440E+00	3.925E-24
Pu238	1.714E+01	3.358E-16	1.475E-12	1.000E-03	2.529E-14	1.630E+00	4.122E-14
Pu239	6.217E-02	3.358E-16	4.353E-11	1.000E-03	2.706E-15	1.760E+00	4.763E-15
Pu240	2.279E-01	3.358E-16	1.328E-11	1.000E-03	3.026E-15	1.750E+00	5.296E-15
Pu241	1.030E+02	3.358E-16	7.377E-13	1.000E-03	7.598E-14	2.780E-02	2.112E-15
Pu242	3.980E-03	3.358E-16	3.689E-12	1.000E-03	1.468E-17	1.670E+00	2.452E-17
Am241	2.680E+00	3.358E-16	4.997E-06	1.000E-03	1.339E-08	2.680E+00	3.589E-08
Total			4.997E-06		1.339E-08		3.589E-08
							7.178E-08 mrem/yr;

# of furnaces: **2**

V. VITRIFICATION

A. Input and Assumptions

Oxide-frit mixture will be heated until vitrification is complete (approximately 2 hrs per batch, 4 batches per day per melter). Ten melters will be available.
Contents of 1 container for vitrification is 10 kg as PuO-frit mixture (at 9:1 ~ 1 kg PuO or PuO/UO plus impurities and 9 kg frit).

(A 3013 container may hold 4.4 kg as PuO/UO with impurities. The maximum amount of Pu allowed per container is 4.4 kg. Impurities are generally assumed to be up to 500 grams (Be or Ni) of contents of a 3013 container. However, total impurity limit is the maximum non-Pu/U mass allowed by DOE-STD-3013; for F this may be 70% (Ref. 1). Cl is considered to be present in amounts up to 25-30% (Ref. 8).
(Green Fuel: 17 pins will be loaded into a fuel pin can; this will be considered equivalent to one 3013. Contents of one 3013 will become 8 vit cans when 9:1 addition of frit occurs. Only one vit can of Green Fuel will be vitrified per day (Ref. 10). This calculation assumed same number of GF as regular 3013 oxides processed per day.

Temperature for vitrification = 1500 ^{o}C = 1773.15 ^{o}K

The project assumes a total of 4 batches per day will be produced utilizing 10 melters. For conservatism this calculation considers twice that amount of material will be processed to ensure that any process changes may be covered (Ref. 11).

This calculation assumes the following:

# of melters operating = 10
# of batches per melter per day (Ref. 26) = 4
# of hours per batch for vitrification = 2
total number of operating hours per melter = 8

B. Analytical Methods and Computations

Determination of dose consequence for the vitrification process.
Note: The same methodology is used to calculate the dose consequence for vitrification as for metal oxidation.

Table 5: Mole Fraction

Nuclide	Amt of Nuclide (g)	Mi (g/g-mole)	Zi (g-mole)	Xi	Pio (atm)	pi (atm)	yi	yi Mi (g/g-mole)	Xvi
Np237	4.75E+01	269	1.766E-01	2.608E-03	5.00E-06	1.30E-08	8.618E-08	2.319E-05	7.052E-08
Pu238	1.90E+01	270	7.036E-02	1.039E-03	2.89E-08	3.01E-11	1.988E-10	5.369E-08	1.633E-10
Pu239	5.61E+02	271	2.068E+00	3.055E-02	2.89E-08	8.84E-10	5.844E-09	1.584E-06	4.818E-09
Pu240	1.71E+02	272	6.286E-01	9.286E-03	2.89E-08	2.69E-10	1.776E-09	4.833E-07	1.470E-09
Pu241	9.50E+00	273	3.480E-02	5.141E-04	2.89E-08	1.49E-11	9.834E-11	2.685E-08	8.165E-11
Pu242	4.75E+01	274	1.733E-01	2.560E-03	2.89E-08	7.41E-11	4.898E-10	1.342E-07	4.083E-10
Am241	9.50E+01	273	3.479E-01	5.140E-03	5.28E-07	2.72E-09	1.795E-08	4.901E-06	1.491E-08
Al2O3	9.73E+02	102	9.546E+00	1.410E-01	1.32E-07	1.86E-08	1.226E-07	1.250E-05	3.802E-08
B2O3	1.27E+03	70	1.818E+01	2.685E-01	3.51E-03	9.42E-04	6.224E-03	4.332E-01	1.318E-03
Gd2O3	1.31E+03	362	3.624E+00	5.354E-02	0.00E+00	0.00E+00	0.000E+00	0.000E+00	0.000E+00
La2O3	1.85E+03	326	5.675E+00	8.384E-02	1.02E+00	8.52E-02	5.632E-01	1.835E+02	5.581E-01
Nd2O3	1.46E+03	336	4.338E+00	6.409E-02	1.02E+00	6.51E-02	4.306E-01	1.449E+02	4.406E-01
SrO	1.95E+03	104	1.878E+01	2.775E-01	9.40E-08	2.61E-08	1.724E-07	1.786E-05	5.433E-08
SiO3	2.43E+02	60	4.050E+00	5.983E-02	5.44E-08	3.25E-09	2.150E-08	1.292E-06	3.928E-09
Total	10000.00		6.769E+01	1.000E+00		1.513E-01	1.0	3.288E+02	1.0

Mv = S(yiMi) = 3.288E+02 g/g-mole
Pv = Spi = 1.513E-01 atm

Table 6: Annual Estimated Emissions

Nuclides	SAi (Ci/g)	ρ (g/cc)	Wi (g/yr)	HEPA & SF (Cf)	ECi (Ci/yr)	Dose Release Factor (mrem/Ci)	Total Dose (mrem/yr)
Np237	7.130E-04	3.420E-04	1.196E-01	1.000E-03	8.531E-08	2.440E+00	2.081E-07
Pu238	1.714E+01	3.420E-04	2.771E-04	1.000E-03	4.749E-06	1.630E+00	7.741E-06
Pu239	6.217E-02	3.420E-04	8.173E-03	1.000E-03	5.081E-07	1.760E+00	8.943E-07
Pu240	2.279E-01	3.420E-04	2.494E-03	1.000E-03	5.683E-07	1.750E+00	9.945E-07
Pu241	1.030E+02	3.420E-04	1.385E-04	1.000E-03	1.427E-05	2.780E-02	3.967E-07
Pu242	3.980E-03	3.420E-04	6.927E-04	1.000E-03	2.757E-09	1.670E+00	4.604E-09
Am241	2.680E+00	3.420E-04	2.529E-02	1.000E-03	6.777E-05	2.680E+00	1.816E-04
Al2O3		3.420E-04	6.450E-02	1.000E-03			
B2O3		3.420E-04	2.235E+03	1.000E-03			
Gd2O3		3.420E-04	0.000E+00	1.000E-03			
La2O3		3.420E-04	9.468E+05	1.000E-03			
Nd2O3		3.420E-04	7.475E+05	1.000E-03			
SrO		3.420E-04	9.218E-02	1.000E-03			
SiO3		3.420E-04	6.665E-03	1.000E-03			
Total			1.697E+06		8.795E-05		1.919E-04
							1.919E-03 mrem/yr;

# of melters: **10**

APPENDIX A: INITIAL WEIGHT DISTRIBUTION

Table A: Bounding Isotopic Distribution

Nuclides	Weight %	Amount of Nuclide (g)
Np^{237}	5	220
Pu^{238}	2	88
Pu^{239}	59	2596
Pu^{240}	18	792
Pu^{241}	1	44
Pu^{242}	5	220
Am^{241}	10	440
Total	**100.0**	**4400.0**

* Information provided by CSSC Project Design Authority (Ref.3).
Other compositons were reviewed, but this one produced the highest emissions.

APPENDIX B: HALF LIFE, SPECIFIC ACTIVITY, AND DOSE RELEASE FACTORS

Table B: Half Life, Specific Activity, and Dose Release Factors[1]

Decay Isotope	Half Life[3] (d, y)		Atomic Wt. (g)	Specific Activity (Ci/g)	Dose Release Factors (mrem/Ci)[4]
Np-237	2.140E+06		237	7.13E-04	2.44E+00
Pu-238	8.774E+01		238	1.71E+01	1.63E+00
Pu-239	2.407E+04		239	6.22E-02	1.76E+00
Pu-240	6.537E+03		240	2.28E-01	1.75E+00
Pu-241	1.440E+01		241	1.03E+02	2.78E-02
Pu-242	3.750E+05		242	3.98E-03	1.67E+00
Am-241	4.322E+02		241	2.68E+00	2.68E+00

1. Half Lifes shown in units other than 'years' are designated as d = days.
2. Dose Release Factors are for K Area at 0 m elevation.
3. A conversion factor of 27.03 is used to get to the desired SpA units of Ci/g from Beq/g.
4. Dose Release Factors, Specific Activities, and Half Lives were obtained from the following: Ref.9, 14 and 15.

To calculate Specific Activities, use the equation below.

If the half lives of both isotopes (Ra^{226} and the isotope of interest) are in the same units of time (i.e. years) the following equation, taken from Ref. 5, can be used to calculate specific activity in Ci/g:

$$SA_i = \frac{A_{Ra} * T_{1/2,\,Ra}}{A_i * T_{1/2,\,i}}$$

$A_{Ra\,226}$ = 226 g/mol
$T_{1/2,\,Ra\,226}$ = 1.60E+03 years
= 5.84E+05 days

A_i = 234 g/mol
$T_{1/2,\,i}$ = 2.45E+05 years
SA_i = 6.31E-03 Ci/g

APPENDIX C: PHYSICAL PROPERTIES OF OXIDES AND METALS

Table C(a): Physical Properties of Oxides and Metals

	Oxide					Metal			
Nuclide	**MW g**	**MP °C**	**BP °C**	**VP Pi^o, atm ^{Ox}**	**VP Pi^o, atm ^{Vit}**	**MW g**	**MP °C**	**BP °C**	**VP Pi^o, atm**
Np^{237}	269	2547	--	2.630E-09	5.000E-06	237	640	3902	8.030E-25
Pu^{238}	270	2400	--	1.120E-09	2.895E-08	238	640	3228	1.313E-18
Pu^{239}	271	2400	--	1.120E-09	2.895E-08	239	640	3228	1.313E-18
Pu^{240}	272	2400	--	1.120E-09	2.895E-08	240	640	3228	1.313E-18
Pu^{241}	273	2400	--	1.120E-09	2.895E-08	241	640	3228	1.313E-18
Pu^{242}	274	2400	--	1.120E-09	2.895E-08	242	640	3228	1.313E-18
Am^{241}	273	2175	--	4.150E-11	5.284E-07	241	1176	2011	8.894E-13
Al	102	2046	2980	5.845E-16	1.316E-07	27	660	2056	5.485E-16
B	70	450	1250	1.316E-07	3.508E-03	11	2300	2550	1.316E-09
Gd	362	2395	--	--	0	157	--	--	--
La	326	2300	4200	1.02E+00	1.02E+00	139	--	--	--
Nd	336	2315	--	--	1.02E+00	144	--	--	--
Sr	104	2430	3000	1.93E-10	9.40E-08	88	--	--	--
Si	60	1720	1977	3.57E-14	5.44E-08	28	--	--	--
Ni	75	1957	--	9.986E-17	1.316E-07	59	1455	1955	6.316E-22
Be	25	2530	--	1.000E-16	1.406E-12	9	1278		
Cl	95.210	714	1412	9.870E-01	9.870E-01	95	724	--	9.870E-01
F	83.977	1290	1275	1.316E-03	1.316E-03	84	-219.62	-188.14	1.320E-03

- Melting and Boiling Points and Vapor Pressures were obtained from the following: Ref. 17-26.
- Assume Cl is present as $MgCl_2$ and F is present as AlF_3; may be present in offgas as HCl or HF.
- Al, B, La, Si, Sr, Nd, and Gd listed as oxides in LaBS frit composition (Ref. 22).
- Assume VP for Nd is similar to that for La (since part of rare earth family and similar MPs)
- Gd VP = 0 (Ref. 27).
- Impurities may Be present in the materials. Impurities may Be present as Al, B, Be, Cl, F, Li, Mg, Na, Ni, V, Ta, and C. Up to 500 g may be present as Be or Ni. Up to 70% of the total material in some containers may be present as F and up to 30% of material may be present as Cl.

To calculate Vapor Pressures:

For P in atmospheres: $\log p = A + BT^{-1} + C \log T + DT^{-3,}$ where T = °K

Table C(b): Vapor Pressure of the Metallic Elements[16]

Element, state	A	B	C	D	Temperature Range (°C)	Log P	apor Pressure P_i^o, atm
Pu, sol	26.16	-19162	-6.6675		298 - 600	-17.88182249	1.313E-18
Pu, sol	18.858	-18460	-4.472		500 - m.p.	-17.93466553	1.162E-18
Np, sol	19.643	-24886	-3.9991		298 - m.p.	-24.09525875	8.030E-25
Am, sol	11.311	-15059	-1.3449		298 - m.p.	-12.05088826	8.894E-13
Ni, sol	10.557	-22606	-0.8717		298 - m.p.	-21.19952769	6.316E-22
Be, sol							
Cl, sol							
F, sol							

APPENDIX D: ANNUAL EMISSIONS - With and Without Impurities

Table D(a): Total Estimated Annual Dose - Worst Case w/o Impurities

Nuclides	Wt. %	Metals Dose (mrem/yr)	Vitrification Dose (mrem/yr)	Total Dose (mrem/yr)
Np^{237}	**5**	7.849E-24	2.081E-06	2.081E-06
Pu^{238}	2	8.244E-14	7.741E-05	7.741E-05
Pu^{239}	59	9.525E-15	8.943E-06	8.943E-06
Pu^{240}	18	1.059E-14	9.945E-06	9.945E-06
Pu^{241}	1	4.225E-15	3.967E-06	3.967E-06
Pu^{242}	5	4.903E-17	4.604E-08	4.604E-08
Am^{241}	10	7.178E-08	1.816E-03	1.816E-03
Total	100	7.178E-08	1.919E-03	**1.919E-03**

* This produced higher emissions than aged fuel grade, aged production grade, aged weapons grade, or green fuel material (Ref. 28 & 29).

** Facility Operation Assumptions is that each melter will produce 1 can of glass and assumes 24 hour operating day; for conservatism, in this case, it is assumed that each melter will produce 4 batches for a yield of 4 cans per day and that each furnace will operate 24 hours per day.

Table D(b): Total Estimated Annual Emissions - w/Impurities

Nuclides	Metals Amt. (g/yr)	Vitrification Amt. (g/yr)	Total Amt. (g/yr)
Ni	5.510E-15	6.337E-02	6.337E-02
Be	0.000E+00	6.529E-07	6.529E-07
Cl	2.287E+07	1.377E+06	2.425E+07
F	4.522E+04	4.078E+03	4.930E+04

PECMC ANALYSIS

Equipment Type	Number of Each Type Needed	Estimated Duration (weeks)
4100 Ton Crane	1	104
Bulldozer	2	156
Motorgrader	2	156
Dumptruck	7	250
Pan Scraper	2	52
Light plants	8	260
Pressure washer	5	364
Vibratory roller	2	208
Concrete Pump Truck	1	312
B. Air Comp.	3	104
Generator	2	312
Bang Boards	8	BUY
Welding Machine	20	260
Copus Blower	12	BUY
Tail Lift Truck	1	520
Gas Mud Hog	2	208
Cherry Picker (22 ton)	3	250
Water Buffalo	2	312
Ford Wet Tap Machine	8	BUY
Glove Bags	50	BUY
100 Ton Crane	1	300
Power Buggy Walkbehi	4	468
Soil Tamper	4	208
Compressor 451/900	4	413
Backhoe	4	208
Forklift	3	416
Farm Tractor	5	468
Trailer Semi	5	468
Trailer Lowboy	2	52
Truck Lug Loader	2	312
Truck Stake Body	5	260
Truck Tractor	2	260
Loader (Skid Steer)	4	260
Manlifts 60'	4	260
Pneumatic Hammer	2	6
Track Hoe	2	156
Scissor Lift 21-40	8	416

Draft

PLUTONIUM DISPOSITION PROJECT (U)

Project M09A

SCOPE OF WORK

C-SOW-K-00010 Revision 0

for

Structural and Architectural Modifications Outside the PIDAS (U)

Originated by:	Paul R. Gonzalez Paul Gonzalez Architect	Date: 04/11/07
Reviewed by:	Frank Berry Architect	Date: 04.11.07
Approved by:	Ghada Elchoufi C/S/A Lead	Date: 4/11/07
Approved by:	Clayton Holloway Mechanical Lead	Date: 4/11/07
Approved by:	Roderick King Electrical/I&C Lead	Date: 4/11/07
Approved by:	Drew Negus Plant Design Lead	Date: 4-11-07
Approved by:	David Eisele Design Authority	Date: 11 APR 07
Approved by:	John Hammond Construction Lead	Date: 4-12-07
Approved by:	B.C. Patel Project Engineer	Date: 4/12/07

UNCLASSIFIED
DOES NOT CONTAIN UNCLASSIFIED
CONTROLLED NUCLEAR INFORMATION

DC/RO: Ghada Elchoufi
GSE. 4/11/07

Revision Page

Revision	Revision Date	Affected Section	Description of Change
0	4/12/07	N/A	Initial Revision

Table of Contents

Section **Page**

1.0 SCOPE 4
1.1 General Description 4
1.2 Background 4
2.0 ACRONYMS/ABBREVIATIONS 4
3.0 DESCRIPTION OF PHYSICAL WORK 5
3.1 Performance Category and Safety Classification (SC, SS, PS, GS) 5
3.2 Mechanical/Nuclear/Process 5
3.3 Instrumentation and Controls 5
3.4 Electrical 5
3.5 Plant Design 6
3.6 Civil/Structural/Architectural 6
4.0 ASSUMPTIONS 9
4.1 General Assumptions 9
4.2 Specific Assumptions 9
5.0 TECHNOLOGY DEVELOPMENT ISSUES 9
6.0 REFERENCES 9
6.1 Drawing List 9
6.2 Design Input Documents 10
6.3 Applicable SRS & Industry Codes, Guides and Standards 10
6.4 Related Scopes of Work (SOW) 10
6.5 Miscellaneous 11
7.0 ATTACHMENTS 11

1.0 SCOPE

1.1 General Description

This Scope of Work (SOW) describes the structural and architectural modifications that will be performed outside the 105-K Perimeter Intrusion Detection and Assessment System (PIDAS) zone. These modifications include several new structures that will be constructed outside the PIDAS in order to support the Plutonium Vitrification processes within the K-Area Complex (KAC).

1.2 Background

The Office of Environmental Management has approximately 13 metric tons (MT) of plutonium in approximately 21 MT bulk materials without any defined disposition path. The Plutonium Disposition (PUD) Project is critical to meet the Department of Energy's strategic goal of providing a responsible resolution to the permanent disposal of the nation's excess high-level radioactive materials and waste; and to enable the cleanup of Environmental Management (EM) sites.

The Plutonium Vitrification Facility (PDF) will be located at the K-Area Complex to disposition up to approximately 13 MT of EM owned surplus plutonium. The facility will utilize a vitrification process to vitrify plutonium into a lanthanide borosilicate (LaBS) glass matrix. This glass will be packaged into bagless transfer cans and placed inside a Defense Waste Processing Facility (DWPF) type canister. The canister will be transported to DWPF and filled with High Level Waste (HLW) glass. The DWPF canisters will be stored in the Glass Waste Storage Buildings and later transported to the geologic repository at Yucca Mountain.

This SOW has been developed for the purpose of facilitating construction cost and schedule estimates for the Conceptual Design Report (CDR) on the PUD project. The input to this SOW was the approved technical baseline consisting of a Facility Design Description (FDD) and associated System Design Descriptions (SDD). Every attempt has been made to assure alignment and consistency between this SOW and the appropriate sections of the technical baseline, in order to provide accurate estimates. This SOW is not a PUD technical baseline document. A more detailed description of the system can be found in the associated SDD listed in the reference section.

A **HOLD** is placed to identify information that is preliminary in nature, results from a design uncertainty, originates from insufficient documentation, needs verification, or identifies a discrepancy. A **TBD** is placed to identify places in the text where numeric values or descriptive information is not available at the time that the current revision of the SOW is released.

2.0 ACRONYMS/ABBREVIATIONS

ADA	Americans with Disabilities Act
CDR	Conceptual Design Report
DS	Design Services
DWPF	Defense Waste Processing Facility
FDD	Facility Design Description
GS	General Services
HLW	High Level Waste
HVAC	Heating, Ventilation and Air Conditioning
IBC	International Building Code
KAC	K-Area Complex
LaBs	Lanthanide Borosilicate

MC&A	Material Control and Accountability
MT	Metric Tons
NFPA	National Fire Protection Association
PC	Performance Category
PDF	Plutonium Disposition Facility
PIDAS	Perimeter Intrusion Detection and Assessment System
PS	Production Support
PU	Plutonium
PUD	Plutonium Disposition
PuVit	Plutonium Vitrification
SC	Safety Class
SDD	System Design Description
SOW	Scope Of Work
SRS	Savannah River Site
SS	Safety Significant
TBD	To Be Determined

3.0 DESCRIPTION OF PHYSICAL WORK

3.1 Performance Category and Functional Classification (SC, SS, PS, GS)

3.1.1 Performance Category

3.1.1.1 The Performance Categories for the buildings/Structures described in this SOW are as follows:

- Sand Filter Building: PC-3
- Fan House: PC-3
- Exhaust Stack: PC-3
- Chiller Building and Cooling Towers: PC-1
- Modular Office Buildings and Modular Restroom Building: PC-1

3.1.2 Functional Classification

3.1.2.1 The systems in this SOW shall be designed in accordance with the requirements of WSRC Manual WSRC-E7, Conduct of Engineering and Technical Support Procedure 2.25 Rev 14, “Functional Classification”, as follows:

- Sand Filter Building: SC
- Fan House: SC
- Exhaust Stack: SC
- Chiller Building and Cooling Towers: PS
- Modular Office Buildings and Modular Restroom Building: GS

3.2 Mechanical/Nuclear/Process

3.2.1 N/A

3.3 Instrumentation and Controls

3.3.1 N/A

3.4 Electrical

3.4.1 N/A

3.5 Plant Design

3.5.1 N/A

3.6 Civil/Structural/Architectural

3.6.1 The modifications outside the PIDAS include the following new structures:

- Sand Filter Building
- Fan House
- Exhaust Stack
- Chiller Building & Cooling Towers
- Modular Office Buildings and Modular Restroom Building

3.6.2 Sand Filter Building

3.6.2.1 See Reference 6.1.1.1 for the location of the Sand Filter Building. See Reference 6.1.1.3 for a layout of the Sand Filter Building.

3.6.2.2 The Sand Filter Building will be constructed east of the KAC. It will be located on the site of the existing Pump House Building (Bldg. 190-K), which will be demolished and removed.

3.6.2.3 The Sand Filter Building will be a reinforced concrete structure approximately 120' wide x 220' long x 23' high. It will be primarily a subterranean structure with only the top 2 feet extending above grade level. It will have a 4 foot thick base slab, 2 foot thick walls and roof slab, and twenty-one 2'-6" diameter, 17' high cylindrical columns supporting the roof.

3.6.2.4 There will be 16 parallel trenches, 3'-6" wide x 2'-0" deep, running east-west, in the floor between the columns. The trenches will be covered with steel grating.

3.6.2.5 There will be a reinforced concrete access stairwell at both the northwest and south east corners of the building. Each stairwell will have two personnel access doors – one at the roof level, and one at the interior floor level.

3.6.2.6 There will be 10' wide x 6' high air inlet tunnel on the west side, and a 10' wide x 6' high air outlet tunnel on the east side of the Sand Filter Building. The walls of the tunnels will be 2' thick reinforced concrete, and the tunnels will run the full 220' length of the building.

3.6.2.7 Materials for Sand Filter Building

Material	Quantity
excavation	22,535 cu. yds.
reinforced concrete	187,799 cu. ft.
Grating	5,152 sq. ft.
penetration seals	4
single non-rated door	2
single fire rated door	2
steel stairs (20' high)	2
liquid applied roof membrane	26,800 sq. ft.
exterior waterproofing at concrete walls	14,400 sq. ft.
filter media (sand)	16,622 cu. yds.
architectural acrylic coating for concrete floors	400 sq. ft.
architectural acrylic coating for 33' concrete walls	3,960 sq. ft.

3.6.3 Fan House

3.6.3.1 See Reference 6.1.1.1 for the location of the Fan House. See Reference 6.1.1.2 for a layout of the Fan House.

3.6.3.2 The Fan House will be connected to the Sand Filter Building by an underground reinforced concrete tunnel which will enclose the exhaust system from the Sand Filter Building.

3.6.3.3 The Fan House will house the three PuVit exhaust fans, two emergency diesel generators, a below-grade diesel fuel storage tank, and a control room.

3.6.3.4 The Fan House structure will be reinforced concrete approximately 88' wide x 104' long, with a 30' x 36' protrusion on the west side. The building will be 35' high. The exterior walls and roof of the building will be 2' thick.

3.6.3.5 Formed openings will be provided in the concrete walls for the installation of air intake louvers, exhaust fans, and various types of dampers.

3.6.3.6 A system of ceiling hung monorails will be provided for maneuvering the equipment within the building.

3.6.3.7 Roll-up doors will be provided for equipment access into the central corridor, the three fan rooms, the two diesel generator rooms, and the diesel filter room. There will be a total of eight (8) 10' x 10' roll-up doors in the building. All interior roll-up doors will be fire rated.

3.6.3.8 There will be a total of nine (9) 3' x 7' hollow metal personnel access doors, and one (1) 6' x 7' hollow metal double door in the facility. All interior doors will be fire rated.

3.6.3.9 A metal stud and gypsum board partition wall will separate the control room from the central corridor. The partition wall will be 32' long x 35' high, and fire rated.

3.6.3.10 All interior wall and floor surfaces will be coated with an epoxy topcoat for ease of cleaning and maintenance.

3.6.3.11 Materials for Fan House

Material	Quantity
reinforced concrete for Fan House	88,290 cu. ft.
reinforced concrete for substation foundation and dike (mat size 14'X10'X12" & dike size 5' long X 6' wide X 8"high and 8" deep)	150 cu. ft.
insulated EPDM roof	10,232
penetration seals	70
fire rated gypsum board partition walls, 33' high	64 lin. ft.
non-rated gypsum board partition walls, 33' high	24 lin. ft.
single non-rated door	3
single fire rated door	6
double fire rated door	1
fire rated roll-up doors	6
non-rated roll-up doors	2
architectural acrylic coating for concrete floors	10,232 sq. ft.
architectural acrylic coating for 33' concrete walls	34,056 sq. ft.
architectural acrylic coating for 33' gyp. bd walls	5,808 sq. ft.

3.6.4 Exhaust Stack

3.6.4.1 See Reference 6.1.1.1 for the location of the Exhaust Stack

3.6.4.2 The Exhaust Stack will be a maximum of 100' high and 7' in diameter. It will be vendor supplied, and erected on a concrete foundation. The foundation will be of reinforced concrete and will have cast-in-place anchor bolts to receive the steel stack.

3.6.4.3 Materials for Exhaust Stack Structure

Material	Quantity
reinforced concrete foundation	7,560 cu. ft.
stack	1

3.6.5 Chiller Building & Cooling Towers

3.6.5.1 See Reference 6.1.1.1 for the location of the Chiller Building. See Reference 6.1.1.4 for the layout of the Chiller Building and its associated cooling towers.

3.6.5.2 The Chiller Building will be a pre-engineered metal building, 60' x 60' x 30'. It will house the three chilled water pumps that provide cooling water to the plutonium vitrification processes in the K-Area Complex buildings.

3.6.5.3 The metal building will be insulated and ventilated, but not air conditioned. Space heaters will provide heat in cold weather.

3.6.5.4 A 55' x 60' x 2" deep concrete slab will be provided adjacent to the Chiller Building for the three cooling towers and their associated cooling tower pumps.

3.6.5.5 An electrical panel room will be provided in one corner of the building. The gypsum board partition walls that enclose this room will be fire rated.

3.6.5.6 A 3' x 7' fire rated personnel door will be provided for the panel room. A 10' x 10' roll-up door and two insulated 3' x 7' hollow metal personnel doors will be provided in the exterior walls of the Chiller Building.

3.6.5.7 Materials for Chiller Building and Cooling Towers

Material	Quantity
pre-engineered metal bldg. (60' x 60' x 30')	1
reinf. conc. slab for outside equip (55' x 60' x 2')	6,600 cu. ft.

3.6.6 Modular Buildings

3.6.6.1 See Reference 6.1.1.1 for the location of the Modular Buildings. See Attachment 7.1 for a layout of the Modular Buildings.

3.6.6.2 Three (3) standard double-wide modular office buildings will be required to house personnel directly supporting the activities of the Plutonium Vitrification Project. Each modular office building will be approximately 27'-6" x 64', and will have the following features:

- central corridor with exits at each end
- ten (10) offices – nominally 9' x 11'
- one (1) supervisor's office – nominally 10' x 11'
- one (1) conference room – nominally 11' x 15'
- one (1) telecommunications room – nominally 6' x 11'
- heat pump HVAC system for heating and cooling

- o 120 volt AC power receptacles and lighting
- o universal wiring for voice and data telecommunications in each room

Each modular office building will be fully carpeted, and each room will have a door and a window.

3.6.6.3 One (1) modular restroom building will be required for the personnel in the modular office buildings. This building will be approximately 14' x 35', and will have facilities for both men and women. The restroom building will be equipped as follows:

- o heat pump HVAC system for heating and cooling
- o 120 volt AC power receptacles and lighting
- o minimum of two (2) water closets in the men's restroom
- o minimum of two (2) urinals in the men's restroom
- o minimum of three (3) water closets in the women's restroom
- o minimum of two (2) lavatories in each of the men's and women's restrooms
- o toilet partitions for each water closet
- o urinal screens for each urinal
- o wall mirror for each lavatory
- o liquid soap, paper towel, toilet tissue, and seat cover dispensers

Interior wall and floor finishes of the restroom building will be washable. The layout of the restroom building will be handicapped-accessible in accordance with ADA requirements.

3.6.6.4 Materials for Modular Buildings

Material	Quantity
modular office building (27'-6" x 64')	3
modular restroom building (14' x 35')	1

4.0 ASSUMPTIONS

4.1 General Assumptions

4.1.1 The Construction Agency will be the SRS Construction Group for the Sand Filter Building and Fan House. The Stack Structure, the Chiller Building and the Modular Buildings will be subcontracted.

4.2 Specific Assumptions

None

5.0 TECHNOLOGY DEVELOPMENT ISSUES

None

6.0 REFERENCES

6.1 Drawing List

6.1.1 PUD Project Drawings & Sketches

6.1.1.1 SK-DE-SAB-0006, Site Plan / Layout

6.1.1.2 SK-DE-HVAC-0004, Sand Filter and Fan House – Plan at Level 0'-0"

6.1.1.3 SK-DE-HVAC-0009, Sand Filter Building – Plan, Sections, and Details

6.1.1.4 SK-DE-CTW-0001, Cooling Tower Area Arrangement

6.1.2 Existing Savannah River Site (SRS) Drawings

6.1.2.1 W139213, Cooling Water Reservoir Building 186-K – Plan and Sections, Arrangement

6.1.2.2 W139221, Savannah River Plant Cooling Water Pump House – Building 190-K – Plans at Elevation 251.5', 257.5', and 278.75' – Concrete

6.1.2.3 W139251, Cooling Water Pump House – Arrangement, Plan, and Section

6.2 Design Input Documents

The following Facility Design Description and System Design Descriptions are the baseline documents used to develop this SOW.

6.2.1 Facility Design Description

6.2.1.1 G-FDD-K-00001, Rev B "PUV Facility Design Description"

6.2.2 System Design Description

6.2.2.1 X-SYD-K-00004, Rev. B "Plutonium Vitrification Facility Structures and Buildings System"

6.3 Applicable SRS & Industry Codes, Guides and Standards

6.3.1 Industry Codes and Standards

6.3.1.1 IBC, 2006 – International Building Code

6.3.1.2 NFPA 80, 2006 – Standard for Fire Doors and Other Opening Protectives

6.3.1.3 NFPA 101, 2006 – Life Safety Code

6.3.2 SRS Guides & Standards

6.3.2.1 WSRC-TM-95-1, Standard no. 01060, Rev. 8 "SRS Structural Design Criteria"

6.3.2.2 WSRC-TM-95-1, Standard no. 01110, Rev. 5 "SRS Civil Site Design Criteria"

6.3.2.3 WSRC-TM-95-1, Standard no. 01120, Rev. 6 "SRS Fire Protection Design Criteria"

6.3.2.4 WSRC-IM-95-58, Guide no. 03251-G, "Concrete Anchors"

6.3.2.5 WSRC-IM-95-58, Guide no. 09901-G, "Architectural Field Painting"

6.4 Related Scopes of Work (SOW)

6.4.1 C-SOW-K-00009, Structural and Architectural Modifications for the K-Area Complex

6.4.2 E-SOW-K-00017, Electrical Power Supply System

6.4.3 E-SOW-K-00018, Public Address and Telecommunications Systems

6.4.4 J-SOW-K-00002, ICS & MC&A Network

6.4.5 M-SOW-K-00020, Heating, Ventilation and Air Conditioning System

6.4.6 M-SOW-K-00022, Balance of Plant – Water Systems

6.5 Miscellaneous

None

7.0 ATTACHMENTS

7.1 Modular Office Building and Modular Restroom Building – Floor Plans (1 sheet)

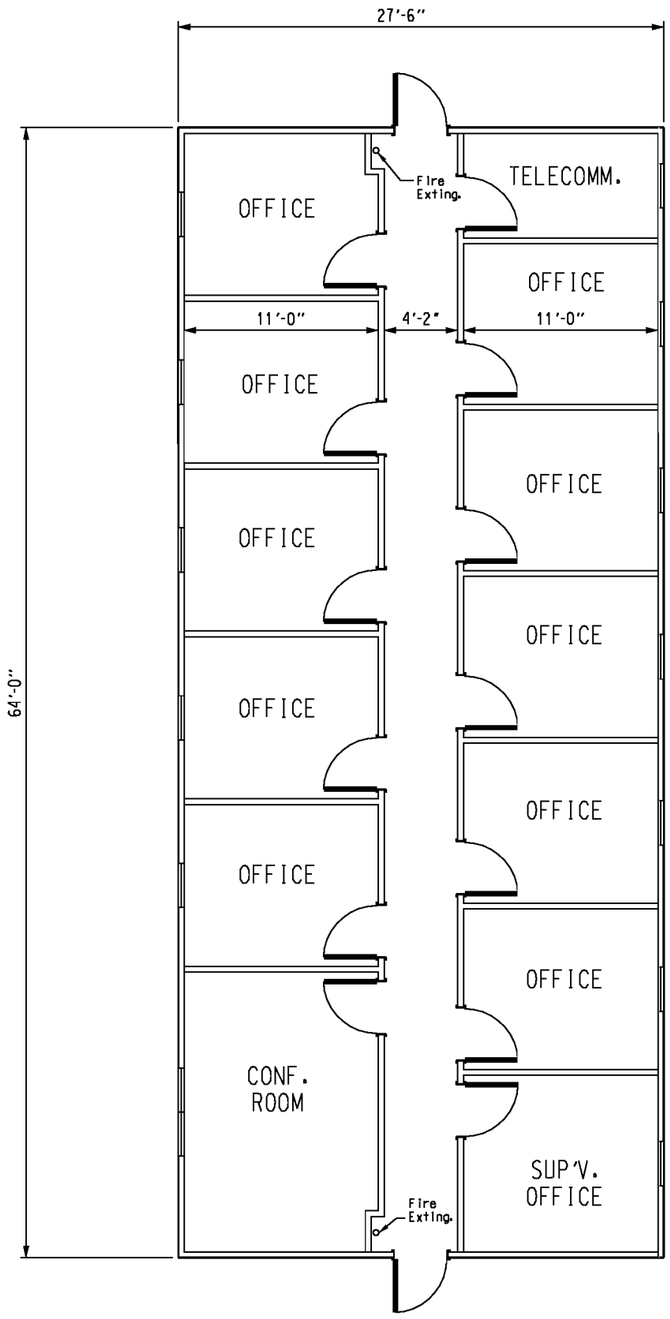

MODULAR OFFICE BUILDING

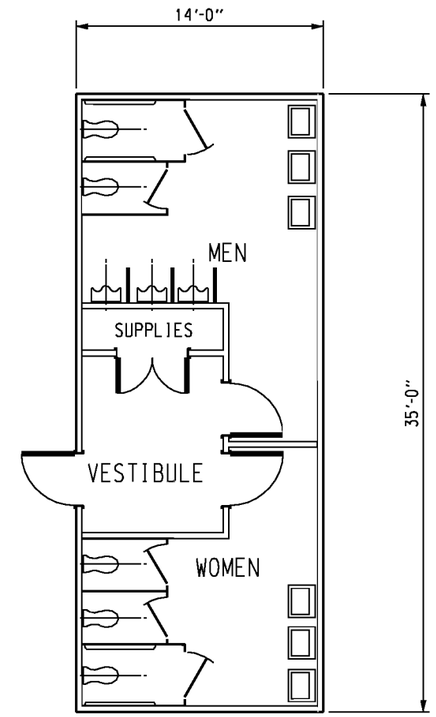

MODULAR RESTROOM BUILDING

C-SOW-K-00010 REV. 0
ATTACHMENT 7.1
PAGE 1 OF 1

PLUTONIUM VITRIFICATION
MODULAR FACILITIES
OUTSIDE THE PIDAS

03-21-07

PLUTONIUM DISPOSITION PROJECT (U)

Project M09A

SCOPE OF WORK

C-SOW-K-00012 Revision 0

for

Site Work (U)

Originated By:	Edward Gajdicar - Civil Engineer	Date:	4/10/07
Reviewed by:	Carlos Chiappetto - Principal Civil Engineer	Date:	4-10-07
Reviewed by:	Clayton Holloway - Mechanical Engineer	Date:	4/10/07
Reviewed by:	Roderick King - Electrical Engineer	Date:	4/12/07
Reviewed by:	Stuart Negus - Plant Design	Date:	4-12-07
Reviewed by:	John Hammond - Construction	Date:	4/12/07
Reviewed by:	Ghada Elchoufi - C/S/A Lead	Date:	4/12/07
Reviewed by:	Bhogilal C. Patel - Project Engineer	Date:	4/12/07
Reviewed by:	David Eisele - Design Authority	Date:	12 APR 07

UNCLASSIFIED
DOES NOT CONTAIN
UNCLASSIFIED CONTROLLED
NUCLEAR INFORMATION
ADC & GSE
Reviewing Official Ghada Elchoufi
(Name and Title)
Date 4/12/07

Revision Page

Revision	Revision Date	Affected Section	Description of Change
0	04/12/07	N/A	Initial Issue

Table of Contents

Section Page #

1.0 SCOPE 4
1.1 General Description of Work....4
1.2 Background....4
2.0 ACRONYMS/ABBREVIATIONS 4
3.0 WORK REQUIREMENTS 5
3.1 Performance Category and Safety Classification (SC, SS, PS, GS) 5
3.2 Permitting Requirements....6
3.3 Investigation of Site Conditions....6
3.4 Erosion Control and Flooding Prevention....6
3.5 Site Preparation 6
3.6 Excavation. 7
3.7 Grading....7
3.8 Backfill and Fill Placement....7
3.9 Access Driveways and Walkways....8
3.10 Storm Drainage... 8
3.11 Sanitary Sewer Service....8
3.12 Potable Water Service … 9
3.13 Electrical Power Service 9
3.14 Seeding....9
4.0 ASSUMPTIONS 10
4.1 General 10
4.2 Specific Assumptions 10
5.0 REFERENCES....10
5.1 Drawings and Sketches....10
5.2 Design Input Documents 11
5.3 Applicable SRS & Industry Codes, Guides and Standards 11
6.4 Related Scopes of Work (SOW) 12
6.0 ATTACHMENTS 12
6.1 Estimate Spreadsheet (Separate Sheet 1 of 1)....12

1.0 SCOPE

1.1 General Description of Work

Provide all labor, equipment, materials and services necessary to execute site work required for the installation of Plutonium Disposition facilities on K-Area. Required site work shall consist of investigation of site conditions, temporary and permanent erosion control, site preparation, excavation and backfill, installation of access walkways, driveways and parking areas, installation of utilities, and final grading and ground cover.

1.2 Background

The Office of Environmental Management has approximately 13 metric tons (MT) of plutonium in approximately 21 MT bulk materials without a defined disposition path. The Plutonium Disposition (PUD) Project is critical to meet the Department of Energy's strategic goal of providing a responsible resolution to the permanent disposal of the nation's excess high level radioactive materials and waste, and to enable the cleanup of Environmental Management sites.

The Plutonium Disposition Facility (PDF) will be located at the K-Area Complex (KAC) to disposition up to approximately 13 MT of Environmental Management (EM) owned surplus plutonium. The facility will utilize a vitrification process to vitrify plutonium into a lanthanide borosilicate (LaBS) glass matrix. The glass will be packaged into bagless transfer cans and placed inside a Defense Waste Processing Facility (DWPF) type canister. The canisters will be transported to DWPF and filled with High Level Waste (HLW) glass. The DWPF canisters will be stored in the Glass Waste Storage Buildings and later transported to the geologic repository at Yucca Mountain.

This Scope of Work (SOW) has been has been developed for the purpose of facilitating construction cost and schedule estimates for the Conceptual

Design Report (CDR) on the PUD project. The input to this SOW was the approved technical baseline consisting of a Facility Design Description (FDD) and associated System Design Descriptions (SDD). Every effort has been made to assure alignment and consistency between this SOW and the appropriate sections of the technical baseline, in order to provide accurate estimates. This SOW is not a PUD technical baseline document. A more detailed description of the system can be found in the associated SDD listed in the reference section.

A HOLD is placed to identify information that is preliminary in nature, results from a design uncertainty, originates from insufficient documentation, needs verification, or identifies a discrepancy. A **TBD** is placed to identify places in the text where numeric values or descriptive information is not available at the time the current revision of the SOW is released.

2.0 ACRONYMS/ABBREVIATIONS

AASHTO	American Association of State Highway and Transportation Officials
ACI	American Concrete Institute
ASTM	American Society for Testing and Materials
BOP	Balance of Plant
BMP	Best Management Practices

CLSM	Controlled Low Strength Material
DA	Design Authority
DMO	Direct Metal Oxidation
DWPF	Defense Waste Processing Facility
ESS	Environmental Services Section
GPR	Ground Penetration Radar
GS	General Services
PC	Permit Custodian
PS	Production Support
PUD	Plutonium Disposition
SC	Safety Class
SCDHEC	South Carolina Department of Health and Environmental Services
SDD	System Design Description
SOW	Scope of Work
SRS	Savannah River Site
SS	Safety Significant
SSC	Structures Systems and Components
TBD	To Be Determined
WSRC	Washington Savannah River Company

3.0 WORK REQUIREMENTS

3.1 Performance Category and Functional Classification (SC, SS, PS, GS)

3.1.1 Performance Category

3.1.2 Functional Classification

3.1.2.1 Backfill under SS and SC structures will be SC.

3.1.2.2 All other backfill and fill will be PS

3.2 Permitting Requirements

3.2.1 Stormwater management and erosion and sediment control permitting for required site work will need to be expedited in accordance with requirements in References 6.3.2.3 and 6.3.2.4.

3.2.2 Stormwater management systems will meet the requirements of South Carolina Regulation 72-300, "Standards for stormwater Management and Sediment Reduction", (Section 3.2.2). The project involves a total land disturbance of at least 1.0 acre and greater and therefore is required to comply with NPDES General Permit No. SCR100000. See Reference 6.3.2.5.

3.3 Investigation of Site Conditions

3.3.1 A site survey will be provided at each work site showing existing natural and manmade conditions.

3.3.2 Drawing review will be provided to verify the site survey.

3.3.3 A geotechnical report will be provided to describe the nature of existing underlying soils and conditions to be disturbed by earthwork.

3.3.4 GPR work will be provided to identify underground utilities wherever excavation is required.

3.3.5 Hand excavation will be provided around electrical utilities.

3.4 Erosion Control and Flooding Prevention

3.4.1 Specific measures will be implemented to control erosion and contain sediment within the bounds of the disturbed work sites. These measures are referred to as BMPs and include use of silt fences and permanent and temporary vegetation.

3.4.2 Specific measures will be implemented to prevent open excavations from being flooded by temporary installations of diversion ditches, sandbag dams and/or sump pumps upstream of work area.

3.4.3 All erosion and sediment control measures will be inspected and documented for proper operation and stability at least once a week and within 24 hours after a ½ inch or greater rainfall event. Provide appropriate documentation recording descriptions of observations on conditions found, along with the required repairs, correctional and maintenance activities that were carried out and accepted by WSRC Environmental Services personnel.

3.5 Site Preparation

3.5.1 The top layer of soil will be stripped in areas to be graded (excavated or filled). Stripping will include removal of the upper 6 inches of soil unless directed otherwise by the engineer.

3.5.2 Topsoil free from subsoil, refuse, organic matter, clay, stones larger than 1.5 inches, course sand, and other deleterious substances will be stockpiled at locations shown on design drawings and reused on disturbed and fine graded areas requiring reseeding.

3.6 Excavation

3.6.1 All excavations will conform to the lines, grades, sections, elevations, and tolerances shown on the drawings. A smooth grade will be maintained to provide positive drainage in the intended direction at all times.

3.6.2 An initial determination will be made regarding the suitability of the excavated soil for use as backfill.

3.6.3 Any excavated soil suitable for reuse will be placed or stockpiled in designated areas.

3.6.4 Excess topsoil and excavated soils unsuitable as backfill material will be disposed of as indicated on design drawings or as directed.

3.6.5 The final 6 inches of excavation beneath a load bearing surface will be made using either equipment with a smooth blade or hand excavation.

3.6.6 Existing structures and utilities adjacent to excavations required to remain in place will be protected and supported to prevent movement. Shoring will be provided as required.

3.6.7 Deep excavations over 5' will be properly tiered with set backs, sloped and/or shored up in accordance with the clearance provided by existing nearby utilities or structures required to remain in place.

3.6.8 Trenching will be provided for a new duct bank extension to the Fan House and earthwork will be provided for two concrete pads required to support electrical sub-station equipment proposed for the Fan House.

3.7 Grading

3.71 Pad elevations for proposed new facilities will be provided. Finished floor elevations will be provided to match existing floor elevations where proposed additions are planned to adjoin to existing buildings. Top of slab or pad elevations, for proposed new facilities which will stand separated, will be established in accordance with proposed new and existing grades and contours to provide permanent positive surrounding drainage conditions.

3.8 Backfill and Fill Placement

3.8.1 Backfill and fill material will be placed under SS and SC structures in workable thickness layers that can be compacted, to a minimum dry density of 95% of maximum dry density determined in accordance with ASTM D698.

3.8.2 Backfill and fill material adjacent to SS and SC structures and under other structures (PS and GS) will be placed and compacted to a minimum dry density of 92% of maximum dry density determined in accordance with ASTM D698.

3.8.3 Backfill and fill material for driveways and parking areas away from structures will be placed and compacted to a minimum dry density of 90% of maximum dry density determined in accordance with ASTM D698.

3.8.4 Areas under excavations to be backfilled and building pad areas to be built up with fill will be maintained in a clean condition free from leaves, litter and other debris

3.9 Access Driveways and Walkways

3.9.1 Temporary gravel surfaced access driveways will be provided where required on the worksites. Gravel surface will be 2" thick crusher run stone delivered from a tested source.

3.9.2 Gravel driveways will be surfaced across full width of driveway over a graded, scarified, compacted and proof rolled subgrade.

3.9.3 Asphalt concrete paved driveways 8' to 16' wide with grassed shoulders will be provided where shown on the drawings. Asphalt pavement material will be delivered to the work sites from a central mixing plant.

3.9.4 Asphalt paved driveways will be composed of 2" of Asphalt Concrete (AC) concrete over a tack coated 2" AC binder course. The AC binder course will be placed over a prime coated compacted 6"aggregate base course which will be placed over a graded, compacted and proof rolled subgrade.

3.9.5 Walkways will be composed of 2" of AC placed over a graded, compacted and proof rolled subgrade.

3.9.6 Fan House: Approximately 300 LF of 16' wide AC paved driveway will be provided.

3.9.7 Low Level Waste Staging Bldg: Approximately 60 LF of 8' wide AC paved driveway will be provided.

3.9.8 Chiller Unit: Approximately 60 LF of 8' wide AC paved surfaced driveway will be provided.

3.9.9 Trailer Offices: Approximately 100 LF of AC paved walkways 4' wide will be provided.

3.10 Storm Drainage

3.10.1 Fan House: An 18" dia. min. RCP culvert pipe 40' long will be provided at two places, one under each of two proposed access driveways.

3.11 Sanitary Sewer Service

3.11.1 Trailer Offices: An underground 4" dia. PVC sanitary sewer drain service line will be required from the proposed new Trailer Offices and tied-in to a to an existing SS service line per BOP SOW. (Reference M-SOW-K-00022)

3.11.2 Restroom/Change Room Addition: A 4" dia. PVC SS service drain line will be required from proposed new restroom and tied-in to a to an existing SS service line per BOP SOW. (Reference M-SOW-K-00022).

3.12 Potable Water Service

3.12.1 Trailers Offices: An underground 1” dia. PVC potable water service line will be provide to the proposed Trailer Offices from a tie-in point at an existing underground potable water line source 200’ to the west or as determined by the mechanical design group.

3.12.2 Restroom/Change Room Addition: An underground 1” dia. PVC potable water service line to proposed Restroom/Change Room Addition will be provided from existing underground potable water pipeline source 40’ to the west or as determined by the mechanical design group.

3.13 Electrical Power Service

3.13.1 Trailer Offices: Provide electrical service for lighting, heating and cooling. Power source will be from existing nearby trailers or as determined by electrical design group.

3.13.2 Fan House and Tunnel/Sand Filter Installation: Provisions for electrical services will be per Electrical SOW (E-SOW-K-00017).

3.13.3 Part of an existing 24” dia. water pipe starting due east from 105-K will be converted into an electrical duct bank for a length of about 220’ where it then turns due north for a length of 60’. From here it will transition to a new 2.5’ W x 1.5’ H duct bank for a length of 180’ which will be trenched out and backfilled to the proposed Fan House location.

3.13.4 New overhead lines will be provided from 152-6K to the Fan House per Electrical SOE (E-SOW-K-00017). Two concrete pads approximately 14’ x 17’ with spill containment dikes will be provided for skid mounted unit sub-stations near the Fan House. See Ref. Dwg. SK-DE-HVAC-0005 Rev B.

3.13.5 Restroom/Changeroom Addition: Provide electrical service for lighting, heating and cooling

3.13.6 Chiller: A new overhead line and underground duct bank sections will be installed to provide 13.8 KV service to a new unit sub-station located within the chiller building per E-SOW-K-00017. Additionally a direct burial conduit will be installed to provide a communication interface between the chiller and 108-1K at the main process building. See Ref. Dwg. SK-DE-HVAC-0005 Rev B.

3.13.7 Administration Support Addition: Provide electrical power service for lighting, heating and cooling per Electrical SOW (E-SOW-K-00017).

3.13.8 Relocation and Removal of Existing Utilities: The attached spread sheet identifies the type and extent of existing utilities such as underground pipelines and duct banks that will interfere with the excavation work required in general and particularly for the Sand Filter Building.

3.13.9 Safeguards and Security: A S & S duct bank will be provided between 701-1K and 701-2K per Safeguards and Security SOW (S-SOW-K-00002).

3.14 Seeding

3.14.1 A minimum of 3” of top soil will be placed over all disturbed and denuded areas that will be provided a permanent grass cover.

3.14.2 Prior to placement of top soil, sloped surfaces will be roughened by creating shallow grooves transversely across the face of the slope.

3.14.3 All areas covered with top soil will be seeded with a grass seed mix compatible with the time of year or season that seeding is scheduled.

3.14.4 Fertilizer and lime will be applied at the time of planting and fertilizer will be applied again after germination.

3.14.5 Straw mulch will be applied within 24 hours after seeding.

3.14.6 Seeded areas will be provided irrigation as required with available rainfall to maintain adequate soil moisture at a depth of I inch.

4.0 ASSUMPTIONS

4.1 General

4.1.1 The Construction Agency will be the SRS Construction Group. DS will provide engineering documentation for the installation of site work improvements and will rely on the use of SRS Guides and Standards.

4.1.2 SRS Construction Group will procure all bulk materials.

4.1.3 SRS Construction Group will procure all manufactured components identified on engineering data sheets that do not require testing or quality documentation.

4.2 Specific Assumptions

4.2.1 Civil/Structural/Architectural

4.2.1.1 It is assumed that site preparation and site improvements will be constructed similar to that shown on drawings identified in drawing C-CT-K-00010 for “2003-2004 DBT Restricted Area (RA) Modifications”.

5.0 REFERENCES

5.1 Drawings and Sketches

5.1.1 PUD Project Drawings & Sketches

5.1.1.1 Site Layout Sketch Number: SK-DE-SAB-0006

5.1.1.2 Electrical Drawing Sketch Number: SK-DE-HVAC-0005

5.1.2 Record Drawings showing DBT site improvements in K-Area designated for installation.

5.1.2.1 C-CT-K-00013, Rev.1- 2003, 2004 Proposed DBT Restricted Area Modifications, Sheet No. 2

5.1.2.2 C-CT-K-00014, Rev.2 - 2003, 2004 Proposed DBT Restricted Area Modifications, Sheet No. 3

5.1.2.3 C-CT-K-00015, Rev.2 - 2003, 2004 Proposed DBT Restricted Area Modifications, Sheet No. 4

5.1.2.4 C-CT-K-00016, Rev.0 - 2003, 2004 Proposed DBT Restricted Area Modifications, Sheet No. 5

5.1.2.5 C-CT-K-00018, Rev.2 - 2003, 2004 Proposed DBT Restricted Area Modifications, Sheet No. 7

5.1.3 Record Documents showing existing utilities around proposed Fan House and Sand Filter Buildings.

5.1.2.1 W142225 Rev. 66, Building 901-K, Underground Water Lines, Detail Piping Plan

5.1.2.2 C-CF-K-0510 Rev. 1, K-Area, Improved Reactor Confinement System, 186 Basin Conduit Duct Bank, Site Clearance and Excavation

5.2 Design Input Documents

5.2.1 Facility Design Description

5.2.2 System Design Description

5.3 Applicable SRS & Industry Codes, Guides and Standards

5.3.1 Industry Codes and Standards

5.3.1.1	ASTM D422	Standard Test Method for Particle-Size Analysis of Soils
5.3.1.2	ASTM D698	Test Method for Laboratory Compaction Characteristics of Soils Using Standard Effort (12,400 ft-lbf/ft^3 (600 kN-m/m^3))
5.3.1.3	ASTM D1556	Standard Test Method for Amount of Material in Soil In-Place by the Sand Cone Method
5.5.1.4	ASTM D1883	Standard Test Effort for CBR (California Bearing Ratio) of Laboratory Compacted Soils

5.3.2 SRS Guides & Standards

5.3.2.1 SRS Procedure No. 1.10, Design Authority, Procedure Manual E7, Conduct of Engineering and Technical Support.

5.3.2.2. SRS Procedure No. 2.25, Functional Classifications, Procedure Manual E7, Conduct of Engineering and Technical Support.

5.3.2.3 WSRC Environmental Compliance (ECM) Manual 3Q, Procedure ECM 12.2, Stormwater Management and Sediment Reduction

5.3.2.4 Manual No. WSRC-IM-91-69, SRS Environmental Permitting, “HOW” Manual.

5.3.2.5 Permit No. SCR100000 – SCDHEC NPDES General Permit for Stormwater Discharge from Construction Activities that are Classified as “Associated with Industrial Activity” by EPA Regulation, Issue Date: January 15, 1998, Expiration Date ?.

5.3.2.6 South Carolina Stormwater Management and Sedimentation Control Handbook for Land Disturbance Activities, SCDHEC.

5.3.2.7 Soil Survey of Savannah River Plant Area, Parts of Aiken, Barnwell, and Allendale Counties, South Carolina, Soil Conservation Service, US Department of Agriculture, June 1990.

5.4 Related Scopes of Work (SOW)

5.4.1 C-SOW-K-00009: Civil/Structural/Architectural Systems – SOW for shielding, furnace module structural design and room arrangements.

5.4.2 E-SOW-K-00017: Electrical SOW for overhead lines to Fan House and Chiller Building.

5.4.3 M-SOW-K-00022: BOP SOW for sanitary sewer, potable water and cooling water pipelines.

5.4.4 S-SOW-K-00002: SOW for Safety and Security.

6.0 ATTACHMENTS

6.1 Estimate Spreadsheet (Sheet 1 of 1)

PLUTONIUM DISPOSITION PROJECT (U) - SITEWORK QUANTITY ESTIMATE

DESCRIPTION	Earthwork											Mud Mat	Seeding		Driveways			Walkways	Utilities					
of	Removals			Strip	Excavate	Backfill	Fill	Export	Fine Grading			6" Thick	4"	Grass	AC		Base	AC	Trench, Excavate and Backfill					
WORK and MATERIAL ►	Grass		D & R	Topsoil	Soil	Soil	Soil	Spoil	Bldg/Rd	Exterior		Concrete	Topsoil	Cover	Pavement		Course	Pavement	Electrical		D & R	Reloc	SD Culvert Pipe	
Material Unit Bases ►	2" Depth		Conc.	3" AC	4" Depth	Bulk	Bulk	Bulk	Bulk	SG	FG Areas	Bldg. SG	Fin. Graded Areas		2" Surface	2" Binder	6" ABC	3" Surface	DBs		Misc. PLs/ DBs		!8"Φ RCP	
Material Units ►	SF	CY	CY	CY	CY	CY	CY	CY	CY	SF	SF	SF	CY	SF	SF	SF	CY	SF	LF	CY	CY	CY	LF	CY
WORK AREA DESCRIPTION▼																								
Fan House Facility-24" Fdn	12,700	80	0	0	240	140	70	0	370	11,500	1,200	11,500	20	1,200								Note (3)		
Driveway 300LF x 16'W + 2(6')W Sh.	9,000	60	60	0	170	0	0	20	160	5,000	4,000	0	50	4,000	5,000	5,000	100	0			NA		80	30
Duct Bank 2.5' W x 1.5' H																			180	330				
																				Note (1)				
Tunnel-17' Dp x 12' Wd	8,600	60	0	0	160	5,200	1,850	0	3,530	5,700	2,950	5,700	40	3,000	0	0	0	0	NA		NA		0	
14'W x 179'L + 30'w x 110'L																								
Sandfilter Facility- 17' Dp	40,400	250	120	0	750	18,000	8,800	0	10,000	28,150	17,500	28,200	200	17,550	0	0	0	0	NA		700(2)	150(4)	0	
(Tiered Excavation & Const. Ramp)																								
Chiller- 18" Fdn	6,240	40	0	0	120	120	25	0	150	5,700	550	5,700	10	550							NA			
Driveway 60 LF x 8'W + (2)4'W Sh.	600	10	0	0	10	0	0	10	0	1,000	600	0	10	600	500	500	10	0					0	
Duct Bank 2.0' W x 1.5' H (assumed)																			220	70				
Restroom/Changeroom-12" Fdn	3,000	20	0	0	40	0	10	0	40	3,000	650	0	10	625	0	0	0	0	NA		NA		0	
LL Waste Staging Bldg -12" Fdn	2,200	20	0	0	40	0	10	0	40	2,200	700	0	10	225	0	0	0		NA		NA			
Driveway 60LF x 8'W + 2(4')W Sh.	600	10	0	0	10	0	0	10	0	1,000	600	0	10	600	500	500	10	0					0	
Employee/Restroom Trailers 24'x48'	0	0	0	0	0	0	0	0	0	1,250	0	0	0	0	0	0	0		NA		NA			
Walkways 200 LF x 4'w	1,000	10	0	0	10	0	0	15	5	0	0		0					400					0	
S & S Duct Bank from 701-1K to 2K																			600	140				
Project Quantities - Totals ►	**84,340**	**560**	**180**	**20**	**1,550**	**23,460**	**10,765**	**35**	**14,290**	**64,500**	**28,750**	**51,100**	**350**	**28,350**	**6,000**	**6,000**	**120**	**400**	**1000**	**540**	**700**	**150**	**80**	**30**
	2 Acres																							

Notes:(1) New DB extension to Fan House Building includes excavation for two new electrical manholes = **330 CY**.

(2) Total additional excavation required for removal of existing utility lines at Sand Filter Building = **700 CY**

a) Remove 20 LF 24" dia. Service Raw Water Pipe 8' Dp @ 2 plcs = 50 CY

b) Remove 10 LF12" dia. Fire Protection Pipe 4' Dp = 10 CY

c) Remove 30 LF 2" dia. & 60 LF 8" dia. Domestic Water Pipe 4' Dp = 30 CY

d) Remove 30 LF 36"W x 12"D Intrusion Detection DB 2' dp = 10Cy

e) Remove 2 Elect. MHs & 240 LF of 24"W x12"H DB 4' Dp = 120 CY

f) Remove 30 LF 42" dia. Cooling Water Pipe 18' Dp @ 2 plcs = 400 CY

g) Remove 8 LF of 9' W x 1.5' Elect. DB 3' Dp stubbed into Bldg 190-K @2 plcs = 20CY

h) Remove 100 LF 16" dia. Storm Drain Pipe & 50 LF 10" dia. SD @ 2 plcs 4' Dp = 60 CY

j) Existing.12' wide DB 3' below grade, 5.5' clear west side of SF Bldg. was not considered for D & R or relocation.

(3) A small network of electrical lines under proposed Fan House footprint which could not be identified from referenced record drawings may require field investigation to clarify field conditions and required work.

(**4**) Relocate and Rebuild 2 Elect. MHs & 260 LF of 24"W x12"H DB 4' Dp to clear SF Facility = **150 CY**

GENERAL: All buried utility lines listed and identified hereon for removal or relocation were determined from available Record Drawings. A small unidentified network of existing buried electrical lines was also found to be within the footprint of the proposed Fan House. All identified and nonidentified utility lines requiring removal and or relocation will require verification in the field prior to any construction activity.

LEGEND	
SF	Square Feet
CY	Cubic Yards
LF	Linear Feet
LL	Low Level
D & R	Demolition & Removal
AC	Asphalt Concrete
PL	Pipe Line
DB	Duct Bank or Direct Burial
NA	Not Applicable

REFERENCE DRAWINGS

W142225 Rev. 66, Bldg. 901-K, Underground Water Lines, Detail Piping Plan

C-CF-K-0510 Rev.1, K-Area, Improved Reactor Confinement System, 186 Basin Coduit Duct Bank, Site Clearance and Excavation

SK-DE-HVAC-0005 Rev. B, 13.8kV Power Plan and Electrical/I & C Services Including Duct Banks for HVAC Fan House and Chiller Plant

PLUTONIUM DISPOSITION PROJECT (U)

Project M09A

SCOPE OF WORK

E-SOW-K-00017 Revision 0

for

Electrical Power Supply System (U)

Originated by: _____ Date: 04/10/07
G. S. Rao
Senior Electrical Engineer

Reviewed by: _____ Date: 4/10/07
Suman C. Shah
Principal Electrical Engineer

Approved by: _____ Date: 4/10/07
Roderick King
Electrical/I&C Lead

Approved by: _____ Date: 4/10/07
Clayton Holloway
Mechanical Lead

Approved by: _____ Date: 4/10/07
Ghada Elchoufi
C/S/A Lead

Approved by: _____ Date: 4-10-07
Drew Negus
Plant Design Lead

Approved by: _____ Date: 4-10-07
John Hammond
Construction/CDI Lead

Approved by: _____ FOR Date: 10APR07
Darrell Raiford
Design Authority

Approved by: _____ Date: 4/10/07
B.C. Patel
Project Engineer

UNCLASSIFIED
DOES NOT CONTAIN UNCLASSIFIED
CONTROLLED NUCLEAR INFORMATION

DC/RO: _____ Date 4/10/07

Revision Page

Revision	Revision Date	Affected Section	Description of Change
0	4/10/07	N/A	Initial Revision

Table of Contents

Section Page

1.0 SCOPE 4
1.1 General Description 4
1.2 Background 4
2.0 ACRONYMS/ABBREVIATIONS 5
3.0 DESCRIPTION OF PHYSICAL WORK 6
3.1 Performance Category and Functional Classification (SC, SS, PS, GS) 6
3.2 Mechanical/Nuclear/Process 7
3.3 Instrumentation and Controls 7
3.4 Electrical 8
3.5 Plant Design 10
3.6 Civil/Structural/Architectural 10
4.0 ASSUMPTIONS 11
4.1 General Assumptions 11
4.2 Specific Assumptions 11
5.0 Technology Development Issues 12
6.0 REFERENCES 12
6.1 Drawing List 12
6.2 Design Input Documents 13
6.3 Applicable SRS & Industry Codes, Guides and Standards 13
6.4 Related Scopes of Work (SOW) 14
6.5 Miscellaneous 14
7.0 ATTACHMENTS 14
7.1 Attachment 1, Bulk Material List (12 Pages) 14
7.2 Attachment 2, Bulk Material List (1 Page) 14

1.0 SCOPE

1.1 General Description

This Scope of Work (SOW) covers the Electrical Power Distribution Systems for the Plutonium Disposition Project. This document categorizes the Electrical Power Distribution System into three primary groups, 1) 13.8 KV Distribution, 2) 480V and Below Normal Distribution and 3) 480V and Below Backup Distribution 4) Lighting and general 120V power receptacle distribution which will be estimated on a per square foot bases. This scope will detail project work within the following areas:

- Process area electrical distribution system inside KAC building which includes 2) 480V and Below normal power distribution from four (4) – 1500 kVA existing transformers located in four transformer rooms at 0' level and 3) 480V and Below backup power distribution.
- Chiller building will have 1) 13.8 KV feeders from and 151-1K and 2) New double ended substation with 480V and below normal distribution
- Fan House building will have 1) 13.8 KV feeders from and 151-1K, 2) New double ended substation with 480V and below normal distribution and 3) SC class 480V and below distribution
- 4) for all above three lighting and 120V power receptacle distribution

1.2 Background

The Office of Environmental Management has approximately 13 metric tons (MT) of plutonium in approximately 21 MT bulk materials without any defined disposition path. The Plutonium Disposition (PUD) Project is critical to meet the Department of Energy's strategic goal of providing a responsible resolution to the permanent disposal of the nation's excess high-level radioactive materials and waste; and to enable the cleanup of Environmental Management sites.

The Plutonium Disposition Facility (PDF) will be located at the K-Area Complex (KAC) to disposition up to approximately 13 Metric Tons (MT) of Environmental Management (EM) owned surplus plutonium. The facility will utilize a vitrification process to vitrify plutonium into a lanthanide borosilicate (LaBS) glass matrix. This glass will be packaged into bagless transfer cans and placed inside a Defense Waste Processing Facility (DWPF) type canister. The canister will be transported to DWPF and filled with High Level Waste (HLW) glass. The DWPF canisters will be stored in the Glass Waste Storage Buildings and later transported to the geologic repository at Yucca Mountain.

This Scope of Work (SOW) has been developed for the purpose of facilitating **construction** cost and schedule estimates for the Conceptual Design Report (CDR) on the PUD project. The input to this SOW was the approved technical baseline consisting of a Facility Design Description (FDD) and associated System Design Descriptions (SDD). Every intent has been made to assure alignment and consistency between this SOW and the appropriate sections of the technical baseline, in order to provide accurate estimates. This SOW is not a PUD technical baseline document. A more detailed description of the system can be found in the associated SDD listed in the reference section.

A HOLD is placed to identify information that is preliminary in nature, results from a design uncertainty, originates from insufficient documentation, needs verification, or identifies a discrepancy. A **TBD** is placed to identify places in the text where numeric values or descriptive information is not available at the time that the current revision of the SOW is released.

2.0 ACRONYMS/ABBREVIATIONS

AC	Alternating Current
ATS	Automatic Transfer Switch
AWG	American Wire Gauge
BB	Building Block
CCTV	Closed Circuit Television
CDIN	Classified Distributive Information Network
D&R	Demolition and Removal
DCS	Distributed Control System
DMO	Direct Metal Oxidation
DOT	Department of Transportation
DS	Design Services
ECF	Entry Control Facility
EMT	Electrical Metallic Conduit
E3S	Electronic Safeguards and Security System
GS	General Services
HEPA	High-Efficiency Particulate Air (filter)
HUFP	Hanford Unirradiated Fuel Package
HVAC	Heating, Ventilation and Air Conditioning
IA	Implementing Agency
IDENT-69G	Hanford Fuel Pin Canister
IEEE	Institute of Electrical and Electronic Engineers
IES	Illuminating Engineering Society
IMC	Intermediate Metallic Conduit
KAC	K-Area Complex
LLW	Low Level Waste
MC&A	Material Control and Accountability
MCC	Motor Control Center
NMC	Neutron Multiplicity Counter
MPC&A	Material Protection Control and Accountability
MRS	Material Receipt System
MT	Modification Traveler
MTS	Manual Transfer Switch
NFPA	National Fire Protection Association
PA	Public Announcement Systemr
PC	Performance Category
PC&S	Process and Control Services Department
PIDAS	Perimeter Intrusion Detection and Assessment System
PU	Plutonium
PUD	Plutonium Disposition
PuVit	Plutonium Vitrification
RGS	Rigid Galvanized Steel
SC	Safety Class
SDD	System Design Description
SOW	Scope of Work

SRID	Safeguards and Security Requirements Identification Document
SRS	Savannah River Site
S&S	Safeguards & Security
SS	Safety Significant
SSC	Structure, System, Component
TBD	To Be Determined
TID	Tamper Indicating Device
UCNI	Unclassified Controlled Nuclear Information
UNO	Unless Noted Otherwise
UPS	Uninterruptible Power Supply
WBS	Work Breakdown Structure
WSRC	Washington Savannah River Company

3.0 DESCRIPTION OF PHYSICAL WORK

3.1 Performance Category and Functional Classification (SC, SS, PS, GS)

3.1.1 Performance Category

3.1.1.1 Provide Electrical Power Distribution System with Performance Category as follows:

- Normal Electrical Power, Production Support (PS), PC-2 construction
- Emergency Electrical Power, Safety Class (SC), PC-3 construction
- Standby Electrical Power, Safety Significant (SS), PC-2 construction
- Uninterruptible Electrical Power, Safety Significant (SS), PC-2 construction

Refer to E-SYD-K-00001 Section1, Table 1-1 for Electrical System performance categories.

3.1.2 Functional Classification

3.1.2.1 The systems in this SOW shall be designed in accordance with the requirements of WSRC Manual WSRC-E7, Conduct of Engineering and Technical Support Procedure 2.25 Rev 14, “Functional Classification”, as follows:

A. Process Area electrical power distribution system

1. Functional Classification – Production Support (PS), PC-2 construction
2. Function Classification – Safety Significant (SS), PC-2 construction for power distribution equipment serving critical and/or safety related equipment located within KAC.

B. Chiller Building

Functional Classification – Production Support (PS), PC-2 construction

C. Fan House Building

Functional Classification - Safety Class (SC), PC-3 construction except for 13.8KV overhead line, Unit Substations and 480V Busduct from unit substations to switchgear inside the building as (PS), PC-2 construction

3.2 Mechanical/Nuclear/Process

3.2.1 Process Building

No Input

3.2.2 Chiller Building

No Input

3.2.3 Fan House Building

Provide a 12,000 gallon diesel fuel tank (M-DS-K-00161)for the two SC class diesel generators including two (2) transfer pumps. Diesel Fuel transfer pumps control system is configured to automatically supply up to seven days reserve power following loss of normal facility power.

3.3 Instrumentation and Controls

No new (construction purchased) instruments are anticipated for installation within the scope area. However instrumentation provided as part of vendor packages (skids) for SS Diesel Generator, Unit Substation and UPS equipment will require checkout and/or calibrations. Additionally it will be responsibility of installer to install necessary signal wiring for interconnection of vendor supplied components associated with Unit Substation, D/G and/or UPS equipment. For instrumentation/signal wiring SOW quantities refer to attachment. Typical instrumentation includes (pressure, level, temp, voltage, current, power & frequency monitoring instrumentations).

3.3.1 Process Building

Process building has Diesel Generator, Various BOP Skids, UPS and Switchgear.

- Diesel Generator Control Panel (various monitoring and control signals)
- BOP System Skids (status signals)
- UPS (various monitoring and status signals)

3.3.2 Chiller Building

Chiller building has instrumentation provided with double ended substation

- Transformer Status Panel (temp., oil pressure etc.)
- Various power monitors (voltage, freq., current etc.)

3.3.3 Fan House Building

Fan House Building has instrumentation provided with unit substations, Diesel Generators, Switchgears, Batteries, Fuel Tank. All instrumentation involved with Fan House building except got unit substations are safety class (SC).

- Diesel Generator Control Panel (temp., oil pressure etc.)
- Battery Racks (Status signals)
- UPS (various monitoring and status signals)
- Unit Substations (transformer, breaker condition signals)

3.4 Electrical

There are three independent electrical power distribution systems as per General Description 1.1.:

3.4.1 Process area Electrical Power Distribution System from Existing four (4) – 1500 kVA transformers located in Transformers rooms at 0' level in KAC. See reference drawings E-E2-K-02225, E-E2-K-02226, E-E2-K-2229, E-E2-K-02230, E-E2-K-02232, E-E2-K-02233, E-E2-K-02240 and E-E2-K-02244. This Power Distribution System also includes Safety Significant (SS) class of backup power for the process area.

3.4.1.1 13.8KV Power Distribution:

- Replace existing 1500 kVA, 13.8KV-480V, Dry type transformer in transformer room #3 as shown on drawing E-E2-K-02232. See data sheet E-DS-K-00056.

3.4.1.2 480V and Below Power Distribution:

- Modify existing motor control center MCC-22E located in purification wing to provide new power distribution as shown on drawing E-E2-K-02226 for magazine loading and storage area.
- Provide total of five (5) motor control centers for the process area as shown on referenced single line drawings and layout sketches. Provide power feeders from existing transformer rooms located on 0' level and as included in bulk material list. Provide five new power breakers 1600AF/800AT for the new feeders in existing switchgears at 0' level
- Provide following 480-120/208V, 3-ph. power transformers in process area for 120/208V power requirements:
  4 each 30 kVA, PS Class
  2 each 45 kVA, PS Class
- Provide following power panels in process area for power distribution for process equipment power requirements
  1 each 225A, 480V, 3-ph. panel, PS Class
  5 each 225A, 120/208V, 3-ph. panels, PS Class
  4 each 100A, PS Class
- Provide power and signal cable tray system as shown on layout sketches SK-DE-BOP-0007, SK-DE-BOP-0008, SK-DE-BOP-0009, SK-DE-BOP-0010
- Provide power and signal cable tray system as shown on layout sketches SK-DE-BOP-0007, SK-DE-BOP-0008, SK-DE-BOP-0009, SK-DE-BOP-0010

3.4.1.3 480V and Below Back up Power Distribution:

- Provide motor control center for standby backup & UPS power system Safety Significant (SS) class. Provide power feeder from existing transformer room located on 0' level and as included in bulk material list. Provide one new power breakers 1600AF/800AT for the new feeder in existing switchgears at 0' level.
- Provide following 480-120/208V, 3-ph. power transformers in process area for 120/208V power requirements
  1 each 30 kVA, SS Class
  1 each 45 kVA, SS Class
  2 each 75 kVA, SS Class
- Provide following power panels in process area for power distribution for process equipment power requirements
  2 each 400A, 120/208V, 3-ph. panels, SS Class
  4 each 225A, 120/208V, 3-ph. panels, SS Class
- Provide new 250KW, 480V, 3-ph. diesel generator with day tank, Automatic transfer switch, manual transfer switch and isolation switch for SS Class backup power system as shown on E-E2-K-02240

3.4.1.4 Lighting and General Purpose Receptacles:
Provide normal & emergency lighting including exit light fixtures for the process and utility area. The lighting shall be in accordance with IES recommendations for total of 103,000 square ft. Scope includes all branch circuits, local lighting panels and transformers feed from existing MCC and Distribution panels. Provide 120V convenience duplex receptacles and grounding pigtails for the entire area on same square feet base.

3.4.2 Chiller Building Electrical Power Distribution System:

3.4.2.1 13.8KV Power Distribution:
Provide 2 each 1200A, 15KV, power breakers in 151-1K switchgear for two new feeders for the chiller plant
Provide two new 13.8KV feeders as shown on SK-DE-HVAC-0005
Provide new double ended unit substation ELNH-USS-001C as shown on E-E2-K-02234 and specified in equipment data sheets E-DS-K-00041

3.4.2.2 480V and Below Power Distribution:
Provide new motor control centers ELNH-MCC-001 & ELNH-MCC-002 as shown on E-E2-K-02234 and specified in equipment data sheets E-DS-K-00040
Provide Cable Tray and raceways as shown on layout sketch for chiller building
Provide direct buried 3” RGS conduit with signal and PA cables from the chiller building to KAC main process building. Run direct buried conduit along the new chilled water lines

3.4.2.3 Lighting and General Purpose Receptacles:
Provide normal & emergency lighting including exit light fixtures for the chiller building and cooling tower. The lighting shall be in accordance with IES recommendations. Total area to be considered is approximately 2500 sq. ft. Provide 120V convenience duplex receptacles and grounding pigtails for the entire area on same square feet base.

3.4.3 Fan House Electrical Power Distribution System:

3.4.3.1 13.8KV Power Distribution:
Extend existing 13.8KV overhead lines in K-Area to new substations for fan house building power. See SK-DE-HVAC-0005
Provide new unit substations ELNA-USS-001 & ELNA-USS-002 outside fan house building. These substations and bus ducts connected to switchgears ELNH-SWGR-001 & ELNH-SWGR-002 are PS/GS. See data sheets E-DS-K-00027 and E-DS-K-00028

3.4.3.2 480V and Below Safety Class (SC) Emergency Power Distribution:
Provide following Safety Class emergency power distribution equipment part of fan house building power distribution system. See SK-DE-HVAC-0006

Electrical distribution system installed under this section shall meet two train IEEE 384 requirement.

- ELNH-SWGR-001
- ELNH-SWGR-002
- ELNH-SWGR-003
- ELNH-MCC-001 See E-DS-K-00030

- ELNH-MCC-002 See E-DS-K-00030
- ELNH-MCC-003 See E-DS-K-00031
- EEP-SWGR-001 See E-DS-K-00029
- EEP-SWGR-002 See E-DS-K-00029
- EEP-DG-001 Diesel Generator with control cabinet, day tank, battery chargers and all accessories See E-DS-K-00038
- EEP-DG-002 Diesel Generator with control cabinet, day tank, battery chargers and all accessories See E-DS-K-00038
- 3 each 20 kVA UPS units ELNH-UPS-001, 002 & 003. See E-DS-K-00036 & See E-DS-K-00037
- 1 each 45 kVA, 480-120/208V transformer
- 1 each 225A, 120/208V panel
- 3 each 15 kVA, 125VDC battery systems & chargers
- 2 each 5HP diesel supply pump power
- BUS DUCT as shown on SK-DE-HVAC-0008 and data sheets E-DS-K-00032, 00033, 00034 and 00035
- Provide cables and raceways from fan house building to main KAC building controls and power as shown on sketch SK-DE-HVAV-0005

3.4.3.3 Lighting and General Purpose Receptacle:
Provide normal & emergency lighting including exit light fixtures for the fan house building approximately 9,000 sq. ft. The lighting shall be in accordance with IES recommendations. Provide 120V convenience duplex receptacles and grounding pigtails for the entire area on same square feet base.

3.5 Plant Design

Not Applicable.

3.6 Civil/Structural/Architectural

3.6.1 The C/S/A scope of work required for installation of supports for the major components of Electrical Power Supply Systems is as follows.

3.6.2 Motor control centers [6]:
The weight of each Motor control Center is approximately 1500 lbs. Each unit will be provided with the bolt holes for mounting. Each unit will be supported by a steel frame made of 4”X4”X1/2” angles and anchored with ½” Dia. bolts to the concrete floor at -20 Level. Follow the manufacturer’s recommendations for the support details.

3.6.3 Power Transformers [10]:
The weight of each Power Transformer is approximately 400 lbs. Each unit will be provided with the bolt holes for mounting. Each unit will be supported by a steel frame made of 4”X4”X1/2” angles and anchored with ½” Dia. bolts to the concrete floor at -40 Level. Follow the manufacturer’s recommendations for the support details.

3.6.4 Panels [16]:
The weight of each Panel is approximately 200 lbs. It will be provided with the bolt holes for mounting Panel. Each panel will be supported by a steel frame made of P 1000 Unistruts and anchored with ½ ” Diameter bolts to the wall. Follow the manufacturer’s recommendations for the support details.

3.6.5 All equipments in Chiller Building Electric Power Distribution System:
Follow the manufacturer's recommendations for the support details.

3.6.6 All equipments in Fan House Electric Power Distribution System:
Follow the manufacturer's recommendations for the support details.

4.0 ASSUMPTIONS

4.1 General Assumptions

4.1.1 The Construction Agency will be the SRS Construction Group. DS will provide engineering documentation for the installation of this equipment and will rely on the use of SRS Guides and Standards.

4.1.2 SRS Construction Group will procure all bulk materials.

4.1.3 SRS Construction Group will procure all off-the-shelf components and equipment identified on engineering data sheets that do not require testing or quality documentation.

4.1.4 All conduits will be IMC or RGS except for under ground or encased in concrete.

4.2 Specific Assumptions

4.2.1 Mechanical

4.2.1.1 No specific assumptions have been made in this group.

4.2.2 Instrumentation and Controls

4.2.2.1 No specific assumptions have been made in this group.

4.2.3 Electrical

4.2.3.1 Existing four (3) 1500 kVA transformers in KAC will be utilized to supply power feeds to process and support loads in KAC building. 1500 kVA transformer #3 in transformer room #3 will be replaced.

4.2.3.2 Adequate spare capacity is available at 151-1K to support addition of new loads for Chiller and Fan House buildings.

4.2.3.3 Existing 13.8KV Over Head lines have adequate spare capacity and will be extended to provide power to Fan House building.

4.2.3.4 During conceptual design phase Lighting & receptacle cost estimate will be based upon a per square foot estimated value. Similarly Lightning Protection cost for the new structures will be estimated based upon building & overall size.

4.2.3.5 No lightning protection related modifications are necessary for the main KAC process building.

4.2.3.6 Existing building ground grid serving main KAC is adequate to support project related work. Scope only includes installation of new grounding pigtails for equipment/skids.

4.2.3.7 Conduit run between main KAC building and Chiller building will be direct buried (i.e. no concrete encasement required). The 3" conduit shall run inside pipe sleeve by core boring installed beneath PIDAS.

4.2.4 Plant Design

4.2.4.1 No specific assumptions have been made in this group.

4.2.5 Civil/Structural/Architectural

4.2.5.1 Core drills will be required for routing commodities through existing walls or floors, which is covered in C-SOW-K-00009.

4.2.4.2 Assume all anchor bolts used for equipment and commodity supports will be A36 Drillco Maxi bolts. Alternatively, Hilti Kwik Bolts -TZ are acceptable for anchoring items.

4.2.4.3 Any components inside any equipment like Panels etc. are the integral parts of that equipment as one unit.

4.2.4.4 Functional Classification for drilling holes in concrete surface is SC.

4.2.4.5 Bulk materials other than Listed will be required for the equipments used in the Chiller Building and Fan House Electric Power Distribution Systems. [Due to insufficient data the quantity for Bulk material can not be estimated.] However, follow the manufacturer's recommendations for the support details.

5.0 Technology Development Issues

There are currently no technology issues for the Electrical systems.

6.0 REFERENCES

6.1 Drawing List

6.1.1 PUD Project Drawings & Sketches

6.1.1.1 E-E2-K-02225, Motor Control Center ELNH-MCC-31E – Single Line Diagram
6.1.1.2 E-E2-K-02226, Magazine Loading and Storage – Single Line Diagram
6.1.1.3 E-E2-K-02229, Motor Control Center ELNH-MCC-24M – Single Line Diagram
6.1.1.4 E-E2-K-02230, Motor Control Center ELNH-MCC-31M – Single Line Diagram
6.1.1.5 E-E2-K-02232, Motor Control Center ELNH-MCC-11M – Single Line Diagram
6.1.1.6 E-E2-K-02233, Motor Control Center ELNH-MCC-18M – Single Line Diagram
6.1.1.7 E-E2-K-02234, Central Chilled Water Plant Unit Substation – Single Line Diagram
6.1.1.8 E-E2-K-02235, Central Chilled Water Plant, 480V Motor Control Centers – Single Line Diagram
6.1.1.9 E-E9-K-02190, Chiller Building – Power Plan
6.1.1.10 SK-DE-BOP-0007, 0008, 0009 & 0010, Power and I&C Cable Tray Layout Plans
6.1.1.11 SK-DE-HVAC-0005, Electrical/I&C Services
6.1.1.12 SK-DE-HVAC-0006, 0007 & 0008, Fan House Electrical Layouts
6.1.1.13 SK-DE-BOP-0004 thru 0006 and 0011 thru 0016, -20' and -40' level Electrical and I&C Equipment Layout
6.1.1.14 E-DS-K-00026 thru 00057 Electrical Equipment Data Sheets

6.1.2 Existing Savannah River Site (SRS) Drawings

6.1.2.1 W2021983, Electrical Supply System for 100-K Area Single Line Diagram
6.1.2.2 W811418, W825663, W825664, W825665 and W825666 480V Swgr.-Single Line Diagrams

6.2 Design Input Documents

The following Facility Design Description and System Design Descriptions are the baseline documents used to develop this SOW.

6.2.1 Facility Design Description

6.2.1.1 G-FDD-K-00001, Rev B "PUV Facility Design Description"

6.2.2 System Design Description

6.2.2.1 E-SYD-K-00001, Rev. C "Electrical Power & Distribution System (ED) SDD"

6.3 Applicable SRS & Industry Codes, Guides and Standards

6.3.1 Industry Codes and Standards

6.3.1.1 IEEE std. 765-1995 – Preferred Power Supply (PPS) for Nuclear Generating Stations
6.3.1.2 IEEE std. 323-2003 – Qualifying Class 1E Equipment for Nuclear Power Generating Stations
6.3.1.3 IEEE std. 344-2004 – Seismic Qualification of Class 1E Equipment for Nuclear Power Generating Stations
6.3.1.4 IEEE std. 384-1998 – Standard Criteria for Class 1E Equipment and Circuits
6.3.1.5 NFPA 70, 2005 – National Electrical Code

See Functional Design Description and System Design Descriptions References 2.2.1.1, 2.2.2.1, 2.2.2.2, and 2.2.2.3 for more codes and standards.

6.3.2 SRS Guides & Standards

6.3.2.1 SRSESM 15980-03-R, Mechanical Installation of General and Nuclear Services Instrumentation
6.3.2.2 SRSESM 16051-G-02 Installation of Electrical Raceway Systems and Cable Trays
6.3.2.3 SRSESM 16052-G-03 Installation of Electrical Wires, Cables and Termination
6.3.2.4 SRSESM 16053-G-02 Installation of Electrical Equipment
6.3.2.5 SRSESM 16054-G-02 Installation of Electrical Heat Tracing and Freeze Protection
6.3.2.6 SRSESM 16055-G-02 Installation of Lighting and Communication Systems
6.3.2.7 SRSESM 16056-G-02 Installation of Grounding Systems
6.3.2.8 SRSESM 16057-G-02 Installation of Cathodic Protection Systems

6.4 Related Scopes of Work (SOW)

6.4.1 C-SOW-K-00009, Structural & Architectural Modifications for the K-Area Complex

6.4.2 C-SOW-K-00010, Structural & Architectural Modifications for outside the PIDAS

6.4.3 M-SOW-K-00020, Heating Ventilating and Air Conditioning (HVAC) Systems

6.4.4 M-SOW-K-00021, Balance of Plant – Compressed Gas Systems

6.4.5 M-SOW-K-00022, Balance of Plant – Water System

6.4.6 J-SOW-K-00002, ICS and MC&A Network

6.5 Miscellaneous

6.5.1 M&O-PUD-2006-00078, Preliminary HVAC Elect. Substation Sizing Requirement
6.5.2 M&O-PUD-2007-00006, Safety Class Single Line Diagram Assumptions & Equipment Sizing Calculations
6.5.3 M&O-PUD-2007-00007, Preliminary UPS & Backup Power Diesel Generator Sizing Requirement

7.0 ATTACHMENTS

7.1 Attachment 1, Bulk Material List (12 Pages)
7.2 Attachment 2, Bulk Material List (1 Page)

ATTACHMENT No. _1__
(Bulk Material Summary)

Scope Set: ELECTRICAL

Date: 4/10/2007

Prepared By: [illegible]

Reviewed By: S. C. Shah

Exterior Glovebox Cables

Sum of Qty XGB (ft)	
Ext. Cable Size/Type	Total
#4 soft drawn copper	200
500 kcmil	2,340
(blank)	
#4/0	780
5/C #2	850
4/C #6	150
2-pair #18 Shild.	1,000
Grand Total	5,320

Interior Glovebox Cables

Sum of Qty NGB (ft)	
GB Cable Size/Type	Total
(blank)	
Grand Total	

All Raceway Types

Sum of Qty Rcwy (ft)	
RCWY	Total
n/a	0
(blank)	
3" IMC	720
1 1/2 "	360
3/4" IMC	1,000
Grand Total	2,080

All Raceway Types Grouped by Red Designation

Sum of Qty Rcwy (ft)		
Red	RCWY	Total
(blank)	(blank)	
Grand Total		

KAC - ELECTRICAL RM. #1

ATTACHMENT No. _1_
(Bulk Material Backup Data)

Description: KAC Pu Disposition Facility Bulk Materials, Cable and Conduit
Electrical Equip Room #1

Reference: E-E2-K-02225 R/C Feed Prep and Oxidation Area MCC-31E Single Line
E-E2-K-02229 R/D Milling/Mixing and Vitrification MCC-24M Single Line
E-E2-K-02230 R/D Milling/Mixing and Vitrification MCC-31M Single Line

Item #	From Equipment	To Equipment	Cable Estimates (Exterior GB)			Shared Rcwy/Tray	Raceway Estimates				
			XGB Length (A) (ft)	Qty (A)	Cable size/description	Length (C) (ft)	Length (D) (ft)	Qty (D)	Size/Desc. (D)	Red	Notes/Comments
1	Transformer Rm #2 Swgr	ELNH-MCC-24M	120	6	500 kcmil	0	100	2	3" IMC	N	
2	Transformer Rm #2 Swgr	ELNH-MCC-24M	120	2	#4/0	100	0	2	n/a	N	grounds
3	ELNH-MCC-24M	ELNH-XFMR-016	20	1	4/C #6	0	15	1	1 1/2 "	N	
4	ELNH-XFMR-016	ELLV-PNL-009	300	1	5/C #2	220	70	1	1 1/2 "	N	
5	Transformer Rm #3 Swgr	ELNH-MCC-31M	270	6	500 kcmil	0	260	2	3" IMC	N	
6	Transformer Rm #3 Swgr	ELNH-MCC-31M	270	2	#4/0	260	0	2	n/a	N	grounds
7	ELNH-MCC-31M	ELNH-XFMR-017	20	1	4/C #6	0	15	1	1 1/2 "		
8	ELNH-XFMR-017	ELLV-PNL-010	300	1	5/C #2	220	70	1	1 1/2 "		
9	Transformer Rm #3 Swgr	ELNH-MCC-31E	270	6	500 kcmil	0	260	2	3" IMC	N	
10	Transformer Rm #3 Swgr	ELNH-MCC-31E	270	2	#4/0	260	0	2	n/a	N	
11	ELNH-MCC-31E	ELNH-XFMR-006	50	1	4/C #6	0	45	1	1 1/2 "	N	
12	ELNH-XFMR-006	ELLV-PNL-007	200	1	5/C #2	125	65	1	1 1/2 "	N	
13	DCS-CAB	Elect. Equip.	1000	1	2-pair #18 Shild.	1000	1000	1	3/4" IMC	N	
14	ELNH-MCC-31E	ELNH-XFMR-007	50	1	4/C #6	0	45	1	1 1/2 "	N	
15	ELNH-XFMR-007	ELLV-PNL-008	200	1	5/C #2	125	65	1	1 1/2 "	N	
16	ELNH-MCC-31E	ELNH-XFMR-004	50	1	4/C #6	0	45	1	1 1/2 "	N	
17	ELNH-XFMR-004	ELLV-PNL-004	150	1	5/C #2	125	25	1	1 1/2 "	N	
18	Equipment	Ground grid	200	1	#4 soft drawn copper	0	0	0	n/a	N	grounds for equipment

ATTACHMENT No. _1_
(Bulk Material Summary)

Scope Set: ELECTRICAL

Date: 4/10/2007

Prepared By: [illegible]

Reviewed By: [illegible]

Exterior Glovebox Cables

Sum of Qty XGB (ft)	
Ext. Cable Size/Type	Total
#4 soft drawn copper	60
500 kcmil	2,400
#4/0	800
4/C #6	50
5/C #2	40
2-pait #18 Shild.	1,000
Grand Total	4,350

Interior Glovebox Cables

Sum of Qty NGB (ft)	
GB Cable Size/Type	Total
Grand Total	

All Raceway Types

Sum of Qty Rcwy (ft)	
RCWY	Total
3" IMC	760
1 1/2 "	70
3/4" IMC	1,000
Grand Total	1,830

All Raceway Types Grouped by Red Designation

Sum of Qty Rcwy (ft)		
Red	RCWY	Total
Grand Total		

KAC - ELECTRICAL RM. #2

ATTACHMENT No. _1_
(Bulk Material Backup Data)

Description: KAC Pu Disposition Facility Bulk Materials, Cable and Conduit
Electrical Equip Room #2
Reference: E-E2-K-02233 R/C Motor Control Center Single Line MCC-18M
E-E2-K-02244 R/A Motor Control Center Single Line MCC-24E

Item #	From Equipment	To Equipment	Cable Estimates (Exterior GB)			Shared Rcwy/Tray	Raceway Estimates				
			XGB Length (A) (ft)	Qty (A)	Cable size/description	Length (C) (ft)	Length (D) (ft)	Qty (D)	Size/Desc. (D)	Red	Notes/Comments
1	Transformer Rm #1 Swgr	ELNH-MCC-18M	225	6	500 kcmil	0	215	2	3" IMC	N	
2	Transformer Rm #1 Swgr	ELNH-MCC-18M	225	2	#4/0	215	0	2	n/a	N	grounds
3	ELNH-MCC-18M	ELNH-XFMR-018	50	1	4/C #6	0	40	1	1 1/2 "	N	
4	ELNH-XFMR-018	ELLV-PNL-009	40	1	5/C #2	0	30	1	1 1/2 "	N	
5	Transformer Rm #2 Swgr	ELNH-MCC-24E	175	6	500 kcmil	0	165	2	3" IMC	N	
6	Transformer Rm #2 Swgr	ELNH-MCC-24E	175	2	#4/0	165	0	2	n/a	N	
7	DCS-CAB	Elect. Equip.	1000	1	2-pair #18 Shild.	0	1000	1	3/4" IMC	N	I&C Cable
20	Equipment	Ground grid	60	1	#4 soft drawn copper	0	0	0	n/a	N	grounds for equipment

ATTACHMENT No. _1_
(Bulk Material Summary)

Scope Set: ELECTRICAL

Date: 4/10/2007

Prepared By:

Reviewed By:

Exterior Glovebox Cables

Sum of Qty XGB (ft)	
Ext. Cable Size/Type	Total
#4 soft drawn copper	300
500 kcmil	1,065
#4/0	355
4c #1/0	540
350 kcmil	320
4/c #2	80
5/c #4	40
2-pair #18 Shild	1,000
Grand Total	3,700

Interior Glovebox Cables

Sum of Qty NGB (ft)	
GB Cable Size/Type	Total
Grand Total	

All Raceway Types

Sum of Qty Rcwy (ft)	
RCWY	Total
3" IMC	330
2" IMC	470
1 1/2" IMC	60
3/4# IMC	1,000
Grand Total	1,860

All Raceway Types Grouped by Red Designation

Sum of Qty Rcwy (ft)		
Red	RCWY	Total
Grand Total		

KAC - 108-1K

Description: KAC Pu Disposition Facility Bulk Materials, Cable and Conduit
Mechanical Equipment Room 108-1K
Reference: E-E2-K-02240 R/B 480V Backup Power & Motor Control Center Single Line MCC-12E

			Cable Estimates (Exterior GB)			Shared Rcwy/Tray	Raceway Estimates				
Item #	From Equipment	To Equipment	XGB Length (A) (ft)	Qty (A)	Cable size/description	Length (C) (ft)	Length (D) (ft)	Qty (D)	Size/Desc. (D)	Red	Notes/Comments
1	Transformer Rm #1 Swgr	ELNH-DISC-011	175	3	500 kcmil	0	165	1	3" IMC	N	
2	Transformer Rm #1 Swgr	ELNH-DISC-011	175	1	#4/0	165	0	1	n/a	N	ground
3	EEP-DG-003	ELNH-ATS-003	40	3	500 kcmil	0	30	1	3" IMC	N	
4	EEP-DG-003	ELNH-ATS-003	40	1	#4/0	30	0	1	n/a	N	ground
5	ELNH-DISC-011	ELNH-MTS-004	30	3	500 kcmil	0	20	1	3" IMC	N	
6	ELNH-DISC-011	ELNH-MTS-004	30	1	#4/0	20	0	1	n/a	N	ground
7	ELNH-DISC-011	ELNH-ATS-003	30	3	500 kcmil	0	20	1	3" IMC	N	
8	ELNH-DISC-011	ELNH-ATS-003	30	1	#4/0	20	0	1	n/a	N	ground
9	ELNH-ATS-003	ELNH-MTS-004	30	3	500 kcmil	0	20	1	3" IMC	N	
10	ELNH-ATS-003	ELNH-MTS-004	30	1	#4/0	20	0	1	n/a	N	ground
11	ELNH-MTS-004	EEP-MCC-012E	50	3	500 kcmil	0	35	1	3" IMC	N	
12	ELNH-MTS-004	EEP-MCC-012E	50	1	#4/0	35	0	1	n/a	N	ground
13	EEP-MCC-012E	ELNH-DISC-012	250	1	4c #1/0	20	210	1	2" IMC	N	includes ground
14	ELNH-DISC-012	ELNH-XFMR-011	20	1	4c #1/0	0	10	1	2" IMC	N	includes ground
15	ELNH-XFMR-011	ELLV-UPS-004	20	4	350 kcmil	0	10	1	3" IMC	N	includes ground
16	ELLV-UPS-004	ELLV-PNL-002	20	4	350 kcmil	0	10	1	3" IMC	N	includes ground
17	EEP-MCC-012E	ELNH-DISC-013	250	1	4c #1/0	20	210	1	2" IMC	N	includes ground
18	ELNH-DISC-013	ELNH-XFMR-012	20	1	4c #1/0	0	10	1	2" IMC	N	includes ground
19	ELNH-XFMR-012	ELLV-UPS-005	20	4	350 kcmil	0	10	1	3" IMC	N	includes ground
20	ELLV-UPS-005	ELLV-PNL-003	20	4	350 kcmil	0	10	1	3" IMC	N	includes ground
21	EEP-MCC-012E	ELNH-XFMR-013	40	1	4/c #2	0	30	1	1 1/2" IMC	N	includes ground
22	ELNH-XFMR-013	ELLV-PNL-006	20	1	5/c #4	0	15	1	2" IMC	N	includes ground
23	EEP-MCC-012E	ELNH-XFMR-014	40	1	4/c #2	0	30	1	1 1/2" IMC	N	includes ground
24	ELNH-XFMR-014	ELLV-PNL-001	20	1	5/c #4	0	15	1	2" IMC	N	includes ground
25	DCS-CAB	Elect. Equip.	1000	1	2-pair #18 Shild	0	1000	1	3/4# IMC	N	I&C Cable
26	Equipment	Ground grid	300	1	#4 soft drawn copper	0	0	0	n/a	N	grounds for equipment

Scope Set: ELECTRICAL

Date: 4/10/2007

Prepared By: [signature]

Reviewed By: [signature]

Exterior Glovebox Cables

Sum of Qty XGB (ft)	
Ext. Cable Size/Type	Total
N/A	0
Grand Total	0

Interior Glovebox Cables

Sum of Qty NGB (ft)	
GB Cable Size/Type	Total
Grand Total	

All Raceway Types

Sum of Qty Rcwy (ft)	
RCWY	Total
12" x 4", 90degree	237
12" x 4", Tee fitting	27
24" x 4" 10' straight	650
12" x 4" x 10' straight	2,000
18" x 4" x 10' straight	20
24" to 12" x 4" reducer	3
24" x 4", 90degree	69
24" x 4", Tee fitting	51
Grand Total	3,057

All Raceway Types Grouped by Red Designation

Sum of Qty Rcwy (ft)		
Red	RCWY	Total
Grand Total		

KAC - CABLE TRAY

ATTACHMENT No. _1_
(Bulk Material Backup Data)

Description: KAC Pu Disposition Facility Bulk Materials, Cable Tray and Duct Bank Conduits
Cable tray for 105 Building, ductbanks (including direct buried) to Chiller Plant & Fan House

Reference: SK-DE-BOP-0007 Power Elect. Cable Tray -20 Elevation
SK-DE-BOP-0008 Power Elect. Cable Tray -40 Elevation
SK-DE-BOP-0009 Signal/Control Cable Tray -20 Elevation
SK-DE-BOP-0010 Signal/Control Cable Tray -40 Elevation

Item #	From Equipment	To Equipment	Cable Estimates (Exterior GB)			Shared Rcwy/Tray	Raceway Estimates				
			XGB Length (A) (ft)	Qty (A)	Cable size/description	Length (C) (ft)	Length (D) (ft)	Qty (D)	Size/Desc. (D)	Red	Notes/Comments
1	bulk tray	bulk tray	0	0	N/A	0	3	79	12" x 4", 90degree	N	fitting, aluminum, 9" rung sp
	bulk tray	bulk tray	0	0	N/A	0	3	9	12" x 4", Tee fitting	N	fitting, aluminum, 9" rung sp
	bulk tray	bulk tray	0	0	N/A	0	10	200	12" x 4" x 10' straight	N	aluminum, 9" rung spacing
	bulk tray	bulk tray	0	0	N/A	0	10	2	18" x 4" x 10' straight	N	aluminum, 9" rung spacing
	bulk tray	bulk tray	0	0	N/A	0	3	1	24" to 12" x 4" reducer	N	aluminum, 9" rung spacing
	bulk tray	bulk tray	0	0	N/A	0	3	23	24" x 4", 90degree	N	fitting, aluminum, 9" rung sp
	bulk tray	bulk tray	0	0	N/A	0	3	17	24" x 4", Tee fitting	N	fitting, aluminum, 9" rung sp
	bulk tray	bulk tray	0	0	N/A	0	10	65	24" x 4" 10' straight	N	aluminum, 9" rung spacing
	bulk tray	bulk tray	0	0	N/A	0				N	
	bulk tray	bulk tray	0	0	N/A	0				N	
	bulk tray	bulk tray	0	0	N/A	0				N	

Scope Set: ELECTRICAL **Date:** 4/10/2007

Prepared By: **Reviewed By:**

Exterior Glovebox Cables

Sum of Qty XGB (ft)	
Ext. Cable Size/Type	Total
#2 15kV	4,520
#4 (19 strand) MHD Copper	3,375
#2 (7strand) MHD Copper	1,125
#6 MHD Copper	300
#4 soft drawn copper	530
500 kcmil	240
#10	100
#2/0	120
#6	330
#1/0	80
n/a	0
2-pair #18 Shild.	1,000
Grand Total	11,720

Interior Glovebox Cables

Sum of Qty NGB (ft)	
GB Cable Size/Type	Total
Grand Total	

All Raceway Types

Sum of Qty Rcwy (ft)	
RCWY	Total
4" IMC	1,040
1" IMC	80
2" IMC	20
12" x 4"	110
3" PVC	1,300
3/4" IMC	1,000
Grand Total	3,550

All Raceway Types Grouped by Red Designation

Sum of Qty Rcwy (ft)		
Red	RCWY	Total
Grand Total		

OVERHEAD LINE POLE:

55' Class 3 Wooden Poles: Total 5

CHILLER BUILDING

ATTACHMENT No. _1_
(Bulk Material Backup Data)

Description: KAC Pu Disposition Modifications Chiller Plant, Bulk Materials, Cable and Conduit
Reference: E-E2-K-02234 R/B Central Chilled Wtr Plant Unit Substation Single Line and
E-E2-K-02235 R/B Central Chilled Wtr Plant 480V Motor Control Centers Single Lines

			Cable Estimates (Exterior GB)			Shared Rcwy/Tray	Raceway Estimates				
Item #	From Equipment	To Equipment	XGB Length (A) (ft)	Qty (A)	Cable size/description	Length (C) (ft)	Length (D) (ft)	Qty (D)	Size/Desc. (D)	Red	Notes/Comments
1	Existing 151-1K Swgr Bus 1 Breaker 1-12	13.8kV feeder 1 pole near 704-23K	430	4	#2 15kV	0	420	1	4" IMC	N	Underground in red dyed concrete includes ground conductor inside conduit
2	13.8kV feeder 1 pole near 704-23K	13.8kV feeder 1 pole at Chiller Plant	575	3	#4 (19 strand) MHD Copper	0	0	0	n/a	N	Aerial Lines
3	13.8kV feeder 1 pole at 151-1K	13.8kV feeder 1 pole at Chiller Plant	575	1	#2 (7strand) MHD Copper	0	0	0	n/a	N	Aerial Static Line
4	13.8kV feeder 1 pole at Chiller Plant	ELNH-USS-001C	150	4	#2 15kV	0	140	1	4" IMC	N	Underground in red dyed concrete includes ground conductor inside conduit
5	Each new pole	Ground rods	300	1	#6 MHD Copper	0	0	0	n/a	N	grounding of static lines
5	Duct bank	duct bank	430	1	#4 soft drawn copper	0	0	0	n/a	N	routed in ductbanks
6	Existing 151-1K Swgr Bus 2 Breaker 2-7	13.8kV feeder 2 pole at 151-1K	430	4	#2 15kV	0	420	1	4" IMC	N	Underground in red dyed concrete includes ground conductor inside conduit
7	13.8kV feeder 2 pole at 151-1K	13.8kV feeder 2 pole at Chiller Plant	550	3	#4 (19 strand) MHD Copper	0	0	0	n/a	N	Aerial Lines
8	13.8kV feeder 2 pole at 151-1K	13.8kV feeder 2 pole at Chiller Plant	550	1	#2 (7strand) MHD Copper	0	0	0	n/a	N	Aerial Static Line
10	13.8kV feeder 2 pole at Chiller Plant	ELNH-USS-001C	120	4	#2 15kV	0	0	0	4" IMC	N	Underground in red dyed concrete includes ground conductor inside conduit
9	ELNH-USS-001C	ELNH-MCC-001C	40	3	500 kcmil	0	30	1	4" IMC	N	
10	ELNH-USS-001C	ELNH-MCC-001C	40	1	#1/0	30	0	0	0	N	ground
11	ELNH-USS-001C	ELNH-MCC-002C	40	3	500 kcmil	0	30	1	4" IMC	N	
12	ELNH-USS-001C	ELNH-MCC-002C	40	1	#1/0	30	0	0	0	N	ground
13	ELNH-MCC-001C	ELLV-XFMR-001C	50	3	#6	0	40	1	1" IMC	N	
14	ELNH-MCC-001C	ELLV-XFMR-001C	50	1	#10	40	0	0	0	N	ground
15	ELLV-XFMR-001C	ELLV-PNL-001C	15	4	#2/0	0	10	1	2" IMC	N	
16	ELLV-XFMR-001C	ELLV-PNL-001C	15	1	#6	10	0	0	0	N	ground
17	ELNH-MCC-002C	ELLV-XFMR-002C	50	3	#6	0	40	1	1" IMC	N	
18	ELNH-MCC-002C	ELLV-XFMR-002C	50	1	#10	40	0	0	0	N	ground
19	ELLV-XFMR-002C	ELLV-PNL-002C	15	4	#2/0	0	10	1	2" IMC	N	
20	ELLV-XFMR-002C	ELLV-PNL-002C	15	1	#6	10	0	0	0	N	ground
21	MCCs	Cooling Towers	0	0	0	0	110	1	12" x 4"	N	aluminum ladder type, 9" rung sp.
22	105 building	chiller plant	0	0	n/a	0	1300	1	3" PVC	N	
23	DCS-CAB	Elect. Quip.	1000	1	2-pair #18 Shild.	0	1000	1	3/4" IMC	N	I&C Cable
24	Equipment	Ground grid	100	1	#4 soft drawn copper	0	0	0	0	N	ground

Scope Set: ELECTRICAL **Date:** 4/10/2007

Prepared By: **Reviewed By:**

Exterior Glovebox Cables

Sum of Qty XGB (ft)	
Ext. Cable Size/Type	Total
#4 (19 strand) MHD Copper	4,500
#2 (7strand) MHD Copper	1,500
#6 MHD Copper	1,500
500 kcmil	1,410
#2/0	470
#4/0 soft drawn copper	380
n/a	0
2-pair #18 Shild.	1,000
#2 15kV	600
Grand Total	11,360

Interior Glovebox Cables

Sum of Qty NGB (ft)	
GB Cable Size/Type	Total
Grand Total	

All Raceway Types

Sum of Qty Rcwy (ft)	
RCWY	Total
3" IMC	4,650
2" IMC	2,840
3/4" IMC	1,000
4" IMC	120
Grand Total	8,610

All Raceway Types Grouped by Red Designation

Sum of Qty Rcwy (ft)		
SC	RCWY	Total
Y	n/a	0
	3" IMC	4,650
	2" IMC	2,840
	3/4" IMC	1,000
Grand Total		8,490

OVERHEAD LINE POLE:

55' Class 3 Wooden Poles: Total 12

FAN HOUSE

ATTACHMENT No. _1_
(Bulk Material Backup Data)

Description: KAC Pu Disposition Modifications Fan House, Bulk Materials, Cable and Conduit
Reference: E-E2-K-02236 R/B Emergency Power System Single Line, 13.8kV-480V Swgr and
E-E2-K-02237,-02238,-02239 R/B Emergency Power System Motor Control Centers Single Lines

			Cable Estimates (Exterior GB)			Shared Rcwy/Tray	Raceway Estimates				
Item #	From Equipment	To Equipment	XGB Length (A) (ft)	Qty (A)	Cable size/description	Length (C) (ft)	Length (D) (ft)	Qty (D)	Size/Desc. (D)	Red	Notes/Comments
1	Tie-in to 13.8kV overhead feeder at existing pole K116-005 (from 151-1K)	13.8kV north feeder pole @ new substation (north)	550	3	#4 (19 strand) MHD Copper	0	0	0	n/a	N	Aerial lines
2	Existing 13.8kV (from 151-1K) overhead feeder at pole K116-005	13.8kV north feeder pole @ new substation (north)	550	1	#2 (7strand) MHD Copper	0	0	0	n/a	N	Aerial Static Line
3	13.8kV north feeder pole @ new substation	ELNA-USS-001	50	4	#2 15kV	0	40	1	4" IMC	N	Underground in red dyed concrete includes ground conductor inside conduit
4	Tie-in to 13.8kV underground feeder from existing splice box 152-6K (from 151-2K)	13.8kV south feeder pole near 152-6K	50	4	#2 15kV	0	40	1	4" IMC	N	Underground in red dyed concrete includes ground conductor inside conduit
5	13.8kV south feeder pole near 152-6K	13.8kV south feeder pole @ new substation (south)	950	3	#4 (19 strand) MHD Copper	0	0	0	n/a	N	Aerial lines
6	13.8kV south feeder pole near 152-6K	13.8kV south feeder pole @ new substation (south)	950	1	#2 (7strand) MHD Copper	0	0	0	n/a	N	Aerial Static Line
7	13.8kV north feeder pole @ new substation	ELNA-USS-002	50	4	#2 15kV	0	40	1	4" IMC	N	Underground in red dyed concrete includes ground conductor inside conduit
8	Each new pole	Ground rods	1500	1	#6 MHD Copper	0	0	0	n/a	N	grounding of static lines
9	Duct bank	duct bank	180	1	#4/0 soft drawn copper	0	0	0	n/a	N	ground routed in ductbanks
10	ELNH-SWGR-001	ELNH-MCC-001	50	3	500 kcmil	0	40	1	3" IMC	Y	
11	ELNH-SWGR-001	ELNH-MCC-001	50	1	#2/0	40	0	0	n/a	Y	ground
12	ELNH-SWGR-002	ELNH-MCC-002	50	3	500 kcmil	0	40	1	3" IMC	Y	
13	ELNH-SWGR-002	ELNH-MCC-002	50	1	#2/0	40	0	0	n/a	Y	ground
14	ELNH-SWGR-003	ELNH-MCC-003	50	3	500 kcmil	0	40	1	3" IMC	Y	
15	ELNH-SWGR-003	ELNH-MCC-003	50	1	#2/0	40	0	0	n/a	Y	ground
16	ELNH-SWGR-001	ELNH-SWGR-003	60	6	500 kcmil	0	50	2	3" IMC	Y	
17	ELNH-SWGR-001	ELNH-SWGR-003	60	2	#2/0	50	0	2	n/a	Y	ground
18	ELNH-SWGR-002	ELNH-SWGR-003	100	6	500 kcmil	0	85	2	3" IMC	Y	
19	ELNH-SWGR-002	ELNH-SWGR-003	100	2	#2/0	85	0	2	n/a	Y	ground
19	DCS-CAB	Elect. Equip.	1000	1	2-pair #18 Shild.	0	1000	1	3/4" IMC	Y	I&C Cable
20	105 building	fan house bldg.	0	0	n/a	0	710	4	2" IMC	Y	ductbank
21	105 building	fan house bldg.	0	0	n/a	0	710	6	3" IMC	Y	ductbank
22	Equipment	Ground grid	200	1	#4/0 soft drawn copper	0	0	0	n/a	Y	grounds for equipment

ATTACHMENT No. 2
(Bulk Material CSA)

½"Diameter Anchor Bolts = 200 Nos.
P1000 Unistrut = 100 ft
L4x4x1/2 Angle = 200 ft

Note: Follow the manufacturer's recommendations for the support details. More bulk materials than above List will be required for equipments used in the Chiller Building and Fan House Electric Power Distribution Systems per manufacturer's recommendations.

PLUTONIUM DISPOSITION PROJECT (U)
Project M09A
SCOPE OF WORK
E-SOW-K-00018 Revision 0
For
Public Address and Telecommunications Systems (U)

Originated by: _____ Date: 4/3/07
Ron Disher
Senior Electrical Designer

Reviewed by: _____ Date: 4/3/07
Suman Shah
Principal Electrical Engineer

Approved by: _____ Date: 4/3/07
Roderick King
Electrical/I&C Lead

Approved by: _____ Date: 4/3/07
Clayton Holloway
Mechanical Lead

Approved by: _____ FOR Date: 04.03.07
Ghada Elchoufi
C/S/A Lead

Approved by: _____ for D.N Date: 4.3.07
Drew Negus
Plant Design Lead

Approved by: _____ Date: 4/4/07
B.C. Patel
Project Engineer

Approved by: _____ (for JH) Date: 4/3/07
John Hammond
Construction Lead

Approved by: _____ Date: 4APR07
David Eisele
Design Authority

UNCLASSIFIED
DOES NOT CONTAIN UNCLASSIFIED
CONTROLLED NUCLEAR INFORMATION
DC/RO: _____ 4-3-07

Revision	Revision Date	Affected Section	Description of Change
0	4-4-07	N/A	Initial Revision

Table of Contents

1 SCOPE....4
1.1 General Description....4
1.2 Background....4
2 ACRONYMS/ABBREVIATIONS....4
3 DESCRIPTION OF PHYSICAL WORK....5
3.1 Performance Category and Functional Classification (PS, GS)....5
3.2 Electrical....6
4 ASSUMPTIONS....7
4.1 General Assumptions....7
4.2 Specific Assumptions....7
5 REFERENCES....7
5.1 Drawing List....7
5.2 Design Input Documents....8
5.3 Applicable SRS & Industry Codes, Guides and Standards....8
5.4 Related Scopes of Work (SOW)....8
6 ATTACHMENTS....8
6.1 Attachment 1, Bulk Material List....8
Attachment 1, Bulk Material List....9

1 SCOPE

1.1 General Description

This Scope of Work (SOW) Covers the Public Address and Telecommunication Systems for the Plutonium Disposition Project. The Public Address System with speakers in all areas of the building is vital to carry important site announcements and emergency notifications. The Telecommunications Systems are comprised of the In Plant Intercom Phone System and the Public Phone System. The In Plant Intercom Phone System is a closed loop phone network that is used to communicate between control and process areas of the building with the security related benefit that there is no outside access to the network. The Public Phone System is the Verizon based network that provides outside network access to the building.

1.2 Background

The Office of Environmental Management has approximately 13 metric tons (MT) of plutonium in approximately 21 MT bulk materials without any defined disposition path. The Plutonium Disposition (PUD) Project is critical to meet the Department of Energy's strategic goal of providing a responsible resolution to the permanent disposal of the nation's excess high-level radioactive materials and waste; and to enable the cleanup of Environmental Management sites.

The Plutonium Disposition Facility (PDF) will be located at the K-Area Complex (KAC) to disposition up to approximately 13 Metric Tons (MT) of Environmental Management (EM) owned surplus plutonium. The facility will utilize a vitrification process to vitrify plutonium into a lanthanide borosilicate (LaBS) glass matrix. This glass will be packaged into Bagless transfer cans and placed inside a Defense Waste Processing Facility (DWPF) type canister. The canister will be transported to DWPF and filled with High Level Waste (HLW) glass. The DWPF canisters will be stored in the Glass Waste Storage Buildings and later transported to the geologic repository at Yucca Mountain.

This Scope of Work (SOW) has been developed for the purpose of facilitating construction cost and schedule estimates for the Conceptual Design Report (CDR) on the PUD project. The input to this SOW was the approved technical baseline consisting of a Facility Design Description (FDD) and associated System Design Descriptions (SDD). Every intent has been made to assure alignment and consistency between this SOW and the appropriate sections of the technical baseline, in order to provide accurate estimates. This SOW is not a PUD technical baseline document. A more detailed description of the system can be found in the associated SDD listed in the reference section.

A HOLD is placed to identify information that is preliminary in nature, results from a design uncertainty, originates from insufficient documentation, needs verification, or identifies a discrepancy. A **TBD** is placed to identify places in the text where numeric values or descriptive information is not available at the time that the current revision of the SOW is released.

2 ACRONYMS/ABBREVIATIONS

AC	Alternating Current
AWG	American Wire Gauge
BB	Building Block
DCS	Distributed Control System
DS	Design Services
DWPF	Defense Waste Processing Facility
ECF	Entry Control Facility
EMT	Electrical Metallic Conduit

E3S	Electronic Safeguards and Security System
GS	General Services
IEEE	Institute of Electrical and Electronic Engineers
IMC	Intermediate Metallic Conduit
KAC	K-Area Complex
LaBS	Lanthanide Borosilicate
LLW	Low Level Waste
NFPA	National Fire Protection Association
PC	Performance Category
PC&S	Process and Control Services Department
PS	Production Support
PU	Plutonium
PUD	Plutonium Disposition
PuVit	Plutonium Vitrification
SDD	System Design Description
SOW	Scope of Work
SRID	Safeguards and Security Requirements Identification Document
SRS	Savannah River Site
S&S	Safeguards & Security
SSC	Structure, System, Component
TBD	To Be Determined
UCNI	Unclassified Controlled Nuclear Information
UNO	Unless Noted Otherwise

3 DESCRIPTION OF PHYSICAL WORK

3.1 Performance Category and Functional Classification (PS, GS)

3.1.1 Performance Category

The performance category for the Public Address System and Telecommunications system is PC-1 as defined in G-FDD-K-00001, Rev. C, Table 1-2.

3.1.2 Functional Classification

3.1.2.1 The systems in this SOW shall be designed in accordance with the requirements of WSRC Manual WSRC-E7, Conduct of Engineering and Technical Support Procedure 2.25 Rev 14, “Functional Classification”, as follows:

A. Public Address System

1. Functional Classification – Production Support (PS)

B. In Plant Intercom Phone System

1. Functional Classification – Production Support (PS)

C. Public Phone System and SRS Network

1. Functional Classification – General Services (GS)

3.2 Electrical

3.2.1 The following will be the major electrical components:

3.2.1.1 Public Address System:

The PA system consists of four amplifier racks on the -20 and -40 levels which receive input signals from microphones to be located in the 105-K main control room at +15 level, the waste handling control room at the -20 level, and the Feed Prep/Oxidation, Milling and Mixing/Vitrification, and Bagless/NDA process control rooms at the -40 level. The PA amplifiers are to be wired to output 350W/2ch at 70.7V which are to power 8 ohm, adjustable wattage loudspeakers. For available location of PA system see drawings SK-DE-COMS-001 thru SK-DE-COMS-0011.

3.2.1.2 In Plant Intercom Phone System:

The In Plant System is a closed loop phone network that consists of a Central Exchange Switch that routes calls from handset to handset. The handsets shall have the ability to dial combinations of numbers along with programmable preset combinations for 1-touch dialing. The handsets shall be capable of hand-held privacy talk as well as hands-free intercom talk. For available location of Plant Intercom Phone system see drawings SK-DE-COMS-001 thru SK-DE-COMS-0011. Trunk lines that connect floors levels shall be copper riser-rated multi-conductor cables. Distribution lines shall be CAT 3 minimum multi-conductor cables.

3.2.1.3 Public Phone System and SRS Network:

The public phone network consists of an existing Main Distribution Facility (MDF) in the main control room that is operated by the Local Exchange Carrier which is currently Verizon Inc, several fiber optic feeder cables to Intermediate Distribution Facilities (IDF) that are located throughout the building.
From the IDF, distribution cables are routed to individual phone jacks. For available location of Public Phone System and SRS Network see drawings SK-DE-COMS-001 thru SK-DE-COMS-0011. Distribution cables shall be minimum CAT 5E in the Universal Wiring Cable configuration per attachment #4 of WSRC-TM-95-1. Phone jacks, unless otherwise noted on drawings, shall meet the Universal Wiring Outlet configuration per Attachment #4 of WSRC-TM-95-1. Fiber optic feeder cables shall be six-fiber, riser-rated cables. Equipment for the IDFs shall be provided by Verizon Inc. Verizon Inc. shall make all wiring terminations to the MDF and IDFs.

3.2.1.4 Plant Design:

Not Applicable

3.2.1.5 Civil/Structural/Architectural:

Not Applicable

3.2.1.6 Mechanical:

Not Applicable

3.2.1.7 Instrumentation and Controls:

Not Applicable

4 ASSUMPTIONS

4.1 General Assumptions

4.1.1 The Construction Agency will be the SRS Construction Group. DS will provide engineering documentation for the installation of this equipment and will rely on the use of SRS Guides and Standards.
4.1.2 SRS Construction Group will procure all bulk materials.
4.1.3 SRS Construction Group will procure all off-the-shelf components and equipment identified on engineering data sheets that do not require testing or quality documentation.
4.1.4 Existing unused conduit is available primarily for wall/floor penetrations for the PA and telecom systems in various areas of the complex.

4.2 Specific Assumptions

4.2.1 Electrical

4.2.1.1 The PA system is to receive input signal from the existing 105-K PA system.
4.2.1.2 Adequate space is available in the Telephone Equipment room at the +15 level for any required additions to the public phone system equipment.
4.2.1.3 PA equipment and Plant Intercom Phone System shall be powered from the Facility UPS power panel with a minimum of 2-120V, 20A circuits.
4.2.2.4 Telecommunications upgrades for 0' grade level Personnel Wing Modifications are covered in C-SOW-K-00008.

5 REFERENCES

5.1 Drawing List

5.1.1 PUD Project Drawings & Sketches
5.1.1.1 E-EF-K-02088 - Public Address Riser Diagram
5.1.1.2 E-EF-K-02089 - In Plant Phone System Riser Diagram
5.1.1.3 SK-DE-COMS-0001- Telecommunication Plan -40 Level NE
5.1.1.4 SK-DE-COMS-0002- Telecommunication Plan -40 Level NW
5.1.1.5 SK-DE-COMS-0003- Telecommunication Plan -40 Level SW
5.1.1.6 SK-DE-COMS-0004- Telecommunication Plan -40 Level SE
5.1.1.7 SK-DE-COMS-0005- Telecommunication Plan -40 Level Greenfuel Disassembly
5.1.1.8 SK-DE-COMS-0006- Telecommunication Plan -20 Level NE
5.1.1.9 SK-DE-COMS-0007- Telecommunication Plan -20 Level NW
5.1.1.10 SK-DE-COMS-0008- Telecommunication Plan -20 Level SW
5.1.1.11 SK-DE-COMS-0009- Telecommunication Plan -20 Level SE
5.1.1.12 SK-DE-COMS-0010- Telecommunication Plan -20 Level ECF
5.1.1.13 SK-DE-COMS-0011- Telecommunication Plan +14 and +21 Level Crane Control Area
5.1.1.14 E-E9-K-02190 - Chiller Building Power Plan
5.1.1.15 SK-DE-HVAC-0005 – 13.8kV Power Plan and Electrical & I&C Services

5.2 Design Input Documents

The following Facility Design Description and System Design Descriptions are the baseline documents used to develop this SOW.

5.2.1 Facility Design Description

5.2.1.1 G-FDD-K-00001, Rev B "PUV Facility Design Description"

5.2.2 Facility Requirements

5.2.2.1 M&O-PUD-2006-00065, Rev. B "PA & Telecom Requirements Meeting Minutes" 9/12/2006

5.3 Applicable SRS & Industry Codes, Guides and Standards

5.3.1 Industry Codes and Standards

5.3.1.1 NFPA 70 – National Electric Code, 2005 Edition

5.3.2 SRS Guides & Standards

5.3.2.1 WSRC-TM-95-58, Guide No.
16051, Rev. 2 "Installation of Electrical Raceway Systems & CableTrays"
16052, Rev. 3"Installation of Electrical Wires, Cables & Terminations"
16053, Rev. 2 "Installation of Electrical Equipment"
16055, Rev. 2 "Installation of Lighting & Communication System"

5.3.2.2 WSRC-TM-95-1, Attachment no. 4, Rev. 6 "Standardization of Equipment and Components"

5.4 Related Scopes of Work (SOW)

5.4.1 E-SOW-K-00017, Electrical General Scope of Work
C-SOW-K-00009, Structural and Architectural Modifications for the K-Area complex.
C-SOW-K-00008, Scope of Work Multifunctional Room in 105-K

6 ATTACHMENTS

6.1 Attachment 1, Bulk Material List

Attachment 1, Bulk Material List

Quantity	Allotment	Item	Description	Reference
184	Each	Public Address Speaker	70.7V, Adjustable Internal Transformer for Multiple Wattage Settings Atlas #AP-15T	E-DS-K-00025 E-EF-K-02088 SK-DE-COMS-0001 thru SK-DE-COMS-0011
5	Each	Public Address Microphone		E-EF-K-02088
4	Each	Public Address Amplifier	2ch,350W/ch,70V,30HZ-50KHZ Atlas #CP700	E-DS-K-00024 E-EF-K-02088 SK-DE-COMS-0001 thru SK-DE-COMS-0011
12000	FT	#14 AWG Wire	Wire for PA circuits	E-EF-K-02088 SK-DE-COMS-0001 thru SK-DE-COMS-0011
1000	FT	¾" IMC conduit		E-EF-K-02089 SK-DE-COMS-0001 thru SK-DE-COMS-0011
1	Each	Intercom system Central Exchange Switch	56ch,300-5000HZ,electronic switch Ring-Master #RM5000	E-EF-K-02089 SK-DE-COMS-0001 thru SK-DE-COMS-0011
1	Each	Intercom Master Handset	Ring-master #AE111 Desktop unit	E-EF-K-02089
33	Each	Intercom Handset	Ring-Master #AE916	E-EF-K-02089 SK-DE-COMS-0001 thru SK-DE-COMS-0011
500	FT	50 Pair Telecom Cable	22GA,50 twisted pair, riser-rated shielded cable	E-EF-K-02089 SK-DE-COMS-0001 thru SK-DE-COMS-0011
1	Each	Intercom Distribution Panel	Hoffman 24"X20"X6" box with backboard panel and 66-type punch down block	E-EF-K-02089 SK-DE-COMS-0003
6800	FT	Intercom System CAT5E telecom distribution cable	8 twisted pair, 22GA, shielded cable	E-EF-K-02089 SK-DE-COMS-0001 thru SK-DE-COMS-0011
4600	FT	¾" IMC conduit		E-EF-K-02089 SK-DE-COMS-0001 thru SK-DE-COMS-0011
31	Each	Public Phone Universal Wiring Outlet	SRS standard Telecom receptacle with 1 voice,2 data ports	SK-DE-COMS-0001 thru SK-DE-COMS-0011 WSRC-TM-95-1, Attachment #4
2100	FT	8" basket type cable tray		SK-DE-COMS-0001 thru

Quantity	Allotment	Item	Description	Reference
				SK-DE-COMS-0011
1800	FT	2” EMT conduit		SK-DE-COMS-0001 thru SK-DE-COMS-0011
14000	FT	Public Phone CAT5E telecom distribution cable	8 twisted pair, 22GA, shielded cable	SK-DE-COMS-0001 thru SK-DE-COMS-0011
2400	FT	Public Phone Fiber optic Feeder Cable	6-fiber, loose tube, singlemode, 8.3/125um, riser-rated cable	SK-DE-COMS-0001 thru SK-DE-COMS-0011

PLUTONIUM DISPOSITION PROJECT (U)

Project M09A

SCOPE OF WORK

F-SOW-K-00001 Revision 0

for

Fire Protection System (U)

Originated by: _____ Date: 4-2-07
C. D. Bennett
Principal Fire Protection Engineer

Reviewed by: _____ Date: 4/2/07
John Lavigne
Fire Protection Lead

Approved by: _____ Date: 4/2/07
Clayton Holloway
Mechanical Lead

Approved by: _____ Date: 4/2/07
Roderick King
Electrical/I&C Lead

Approved by: _____ FOR Date: 04.03.07
Ghada Elchoufi
C/S/A Lead

Approved by: James Plumley for D.N. Date: 4.3.07
Drew Negus
Plant Design Lead

Approved by: _____ (for JH) Date: 4/4/07
John Hammond
Construction Lead

Approved by: _____ Date: 9APR07
Mike Vitacco
Fire Protection Design Authority

Approved by: _____ Date: 4/9/07
B.C. Patel
Project Engineer

UNCLASSIFIED
DOES NOT CONTAIN UNCLASSIFIED CONTROLLED NUCLEAR INFORMATION
DC/RO: _____ 4-2-07

Revision Page

Revision	Revision Date	Affected Section	Description of Change
0	4/9/07	N/A	Initial Revision

Table of Contents

Section Page

1.0 SCOPE 4
1.1 General Description 4
1.2 Background 4
2.0 ACRONYMS/ABBREVIATIONS 4
3.0 DESCRIPTION OF PHYSICAL WORK 5
3.1 Performance Category and Functional Classification (SS, PS, GS) 5
3.2 Process Building 6
3.3 Non-Process Building 7
3.4 Gloveboxes, Hoods, and Material Handling 8
3.5 Instrumentation and Controls 9
3.6 Electrical 10
3.7 Mechanical 10
3.8 Plant Design 10
3.9 Civil/Structural/Architectural 10
4.0 ASSUMPTIONS 10
4.1 General Assumptions 10
4.2 Specific Assumptions 10
5.0 Technology Development Issues 11
6.0 REFERENCES 11
6.1 Drawing List 11
6.2 Design Input Documents 11
6.3 Applicable SRS & Industry Codes, Guides and Standards 12
6.4 Related Scopes of Work (SOW) 13
6.5 Miscellaneous 13
7.0 ATTACHMENTS 13
7.1 Attachment 1, Bulk Material List – Fire Detection & Alarm System (4 Pages) 13

1.0 SCOPE

1.1 General Description

This scope of work describes the installation of Fire Protection equipment to protect all areas of process building, non-process building, gloveboxes, hoods, and material handling tunnels (between golveboxes).

1.2 Background

The Office of Environmental Management has approximately 13 metric tons (MT) of plutonium in approximately 21 MT bulk materials without any defined disposition path. The Plutonium Disposition (PUD) Project is critical to meet the Department of Energy's strategic goal of providing a responsible resolution to the permanent disposal of the nation's excess high-level radioactive materials and waste; and to enable the cleanup of Environmental Management sites.

The Plutonium Disposition Facility (PDF) will be located at the K-Area Complex (KAC) to disposition up to approximately 13 Metric Tons (MT) of Environmental Management (EM) owned surplus plutonium. The facility will utilize a vitrification process to vitrify plutonium into a lanthanide borosilicate (LaBS) glass matrix. This glass will be packaged into bagless transfer cans and placed inside a Defense Waste Processing Facility (DWPF) type canister. The canister will be transported to DWPF and filled with High Level Waste (HLW) glass. The DWPF canisters will be stored in the Glass Waste Storage Buildings and later transported to the geologic repository at Yucca Mountain.

This Scope of Work (SOW) has been developed for the purpose of facilitating construction cost and schedule estimates for the Conceptual Design Report (CDR) on the PUD project. The input to this SOW was the approved technical baseline consisting of a Facility Design Description (FDD) and associated System Design Descriptions (SDD). Every intent has been made to assure alignment and consistency between this SOW and the appropriate sections of the technical baseline, in order to provide accurate estimates. This SOW is not a PUD technical baseline document. A more detailed description of the system can be found in the associated SDD listed in the reference section.

A HOLD is placed to identify information that is preliminary in nature, results from a design uncertainty, originates from insufficient documentation, needs verification, or identifies a discrepancy. A **TBD** is placed to identify places in the text where numeric values or descriptive information is not available at the time that the current revision of the SOW is released.

2.0 ACRONYMS/ABBREVIATIONS

AC	Alternating Current
DCS	Distributed Control System
DACT	Digital Alarm Communicator Transmitter
DS	Design Services
ECF	Entry Control Facility
GS	General Services
HVAC	Heating, Ventilation and Air Conditioning
KAC	K-Area Complex
LaBS	Lanthanide Borosilicate
NFPA	National Fire Protection Association

PC	Performance Category
PU	Plutonium
PUD	Plutonium Disposition
PuVit	Plutonium Vitrification
SDD	System Design Description
SOW	Scope Of Work
SRS	Savannah River Site
SRSOC	Savannah River Site Operations Center
SS	Safety Significant
SSC	Structure, System, Component
TBD	To Be Determined
UCNI	Unclassified Controlled Nuclear Information
UNO	Unless Noted Otherwise
WBS	Work Breakdown Structure
WSRC	Washington Savannah River Company

3.0 DESCRIPTION OF PHYSICAL WORK

3.1 Performance Category and Functional Classification (SS, PS, GS)

3.1.1 Performance Category

The performance Category for the Fire Protection System in the Fan/Diesel Generator Building is PC-3. PC-2 Performance Category shall be used in all other areas.

3.1.2 Functional Classification

a) The systems in this SOW shall be designed in accordance with the requirements of WSRC Manual -E7, Conduct of Engineering and Technical Support Procedure 2.25 Rev 14 "Functional Classification", as follows:

   1) Fire Suppression system (Gloveboxes) Functional Classification – Production Support (PS)
   2) Fire Detection & Alarm System (Process & Non-process Building) Functional Classification – Safety Significant (SS)
   3) Fire Suppression system (Fan/DG building) Functional Classification – Production Support (PS)

3.1.3 Functional Requirement

a) New Fire Detection and Alarm System shall be designed, installed, and acceptance tested in accordance with, NFPA 72-2007, NFPA 70-2005, NFPA 101-2006, NFPA 170-2002, NFPA 801-2003, DOE-STD-1066-99 and SRS Engineering Standard 01120.

b) New Fire Suppression System shall be designed, installed, and acceptance tested in accordance with NFPA 12-2005, NFPA 13-2007, NFPA 14-2007, NFPA 72-2007, NFPA 101-2006, NFPA 170-2002, NFPA 801-2003, NFPA 2001-2004, DOE-STD-1066-99 and SRS Engineering Standard 01120

c) The following fire alarm circuits shall be designed and installed in accordance with NFPA 72 and NFPA 70:
   - Notification Appliance Circuit (NAC) - Class B (2 wire) Style Y
   - Signaling Line Circuit (SLC) - Class B (2 wire) Style 4
   - Initiating Device Circuit (IDC) - Class B (2 wire) Style B.

3.2 Process Building

3.2.1 Fire Suppression System

a) Wet-pipe type suppression systems in accordance with NFPA 13 shall provide protection from fire in the following areas of the process building:
- -20' Level
- -40' Level
- Stair enclosures 2, 3, 4, and 5
- Corridors 1 & 2 on 0' Level
- Dumbwaiter shaft and access corridor on 0' Level
- Magazine and canister loading area on 0' Level
- Portions of main control room on +15 Level
- Magazine and canister loading control room at +20' Level

b) Fire hose and standpipe systems in accordance with NFPA 14 shall be extended from stair enclosures 1, 2, and 3 to provide manual fire fighting capability in the following areas of the process building:
- -20' Level
- -40' Level
- Stair enclosures 4 and 5
- Corridors 1 & 2 on 0' Level
- Magazine and canister loading area on 0' Level
- Portions of main control room on +15 Level
- Magazine and canister loading control room at +20' Level

c) The following major components will be included in each wet-pipe suppression system, unless noted otherwise:
- Upright and pendent sprinklers with ordinary temperature rating and standard coverage areas
- Extended coverage sidewall sprinklers with ordinary temperature rating
- Fire department connections for new valve houses
- Riser check valves
- Fire department connection check valve for new valve houses
- Water flow alarm switch
- Inspector test/pressure control/ drain assemblies
- Control (i.e. isolation) valves with tamper switch
- Drain and vent valves, as required
- Dead weight supports and seismic sway bracing

d) The following major components will be included in the fire hose and standpipe systems:
- Fire hose valves
- Sectional control (i.e. isolation) valves with tamper switch
- Drain and vent valves, as required
- Dead weight supports and seismic sway bracing

3.2.2 Fire Detection & Alarm System

a) The Fire Detection & Alarm System shall provide full area coverage of the following areas of the process building:
- Process areas at -40' and -20' elevation

- Corridors 1 & 2 and dumb waiter access corridor at 0' elevation
- Magazine & canister loading crane control room at +20' elevation and canister loading area at 0' elevation
- Portions of main control room on +15 Level
- Dumb waiter shaft

b) This system consists of the following major components. Refer to PUD Project drawings (Section 6.1.1) and Attachment 1 for the locations and quantities of these devices:

- Intelligent/addressable Fire Alarm Control Panel
- Addressable area smoke detectors
- Addressable heat detectors
- Addressable beam smoke detectors
- Addressable manual fire alarm pull boxes
- Addressable monitor, control, and relay modules
- Area Notification appliances (horn/strobes)
- Linear Heat detectors
- Remote Annunciator

c) This system provides following controls and interfaces:

- Monitor sprinkler flow and valve tamper switches
- Initiate elevator shunt trip and recall upon detection of fire in elevator shaft or machine room
- Provides area notification upon detection of fire in any of the glove boxes via Fire Suppression Control Panel
- Remote Annunciator in the main control room at +15' elevation
- Input to DCS upon detection of fire
- Input to SRSOC upon detection of fire via DACT

3.3 Non-Process Building

3.3.1 Fire Suppression System

a) Process Building wet-pipe type suppression systems shall provide protection from fire in the following areas of the non-process buildings:

- ECF (Building 108-2K) at -20' Level
- Mechanical Equipment Room 1 (Bldg. 108-1K) at -20' Level
- New elevator shaft and machine room at 0' Level

b) The following major components will be included in each wet-pipe suppression system in the non-process buildings:

- Upright and pendent sprinklers with ordinary temperature rating and standard coverage areas
- Drain and vent valves, as required
- Dead weight supports and seismic sway bracing

c) Clean agent fire suppression systems in accordance with NFPA 2001 will provide protection from fire in the following areas of the Fan / Diesel Generator Building:

- Fan Rooms 1, 2, and 3
- Diesel Generator Rooms 1 and 2
- Control Room

d) The following major components will be included in each clean agent fire suppression system in the Fan / Diesel Generator Building:

- Main and reserve gas storage cylinders

- Nozzles
- Cylinder discharge heads
- Discharge pressure switches

3.3.2 Fire Detection & Alarm System

a) The Fire Detection & Alarm System shall provide full area coverage of the following areas of the non-process building:
   - ECF, Purification Wing, and Mechanical Equipment Room 1 (Bldg. 108-1K) at -20' elevation
   - ECF, and new elevator shaft and machine room
   - Fan / Diesel Generator Building
   - Dumb waiter shaft

b) This system consists of the following major components. Refer to PUD Project drawings (Section 6.1.1) and Attachment 1 for the locations and quantities of these devices:
   - Intelligent/addressable Fire Suppression Control Panel for Fan / Diesel Generator Building
   - Addressable area smoke detectors
   - Addressable heat detector
   - Linear heat detector
   - Addressable manual fire alarm pull boxes
   - Addressable Manual Clean Agent (FM-200) Release stations
   - Addressable monitor, control, and relay modules
   - Area Notification appliances (horn/strobes)
   - Remote Annunciator

c) This system provides following controls and interfaces:
   - Monitor sprinkler flow and valve tamper switches
   - Provides area notification upon detection of fire in Fan / Diesel Generator Building
   - Remote Annunciator in the main control room at +15' elevation
   - Initiate release of clean agent suppression system on detection of fire or manual actuation.
   - Isolate the area from HVAC system for gaseous suppression when fire is detected.
   - Input to SRSOC upon detection of fire via DACT

3.4 Gloveboxes, Hoods, and Material Handling

3.4.1 Fire Suppression Systems

a) Clean agent fire suppression systems in accordance with NFPA 2001 will provide protection from fire in the following gloveboxes:
   - Green Fuel Disassembly
   - Oxidation Exit
   - Feed Prep
   - Milling and Mixing
   - Vitrification
   - Bagless Transfer
   - Material Transfer System

b) Carbon dioxide fire suppression system in accordance with NFPA 12 will provide protection from fire in the following glovebox:
   - Oxidation Entry

c) The following major components will be included in each gaseous suppression system, clean agent and carbon dioxide, in the non-process buildings:
   - Main and reserve gas storage cylinders
   - Nozzles
   - Cylinder discharge heads
   - Discharge pressure switches

3.4.2 Fire Detection & Alarm System

a) The Fire Detection & Alarm System shall provide coverage of the following gloveboxes:
   - Green Fuel assembly glove box
   - Oxidation gloveboxes
   - Feed Prep glovebox
   - Milling & Mixing glovebox
   - Vitrification gloveboxes
   - Lag Storage glovebox
   - Empty Can Loading glovebox
   - Bagless Transfer glovebox
   - Material Handling System gloveboxes

b) This system consists of the following major components. Refer to PUD Project drawings (Section 6.1.1) and Attachment 1 for the locations and quantities of these devices:
   - Intelligent/addressable Fire Suppression Control Panel
   - Addressable Manual Clean Agent (FM-200) and Carbon Dioxide Release stations
   - Addressable monitor, control, and relay modules
   - Area (Local) Notification appliances (strobes)
   - Linear Heat detectors
   - Remote Annunciator

c) This system provides following controls and interfaces:
   - Interface with Fire Alarm Control Panel for area notification upon detection of fire in any of the glove boxes
   - Provide local notification of fire in the glove box
   - Remote Annunciator in the main control room at +15' elevation
   - Input to DCS upon detection of fire for control of HVAC system
   - Initiate release of clean agent or carbon dioxide into the protected area on automatic fire detection or manual actuation.
   - Isolate the protected area from the ventilation system when fire is detected.
   - Input to SRSOC upon detection of fire via DACT

3.5 Instrumentation and Controls

a) The Fire Alarm System interface with HVAC system is provided through DCS.

3.6 Electrical

a) The following is the electrical scope:

- Provide 120 Vac dedicated power source to Fire Alarm Control Panel (total 1) and Fire Suppression Control Panel (total 2)

3.7 Mechanical

a) Refer to M-SOW-K-00020 for the installation details of fire dampers.

3.8 Plant Design

a) Fire Protection bulk piping material quantities can been estimated from wet-pipe suppression and fire hose and standpipe system layout drawings listed in Section 6.1.1 a).

3.9 Civil/Structural/Architectural

a) Refer to C-SOW-K-00009 for the installation details for fire walls/barriers, fire doors, seismic supports and anchors.

4.0 ASSUMPTIONS

4.1 General Assumptions

4.1.1 The Construction Agency will be the SRS Construction Group. DS will provide engineering documentation for the installation of this equipment and will rely on the use of SRS Guides and Standards.

4.1.2 SRS Construction Group will procure all bulk materials.

4.1.3 SRS Construction Group will procure all off-the-shelf components and equipment identified on engineering data sheets that do not require testing or quality documentation.

4.1.4 All water suppression piping will be per NFPA 13, NFPA 14, and Engineering Guide 15060-G, Appendix A, Piping Specification PS-905.

4.1.5 All clean agent system piping will be per NFPA 2001 and Engineering Guide 15060-G, Appendix A, Piping Specification PS-906.

4.1.6 All carbon dioxide system piping will be per NFPA 12 and Engineering Guide 15060-G, Appendix A, Piping Specification PS-907.

4.2 Specific Assumptions

4.2.1 Instrumentation and Controls

a) No specific assumptions have been made in this group.

4.2.2 Electrical

a) No specific assumptions have been made in this group.

4.2.3 Plant Design

a) No specific assumptions have been made in this group.

4.2.4 Civil/Structural/Architectural

a) No specific assumptions have been made in this group.

5.0 Technology Development Issues

a) There are no Technology Development Issues

6.0 REFERENCES

6.1 Drawing List

6.1.1 PUD Project Drawings & Sketches

a) Fire Suppression Systems

- F-M6-K-00016 – Fire Protection Interior Header P&ID
- F-M6-K-00017 – Fire Suppression, -40' & -20' P&ID
- F-M6-K-00018 – Typical Gaseous Fires Suppression P&ID
- SK-DE-FP-0001 – Fire Protection Interior Header P&ID
- SK-DE-FP-0002 – Fire Protection Interior Header P&ID
- SK-DE-FP-0003 – Fire Protection Interior Header P&ID
- F-PF-K-00008 – Wet Pipe Fire Suppression System Layout, -40' Elevation
- F-PF-K-00009 – Wet Pipe Fire Suppression System Layout, -20' Elevation
- F-PF-K-00010 – Wet Pipe Fire Suppression System Layout, 0' Elevation
- F-PF-K-00012 – Fire Hose & Standpipe System Layout, -40' Elevation
- F-PF-K-00013 – Fire Hose & Standpipe System Layout, -20' Elevation
- F-PF-K-00014 – Fire Hose & Standpipe System Layout, 0' Elevation

b) Fire Detection & Alarm System

- F-JF-K-00003 – Fire Protection System, Functional Block Diagram
- F-JF-K-00004 – Fire Protection System, Functional Block Diagram
- F-J9-K-00007 – Location Plan – (-) 40' Elevation
- F-J9-K-00008 – Location Plan – (-) 20' Elevation
- F-J9-K-00009 – Location Plan – 0' Elevation
- F-J9-K-00014 – Location Plan – Fan/DG Bldg.
- F-J2-K-00008 – Fire Alarm Control Panel, Logic Diagram
- F-2F-K-00009 – Fire Suppression Control Panel, Logic Diagram
- F-2F-K-00010 – Fire Suppression Control Panel, Logic Diagram

6.1.2 Existing Savannah River Site (SRS) Drawings

a) None

6.2 Design Input Documents

The following Facility Design Description, System Design Descriptions, and other baseline documents that are used to develop this SOW.

6.2.1 Facility Design Description

a) G-FDD-K-00001, Rev B "PVF Facility Design Description"

6.2.2 System Design Description

a) None

6.2.3 Miscellaneous

a) F-PFHA-K-00007, Rev. 0, "Project Fire Hazard Analysis for PuVit Facility"
b) F-ESR-K-00054, Rev. 0, "Project Fire Protection Requirement Study for PuVit Facility"
c) F-CLC-K-00023, Rev. 0, "Maximum Fire Protection Discharge Capacity and Expected Flooding Depth"

6.3 Applicable SRS & Industry Codes, Guides and Standards

6.3.1 Industry Codes and Standards

a) NFPA 72, 2007 – National Fire Alarm Code
b) NFPA 12, 2005 – Carbon Dioxide Extinguishing Systems
c) NFPA 13, 2007 –Installation of Sprinkler Systems
d) NFPA 14, 2007 – Installation of Standpipe and Hose Systems
e) NFPA 101, 2006 – Life Safety Code
f) NFPA 70, 2005 – National Electrical Code
g) NFPA 170, 2002 – Standard for Fire Safety & Emergency Symbols
h) NFPA 801, 2003 – Standard for Fire Protection for Facilities Handling Radioactive Material
i) NFPA 2001, 2004 – Standard for Clean Agent Fire Extinguishing System
j) ASME A17.1, 2004 – Safety Code for Elevators & Escalators

6.3.2 SRS Guides & Standards

a) WSRC-TM-95-1, Standard No.01120, Rev. 6 – SRS Fire Protection Design Criteria
b) WSRC 2Q, Procedure 2.13, Rev. 2 – Fire Protection Training
c) WSRC-IM-95-58, Guide No. 01120-G, Rev. 0 – SRS Fire Protection Recommended Practices & Guidance Criteria
d) WSRC-IM-95-58, Guide No. 16051-G, Rev. 2 – Installation of Electrical Raceway Systems and Cable Treys
e) WSRC-IM-95-58, Guide No. 16052-G, Rev. 3 – Installation of Electrical Wires, Cables and Terminations
f) WSRC-IM-95-58, Guide No. 16053-G, Rev. 2 – Installation of Electrical Equipment

6.4 Related Scopes of Work (SOW)

6.4.1 C-SOW-K-00009, Structural & Architecture Modifications for Process Bldg. Systems- This related SOW provides the details of fire walls/barriers, fire doors, seismic supports and anchors.

6.4.2 M-SOW-K-00020, HVAC Systems

6.4.3 E-SOW-K-00017, Electrical General Scope of Work - Electrical power is supplied to Fire Alarm Control Panel & Fire Suppression Control Panel as described in this related SOW.

6.4.4 J-SOW-K-00002, Integrated Control System & MC&A Network

6.5 Miscellaneous

6.5.1 N/A

7.0 ATTACHMENTS

7.1 Attachment 1, Bulk Material List – Fire Detection & Alarm System (4 Pages)

FIRE PROTECTION SYSTEM
F-SOW-K-00001, REV. 0, ATTACHMENT 1

DESCRIPTION, MANUFACTURER & MODEL NUMBER	PROCESS BUILDING FIRE DETECTION SYSTEM	NON-PROCESS BUILDING FIRE DETECTION SYSTEM	GLOVEBOXES, HOODS, & MATERIAL HANDLING FIRE DETECTION SYSTEM
Intelligent Addressable Fire Alarm Control Panel Onyx Series NFS2-640 Notifier Model Number: CPU2-640	1	1	1
Loop Expander Module Notifier Model LEM-320	1	0	0
80 Character Display Notifier Model Number: KDM-R2	1	1	1
Digital Alarm Communicator Transmitter Notifier Model Number: UDACT	1	1	1
Battery, 12 Volt, 26 AH Notifier Model Number: BAT-12260	0	2	2
Battery, 12 Volt, 55 AH Notifier Model Number: BAT-12550	2	0	0
Battery Charger Notifier Model CHG-120	1	0	0
Battery Cabinet Notifier Model BB-55	1	0	0
Remote Annunciator Notifier Model LCD-80TM	1	1	1
Remote Power Supply Notifier Model FCPS-24S8	3	0	1
Battery, 12 Volt, 7 AH for FCPS-24S8 Notifier Model Number: BAT-1270	6	0	2
Addressable Photo Smoke Detector w/ base & 4" square metallic electrical box Notifier Model Number: FSP-851 w/ B710LP	200	40	0

FIRE PROTECTION SYSTEM
F-SOW-K-00001, REV. 0, ATTACHMENT 1

DESCRIPTION, MANUFACTURER & MODEL NUMBER	PROCESS BUILDING FIRE DETECTION SYSTEM	NON-PROCESS BUILDING FIRE DETECTION SYSTEM	GLOVEBOXES, HOODS, & MATERIAL HANDLING FIRE DETECTION SYSTEM
Addressable Heat Detector w/ base & 4" square metallic electrical box Notifier Model Number: FST-851 w/ B710LP	4	1	0
Linear Heat Detector Protectowire Model PHSC-155-EPC	100'	20'	1000'
Addressable Manual Fire Alarm Pull Box, Dual Action with Back Box Notifier Model Number: NBG-12LX w/ SB-I/O	20	4	0
Addressable Clean Agent Manual Release Station with Back Box	0	7 1 per System	23 1 per System
120 V AC Power Supply Disconnect Switch Allen-Bradley Model Number: 600-TAX49	1	1	1
24 VDC Horn and Strobe Light Assembly, 90 & 95 dBA, 15/30/75/110cd Selectable w/ Back Box System Sensor Model Number: P2R w/ BBS-2	70	20	0
24 VDC Strobe Light Assembly, 15/30/75/110cd Selectable w/ Back Box System Sensor Model Number: SR w/ BBS-2	0	10	40
Smart Sync Module w/ 4-11/16" sq. X 2-18" back box System Sensor Model MDL	2	2	2
Addressable Duct Smoke Detector Notifier Model Number: FSD-751P	0	0	0
Addressable Beam Smoke Detector With Remote Test Feature w/ Multi-mount Kit Notifier Model Number: FSB-200S w/ BEAMMMK	2	0	0
Key-Activated Remote Test Switch For Duct and	2	0	0

FIRE PROTECTION SYSTEM
F-SOW-K-00001, REV. 0, ATTACHMENT 1

DESCRIPTION, MANUFACTURER & MODEL NUMBER	PROCESS BUILDING FIRE DETECTION SYSTEM	NON-PROCESS BUILDING FIRE DETECTION SYSTEM	GLOVEBOXES, HOODS, & MATERIAL HANDLING FIRE DETECTION SYSTEM
Beam Smoke Detector Notifier Model Number: RTS451KEY			
Addressable Dual Monitor Module w/ surface mount box & face plate Notifier Model Number: FDM-1 w/ SMB500	8	0	0
Addressable Monitor Module w/ surface mount box & face plate Notifier Model Number: FMM-1 w/ SMB500	10	29 7 systems	92 4 per System
Addressable Relay Module w/ surface mount box & face plate Notifier Model Number: FRM-1 w/ SMB500	10	23 7 systems	69 3 per System
Addressable Control Module w/ surface mount box & face plate Notifier Model Number: FCM-1 w/ SMB500	2	8 7 systems	23 1 per System
Temperature Switch Potter Model Number: RTS-0	3	0	0
Electrical Enclosure, 16" x 12" x 6", CAB-1 with Sub-Panel Hoffman Cat. Number: A-1614CHQR w/ A-16P12	8	6	10
16 Pole Terminal Block, Panel Mount Sliding Link Type Disconnect States Products Cat. Number: M-25016	16	12	20
16 AWG Twisted-Unshielded Pair, Power Limited Fire Protective SLC Cable, Type FPL PAIGE Electric Co. Notifier Part # 162LN or equal	11,000'	2,000'	2,000'
16 AWG Twisted-Unshielded Pair, Power Limited Fire Protective SLC Cable, Type FPL, 2 hour Fire Rated PAIGE Electric Co. Part # 73162CIC or equal	2,000'	400'	400'
16 AWG Twisted-shielded Pair, Power Limited Fire	400'	1,000'	400'

FIRE PROTECTION SYSTEM
F-SOW-K-00001, REV. 0, ATTACHMENT 1

DESCRIPTION, MANUFACTURER & MODEL NUMBER	PROCESS BUILDING FIRE DETECTION SYSTEM	NON-PROCESS BUILDING FIRE DETECTION SYSTEM	GLOVEBOXES, HOODS, & MATERIAL HANDLING FIRE DETECTION SYSTEM
Protective EIA 485 Cable, Type FPLR, 2 hour fire Rated PAIGE Electric Co. Part # 73162SCI			
12 AWG Twisted Pair, Power Limited Fire Alarm Rated Cable For NAC, IDC, 24V DC, Type FPL PAIGE Electric Co. Notifier Part # 122LN or equal	8,000'	2,400'	3,600'
12 AWG Twisted Pair, Power Limited Fire Alarm Rated Cable For NAC, 24V DC, Type FPL, 2 hour Fire Rated PAIGE Electric Co. # 73122CIC or equal	1,600'	400'	600'
12 AWG Solid 1/C, 120 V AC Power Supply Cable, THHN/THWN PAIGE Electric Co. Notifier Part # 12THHN or equal	200'	200'	200'
22 AWG Solid 4/C, NEC Type FPLR, Color: BK, WH, RD. GRN PAIGE Electric Co. Notifier Part # 454608AWH1 or equal	200'	200'	200'
¾" Rigid Galvanized Steel (RGS) Conduit	6,400'	2500'	2500'
¾" Flexible Galvanized Steel Conduit	200'	200'	200'

PLUTONIUM DISPOSITION PROJECT (U)

Project M09A

SCOPE OF WORK

J-SOW-K-00002 Revision 0

for

ICS and MC&A Network (U)

Originated by: _____ Date: 4-4-2007
Dave Day
Control Systems Engineer

Reviewed by: Randall Cotts for Rod King Date: 4-4-2007
Roderick King
Electrical/I&C Lead

Reviewed by _____ Date: 4/5/07
Charlie Givens
P&CS PCE Manager

Approved by: James Hendley for D.N. Date: 4.5.07
Drew Negus
Plant Design Lead

Approved by: _____ Date: 4-5-07
Clayton Holloway
Mechanical Lead

Approved by: _____ FOR Date: 04.05.07
Ghada Elchouli
C/S/A Lead

Approved by: _____ Date: 4-9-07
John Hammond
Construction Lead

Approved by: _____ Date: 4/9/07
Dale Nicosia
Design Authority

Approved by: _____ Date: 4/10/07
B.C. Patel
Project Engineer

UNCLASSIFIED
DOES NOT CONTAIN UNCLASSIFIED
CONTROLLED NUCLEAR INFORMATION

DC/RO: Ghada Elchouli, GSE
4/10/07

Revision Page

Revision	Revision Date	Affected Section	Description of Change
0	4/10/07	N/A	Initial Revision

Table of Contents

Section Page

1.0 SCOPE 4
1.1 General Description 4
1.2 Background 4
2.0 ACRONYMS AND ABBREVIATIONS 5
3.0 DESCRIPTION OF PHYSICAL WORK 5
3.1 Performance Category and Safety Classification (SC, SS, PS, GS) 5
3.2 Mechanical/Nuclear/Process 6
3.3 Instrumentation and Controls 6
3.4 Electrical 9
3.5 Plant Design 9
3.6 Civil/Structural/Architectural 10
4.0 ASSUMPTIONS 10
4.1 General Assumptions 10
4.2 Specific Assumptions 10
4.3 HBDER Scope 11
5.0 REFERENCES 11
5.1 Drawing List 11
5.2 Design Input Documents 12
5.3 Applicable SRS & Industry Codes, Guides and Standards 12
5.4 Related Scopes of Work (SOW) 13
5.5 Miscellaneous 13
6.0 ATTACHMENTS 13
6.1 Attachment 1, ICS/MC&A Bulk Material List
6.2 Attachment 2, C/S/A Bulk Material List

1.0 SCOPE

1.1 General Description

This Scope of Work (SOW) covers the Integrated Control System (ICS) and Material Control and Accountability System (MC&A) the for the Plutonium Disposition Project. The ICS contains all the equipment and software required to integrate control and monitoring of the plutonium disposition process and support systems. The MC&A System is a “RED” protected transmission system that controls data and accounts for nuclear material in use and in storage during the disposition process modes of operation to ensure all special nuclear materials within the Facility are accounted for and that unauthorized acts involving the SNM materials are detected. The scope boundary for the MC&A portion of this SOW is limited to the network equipment and software required to perform the accountability function. MC&A data gathering sensors for each of the process/storage blocks are covered in their respective SOWs. Similarly, the scope boundary for the ICS SOW is limited to the ICS network equipment and software required to perform the Building Block process control.

1.2 Background

The Office of Environmental Management has approximately 13 metric tons (MT) of plutonium in approximately 21 MT bulk materials without any defined disposition path. The Plutonium Disposition (PUD) Project is critical to meet the Department of Energy’s strategic goal of providing a responsible resolution to the permanent disposal of the nation’s excess high-level radioactive materials and waste; and to enable the cleanup of Environmental Management sites.

The Plutonium Disposition Facility (PDF) will be located at the K-Area Complex (KAC) to disposition up to approximately 13 Metric Tons (MT) of Environmental Management (EM) owned surplus plutonium. The facility will utilize a vitrification process to vitrify plutonium into a lanthanide borosilicate (LaBS) glass matrix. This glass will be packaged into bagless transfer cans and placed inside a Defense Waste Processing Facility (DWPF) type canister. The canister will be transported to DWPF and filled with High Level Waste (HLW) glass. The DWPF canisters will be stored in the Glass Waste Storage Buildings and later transported to the geologic repository at Yucca Mountain.

This Scope of Work (SOW) has been developed for the purpose of facilitating **construction** cost and schedule estimates for the Conceptual Design Report (CDR) on the PUD project. The input to this SOW was the approved technical baseline consisting of a Facility Design Description (FDD) and associated System Design Descriptions (SDD). Every intent has been made to assure alignment and consistency between this SOW and the appropriate sections of the technical baseline, in order to provide accurate estimates. This SOW is not a PUD technical baseline document. A more detailed description of the system can be found in the associated SDD listed in the reference section.

A HOLD is placed to identify information that is preliminary in nature, results from a design uncertainty, originates from insufficient documentation, needs verification, or identifies a discrepancy. A **TBD** is placed to identify places in the text where numeric values or descriptive information is not available at the time that the current revision of the SOW is released.

2.0 ACRONYMS/ABBREVIATIONS

CDR	Conceptual Design Report
CSSC	Container Surveillance and Storage Capability
DCS	Distributed Control System
DHCP	Dynamic Host Configuration Protocol
DNS	Domain Name System
DS	Design Services
EMT	Electrical Metallic Conduit
FDD	Facility Design Description
GS	General Services
GSA	General Services Administration
HVAC	Heating, Ventilation and Air Conditioning
IAW	In Accordance With
ICS	Integrated Control System
KAC	K-Area Complex
KIS	K-Area Interim Surveillance
KVM	Keyboard, Video, Mouse
MC&A	Material Control and Accountability System
PC	Performance Category
Pu	Plutonium
PUD	Plutonium Disposition
PDF	Plutonium Disposition Facility
SC	Safety Class
SDD	System Design Description
SNM	Special Nuclear Material
SOW	Scope Of Work
SRS	Savannah River Site
SS	Safety Significant
SSC	Structure, System, Component
TBD	To Be Determined
TRU	Transuranic Waste
UPS	Uninterruptible Power Supply
VAC	Volt(s) Alternating Current
VTR	Vault Type Room
WSRC	Washington Savannah River Company

3.0 DESCRIPTION OF PHYSICAL WORK

3.1 Performance Category and Safety Classification (SC, SS, PS, GS)

3.1.1 Performance Category

3.1.1.1 The Integrated Control System is Performance Category PC-1. (Reference G-FDD-K-00001)

3.1.1.2 The Material Control and Accountability System is Performance Category PC-1. (Reference G-FDD-K-00001)

3.1.2 Functional Classification

3.1.2.1 The systems in this SOW shall be designed in accordance with the requirements of WSRC Manual WSRC-E7, Conduct of Engineering and Technical Support Procedure 2.25 Rev 14, “Functional Classification”, as follows:

A. Integrated Control System

1. Functional Classification – Production Support (PS)

B. Safeguards and Security System

1. Functional Classification – Production Support (PS)

3.2 Mechanical/Nuclear/Process

3.2.1 None.

3.3 Instrumentation and Controls

3.3.1 Integrated Control System

3.3.1.1 DCS I/O Cabinets (21, purchased by Engineering) (refer to ICS network block diagram J-J8-K-00050 and data sheet J-JD-K-00147). Data sheets detail the individual items comprised within each ICS equipment enclosure.

[Note: “ Purchased or furnished by Engineering” may be by Design Services (DS) or Process and Control Systems (P&CS) as applicable]

A. 18 cabinets located in the -20’ level Melter I/O Support Room (refer to location sketch SK-DE-VIT-0010).

B. 1 cabinet located in the -40’ level Green Fuel Disassembly Room (refer to location sketch SK-DE-GFDS-0003). In addition to the components listed on data sheet J-JD-K-00147, this cabinet will contain one (1) network switch of type denoted as “SW3” on data sheet J-JD-K-00148.

C. 1 cabinet located in the Magazine Loading Control Room (refer to location sketch SK-DE-MLS-0005).

D. 1 cabinet located in the Fan House Control Room (refer to location sketch SK-DE-HVAC-0006).

3.3.1.2 DCS Server/Network Switch Cabinets (two each), purchased by Engineering) (refer to ICS network block diagram J-J8-K-00050 and data sheet J-JD-K-00148). Data sheets detail the individual items comprised within each ICS equipment enclosure.

A. 1 cabinet located in the Telephone Room (no location sketch).

B. 1 cabinet located in -20’ level Melter I/O Support Room (refer to location sketch SK-DE-VIT-0010).

C. One (1) network switch of type denoted as “SW3” on data sheet J-JD-K-00148 will be located inside the Operator Workstation furniture for each of the following:

1. Central Control Room (refer to location sketch SK-DE-BOP-0019).

2. Magazine Loading Control Room (refer to location sketch SK-DE-MLS-0005).

3. Vitrification/Milling & Mixing Control Room (refer to location sketch SK-DE-VIT-0009).

4. Oxidation/Feed Preparation Control Room (refer to location sketch SK-DE-VIT-0009).

5. Bagless Transfer/NDA Control Room (refer to location sketch SK-DE-BOP-0005).

6. Fan House Control Room (refer to location sketch SK-DE-HVAC-0006).

3.3.1.3 DCS Operator Workstation (15, purchased by Engineering) (refer to ICS network block diagram J-J8-K-00050 and data sheet J-JD-K-00149).

A. 8 operator workstations located in the Central Control Room (refer to location sketch SK-DE-BOP-0019).

B. 1 operator workstation located in the Magazine Loading Control Room (refer to location sketch SK-DE-MLS-0005).

C. 2 operator workstation located in the Vitrification/Milling & Mixing Control Room (refer to location sketch SK-DE-VIT-0009).

D. 1 operator workstation located in the Oxidation/Feed Preparation Control Room (refer to location sketch SK-DE-VIT-0009).

E. 1 operator workstation located in the Bagless Transfer/NDA Control Room (refer to location sketch SK-DE-BOP-0005).

F. 1 operator workstation located in the Fan House Control Room (refer to location sketch SK-DE-HVAC-0006).

3.3.1.4 Two (2) Color Printers, Hewlet-Packard Model 3800N, or equivalent located in the Central Control Room (refer to location sketch SK-DE-BOP-0019).

3.3.1.5 All Software and Licenses required to operate the ICS (purchased by Engineering).

3.3.1.6 For additional information related to the ICS system design, see J-PMP-K-00001.

3.3.2 Material Control and Accountability System (MC&A)

3.3.2.1 Refer to MC&A Network Block Diagram, J-J8-K-00049 for network connectivity and hardware. Refer to J-PMP-K-00002 for additional system design information for the MC&A network.

3.3.2.2 The MC&A network is based primarily on enterprise servers/switches. The interface cabinet, used for communicating permissives between MC&A and the ICS network, utilizes one Delta V- type drop. This cabinet is identified as MCA-CAB-005 and contains the necessary hardware to provide optical isolation of MC&A discrete outputs from the MC&A network. These outputs are estimated to be approximately 100 permissive type outputs for all building blocks and the Material Handling System. The MC&A network is a classified“RED system” and the ICS network is a classified “BLACK system”. Cabinet MCA-CAB-005 contains also a Delta V Pro Plus Server and a DNS, DHCP, Anti-Virus Server. The cabinet is located in the Melter I/O Support Room at the -20’ elevation.

3.3.2.3 The MC&A Main Server Cabinet, MCA-CAB-001 is located in the Melter I/O Support Room. This cabinet contains five (5) of the principal servers, including Milling and Mixing, Feed Prep, Bagless Transfer, Vitrification and Oxidation for their respective building blocks.

3.3.2.4 The MC&A Material Receipt server /network switch is contained within cabinet MCA-CAB-002. This cabinet is located in the CSSC Area at 0’ elevation. This cabinet also contains miscellaneous field interface electronics for connecting scales and barcode readers to the network. Network connections will be made to existing CSSC NDA equipment as shown on Control Block Diagram J-J8-K-00036.

3.3.2.5 The Magazine Loading server/network switch and miscellaneous field interface electronics for connecting scales and barcode readers to the network are contained in cabinet MCA-CAB-003, located in the Magazine Loading Control Room. Refer to Control Block Diagram J-J8-K-00034 for specific connections for this building block.

3.3.2.6 The Green Fuel server/network switch and miscellaneous field interface electronics for connecting scales and holdup monitors to the network are contained in cabinet MCA-CAB-004. This cabinet is located in the Green Fuel Rack Room at the -20’ elevation. Refer to Control Block Diagram J-J8-K-00048 for specific connections for this building block.

3.3.2.7 The MCA Waste Management is a specially treated independent building block. This system is unclassified “BLACK” - not physically tied to the classified “RED“ MC&A System. Transfer of MC&A measurement data to the MC&A Network is done by removable media in accordance with Safeguards and Security Requirements Identification Document (SRI), S-SRI-K-00005, Section 8.12. The Waste Management server/network switch is located in cabinet WM-CAB-001. Most of the Waste Management equipment is located in the TRU Waste Assay Room on the -20’ elevation. Refer to Control Block Diagram J-J8-K-00038 for specific connections for this building block.

3.3.2.8 The Central Control Room on the +15' elevation contains multiple Thin Clients on workstation MCA-OWS-001 for MC&A personnel use. This area serves as the primary operator interface point for all collected MC&A Identification and measurement data.

3.3.2.9 The Vitrification/Milling and Mixing Control Room located on the -40' elevation serves as the auxiliary control room for MC&A personnel use. This control room has full access to the MC&A network through multiple Thin Clients on workstation MCA-OWS-002.

3.3.2.10 As a "RED system", the MC&A Network, including all wiring and equipment, belongs to a protected transmission system and shall be installed per Security Plan Requirements (later). Selected components shall be installed in Vault Type Rooms (VTR's) or installed in GSA approved safe enclosures. These components will be identified in hardware data sheets or other means when available.

3.4 Electrical

3.4.1 Refer to Attachment 1 for cable and raceway bulk material summary report.

3.4.2 Work Scope includes installation of new grounding pigtails (approx. 10 ft. long with bolted connections) between new permanent electrical equipment and/or skids to the existing ground grid system. Small movable equipment shall be grounded in accordance with code and or industry practices.

3.4.3 Ethernet Fiber Cables installed between DCS network switches denoted as "SW1", "SW2" and "SW3" on data sheet J-JD-K-00148 to be supplied and installed by SRS.

3.4.4 Ethernet CAT5e cables installed between the DCS operator workstations, DCS I/O cabinets and the DCS network switches to be supplied by the vendor and installed by SRS.

3.4.5 Field side wiring of the DCS I/O cabinets is not included within the work scope boundaries of this SOW (field wiring is covered in the respective SOWs for each process block).

3.4.6 Each of the 21 DCS I/O Cabinets, 2 DCS Server/Network Switch Cabinets and 15 DCS Operator Workstations requires redundant 120 VAC power (UPS).

3.4.7 MC&A related electrical hardware and wiring shall be installed as a "RED system" per Security Plan Requirements (later). Interconnections between MC&A cabinets are generally fiber optic or CAT5e Ethernet cable (refer to Attachment 1, Bulk Material List).

3.5 Plant Design

3.5.1 None.

3.6 Civil/Structural/Architectural

3.6.1 The C/S/A scope of work required for installation supports for the major components of ICS and MC&A Network Systems is as follows:

Cabinets (47ea)

The size of each cabinet is approximately 36”x28”x73”h and weight is approximately 200lbs. The cabinets are supported with a mounting frame integral to the cabinets. The frame will be anchored, with ½” diameter anchor bolts, to the concrete slab. Follow manufacturer’s recommendations for the support details.

4.0 ASSUMPTIONS

4.1 General Assumptions

4.1.1 The Construction Agency will be the SRS Construction Group. Design Services will provide engineering and/or vendor documentation for the installation of this equipment and will rely on the use of SRS Guides and Standards.

4.1.2 SRS Construction Group will procure all bulk materials.

4.1.3 Design Services and/or Process and Control Systems is responsible for providing all Engineered Equipment..

4.2 Specific Assumptions

4.2.1 Mechanical

4.2.1.1 No specific assumptions have been made in this group.

4.2.2 Instrumentation and Controls

4.2.2.1 No field calibrations are required by Construction related to this SOW.

4.2.3 Electrical

4.2.3.1 All permanently installed cabling will be routed in protected conduit/tray.

4.2.3.2 Existing grounding grid is intact and adequate for grounding of new equipment.

4.2.3.3 ICS and MC&A network equipment will be installed utilizing equipment grounding practices similar to that in use for current KAC Delta V DCS related equipment.

4.2.3.4 RED/BLACK separation requirements do not apply to power cables serving MC&A equipment.

4.2.4 Plant Design

4.2.4.1 No specific assumptions have been made in this group.

4.2.5 Civil/Structural/Architectural

4.2.5.1 Core drills will be required for routing commodities through existing walls or floors, which is covered in C-SOW-K-00009.

4.2.5.2 Assume all anchor bolts used for equipment and commodity supports will be A36 Drillco Maxi bolts. Alternately, Hilti KWIK Bolts-TZ are acceptable for anchoring items within this SOW.

4.2.5.3 Any components inside any equipment like cabinet are the integral parts of that equipment as one unit.

4.2.5.4 Functional Classification for drilling holes in concrete surface is SC.

4.3 HBDER Scope

4.3.1 None.

5.0 REFERENCES

5.1 Drawing List

5.1.1 PUD Project Drawings & Sketches

5.1.1.1 J-J8-K-00016 – Milling and Mixing MCA Control Block Diagram
5.1.1.2 J-J8-K-00017 – Vitrification MCA Control Block Diagram
5.1.1.3 J-J8-K-00018 – Metal Oxidation MCA Control Block Diagram
5.1.1.4 J-J8-K-00025 – Feed Prep MCA Control Block Diagram
5.1.1.5 J-J8-K-00034 – Magazine Loading MCA Control Block Diagram
5.1.1.6 J-J8-K-00035 – Bagless Transfer MCA Control Block Diagram
5.1.1.7 J-J8-K-00036 – Material Receipt MCA Control Block Diagram
5.1.1.8 J-J8-K-00038 – Waste Management MCA Control Block Diagram
5.1.1.9 J-J8-K-00048 – Green Fuel MCA Control Block Diagram
5.1.1.10 J-J8-K-00049 – MC&A Network Block Diagram
5.1.1.11 J-J8-K-00050 – Integrated Control System Network Block Diagram
5.1.1.12 SK-DE-BOP-0005 – Plan View Electrical / Instrumentation Commodities Equipment Location Sketch Elevation -40
5.1.1.13 SK-DE-BOP-0019 – + 15 Elevation, Central Control Room, Electrical and Instrumentation Plan
5.1.1.14 SK-DE-GFDS-0003 – Green Fuel Disassembly Area Facility Layout -40 Level
5.1.1.15 SK-DE-HVAC-0006 – Fan House Electrical Equipment Plan
5.1.1.16 SK-DE-MLS-0005 – Magazine Loading/Canister Loading Layout Electrical and I&C Layout
5.1.1.17 SK-DE-VIT-0009 – Plan View Electrical / Instrumentation Commodities Equipment Location Sketch Elevation -40
5.1.1.18 SK-DE-VIT-0010 – Plan View Electrical/I&C Commodities Location Sketch Elevation -20
5.1.1.19 J-JD-K-00147 – Data Sheet, DCS I/O Cabinet
5.1.1.20 J-JD-K-00148 – Data Sheet, DCS Server/Network Switch Cabinet
5.1.1.21 J-JD-K-00149 – Data Sheet, DCS Operator Workstation

5.1.2 Existing Savannah River Site (SRS) Drawings

5.1.2.1 None

5.2 Design Input Documents

The following Facility Design Description and System Design Descriptions are the baseline documents used to develop this SOW.

5.2.1 Facility Design Description

5.2.1.1 G-FDD-K-00001, Rev B "PUV Facility Design Description"
5.2.1.2 Integrated Control System, FDD Input Draft B, Jan. 4, 2007

5.2.2 System Design Description

5.2.2.1 None.

5.2.3 **Civil/Structural/Architectural**

5.2.3.1 For electrical conduit and equipment supports, use Cookbook C-C1-G-0039, Rev. 0.

5.3 Applicable SRS & Industry Codes, Guides and Standards

5.3.1 Industry Codes and Standards

5.3.1.1 NFPA-70 - National Electrical Code, 2005 Edition

5.3.2 SRS Guides & Standards

5.3.2.1 WSRC-TM-95-1, Standard No. 03010, Rev. 1, "Coring, Chipping, and Drilling in Concrete"
5.3.2.2 WSRC-IM-95-58, Guide No. 03252-G, Rev. 1, "Installation and Testing of Concrete Anchors"
5.3.2.3 WSRC-IM-95-58, Guide No. 16051-G, Rev. 2, "Installation of Electrical Raceway Systems and Cable Trays"
5.3.2.4 WSRC-IM-95-58, Guide No. 16052-G, Rev. 3, "Installation of Electrical Wires, Cables and Terminations"
5.3.2.5 WSRC-IM-95-58, Guide No. 16053-G, Rev. 2, "Installation of Electrical Equipment"
5.3.2.6 WSRC-IM-95-58, Guide No. 16056-G, Rev. 2, "Installation of Grounding Systems"
5.3.2.7 WSRC-IM-95-58, Guide 03251-G, Rev. 1, Concrete Anchors
5.3.2.8 WSRC-IM-95-58, Guide 03252-G, Rev. 1, Installation and Testing of Concrete Anchors
5.3.2.9 WSRC-IM-95-58, Guide 09900-G, Rev. 2, Architectural Field Painting
5.3.2.10 WSRC-IM-95-58, Guide 09901-G, Rev. 2, Protective coatings-Concrete and Masonry

5.4 Related Scopes of Work (SOW)

5.4.1 M-SOW-K-00017, Electrical System- The power distribution panels and UPS equipment installation is described in this related SOW.

5.4.2 J-SOW-K-00005, Material Receipt- This SOW describes the unique features of this building block and the Pu Disposition and CSSC MC&A interface.

5.4.3 C-SOW-K-00009, Rev. 0, Scope of Work for Structural and Architectural Modifications for the K-Area Complex.

5.5 Miscellaneous

5.5.1 J-PMP-K-00001, Control Automation Plan.

5.5.2 S-SRI-K-00005, Safeguard and Security Requirements Identification Document - Project M09A - Plutonium Disposition.

5.5.3 J-PMP-K-00002, Plutonium Disposition Project Material Control and Accountability and Dual Containment/ Surveillance (C/S)

6.0 ATTACHMENTS

6.1 **Attachment 1, ICS and MC&A Bulk Material List (4ppg)**

6.2 **Attachment 2, C/S/A Bulk Material List (1ppg)**

	A	B	C	D	E	F	G	H	I	J	K	L
4				Cable Estimates (Exterior GB)			Shared Rcwy/Tray	Raceway Estimates				
5	Item #	From Equipment	To Equipment	Length (A) (ft)	Qty (A)	Cable size/type	Length (C) (ft)	Length (D) (ft)	Qty (D)	Size/Desc. (D)	Red	Notes/Comments
6		Integrated Control System (ICS)										
7	1	ICS-CAB-800	ICS-CAB-200	160	4	Ethernet fiber 62.5/125 micron multimode		40	1	3" IMC	N	
8	2	ICS-CAB-800	ICS-CAB-200	120				120	1	3/4" IMC	N	
9	3	ICS-CAB-800	Central Control Room OWS	40	2	Ethernet fiber 62.5/125 micron multimode		40	1	3/4" IMC	N	
10	4	ICS-CAB-800	Mag Load Control Room OWS	380	2	Ethernet fiber 62.5/125 micron multimode		380	1	3/4" IMC	N	
11	5	ICS-CAB-800	VIT/M&M Control Room OWS	260	2	Ethernet fiber 62.5/125 micron multimode	40	220	1	1" IMC	N	conduit shared with Item # 1
12	6	ICS-CAB-800	DMO/FP Control Room OWS	290	2	Ethernet fiber 62.5/125 micron multimode	260	30	1	3/4" IMC	N	40' conduit shared with Item #1 220' conduit shared with Item #5
13	7	ICS-CAB-800	Bag xfer/NDA Control Room OWS	120	2	Ethernet fiber 62.5/125 micron multimode	40	80	1	3/4" IMC	N	conduit shared with Item #1
14	8	ICS-CAB-800	Fan House Control Room OWS	1070	2	Ethernet fiber 62.5/125 micron multimode	525	545	1	3/4" IMC	N	conduit shared with tunnel
15	9	ICS-CAB-200	I/O cabinets in melter support room	50	36	Ethernet CAT5e	25	25	18	3/4" IMC	N	
16	10	ICS-CAB-200	ICS-CAB-090	240	2	Ethernet CAT5e		240	1	3/4" IMC	N	
17	11	Central Control Room Network Switch	Central Control Room OWS	30	16	Ethernet CAT5e	15	15	8	3/4" IMC	N	

	A	B	C	D	E	F	G	H	I	J	K	L
5	Item #	From Equipment	To Equipment	Length (A) (ft)	Qty (A)	Cable size/type	Length (C) (ft)	Length (D) (ft)	Qty (D)	Size/Desc. (D)	Rad	Notes/Comments
18	12	Material Control and Accountability (MC&A)										
19	13	Central Control Room MCA-OWS-001	MCA-CAB-001	350	1	Ethernet fiber 62.5/125 micron multimode	280	60	1	2" IMC	Y	
20	14	Vit/Mill & Mix Control Room MCA-OWS-002	MCA-CAB-001	200	1	Ethernet fiber 62.5/125 micron multimode	180	30	1	2" IMC	Y	
21	15	MCA-CAB-002	MCA-CAB-001	400	1	Ethernet fiber 62.5/125 micron multimode	100	290	1	2" IMC	Y	
22	16	MRSS-NCC-001A	MCA-CAB-002 Material Receipt Server	100	1	Ethernet CAT5e	0	90	1	3/4" IMC	Y	
23	17	MRSS-GRIS-001A	MCA-CAB-002 Material Receiptl Server	20	1	Ethernet CAT5e	0	10	1	3/4" IMC	Y	
24	18	MRSS-CALM-001A	MCA-CAB-002 Material Receipt Server	40	1	Ethernet CAT5e	0	30	1	3/4" IMC	Y	
25	19	MCA-CAB-003	MCA-CAB-001	400	1	Ethernet fiber 62.5/125 micron multimode	120	260	1	2" IMC	Y	
26	20	MCA-CAB-004	MCA-CAB-001	400	1	Ethernet fiber 62.5/125 micron multimode	200	180	1	2" IMC	Y	
27	21	GFDS-GRIS-001A	MCA-CAB-004 Green Fuel Server	30	1	Ethernet CAT5e	0	20	1	3/4" IMC	Y	
28	22	GFDS-NCC-001A	MCA-CAB-004 Green Fuel Server	30	1	Ethernet CAT5e	0	20	1	3/4" IMC	Y	
29	23	MCA-CAB-005	MCA-CAB-001	20	1	Ethernet fiber 62.5/125 micron multimode	10	0	0	N/A	Y	
30	24	MCA-CAB-005	ICS-CAB-060	180	1	Ethernet fiber 62.5/125 micron multimode	160	0	0	N/A	Y	
31	25	MCA-CAB-006	MCA-CAB-001 Milling& Mixing Server	20	4	Ethernet CAT5e	10	0	0	N/A	Y	
32	26	MIX-GRIS-001A	MCA-CAB-001 Milling&Mixing Server	100	1	Ethernet CAT5e	60	30	1	3/4" IMC	Y	
33	27	MCA-CAB-007	MCA-CAB-001 Feed Prep Server	280	3	Ethernet CAT5e	235	25	1	3/4" IMC	Y	
34	28	FPS-GRIS-001A	MCA-CAB-001 Feed Prep Server	280	1	Ethernet CAT5e	280	10	1	3/4" IMC	Y	
35	29	FPS-GRIS-001B	MCA-CAB-001 Feed Prep Server	280	1	Ethernet CAT5e	280	10	1	3/4" IMC	Y	
36	30	BTS-CALM-001A	MCA-CAB-001 Bagless Transfer Server	200	1	Ethernet CAT5e	170	10	1	3/4" IMC	Y	

	A	B	C	D	E	F	G	H	I	J	K	L
5	Item #	From Equipment	To Equipment	Length (A) (ft)	Qty (A)	Cable size/type	Length (C) (ft)	Length (D) (ft)	Qty (D)	Size/Desc. (D)	Red	Notes/Comments
37	31	BTS-CALM-001B	MCA-CAB-001 Bagless Transfer Server	200	1	Ethernet CAT5e	170	10	1	3/4" IMC	Y	
38	32	BTS-CALM-001C	MCA-CAB-001 Bagless Transfer Server	200	1	Ethernet CAT5e	170	10	1	3/4" IMC	Y	
39	33	BTS-CALM-001D	MCA-CAB-001 Bagless Transfer Server	200	1	Ethernet CAT5e	170	10	1	3/4" IMC	Y	
40	34	BTS-CALM-001E	MCA-CAB-001 Bagless Transfer Server	200	1	Ethernet CAT5e	170	10	1	3/4" IMC	Y	
41	35	BTS-CALM-001F	MCA-CAB-001 Bagless Transfer Server	200	1	Ethernet CAT5e	170	10	1	3/4" IMC	Y	
42	36	BTS-CALM-001G	MCA-CAB-001 Bagless Transfer Server	200	1	Ethernet CAT5e	170	10	1	3/4" IMC	Y	
43	37	BTS-GRIS-001A	MCA-CAB-001 Bagless Transfer Server	200	1	Ethernet CAT5e	170	10	1	3/4" IMC	Y	
44	38	BTS-GRIS-001B	MCA-CAB-001 Bagless Transfer Server	200	1	Ethernet CAT5e	170	10	1	3/4" IMC	Y	
45	39	MCA-CAB-008	MCA-CAB-001 Bagless Transfer Server	230	3	Ethernet CAT5e	170	40	1	3/4" IMC	Y	
46	40	MCA-CAB-009	MCA-CAB-001 Vitrification Server	20	3	Ethernet CAT5e	10	0	0	N/A	Y	
47	41	MCA-CAB-010	MCA-CAB-001 Oxidation Server	280	3	Ethernet CAT5e	240	20	1	3/4" IMC	Y	
48	42	DMO-GRIS-001A	MCA-CAB-001 Oxidation Server	280	1	Ethernet CAT5e	250	10	1	3/4" IMC	Y	
49	43	DMO-NCC-001A	MCA-CAB-001 Oxidation Server	280	1	Ethernet CAT5e	250	10	1	3/4" IMC	Y	
50	44	WM-OWS-001	WM-CAB-001 Waste Management Server	50	1	Ethernet CAT5e	0	35	1	3/4" IMC	Y	
51	45	WM-SPTR-001	WM-CAB-001 Waste Management Server	50	1	Ethernet CAT5e	0	35	1	3/4" IMC	Y	
52	46	WM-SPTR-002	WM-CAB-001 Waste Management Server	50	1	Ethernet CAT5e	0	35	1	3/4" IMC	Y	
53	47	WM-CAB-002	WM-CAB-001 Waste Management Server	50	1	Ethernet CAT5e	0	35	1	3/4" IMC	Y	
54												

Scope Set: ICS / MC&A **Date:** 3/28/2007

Prepared By: Bart Betz / Dave Day **Reviewed By:** R. Cates

ICS Bulk Material List

Exterior Glovebox Cables

Sum of Qty XGB (ft)	
Ext. Cable Size/Type	Total
Ethernet CAT5e	3,320
8 Fiber Loose Tube□ 62.5/125 um Fiber Optic	6,070
3/C #10	7,920
Grand Total	17,310

All Raceway Types

Sum of Qty Rcwy (ft)	
RCWY	Total
3/4" IMC	3,210
2" IMC	1,885
Grand Total	5,095

All Raceway Types Grouped by Red Designation

Sum of Qty Rcwy (ft)		
Red	RCWY	Total
N	3/4" IMC	3,210
	2" IMC	1,885
Grand Total		5,095

MC&A Bulk Material List

Sum of Qty XGB (ft)	
Ext. Cable Size/Type	Total
Ethernet CAT5e	6,120
8 Fiber Loose Tube□ 62.5/125 um Fiber Optic	1,990
3/C #12	4,320
Grand Total	12,430

Sum of Qty Rcwy (ft)	
RCWY	Total
3/4" IMC	1,905
2" IMC	910
Grand Total	2,815

Sum of Qty Rcwy (ft)		
Red	RCWY	Total
N	3/4" IMC	1,440
Y	3/4" IMC	465
	2" IMC	910
Grand Total		2,815

Consolidated Bulk Material List

Sum of Qty XGB (ft)	
Ext. Cable Size/Type	Total
Ethernet CAT5e	9,440
8 Fiber Loose Tube□ 62.5/125 um Fiber Optic	8,060
3/C #10	7,920
3/C #12	4,320
Grand Total	29,740

Sum of Qty Rcwy (ft)	
RCWY	Total
3/4" IMC	5,115
2" IMC	2,795
Grand Total	7,910

Sum of Qty Rcwy (ft)		
Red	RCWY	Total
N	3/4" IMC	4,650
	2" IMC	1,885
Y	3/4" IMC	465
	2" IMC	910
Grand Total		7,910

6.2 Attachment No. 2

C/S/A Bulk Material List

Note: Table below includes the bulk material for installing/supporting major equipment.

Item No.	Description of Item	Size	Quantity	Remarks
1	Anchor Bolts	½" Dia.	188 each	

PLUTONIUM DISPOSITION PROJECT (U)

Project M09A

SCOPE OF WORK

J-SOW-K-00003 Revision ~~0~~ 1 04/09/07

for

Health and Safety Monitoring System (U)

Originated by: _____ Date: 3-29-07
Bart Betz
I&C Engineer

Reviewed by: _____ Date: 3-29-07
Roderick King
Electrical/I&C Lead

Approved by: _____ Date: 3-29-07
Clayton Holloway
Mechanical Lead

Approved by: _____ FOR Date: 04.02.07
Ghada Elchoufi
C/S/A Lead

Approved by: _____ Date: 3-29-07
Drew Negus
Plant Design Lead

Approved by: _____ Date: 3-29-07
John Hammond
Construction Lead

Approved by: _____ Date: 29 MAR 07
Dave Eisele
~~Construction Lead~~ DESIGN AUTHORITY

Approved by: _____ Date: 4/2/07
B.C. Patel
Project Engineer

UNCLASSIFIED
DOES NOT CONTAIN UNCLASSIFIED CONTROLLED NUCLEAR INFORMATION

DC/RO: EC Zeff III 3/29/07

Revision Page

Revision	Revision Date	Affected Section	Description of Change
0	4/2/07	N/A	Initial Revision
1	4/9/07	N/A	Added Original Attachments (pg.s 15 – 21) to DCR

Table of Contents

Section Page

1.0 SCOPE 4
1.1 General Description 4
1.2 Background 4
2.0 ACRONYMS AND ABBREVIATIONS 4
3.0 DESCRIPTION OF PHYSICAL WORK 5
3.1 Performance Category and Safety Classification (SC, SS, PS, GS) 5
3.2 Mechanical/Nuclear/Process 6
3.3 Instrumentation and Controls 6
3.4 Electrical 10
3.5 Plant Design 10
3.6 Civil/Structural/Architectural 10
4.0 ASSUMPTIONS 11
4.1 General Assumptions 11
4.2 Specific Assumptions 11
4.3 HBDER Scope 12
5.0 REFERENCES 12
5.1 Drawing List 12
5.2 Design Input Documents 13
5.3 Applicable SRS & Industry Codes, Guides and Standards 13
5.4 Related Scopes of Work (SOW) 14
5.5 Miscellaneous 14
6.0 ATTACHMENTS 14
6.1 Attachment 1, Bulk Material List: NIMs (2 pages) 14
6.2 Attachment 2, Bulk Material List: CAMs (2 pages) 14
6.3 Attachment 3, Bulk Material List: Arms (2 pages) 14
6.3 Attachment 4, List of Rad Con Portable Radiological Instruments (1 page) 14

1.0 SCOPE

1.1 General Description

This Scope of Work (SOW) covers the Health and Safety Monitoring System for the Plutonium Disposition Project. Health and Safety Monitoring contains the Radiological Control Subsystem, Occupational Safety Subsystem, Industrial Hygiene Subsystem and the Nuclear Incident Monitoring Subsystem.

1.2 Background

The Office of Environmental Management has approximately 13 metric tons (MT) of plutonium in approximately 21 MT bulk materials without any defined disposition path. The Plutonium Disposition (PUD) Project is critical to meet the Department of Energy's strategic goal of providing a responsible resolution to the permanent disposal of the nation's excess high-level radioactive materials and waste; and to enable the cleanup of Environmental Management sites.

The Plutonium Disposition Facility (PDF) will be located at the K-Area Complex (KAC) to disposition up to approximately 13 Metric Tons (MT) of Environmental Management (EM) owned surplus plutonium. The facility will utilize a vitrification process to vitrify plutonium into a lanthanide borosilicate (LaBS) glass matrix. This glass will be packaged into bagless transfer cans and placed inside a Defense Waste Processing Facility (DWPF) type canister. The canister will be transported to DWPF and filled with High Level Waste (HLW) glass. The DWPF canisters will be stored in the Glass Waste Storage Buildings and later transported to the geologic repository at Yucca Mountain.

This Scope of Work (SOW) has been developed for the purpose of facilitating **construction** cost and schedule estimates for the Conceptual Design Report (CDR) on the PUD project. The input to this SOW was the approved technical baseline consisting of a Facility Design Description (FDD) and associated System Design Descriptions (SDD). Every intent has been made to assure alignment and consistency between this SOW and the appropriate sections of the technical baseline, in order to provide accurate estimates. This SOW is not a PUD technical baseline document. A more detailed description of the system can be found in the associated SDD listed in the reference section.

A HOLD is placed to identify information that is preliminary in nature, results from a design uncertainty, originates from insufficient documentation, needs verification, or identifies a discrepancy. A **TBD** is placed to identify places in the text where numeric values or descriptive information is not available at the time that the current revision of the SOW is released.

2.0 ACRONYMS/ABBREVIATIONS

AMS	Air Migration Study
ARM	Area Radiation Monitor
CAM	Continuous Air Monitor
CDR	Conceptual Design Report
DCS	Distributed Control System
EMT	Electrical Metallic Conduit
FARMS	Facility Area Radiation Monitoring System
FDD	Facility Design Description

GS	General Services
HVAC	Heating, Ventilation and Air Conditioning
IAW	In Accordance With
ICS	Integrated Control System
IMC	Intermediate Metal Conduit
KAC	K-Area Complex
KIS	K-Area Interim Surveillance
NIM	Nuclear Incident Monitor
PC	Performance Category
PCM	Personnel Contamination Monitor
Pu	Plutonium
PUD	Plutonium Disposition
PDF	Plutonium Disposition Facility
RAS	Retrospective Air Sampler
RGS	Rigid Galvanized Steel
RME	Radiation Monitoring Equipment
SC	Safety Class
SCFM	Standard Cubic Feet per Minute
SDD	System Design Description
SOW	Scope Of Work
SRS	Savannah River Site
SS	Safety Significant
SSC	Structure, System, Component
TBD	To Be Determined
TRU	Transuranic Waste
UPS	Uninterruptible Power Supply
VAC	Volt(s) Alternating Current
WSRC	Washington Savannah River Company

3.0 DESCRIPTION OF PHYSICAL WORK

3.1 Performance Category and Safety Classification (SC, SS, PS, GS)

3.1.1 Performance Category

3.1.1.1 The Health and Safety Monitoring System is Performance Category PC-2. **HOLD** (Reference G-FDD-K-00001)

3.1.2 Functional Classification

3.1.2.1 The NIM equipment and associated wiring are safety related and shall be procured, installed and tested IAW project quality assurance program requirements.

A. Nuclear Incident Monitor

1. Functional Classification – Safety Significant (SS)

B. Continuous Air Monitor

1. Functional Classification – Production Support (PS)

C. Area Radiation Monitor

1. Functional Classification – Production Support (PS)

D. Retrospective Air Sampler

1. Functional Classification – General Services (GS)

E. Personnel Contamination Monitor

1. Functional Classification – General Services (GS)

NOTE: The Isokinetic Stack Particulate Monitor is a subsystem of the HVAC System, thus its components are not included within work scope boundaries of this SOW. (It is described in the HVAC Scope of Work M-SOW-K-00020).

3.2 Mechanical/Nuclear/Process

3.2.1 None.

3.3 Instrumentation and Controls

3.3.1 Nuclear Incident Monitor

3.3.1.1 NIM instruments will be installed adjacent to potential incident locations in these areas: Green Fuel Disassembly; Feed Preparation; Oxidation; and Milling & Mixing (refer to layout diagram J-J8-K-00021 and location sketches SK-DE-BOP-0006 & SK-DE-VIT-0010) IAW SRSESM 13096. The NIM Detectors are remotely located in these areas. The NIM Instrument Cabinets are located in Electrical Equipment Room #1 (refer to location sketch SK-DE-BOP-0011). The components of the NIM system are:

A. 24 (total, purchased by Engineering) Mod IV NIM instruments configured as triplets. Each of the above listed areas will have two triplet pairs. NIM instruments installed in triplets require two-out-of-three votes to initiate system alarms.

1. Each NIM Instrument Cabinet will be installed inside a (see-thru) tamper proof enclosure. All 24 NIM Instrument Cabinets (and the NIM Isolation Cabinet) may be installed inside a common enclosure to conserve space, the bounding maximum size to be 96" W x 72" H x 36" D, constructed of expanded metal, or equivalent material, designed to seismic II/I specifications.

B. NIM Isolation Cabinet (1) (refer to location sketch SK-DE-BOP-0011).

C. Remote alarm bells (24) and strobe lights (24) as required to adequately cover the KAC.

D. NIM Interconnections

1. All interconnecting cabling between NIM Detectors, distribution panels, Instrument Cabinets and the Isolation Cabinet are to be

installed in dedicated RGS or IMC conduit. Other radiation monitoring systems may not share NIM system conduit.

2. For cable and raceway quantities refer to Attachment 1.

3.3.1.2 The NIM Isolation Cabinet will provide an isolated discrete output to the ICS as well as provide functionality for system audible and visual alarms.

3.3.2 Continuous Air Monitor

3.3.2.1 CAM Sampling Heads (purchased by Engineering) will be installed in areas occupied by personnel where work is performed that creates or has the potential to create airborne radioactivity during normal operations (refer to layout diagram J-J8-K-00022, Sh. 1 and location sketches SK-DE-BOP-0004, -0005, -0006, -0012 & SK-DE-VIT-0009). The head locations are:

A. TRU Loading (1)

B. Failed Equipment Storage (1)

C. Green Fuel Disassembly (1)

D. Feed Preparation (2 – 1 operations side & 1 maintenance side)

E. Oxidation (2 – 1 operations side & 1 maintenance side)

3.3.2.2 CAM Sampling Heads (purchased by Engineering) will be installed at the boundaries of areas where a power failure or other disruption of engineering controls could result in the release of airborne radioactivity. CAM heads will monitor the HVAC exhaust ducts of these areas. Additionally, for enhanced personnel protection and notification of contamination prior to entry into these areas, CAM heads will be installed to monitor the airlocks of these areas, wherein each CAM head will be installed outside its respective airlock and a sample tube will penetrate the exterior wall in order to sample the area inside the airlock (refer to layout diagram J-J8-K-00022, Sh. 1 and location sketches SK-DE-BOP-0004, -0005, -0006, -0012 & SK-DE-VIT-0009). The head locations are:

A. Green Fuel Disassembly (2 – 1 airlock & 1 duct)

B. Feed Preparation (2 – 1 airlock & 1 duct)

C. Oxidation (2 – 1 airlock & 1 duct)

D. Mixing & Milling (2 – 1 airlock & 1 duct)

E. Vitrification (6 – 4 airlocks & 2 ducts)

Each of the CAM heads listed above will have an In-Line Adapter that allows direct connection to the airlock sample line or HVAC duct.

3.3.2.3 CAM Controllers (purchased by Engineering) provide the operator interface for a network of up to eight Sampling Heads per Controller, thus there will be three networks (to connect 21 Sampling Heads) using a RS-485 communications protocol. The controller locations are:

A. Rad Con Support Space (3) (refer to location sketch SK-DE-BOP-0016).

B. RCO Office (3).

1. The Rad Con Support Space CAM controllers are mirrored by the RCO Office controllers via a RS-232 communications link.

2. The Rad Con Support Space CAM controllers output to the ICS via a RS-232 communications link.

3.3.2.4 Each of the CAM heads requires a Network Tee Box which provides in-line RS-485 and CAM head connections (21 total).

3.3.2.5 Each of the 3 networks requires a Network Terminator (3 total).

3.3.2.6 For cable and raceway quantities refer to Attachment 2.

3.3.2.7 A single vacuum pump will provide the required external airflow (~2 scfm/each) for all 21 CAM heads. The vacuum pump discharge will be connected to the PUD HVAC Main Exhaust Duct (refer to layout diagram J-J8-K-00022, Sh. 2 for P&ID). Additional components required to install the vacuum supply distribution system are:

A. Rotameter (21)

B. Valves:

1. ½" needle (21)
2. ½" ball (1)
3. ½" check (1)

C. Tubing ½" stainless – PS206A (1000')

3.3.3 Area Radiation Monitor

3.3.3.1 Area radiation monitors (purchased by Engineering) will be installed in occupied locations with the potential for an unexpected increase in dose rates and in locations where there is a need for local indication of dose rate prior to personnel entering remote locations. The ARMs will be configured as either high-range or low-range monitors. Configuration details of the 35 ARMs are detailed in layout diagram J-J8-K-00023 (refer to location sketches SK-DE-BOP-0004, -0005, -0006, -0011, -0012, -0014, -0015, SK-DE-VIT-0009 & -0010). The detectors to be used are:

A. High-range detector (4)

B. Low-range detector (31)

3.3.3.2 The ARMs are interconnected to a laptop computer located in the RCO Office which forms a serial network using a RS-232 communications protocol.

3.3.3.3 The ARM laptop computer outputs to the ICS via a RS-232 communications link.

3.3.3.4 Auxiliary audible and visual alarms are located to prevent uninformed entry into zones in alarm condition. Panels with relay internals activate the alarms with logic provided by the ICS. The quantities are:

A. Panels with relay internals (10) (purchased by Engineering) (refer to location sketches SK-DE-BOP-0005, -0006, -0012, -0014, -0016, SK-DE-VIT-0009 & -0010).

B. Auxiliary alarm, combination audible & visual (41).

3.3.3.5 For cable and raceway quantities refer to Attachment 3.

3.3.4 Retrospective Air Sampler

3.3.4.1 Portable RASs (purchased by Engineering) will located in hallways or other areas where the potential for airborne is low or non-existent as determined by the AMS as part of FARMS. Additionally, portable samplers will be employed during maintenance involving breaches of the gloveboxes. Ten (10) portable samplers will be provided to cover the KAC.

3.3.5 Personnel Contamination Monitor

3.3.5.1 Whole body personnel contamination monitors (16) (purchased by Engineering) will be located at the exits from all Contamination and Radiological Buffer Areas where potential for contamination exists to prevent the spread of contamination. (refer to location sketches SK-DE-BOP-0004, -0013, -0014, SK-DE-VIT-0010, P-PG-K-02142 & -02143).

3.3.5.2 The PCMs require 25 cc/min of P-10 gas (10% methane + 90% argon mixture). The components needed to install the P-10 gas distribution system are:

A. Gas cylinder cabinet (16)

B. P-10 gas cylinder, size 1A (32 = 350 day supply)

C. Valves:

1. 1" pressure relief (16)
2. ½" ball (16)

D. Tubing ½" stainless – PS206A (2320') (see Assumption 4.2.1.2).

All purchased by Construction

3.3.6 Rad Con Radiological Instruments

3.3.6.1 The quantities of portable Rad Con instruments and equipment required to support facility operations and maintenance is listed in Attachment 4.

3.3.7 Industrial Hygiene Monitoring Instruments

3.3.7.1 The portable industrial hygiene monitoring instruments and equipment required to support facility operations and maintenance are (Ref. G-FDD-K-00001):

A. Chemical agent (such as glovebox fire suppression agent, possibly FM-200 or Inergen) monitor (TBD)

B. Physical agent monitor (TBD)

C. Flammable gas concentration monitor (TBD)

D. Oxygen deficiency monitor (TBD)

E. Carbon monoxide concentration monitor (TBD)

F. Sound level monitor to support the hearing conservation program (TBD)

3.3.7.2 The cost of the portable industrial hygiene monitoring instruments and equipment is estimated to be $50,000.

3.4 Electrical

3.4.1 Refer to Attachments 1, 2 and 3 for cable and raceway bulk material summary reports (see Assumption 4.2.3.3).

3.4.2 Work Scope includes installation of new grounding pigtails (approx. 10 ft. long with bolted connections) between new permanent electrical equipment and/or skids to the existing ground grid system. Small movable equipment shall be grounded in accordance with code and or industry practices.

3.4.3 NIMs

3.4.3.1 120 VAC power for the NIM Instruments and the NIM Isolation Cabinet is to be installed in dedicated IMC or RGS conduit from the cabinets to the power distribution panel. Power is to be supplied from a dedicated branch of the (UPS) power bus. The NIM circuit is to be clearly marked: "NIM Circuit Power – Notify Custodian and Area Emergency Coordinator before De-energizing".

3.4.4 CAMs

3.4.4.1 Each of the 21 CAM heads requires local 120 VAC (UPS) power.

3.4.4.2 Each of the 6 CAM controllers requires local 120 VAC (UPS) power.

3.4.4.3 The vacuum pump requires local 208 VAC (UPS) power (see assumption 4.2.3.1).

3.4.5 ARMs

3.4.5.1 Each of the 35 ARMs requires local 120 VAC (UPS) power.

3.4.6 PCMs

3.4.6.1 Each of the 16 PCMs requires local 120 VAC power.

3.5 Plant Design

3.5.1 Piping quantities for the CAMs vacuum supply distribution system have been estimated in section 3.3.2.7.

3.5.2 Piping quantities for the PCMs P-10 gas distribution system have been estimated in section 3.3.5.2.

3.6 Civil/Structural/Architectural

3.6.1 Core drills will be required for routing electrical conduit through existing walls or floors. (Note: Installation of new core drills is covered in C-SOW-K-00009).

3.6.2 For electrical conduits and equipment supports, use cookbook No. C-CI-G-0039. For routing and supports for NPS 2" and smaller piping, use cookbook No. C-CH-G-00004.

3.6.3 Provide metal shelving and security cage for NIM electronics units and cabinet. Concept for shelving is 3 tiers, 12" deep, and 14' long. Shelf framework and supports shall be angle iron or tubular steel, anchor bolted to wall. Floor of shelves shall be 12 gauge sheet metal. Front of each shelf shall have a 4" high ledger angle of 1/8" steel plate. Concept for cage is a front section 20' long, 8' high with end walls 2' deep. No top is required. Back and floor will be existing concrete. Cage shall be fabricated from 12 gauge expanded metal with angle iron or tubular steel framework anchored to concrete. Provide (5 each) swinging, lockable doors, 30" wide and 7' tall. All material shall be galvanized or coated.

4.0 ASSUMPTIONS

4.1 General Assumptions

4.1.1 The Construction Agency will be the SRS Construction Group. DS will provide engineering documentation for the installation of this equipment and will rely on the use of SRS Guides and Standards.

4.1.2 SRS Construction Group will procure all bulk materials.

4.1.3 SRS Construction Group will procure all off-the-shelf components and equipment identified on engineering data sheets that do not require testing or quality documentation.

4.1.4 The installer is responsible for providing all equipment/components detailed within this document unless noted otherwise (i.e. purchased by Engineering).

4.2 Specific Assumptions

4.2.1 Mechanical

4.2.1.1 All piping will be per ASME B31.3.

4.2.1.2 Due to limited available total gas cylinder volume a P-10 gas line break will not cause an asphyxiation hazard and thus room oxygen deficiency monitors are not required.

4.2.2 Instrumentation and Controls

4.2.2.1 It is assumed that the placement of the CAM Sampling Head Vacuum Pump, valves, rotameters, quantity and routing of tubing, will be similar to that for the KIS Project.

4.2.2.2 It is assumed that the placement of the PCM P-10 gas distribution system cylinder cabinets, valves, quantity and routing of tubing, will be similar to that for CLWR-TEF. The quantity of ½" stainless tubing is based upon the assumption that the P-10 gas cylinder cabinets are centrally located against the outside facility wall on the 0' level next to the cylinder storage racks.

4.2.2.3 Air monitoring equipment types and locations based upon M&O-PUD-2006-00112.

4.2.2.4 It is assumed that all Pu Vit Facility Occupational Safety and Industrial Hygiene monitoring will be performed using only portable equipment similar to that for present KAC operations.

4.2.2.5 Portable Rad Con instruments and equipment detailed in Attachment 4 and portable industrial hygiene monitoring instruments and equipment will be purchased by Engineering and provided to Operations (i.e. no construction installation scope).

4.2.3 Electrical

4.2.3.1 The CAM Sampling Head Vacuum Pump motor power rating is less than 1 hp.

4.2.3.2 All permanently installed cabling will be routed in protected conduit/tray.

4.2.3.3 Quantities of conduit reported in Attachment 2, Bulk Materials List: CAMs and Attachment 3, Bulk Materials List: ARMs have not been economized for conduit or raceway sharing.

4.2.3.4 Existing grounding grid is intact and adequate for grounding of new equipment.

4.2.4 Plant Design

4.2.4.1 No specific assumptions have been made in this group.

4.2.5 Civil/Structural/Architectural

4.2.5.1 All anchor bolts used for equipment and commodity supports will be A36 Drillco Maxi bolts. Alternatively, cast-in-place anchors with grout sleeves or Hilti Kwik Bolt-TZ are acceptable for anchoring items.

4.2.5.2 Functional Classification for drilling holes in concrete surface is SC.

4.3 HBDER Scope

4.3.1 The addition of a redundant ARMs RS-232 serial network would allow continued operation of the system in the event of primary network failure. It is estimated 4130' additional 1PR #22 TWSH cable is required to accommodate this HBDER Scope item.

4.3.2 The addition of a second (parallel) CAMs vacuum pump would allow continued operation of the system in the event of primary vacuum pump failure or maintenance.

5.0 REFERENCES

5.1 Drawing List

5.1.1 PUD Project Drawings & Sketches

5.1.1.1 J-J8-K-00021 – Nuclear Incident Monitoring System (NIMS) Layout
5.1.1.2 J-J8-K-00022 – Constant Air Monitoring System (CAMS) Layout
5.1.1.3 J-J8-K-00023 – Area Radiation Monitoring System (ARMS) Layout
5.1.1.4 SK-DE-BOP-0004 – Plan View Electrical/Instrumentation Commodities Equipment Location Sketch Elevation -40
5.1.1.5 SK-DE-BOP-0005 – Plan View Electrical/Instrumentation Commodities Equipment Location Sketch Elevation -40

5.1.1.6 SK-DE-BOP-0006 – Plan View Electrical/Instrumentation Commodities Equipment Location Sketch Elevation -40
5.1.1.7 SK-DE-BOP-0011 – Plan View Electrical/I&C Commodities Location Sketch Elevation -20
5.1.1.8 SK-DE-BOP-0012 – Plan View Electrical/I&C Commodities Location Sketch Elevation -20
5.1.1.9 SK-DE-BOP-0013 – Plan View Electrical/I&C Commodities Location Sketch Elevation -20
5.1.1.10 SK-DE-BOP-0014 – Plan View Electrical/I&C Commodities Location Sketch Elevation -20
5.1.1.11 SK-DE-BOP-0015 – Plan View Electrical/I&C Commodities Location Sketch Elevation -20
5.1.1.12 SK-DE-BOP-0016 – Plan View Electrical/I&C Commodities Location Sketch Elevation -20
5.1.1.13 SK-DE-VIT-0009 – Plan View Electrical/Instrumentation Commodities Equipment Location Sketch Elevation -40
5.1.1.14 SK-DE-VIT-0010 – Plan View Electrical/I&C Commodities Location Sketch Elevation -20
5.1.1.15 P-PG-K-02142 – General Arrangement Plan at Level -20
5.1.1.16 P-PG-K-02143 – General Arrangement Plan at Level -40

5.1.2 Existing Savannah River Site (SRS) Drawings

5.1.2.1 None

5.2 Design Input Documents

The following Facility Design Description and System Design Descriptions are the baseline documents used to develop this SOW.

5.2.1 Facility Design Description

5.2.1.1 G-FDD-K-00001, Rev B "PUV Facility Design Description"
5.2.1.2 Health and Safety Monitoring System, FDD Input Draft B, Aug. 24, 2006

5.2.2 System Design Description

5.2.2.1 None.

5.3 Applicable SRS & Industry Codes, Guides and Standards

5.3.1 Industry Codes and Standards

5.3.1.1 ASME B31.3, 2006 - Chemical Plant and Petroleum Refinery Piping
5.3.1.2 NFPA-70 - National Electrical Code, 2005 Edition

5.3.2 SRS Guides & Standards

5.3.2.1 WSRC-TM-95-1, Standard No. 13096, Rev. 5, "Field Installation of Nuclear Incident Monitor (NIM) (U)"
5.3.2.2 WSRC-TM-95-1, Standard No. 03010, Rev. 1, "Coring, Chipping, and Drilling in Concrete"
5.3.2.3 WSRC-IM-95-58, Guide No. 03252-G, Rev. 1, "Installation and Testing of Concrete Anchors"
5.3.2.4 WSRC-IM-95-58, Guide No. 15060-G, Rev. 5, "Application of ASME B31.3"

5.3.2.5 WSRC-IM-95-58, Guide No. 15980-G, Rev. 3, "Installation and Calibration of Instruments"
5.3.2.6 WSRC-IM-95-58, Guide No. 16051-G, Rev. 2, "Installation of Electrical Raceway Systems and Cable Trays"
5.3.2.7 WSRC-IM-95-58, Guide No. 16052-G, Rev. 3, "Installation of Electrical Wires, Cables and Terminations"
5.3.2.8 WSRC-IM-95-58, Guide No. 16053-G, Rev. 2, "Installation of Electrical Equipment"
5.3.2.9 WSRC-IM-95-58, Guide No. 16056-G, Rev. 2, "Installation of Grounding Systems"

5.4 Related Scopes of Work (SOW)

5.4.1 M-SOW-K-00017, Electrical System- The power distribution panels and UPS equipment installation is described in this related SOW.

5.4.2 M-SOW-K-00020, HVAC System- The CAMs sample the process room HVAC exhaust ducts as described in Section 3.3.2.2. (additionally the Isokinetic Stack Particulate Monitor is described in this related SOW).

5.4.3 J-SOW-K-00002, Integrated Control System- Alarms for these systems will be connected to the ICS as described in this related SOW.

5.5 Miscellaneous

5.5.1 M&O-NMM-2006-00011, K Area Complex Annual Review of Monitoring System (FARMS).
5.5.2 M&O-NMM-2006-00089, Preliminary Radiological Design Summary Report – Plutonium Vitrification Project (U).
5.5.3 M&O-PUD-2006-00004, Pu Disposition Project - Preliminary Discussion of Functional Classification of Pu Vit Facility Systems.
5.5.4 M&O-PUD-2006-00044, Project M09A, Pu Disposition Air Monitoring Kickoff.
5.5.5 M&O-PUD-2006-00093, Pu Disposition Project - Air Monitoring System Assumptions & Design Input for Continuous Air Monitors.
5.5.6 M&O-PUD-2006-00112, Pu Disposition Project – Meeting Minutes for Rad Con Review of Plutonium Vitrification Facility (-20' and -40' levels).

6.0 ATTACHMENTS

6.1 Attachment 1, Bulk Material List: NIMs
6.2 Attachment 2, Bulk Material List: CAMs
6.3 Attachment 3, Bulk Material List: ARMs
6.4 Attachment 4, List of Rad Con Portable Radiological Instruments

J-SOW-K-00003 Rev. 1
ATTACHMENT No. _1__
(Bulk Material Summary)

Scope Set: Health & Safety Monitoring: NIMs

Date: 3/21/2007

Prepared By: Bart Betz

Reviewed By: R. King

Exterior Glovebox Cables

Sum of Qty XGB (ft)	
Ext. Cable Size/Type	Total
9/C #20	4,200
2/C #18	40
3/C #14	360
2/C #14	2,400
Grand Total	7,000

All Raceway Types

Sum of Qty Rcwy (ft)	
RCWY	Total
3/4" IMC	2,670
1-1/2" IMC	600
Grand Total	3,270

Description: Health and Safety Monitoring for NIMs Bulk Materials, Cable and Conduit
Reference: J-J8-K-00021

Item #	From Equipment	To Equipment	Cable Estimates (Exterior GB)			GB Pentr	(Interior. GB)	Shared Rcwy/Tray	Raceway Estimates				
			Length (A) (ft)	Qty (A)	Cable size/type	Conn. (Qty)	Length (B) (ft)	Length (C) (ft)	Length (D) (ft)	Qty (D)	Size/Desc. (D)	Red	Notes/Comments
1	NIMs in Electrical Room 1	HM-DET-001, -002, -003, -004, -005, -006	290	6	9/C #20				280	1	1-1/2" IMC		Belden 83609
2	NIMs in Electrical Room 1	HM-DET-007, -008, -009, -010, -011, -012	120	6	9/C #20				110	1	1-1/2" IMC		Belden 83609
3	NIMs in Electrical Room 1	HM-DET-013, -014, -015, -016, -017, -018	120	6	9/C #20				110	1	1-1/2" IMC		Belden 83609
4	NIMs in Electrical Room 1	HM-DET-019, -020, -021, -022, -023, -024	110	6	9/C #20				100	1	1-1/2" IMC		Belden 83609
5	NIMs	HM-CAB-001	15	24	9/C #20				10	24	3/4" IMC		Belden 83609
6	lighting panel	NIMs	15	24	3/C #14				10	24	3/4" IMC		
7	HM-CAB-001	remote bells/lights	100	24	2/C #14				90	24	3/4" IMC		
8	HM-CAB-001	ICS-CAB-050	40	1	2/C #18				30	1	3/4" IMC		

J-SOW-K-00003 Rev. 1
ATTACHMENT No. _2__
(Bulk Material Summary)

Scope Set: Health & Safety Monitoring: CAMs

Date: 3/21/2007

Prepared By: Bart Betz

Reviewed By: R. King

Exterior Glovebox Cables

Sum of Qty XGB (ft)	
Ext. Cable Size/Type	Total
1PR #22 TWSH	3,650
1/C #12 THWN	2,730
Grand Total	6,380

All Raceway Types

Sum of Qty Rcwy (ft)	
RCWY	Total
3/4" IMC	3,170
Grand Total	3,170

Description: Health and Safety Monitoring for CAMs Bulk Materials, Cable and Conduit
Reference: J-J8-K-00022

Item #	From Equipment	To Equipment	Cable Estimates (Exterior GB)			GB Pentr	(Interior. GB)	Shared Rcwy/Tray	Raceway Estimates				
			Length (A) (ft)	Qty (A)	Cable size/type	Conn. (Qty)	Length (B) (ft)	Length (C) (ft)	Length (D) (ft)	Qty (D)	Size/Desc. (D)	Red	Notes/Comments
1	HM-MON-003A	HM-CAM-001	340	1	1PR #22 TWSH				330	1	3/4" IMC		
2	HM-CAM-001	HM-CAM-002	100	1	1PR #22 TWSH				90	1	3/4" IMC		
3	HM-CAM-002	HM-CAM-007	130	1	1PR #22 TWSH				120	1	3/4" IMC		
4	HM-CAM-007	HM-CAM-008	15	1	1PR #22 TWSH				5	1	3/4" IMC		
5	HM-CAM-008	HM-CAM-009	80	1	1PR #22 TWSH				70	1	3/4" IMC		
6	HM-CAM-009	HM-CAM-010	55	1	1PR #22 TWSH				45	1	3/4" IMC		
7	HM-MON-002A	HM-CAM-003	140	1	1PR #22 TWSH				130	1	3/4" IMC		
8	HM-CAM-003	HM-CAM-004	15	1	1PR #22 TWSH				5	1	3/4" IMC		
9	HM-CAM-004	HM-CAM-005	100	1	1PR #22 TWSH				90	1	3/4" IMC		
10	HM-CAM-005	HM-CAM-006	55	1	1PR #22 TWSH				45	1	3/4" IMC		
11	HM-CAM-006	HM-CAM-013	280	1	1PR #22 TWSH				270	1	3/4" IMC		
12	HM-CAM-013	HM-CAM-014	15	1	1PR #22 TWSH				5	1	3/4" IMC		
13	HM-CAM-014	HM-CAM-015	90	1	1PR #22 TWSH				80	1	3/4" IMC		
14	HM-MON-001A	HM-CAM-011	190	1	1PR #22 TWSH				180	1	3/4" IMC		
15	HM-CAM-011	HM-CAM-012	15	1	1PR #22 TWSH				5	1	3/4" IMC		
16	HM-CAM-012	HM-CAM-016	85	1	1PR #22 TWSH				75	1	3/4" IMC		
17	HM-CAM-016	HM-CAM-017	110	1	1PR #22 TWSH				100	1	3/4" IMC		
18	HM-CAM-017	HM-CAM-018	175	1	1PR #22 TWSH				165	1	3/4" IMC		
19	HM-CAM-018	HM-CAM-019	160	1	1PR #22 TWSH				150	1	3/4" IMC		
20	HM-CAM-019	HM-CAM-020	15	1	1PR #22 TWSH				5	1	3/4" IMC		
21	HM-CAM-020	HM-CAM-021	15	1	1PR #22 TWSH				5	1	3/4" IMC		
22	HM-MON-001A, -002A, -003A	HM-MON-001B, -002B, -003B	350	3	1PR #22 TWSH				340	1	3/4" IMC		
23	HM-MON-001A, -002A, -003A	ICS-CAB-050	140	3	1PR #22 TWSH				130	1	3/4" IMC		
24	lighting panel	HM-P-001	60	3	1/C #12 THWN				50	1	3/4" IMC		
25	lighting panel	HM-MON-001A, -002A, -003A	50	3	1/C #12 THWN				40	1	3/4" IMC		
26	lighting panel	HM-CAM-001	50	3	1/C #12 THWN				40	1	3/4" IMC		
27	lighting panel	HM-CAM-002	50	3	1/C #12 THWN				40	1	3/4" IMC		
28	lighting panel	HM-CAM-003, -004	50	3	1/C #12 THWN				40	1	3/4" IMC		
29	lighting panel	HM-CAM-005	50	3	1/C #12 THWN				40	1	3/4" IMC		
30	lighting panel	HM-CAM-006	50	3	1/C #12 THWN				40	1	3/4" IMC		
31	lighting panel	HM-CAM-007, -008	50	3	1/C #12 THWN				40	1	3/4" IMC		
32	lighting panel	HM-CAM-009	50	3	1/C #12 THWN				40	1	3/4" IMC		
33	lighting panel	HM-CAM-010	50	3	1/C #12 THWN				40	1	3/4" IMC		
34	lighting panel	HM-CAM-011, -012	50	3	1/C #12 THWN				40	1	3/4" IMC		
35	lighting panel	HM-CAM-013, -014	50	3	1/C #12 THWN				40	1	3/4" IMC		
36	lighting panel	HM-CAM-015	50	3	1/C #12 THWN				40	1	3/4" IMC		
37	lighting panel	HM-CAM-016	50	3	1/C #12 THWN				40	1	3/4" IMC		
38	lighting panel	HM-CAM-017	50	3	1/C #12 THWN				40	1	3/4" IMC		
39	lighting panel	HM-CAM-018, -020	50	3	1/C #12 THWN				40	1	3/4" IMC		
40	lighting panel	HM-CAM-019, -021	50	3	1/C #12 THWN				40	1	3/4" IMC		
41	lighting panel	HM-MON-001B, -002B, -003B	50	3	1/C #12 THWN				40	1	3/4" IMC		

J-SOW-K-00003 Rev. 1
ATTACHMENT No. _3__
(Bulk Material Summary)

Scope Set: Health & Safety Monitoring: ARMs

Date: 3/21/2007

Prepared By: Bart Betz

Reviewed By: R. King

Exterior Glovebox Cables

Sum of Qty XGB (ft)	
Ext. Cable Size/Type	Total
1PR #22 TWSH	4,130
1/C #12 THWN	4,650
Grand Total	8,780

All Raceway Types

Sum of Qty Rcwy (ft)	
RCWY	Total
3/4" IMC	4,990
Grand Total	4,990

Description: Health and Safety Monitoring for ARMs Bulk Materials, Cable and Conduit
Reference: J-J8-K-00023

Item #	From Equipment	To Equipment	Cable Estimates (Exterior GB)			GB Pentr	(Interior, GB)	Shared Rcwy/Tray	Raceway Estimates				
			Length (A) (ft)	Qty (A)	Cable size/type	Conn. (Qty)	Length (B) (ft)	Length (C) (ft)	Length (D) (ft)	Qty (D)	Size/Desc. (D)	Red	Notes/Comments
1	HM-RI-001	HM-RE-001	460	1	1PR #22 TWSH				450	1	3/4" IMC		
2	HM-RE-001	HM-RE-002	60	1	1PR #22 TWSH				50	1	3/4" IMC		
3	HM-RE-002	HM-RE-003	50	1	1PR #22 TWSH				40	1	3/4" IMC		
4	HM-RE-003	HM-RE-004	60	1	1PR #22 TWSH				50	1	3/4" IMC		
5	HM-RE-004	HM-RE-005	290	1	1PR #22 TWSH				280	1	3/4" IMC		
6	HM-RE-005	HM-RE-006	80	1	1PR #22 TWSH				80	1	3/4" IMC		
7	HM-RE-006	HM-RE-007	250	1	1PR #22 TWSH				240	1	3/4" IMC		
8	HM-RE-007	HM-RE-008	310	1	1PR #22 TWSH				300	1	3/4" IMC		
9	HM-RE-008	HM-RE-010	50	1	1PR #22 TWSH				40	1	3/4" IMC		
10	HM-RE-009	HM-RE-011	80	1	1PR #22 TWSH				70	1	3/4" IMC		
11	HM-RE-011	HM-RE-012	100	1	1PR #22 TWSH				90	1	3/4" IMC		
12	HM-RE-012	HM-RE-015	110	1	1PR #22 TWSH				100	1	3/4" IMC		
13	HM-RE-015	HM-RE-013	70	1	1PR #22 TWSH				60	1	3/4" IMC		
14	HM-RE-013	HM-RE-014	70	1	1PR #22 TWSH				6	1	3/4" IMC		
15	HM-RE-014	HM-RE-016	70	1	1PR #22 TWSH				60	1	3/4" IMC		
16	HM-RE-015	HM-RE-016	70	1	1PR #22 TWSH				60	1	3/4" IMC		
17	HM-RE-016	HM-RE-017	70	1	1PR #22 TWSH				60	1	3/4" IMC		
18	HM-RE-017	HM-RE-018	250	1	1PR #22 TWSH				240	1	3/4" IMC		
19	HM-RE-018	HM-RE-019	210	1	1PR #22 TWSH				200	1	3/4" IMC		
20	HM-RE-019	HM-RE-022A	170	1	1PR #22 TWSH				160	1	3/4" IMC		
21	HM-RE-022A	HM-RE-022B	5	1	1PR #22 TWSH				1	1	3/4" IMC		
22	HM-RE-022B	HM-RE-021A	90	1	1PR #22 TWSH				80	1	3/4" IMC		
23	HM-RE-021A	HM-RE-021B	5	1	1PR #22 TWSH				1	1	3/4" IMC		
24	HM-RE-021B	HM-RE-024	90	1	1PR #22 TWSH				80	1	3/4" IMC		
25	HM-RE-024	HM-RE-023A	60	1	1PR #22 TWSH				50	1	3/4" IMC		
26	HM-RE-023A	HM-RE-023B	5	1	1PR #22 TWSH				1	1	3/4" IMC		
27	HM-RE-023B	HM-RE-029	70	1	1PR #22 TWSH				60	1	3/4" IMC		
28	HM-RE-029	HM-RE-030	60	1	1PR #22 TWSH				50	1	3/4" IMC		
29	HM-RE-030	HM-RE-031	60	1	1PR #22 TWSH				50	1	3/4" IMC		
30	HM-RE-031	HM-RE-028	95	1	1PR #22 TWSH				85	1	3/4" IMC		
31	HM-RE-028	HM-RE-027	60	1	1PR #22 TWSH				50	1	3/4" IMC		
32	HM-RE-027	HM-RE-026	90	1	1PR #22 TWSH				80	1	3/4" IMC		
33	HM-RE-026	HM-RE-025	80	1	1PR #22 TWSH				70	1	3/4" IMC		
34	HM-RE-025	HM-RE-020A	185	1	1PR #22 TWSH				175	1	3/4" IMC		
35	HM-RE-020A	HM-RE-020B	5	1	1PR #22 TWSH				1	1	3/4" IMC		
36	HM-RI-001	ICS-CAB-050	290	1	1PR #22 TWSH				280	1	3/4" IMC		
37	lighting panels	individual ARMs	50	93	1/C #12 THWN				40	31	3/4" IMC		

12/18/2006 01:52 PM

To Barton Betz/SUB/Srs

cc Terese Henson/WSRC/Srs@Srs, Charles Warren/WSRC/Srs@Srs

Subject Preliminary PuVit RadCon Equipment List

Based on our 12/01/06 meeting and conversations with NMM RadCon personnel, here is the preliminary radiological equipment list for the PuVit Project:

Air Sampling

Motor Air Pumps - 15
Staplex Impactors - 5
SKC Lapel Pumps (5/pack) - 2

Portable Survey Instruments

Alpha Survey - 6
Beta-gamma Survey - 6

Dose Rate Instruments

RO-20 - 6
Bicron Micro-rem - 4
Teletector - 3
Neutron Rem Ball - 6

Count Room Equipment

HandECounter - 5
Canberra filter paper scanner - 2

Radioactive Sources

for count room instruments - 2
for portable survey instruments - 2

Personnel Monitoring

PCMs - 16
Count Rate Meters - 30

Dosimetry

EPD Model Mk-2 - 20

If these instruments are also for the D&D effort on -20 and -40 levels, then some categories will be higher (I need input from Terese and Rick as to how many RadCon Inspectors it will take for that work, and pro-rate the instrumentation numbers accordingly). The number of PCMs may be reduced (two are currently specifed for each location) if a set of PCMs is within reasonable walking distance from a single PCM station. However, this should give you a starting point, call me if you have any questions.

PLUTONIUM DISPOSITION PROJECT (U)

Project M09A

SCOPE OF WORK

J-SOW-K-00005, Revision 0

for

Material Receipt and Storage System (U)

(MRSS)

Originated by: Dave H. Day — Date: 3-29-2007
Dave H. Day
Control Systems Engineer

Reviewed by: Randall Cates — Date: 3-29-2007
Randall Cates
Electrical Designer

Approved by: Clayton Holloway — Date: 4-2-07
Clayton Holloway
Mechanical Lead

Approved by: Randall Cates for Rod King — Date: 4-4-07
Roderick King
Electrical/I&C Lead

Approved by: FOR — Date: 04.04.07
Ghada Elchouli
C/S/A Lead

Approved by: James Plumley for D.N. — Date: 4.4.07
Drew Negus
Plant Design Lead

Approved by: B.C. Patel — Date: 4/4/07
B.C. Patel
Project Engineer

WB Hogan for JH. — 4/4/07
CONSTRUCTION

UNCLASSIFIED
DOES NOT CONTAIN UNCLASSIFIED
CONTROLLED NUCLEAR INFORMATION
DC/RO: D. D. [illegible]
4 APR 2007

PLUTONIUM DISPOSITION PROJECT (U)

Project M09A

SCOPE OF WORK

J-SOW-K-00005, Revision 0

For

Material Receipt and Storage System (U)
(MRSS)

Revision Page

Revision	Revision Date	Affected Section	Description of Change
0	4/4/07	N/A	Initial Revision

Table of Contents

Section Page

1.0 SCOPE 4
1.1 General Description 4
1.2 Background 4
2.0 ACRONYMS/ABBREVIATIONS 5
3.0 DESCRIPTION OF PHYSICAL WORK 6
3.1 Performance Category and Functional Classification (SC, SS, PS, GS) 6
3.2 Mechanical/Nuclear/Process 6
3.3 Instrumentation and Controls 6
3.4 Electrical 8
3.5 Plant Design 8
3.6 Civil/Structural/Architectural 8
4.0 ASSUMPTIONS 9
4.1 General Assumptions 9
4.2 Specific Assumptions 9
4.3 High Business Decision Range Estimate (HBDR) 10
5.0 Technology Development Issues 10
6.0 REFERENCES 10
6.1 Drawing List 10
6.2 Design Input Documents 11
6.3 Applicable SRS & Industry Codes, Guides and Standards 11
6.4 Related Scopes of Work (SOW) 13
7.0 ATTACHMENTS 13
7.1 Attachment No.1, C/S/A Bulk Material List
7.2 Attachment No.2, Instrumentation and Controls Bulk Material List

1.0 SCOPE

1.1 General Description

This Scope of Work (SOW) covers the Material Receipt Building Block (BB) for the Plutonium Disposition Project. The Material Receipt and Storage System will receive SNM bearing shipping packages, perform inspection and acceptance of the packages, unpack the shipping package, enter the SNM into the facility accountability system, and store the SNM until ready for processing.

This Scope of Work primarily involves Material Control and Accountability (MC&A) to track and control SNM as it traverses from Material Receipt to the Pu Vit process areas.

1.2 Interface with Container Surveillance and Storage Capability (CSSC) Project

The Pu Vit Facility CD-0 Material Receipt and Storage System (MRSS) function describes the receipt of material at the Savannah River Site KAC from sites throughout the DOE complex as the vitrification process feedstock. The material is described as received, unpacked, measured and stored prior to introduction to the vitrification process. These capabilities, although not all at potentially the required production levels of Pu Vitrification, are scheduled to exist in KAC through the operation of K-Area Material Storage (KAMS) and the projected operation of CSSC. Duplication of these MRSS capabilities by the Pu Disposition Project would be difficult to justify economically and difficult to locate in the increasingly crowded 0' level of KAC. The Pu Disposition Project developed an economical solution without unduly impacting the CSSC Project or KAC facilities/operations. Consequently, a Memorandum of Understanding (MOU) was initiated and approved by KIS, CSSC and Pu Disposition management to allow the Pu Disposition Project to augment and share the existing CSSC MC&A equipment. Refer to Memorandum of Understanding Between KAC, CSSC Project and Pu Disposition Project, M&O-NMM-2006-00122, Rev. 0.

1.3 Background

The Office of Environmental Management has approximately 13 metric tons (MT) of plutonium in approximately 21 MT bulk materials without any defined disposition path. The Plutonium Disposition (PUD) Project is critical to meet the Department of Energy's strategic goal of providing a responsible resolution to the permanent disposal of the nation's excess high-level radioactive materials and waste; and to enable the cleanup of Environmental Management sites.

The Plutonium Disposition Facility (PDF) will be located at the K-Area Complex (KAC) to disposition up to approximately 13 Metric Tons (MT) of Environmental Management (EM) owned surplus plutonium. The facility will utilize a vitrification process to vitrify plutonium into a lanthanide borosilicate (LaBS) glass matrix. This glass will be packaged into bagless transfer cans and placed inside a Defense Waste Processing Facility (DWPF) type canister. The canister will be transported to DWPF and filled with High Level Waste (HLW) glass. The DWPF canisters will be stored in the Glass Waste Storage Buildings and later transported to the geologic repository at Yucca Mountain.

This Scope of Work (SOW) has been developed for the purpose of facilitating **construction** cost and schedule estimates for the Conceptual Design Report (CDR) on the PUD project. The input to this SOW was the approved technical baseline consisting of a Facility Design Description (FDD) and associated System Design Descriptions

(SDD). Every intent has been made to assure alignment and consistency between this SOW and the appropriate sections of the technical baseline, in order to provide accurate estimates. This SOW is not a PUD technical baseline document. A more detailed description of the system can be found in the associated SDD listed in the reference section.

A HOLD is placed to identify information that is preliminary in nature, results from a design uncertainty, originates from insufficient documentation, needs verification, or identifies a discrepancy. A **TBD** is placed to identify places in the text where numeric values or descriptive information is not available at the time that the current revision of the SOW is released.

2.0 ACRONYMS/ABBREVIATIONS

AC	Alternating Current
ACS	Access Control System
AIS	Automated Information System
AMS	Automated Monitoring System
APNMC	Active/Passive Neutron Multiplicity Counter
AWG	American Wire Gauge
BB	Building Block
CCC	Core Component Container
CCTV	Closed Circuit Television
CDIN	Classified Distributive Information Network
CIC	Container In Container
CSSC	Container Surveillance and Storage Capability (CSSC)
D&R	Demolition and Removal
DCS	Distributed Control System
DFA	Driver Fuel Assembly
DMO	Direct Metal Oxidation
DOT	Department of Transportation
DS	Design Services
DWPF	Defense Waste Processing Facility
ECF	Entry Control Facility
EMT	Electrical Metallic Conduit
E3S	Electronic Safeguards and Security System
GHM	Gamma Holdup Monitor
GIS	Gamma Isotopic System
GS	General Services
HEPA	High-Efficiency Particulate Air (filter)
HUFP	Hanford Unirradiated Fuel Package
HVAC	Heating, Ventilation and Air Conditioning
IA	Implementing Agency
IEEE	Institute of Electrical and Electronic Engineers
IMC	Intermediate Metallic Conduit
KAC	K-Area Complex
LaBS	Lanthanide Borosilicate
LLW	Low Level Waste
MC&A	Material Control and Accountability
NMC	Neutron Multiplicity Counter
MOX	Mixed Oxide Fuel Fabrication Facility
MPC&A	Material Protection Control and Accountability
MRSS	Material Receipt and Storage System
MT	Modification Traveler
NFPA	National Fire Protection Association
PAN	Passive/Active Neutron Counter

PC	Performance Category
PC&S	Process and Control Services Department
PIDAS	Perimeter Intrusion Detection and Assessment System
PU	Plutonium
PUD	Plutonium Disposition
PuVit	Plutonium Vitrification
SC	Safety Class
SDD	System Design Description
SOW	Scope Of Work
SRID	Safeguards and Security Requirements Identification Document
SRS	Savannah River Site
S&S	Safeguards & Security
SS	Safety Significant
SSC	Structure, System, Component
TBD	To Be Determined
TID	Tamper Indicating Device
UCNI	Unclassified Controlled Nuclear Information
UNO	Unless Noted Otherwise
WBS	Work Breakdown Structure
WSRC	Washington Savannah River Company

3.0 DESCRIPTION OF PHYSICAL WORK

3.1 Performance Category and Functional Classification (SC,SS,PS,GS)

3.1.1 Performance Category

3.1.1.1 The Material Control and Accountability System is Performance Category PC-1. (Refer to X-SYD-K-00002)

3.1.2 Functional Classification

3.1.2.1 The systems in this SOW shall be designed in accordance with the requirements of WSRC Manual WSRC-E7, Conduct of Engineering and Technical Support Procedure 2.25, Rev. 14, “Functional Classification”.

3.1.2.2 The Material Control and Accountability System is Functional Classification-Production Support (PS)

3.2 Mechanical/Nuclear/Process

3.2.1 Piping

3.2.1.1 There are no specific requirements applicable to this category.

3.3 Instrumentation and Controls

3.3.1 Integrated Control System (ICS)

3.3.1.1 There will be some interaction between the MC&A system and the ICS (Emerson Delta V) system for operational, controls and criticality considerations as described in the Control Automation Plan, J-PMP-K-00001. The method of interaction will be provided through the use of isolated discrete I/O on both the MC&A system and the ICS. The MC&A system will turn on or off a discrete output from MC&A I/O cabinet, MCA-CAB-005, based upon process conditions, that will be connected to a discrete

input on the ICS Miscellaneous I/O cabinet, ICS-CAB-060. This discrete input will be used as a permissive in the ICS system programming. Even though the MC&A system is classified as a ("Red") system, the ICS will, through the use of a qualified electro-optic isolator, remain an unclassified ("Black") system. Both cabinets, MCA-CAB-005 and ICS-CAB-060, are located in the Melter I/O Support Room on the -20 elevation.

3.3.2 Material Control and Accountability (MC&A)

The following MC&A equipment will be added by the Pu Disposition Project to the CSSC operational area:

3.3.2.1 One Active/Passive Neutron Multiplicity Counter (APNMC), Reference Data Sheet J-JD-K-00059.

3.3.2.2 One Gamma Isotopic System (GIS), Reference Data Sheet J-JD-K-00072.

3.3.2.3 Two Calorimeters (CALM), Reference Data Sheet J-JD-K-00061.

3.3.2.4 One 3013 Weigh Scale (SCL), Reference Data Sheet J-JD-K-00058.

3.3.2.5 One Barcode Reader (RDR), Reference Data Sheet J-JD-K-00060.

3.3.2.6 One Miscellaneous Field Instrumentation Rack (CAB), Reference Data Sheet J-JD-K-TBD.

3.3.2.7 The following MC&A instrumentation is existing in CSSC and will be shared between CSSC and the Pu Disposition Project. The below items are procured and installed by the CSSC Project.

One Calorimeter

One Gamma Isotopic System

One Neutron Multiplicity Counter

One Scale

One Barcode Reader

3.3.2.8 Non-power feed cables and equipment associated with the MC&A system are designated as "Red" and shall be installed per requirements of S-SRI-K-00005 (e.g. marking, separation). Additionally, cables and associated raceway shall be labeled and inspected per project security plan documents. Refer to MC&A Network Block Diagram, J-J8-K-00049.

3.3.2.9 Pu Disposition NDA equipment will be added to the CSSC Area at 0' level. Refer to drawing SK-DE-MRSS-0002 for equipment locations.

3.3.2.10 One 7' standard 19" Hoffman Rack, MC&A-CAB-002, will be installed at the outside wall of the NDA Room. This rack contains all of the MC&A network electronics, including a data network server/switch and weigh scale/barcode reader interface electronics. This rack will be connected by fiber optic cable to the Main Server Cabinet, MCA-CAB-001 located in the Melter and I/O Support Room on the -20' level.

3.3.2.11 One Active/Passive Neutron Multiplicity Counter, MRSS-NCC-001 and one APNMC Computer Rack, MRSS-NCC-001A will be installed for measuring neutron activity of 3013 containers. MRSS-NCC-001A will be vendor cable-connected to MRSS-NCC-001, powered by 120VAC/480VA power and will have CAT 5e cable connections to MCA-CAB-002. Refer to Data Sheet J-JD-K-00059 and drawing J-J8-K-00036.

3.3.2.12 One Gamma Isotopic System, MRSS-GRIS-001 and one GIS Computer Rack, MRSS-GRIS-001A will be installed for Gamma Isotopic measurement of 3013 containers. MRSS-GRIS-001A will be vendor cable-connected to MRSS-GRSS-001 and powered by120VAC/1200VA power and will have CAT 5e cable connections to MCA-CAB-002. Refer to data sheets J-JD-K-00072 and drawing J-J8-K-00036.

3.3.2.13 One Precision Weigh Scale, MRSS-SCL-001, will be installed to weigh 3013 containers. This scale will be 120VAC/120VA power cord/receptacle connected and will have CAT 5e cable connections to MCA-CAB-002. Refer to Data Sheet J-JD-K-00158 and drawing J-J8-K-00036..

3.3.2.14 Two Calorimeters, MRSS-CALM-001 and MRSS-CALM-002 and one Calorimeter Computer Rack, MRSS-CALM-001A will be installed for accountability measurements of 3013's. MRSS-CALM-001A will be vendor cable-connected to both calorimeters, powered by 120VAC/1000VA power and will have CAT 5e cable connections to MCA-CAB-002. Refer to Data Sheet J-JD-K-00061 and drawing J-J8-K-00036.

3.3.2.15 One barcode reader, MRSS-RDR-001, will be installed to read barcodes on 3013 containers. This instrument is powered by 120VAC/120VA and has CAT 5e cable connections to MCA-CAB-002. Refer to Data Sheet J-JD-K-00060 and drawing J-J8-K-00036.

3.3.2.16 Category 5e data wiring connections will be made from existing and selected CSSC NDA equipment to server rack MCA-CAB-002. This equipment will consist of one existing calorimeter rack in the NDA Room, one NMC rack in the NDA Room, one GIS rack in the Packaging Area, one scale and barcode reader also in the Packaging Area.

3.4 Electrical

3.4.1 Provide 120VAC/20amp circuits for Material Receipt and Storage area electrical loads from existing 120/208VAC panels in the CSSC area.

3.5 Plant Design

3.5.1 There are no specific requirements applicable to this category.

3.6 Civil/Structural/Architectural

3.6.1 The C/S/A scope of work required for installation of supports for the major components for material receipt Systems is as follows:

3.6.1.1 Gamma Isotopic System (GIS) [1]: Size- 5'x3'x 4' high; weight. = 200 lbs.

Calorimeters [2]: Size- 3'x3'x4' high; weight = 300 lbs.

Racks [4]: Size- 2'x3'x7' high; weight = 200 lbs.

APNMC [1]: Size- 3'x3'x4' high; weight = 400 lbs.

3.6.1.2 All the above equipment is supplied with a structural steel mounting base which will be anchored with ½ " diameter bolts to the concrete floor at 0 Level.

4.0 ASSUMPTIONS

4.1 General Assumptions

4.1.1 The Construction Agency will be the SRS Construction Group. DS will provide engineering documentation for the installation of this equipment and will rely on the use of SRS Guides and Standards.

4.1.2 SRS Construction Group will procure all bulk materials.

4.1.3 SRS Construction Group will procure all off-the-shelf components and equipment identified on engineering data sheets that do not require testing or quality documentation.

4.1.4 The Container Surveillance and Storage Capability (CSSC) Project is installed, functional and the equipment is available to support the Pu Disposition process (i.e., open 9975's, nondestructive assay, vault storage, rack storage).

4.1.5 Projects for KAC, CSSC and Pu Disposition remain intact and Memo of Understanding (MOU), M&O-NMM-2006-00122, Rev. 0, remains in effect.

4.1.6 CSSC provided power sources within CSSC Area have adequate spare capacity to accommodate Pu Disposition Project additions.

4.2 Specific Assumptions

Civil/Structural/Architectural

4.2.1.1 Core drills will be required for routing electrical conduit through walls or floors.

4.2.1.2 Assume all anchor bolts used for equipment and commodity supports will be A36 Drillco Maxi bolts. Alternatively, Hilti Kwik Bolts -TZ are acceptable for anchoring items.

4.2.1.3 Assume Functional Classification for drilling holes in concrete surface is SC.

4.2.1.4 Any components inside any equipment are the integral parts of that equipment as one unit.

4.2.1.5 The material for all the base plates and structural steel components shall be Galvanized Carbon Steel.

4.2.2 The Memorandum of Understanding (MOU) assumes that the DOE consolidation is complete, CSSC is operational and Pu Vit is at start-up, CSSC is projected to have greater than (1000) 3013s available for Pu Vit processing (900 from Consolidation and

greater than 100 from CSSC surveillances). To avoid just-in-time feedstock delays, Pu Vit will need to keep the vault stocked with 3013s, to include the required NDA for accountability measurements. Since CSSC is not a continuous shift operation, it is assumed that the Pu Vit operation will have adequate operational windows to accomplish the unpacking. NDA and storage activities. It is noted that the Pu Vit process has 1-2 days of lag storage in the Feed Prep and Oxidation glovebox modules (-40' level).

4.3 High Business Decision Range Estimate (HBDR)

4.3.1 Material Receipt Room 910A, located on the 0' elevation next to the CSSC operations, had been designated as the area that Pu Disposition would use for material receipt purposes. This room would require a significant amount of civil/structural/architectural, HVAC and safeguards/security (to convert to vault–type room) work in order for the area to be suitable for Pu Disposition Material Receipt. As a result, this location was designated as a HBDR option and Pu Disposition Material Receipt NDA equipment was subsequently located in the general CSSC Area. A Memorandum of Understanding, as described in 1.2, was developed to obtain agreement among the various projects to share the CSSC Area for Pu Disposition Material Receipt purposes. Refer to Drawing SK-DE-MRSS-0002.

At this time, there are studies in progress to locate an APNMC Shuffler System in this general area to be shared by CSSC, Pu Disposition and KIS. Placement of this large piece of equipment could possibly eliminate the availability of the 910A Room altogether.

If 910A is not available for Project use, the existing KIS Slug Vault can be utilized as an alternate location for Material Receipt functions. There are some operations concerns that would need to be addressed if the Slug Vault is used, however Rm. 910A bounds the high impact Project scope.

5.0 Technology Development Issues

5.0.1 There are no Technology Development Issues.

6.0 REFERENCES

6.1 Drawing List

6.1.1 PUD Project Drawings & Sketches

6.1.1.1 J-J8-K-00049, Rev. A, MC&A Network Block Diagram

6.1.1.2 J-J8-K-00036, Rev. B, Material Receipt and Storage Control Block Diagram

6.1.1.3 J-JD-K-00058, Rev. A, Material Receipt Weigh Scale Data Sheet

6.1.1.4 J-JD-K-00059, Rev. A, Material Receipt Active/Passive Neutron Multiplicity Monitor Data Sheet

6.1.1.5 J-JD-K-00060, Rev. A, Material Receipt Barcode Reader Data Sheet

6.1.1.6 J-JD-K-00061, Rev. A, Material Receipt Calorimeters Data Sheet

6.1.1.7 J-JD-K-00072, Rev. A, Material Receipt Gamma Isotopic System Data Sheet

6.1.1.8 SK-DE-MRSS-0002, Rev. D, Equipment Location Plan At Level 0'-0" Material Receipt

6.1.2 Existing Savannah River Site (SRS) Drawings

6.1.2.1 M-M2-K-00001, Rev. 0, 3013 Container Surveillance and Storage Capability, General Arrangement at El. 0'-0"

6.2 Design Input Documents

The following Facility and System Design Descriptions, Time and Motion Study, MC&A and Safeguards/Security Requirements are the baseline documents used to develop this SOW.

6.2.1 Facility Design Description

6.2.1.1 G-FDD-K-00001, Rev 0 "PUV Facility Design Description"

6.2.2 System Design Description

6.2.2.1 X-SYD-K-00004, Rev. B "Feed Preparation System (FPS) SDD

6.2.3 Time and Motion Study

6.2.3.1 G-ESR-K-00009, Rev. 0, Pu Vitrification Time and Motion Study

6.2.4 MC&A Requirements

6.2.4.1 WSRC-RP-2006-00678, Rev. 1, Preliminary Safeguards Strategy for Pu Disposition Project in KAC

6.2.5 Safeguards/Security Requirements

6.2.5.1 S-SRI-K-00005, Rev. 0, Safeguards and Security Requirements Identification Document

6.2.6 Control Automation Plans

6.2.6.1 J-PMP-K-00001, Rev. B, Control Automation Plan

6.2.6.2 J-PMP-K-00002, Rev. A, Plutonium Disposition Project, Material Control and Accountability and Dual Containment/Surveillance (C/S) System Plan

6.2.7 **Civil/Structural/Architectural**

6.2.7.1 For Electrical Conduit and Equipment Supports, Use Cookbook C-CI-G-0039

6.3 Applicable SRS & Industry Codes, Guides and Standards

6.3.1 Industry Codes and Standards

6.3.1.1 NFPA 70, 2005 – National Electrical Code

6.3.2 SRS Guides & Standards

6.3.2.1 WSRC-TM-95-1, SRSESM 15980, Rev. 6, Mechanical Installation of Safety Class and Safety Significant Instrumentation

6.3.2.2 WSRC-SCD-3, Rev. 19, “Nuclear Criticality Safety Manual”, Chapter 5, “Criticality Alarm Systems & Criticality Detection Systems”

6.3.2.3 DELETED

6.3.2.4 WSRC-TM-95-1, Standard No. 13096, Rev. 5, “Field Installation of Nuclear Incident Monitor (NIM) (U)”

6.3.2.5 WSRC Manual 5Q, Chapter 5, Rev. 11, “Radiological Health Support Systems”

6.3.2.6 WSRC-IM-2001-00025, Rev. 1, “The Savannah River Site Workplace Air Monitoring Technical Basis Manual (U)”

6.3.2.7 WSRC-TM-95-1, Standard No. 03010, Rev. 1, “Coring, Chipping, and Drilling in Concrete”

6.3.2.8 WSRC-IM-95-58, Guide No. 03252-G, Rev. 1, “Installation and Testing of Concrete Anchors”

6.3.2.9 WSRC-IM-95-58, Guide No. 15980-G, Rev. 3, “Installation and Calibration of Instruments”

6.3.2.10 WSRC-IM-95-58, Guide No. 16051-G, Rev. 2, “Installation of Electrical Raceway Systems and Cable Trays”

6.3.2.11 WSRC-IM-95-58, Guide No. 16052-G, Rev. 3, “Installation of Electrical Wires, Cables and Terminations”

6.3.2.12 WSRC-IM-95-58, Guide No. 16053-G, Rev. 2, “Installation of Electrical Equipment”

6.3.2.13 WSRC-IM-95-58, Guide 03251-G, Rev: 1, Concrete Anchors.

6.3.2.14 WSRC-IM-95-58, Guide 03252-G, Rev: 1, Installation and Testing of Concrete Anchors.

6.3.2.15 WSRC-IM-95-58, Guide 09900-G, Rev. 2, Architectural Field Painting.

6.3.2.16 WSRC-IM-95-58, Guide 09901-G, Rev. 2, Protective Coatings - Concrete and Masonry.

6.4 Related Scopes of Work (SOW)

6.4.1 J-SOW-K-00003, Rev. 0, Health and Safety Monitoring System

6.4.2 J-SOW-K-00002, Rev. 0, Scope of Work for ICS and MC&A Network.

6.4.3 C-SOW-K-00009, Rev. 0, Structural and Architectural Modifications for Process Building. This related SOW also provides the shielding, furnace module structural design and the room arrangements.

7.0 ATTACHMENTS

7.1 Attachment No. 1, C/S/A Bulk Material List (1ppg)

7.2 Attachment No. 2, Instrumentation and Controls Bulk Material List (2ppg)

7.1 Attachment No. 1

C/S/A Bulk Material List

Note: Table below includes the bulk material for installing/supporting major equipment.

Item No.	Description of Item	Size	Quantity	Remarks
1	Anchor Bolts	½" Dia.	36 each	

Reference: J-J8-K-00036

J-SOW-K-00005, Rev.0
Bulk Mat'l List
(Bulk Material Backup Data)

Item #	From Equipment	To Equipment	Cable Estimates (Exterior GB)			Shared Rcwy/Tray	Raceway Estimates				
			Length (A) (ft)	Qty (A)	Cable size/type	Length (C) (ft)	Length (D) (ft)	Qty (D)	Size/Desc. (D)	Red	Notes/Comments
1	MRSS-NCC-001A	MCA-CAB-002	120	1	Cat 5E (4 PR#24)		100	1	3/4" IMC	y	
2	MRSS-GRIS-001	MCA-CAB-002	120	1	Cat 5E (4 PR#24)	80	20	1	3/4" IMC	y	Included in NCC-001A Conduit
3	MRSS-CALM-001A	MCA-CAB-002	120	1	Cat 5E (4 PR#24)	80	20	1	3/4" IMC	y	Included in NCC-001A Conduit
4	MCA-CAB-002	MCA-CAB-002	3	1	Cat 5E (4 PR#24)	0	0	0	0	y	Internal Jumper
5	MRSS-RDR-001	MCA-CAB-002	100	1	Cat 5E (4 PR#24)		80	1	3/4" IMC	y	
6	MRSS-SCL-001	MCA-CAB-002	100	1	Cat 5E (4 PR#24)	60	75	1	3/4" IMC	y	Included in RDR-001 Conduit
7	MRSS-NCC-001	MRSS-NCC-001A	20	1	APNMC Vendor Cable		0	0	None	y	Connectors both ends
8	MRSS-GRIS-001	MRSS-GRIS-001A	20	1	GRIS Vendor Cable		0	0	None	y	Connectors both ends
9	MRSS-CALM-001	MRSS-CALM-001A	20	1	CALM Vendor Cable		0	0	None	y	Connectors both ends
10	MRSS-CALM-002	MRSS-CALM-001A	20	1	CALM Vendor Cable		0	0	None	y	Connectors both ends
11	CSSC CALM Rack	MCA-CAB-002	100	1	Cat 5E (4 PR#24)		100	1	3/4" IMC	y	
12	CSSC NCC Rack	MCA-CAB-002	120	1	Cat 5E (4 PR#24)	80	20	1	3/4" IMC	y	Included in CSSC CALM Conduit
13	CSSC GIS Comp Rack	MCA-CAB-002	100	1	Cat 5E (4 PR#24)	60	20	1	3/4" IMC	y	Included in RDR-001 conduit
14	CSSC Scale	MCA-CAB-002	100	1	Cat 5E (4 PR#24)	60	20	1	3/4" IMC	y	Included in RDR-001 Conduit
15	CSSC Barcode Reader	MCA-CAB-002	100	1	Cat 5E (4 PR#24)	60	10	1	3/4" IMC	y	Included in RDR-001Conduit
16	120V Dist Pnl	Misc Equip	95	6	3/c #12		75	5	3/4" IMC	n	
17											
18											
19											
20											

J-SOW-K-00005, Rev.0
Bulk Material List
(Bulk Material Summary)

Scope Set: J-SOW-K-00002

Date: 4/4/2007

Prepared By: D.H.Day

Reviewed By: R. Cates

Exterior Glovebox Cables

Sum of Qty XGB (ft)	
Ext. Cable Size/Type	Total
Cat 5E (4 PR#24)	1,083
APNMC Vendor Cable	20
GRIS Vendor Cable	20
CALM Vendor Cable	40
3/c #12	570
Grand Total	1,733

All Raceway Types

Sum of Qty Rcwy (ft)	
RCWY	Total
0	205
3/4" IMC	635
Grand Total	840

All Raceway Types Grouped by Red Designation

Sum of Qty Rcwy (ft)		
Red	RCWY	Total
n	0	0
	3/4" IMC	375
y	0	205
	3/4" IMC	260
Grand Total		840

PLUTONIUM DISPOSITION PROJECT (U)

Project M09A

SCOPE OF WORK

M-SOW-K-00011 Revision 0

for

Vitrification System (U)

Originated by: _____ Date: 3-9-07
Edward Tefft
Senior Mechanical/Process Engineer

Reviewed by: _____ Date: 3/9/2007
Nathan Shanmuganathan
Principal Process Engineer

Approved by: _____ Date: 3-9-07
Clayton Holloway
Mechanical Lead

Approved by: _____ Date: 3-13-07
Roderick King
Electrical/I&C Lead

Approved by: _____ Date: 3/12/2007
Ghada Elchoufi
C/S/A Lead

Approved by: _____ Date: 3-12-07
Drew Negus
Plant Design Lead

Approved by: _____ Date: 3-12-07
John Hammond
Construction Lead

Approved by: _____ Date: 3-13-07
Donald Fisher
Design Authority

Approved by: _____ Date: 3/15/07
B.C. Patel
Project Engineer

UNCLASSIFIED
DOES NOT CONTAIN UNCLASSIFIED
CONTROLLED NUCLEAR INFORMATION
DC/RO: 3-9-07

Revision Page

Revision	Revision Date	Affected Section	Description of Change
0	3/15/2007	N/A	Initial Issue

Table of Contents

Section Page

1.0 SCOPE 4
1.1 General Description 4
1.2 Background 4
2.0 ACRONYMS/ABBREVIATIONS 4
3.0 DESCRIPTION OF PHYSICAL WORK 5
3.1 Performance Category and Safety Classification (SC, SS, PS, GS) 5
3.2 Mechanical/Nuclear/Process 6
3.3 Instrumentation and Controls 10
3.4 Electrical 11
3.5 Plant Design 12
3.6 Civil/Structural/Architectural 12
4.0 ASSUMPTIONS 14
4.1 General Assumptions 14
4.2 Specific Assumptions 14
4.3 HBDER Scope 15
5.0 REFERENCES 16
5.1 Drawing List 16
5.2 Design Input Documents 18
5.3 Applicable SRS & Industry Codes, Guides and Standards 18
5.4 Related Scopes of Work (SOW) 18
5.5 Miscellaneous 19
6.0 ATTACHMENTS 19
6.1 Attachment 1, Bulk Material List, Piping/valves 19
6.2 Attachment 2, C/S/A Bulk Material List 19
6.3 Attachment 3, Electrical Bulk Material List 19
6.4 Vitrification Room 3D Room Layout Drawing 19

1.0 SCOPE

1.1 General Description

This Scope of Work (SOW) Covers the Vitrification System for the Plutonium Disposition Project. The Vitrification System receives a finely mixed powder of glass frit and plutonium oxide in transport hoppers from the Milling & Mixing System. In the Vitrification system the plutonium oxide/LaBS frit mixture is vitrified using a Cylindrical Induction Melter (CIM) and poured into Vit cans. The CIM consists of an induction heated Platinum/Rhodium (Pt/Rh) vessel. Ten CIM melter units will be required to obtain the throughput requirement. The output from Vitrification is Vit cans containing 10 kg of vitrified plutonium oxide/LaBS glass which are sent to the Bagless Transfer System.

1.2 Background

The Office of Environmental Management has approximately 13 metric tons (MT) of plutonium in approximately 21 MT of bulk materials without any defined disposition path. The Plutonium Disposition (PUD) Project is critical to meet the Department of Energy's strategic goal of providing a responsible resolution to the permanent disposal of the nation's excess high-level radioactive materials and waste; and to enable the cleanup of Environmental Management sites.

The Plutonium Disposition Facility (PDF) will be located at the K-Area Complex (KAC) to disposition up to approximately 13 Metric Tons (MT) of Environmental Management (EM) owned surplus plutonium. The facility will utilize a vitrification process to vitrify plutonium into a lanthanide borosilicate (LaBS) glass matrix. This glass will be packaged into bagless transfer cans and placed inside a Defense Waste Processing Facility (DWPF) type canister. The canister will be transported to DWPF and filled with High Level Waste (HLW) glass. The DWPF canisters will be stored in the Glass Waste Storage Buildings and later transported to the geologic repository at Yucca Mountain.

This Scope of Work (SOW) has been developed for the purpose of facilitating **construction** cost and schedule estimates for the Conceptual Design Report (CDR) on the PUD project. The input to this SOW was the approved technical baseline consisting of a Facility Design Description (FDD) and associated System Design Descriptions (SDD). Every effort has been made to assure alignment and consistency between this SOW and the appropriate sections of the technical baseline, in order to provide accurate estimates. This SOW is not a PUD technical baseline document. A more detailed description of the system can be found in the associated SDD listed in the reference section.

A HOLD is placed to identify information that is preliminary in nature, results from a design uncertainty, originates from insufficient documentation, needs verification, or identifies a discrepancy. A **TBD** is placed to identify places in the text where numeric values or descriptive information is not available at the time that the current revision of the SOW is released.

2.0 ACRONYMS/ABBREVIATIONS

AC	Alternating Current
CCTV	Closed Circuit Television
CIM	Cylindrical Induction Melter
C/S/A	Civil/Structural/Architectural

DS	Design Services
DWPF	Defense Waste Processing Facility
EMT	Electrical Metallic Conduit
GS	General Services
HBDER	High Business Design Estimate Range
HEPA	High-Efficiency Particulate Air (filter)
HVAC	Heating, Ventilation and Air Conditioning
ICS	Integrated Control System
IMC	Intermediate Metallic Conduit
I/O	Input/Output
KAC	K-Area Complex
LaBS	Lanthanide Borosilicate
MC&A	Material Control and Accountability
NFPA	National Fire Protection Association
PC	Performance Category
Pt/Rh	Platinum/Rhodium
PU	Plutonium
PUD	Plutonium Disposition
PuVit	Plutonium Vitrification
SC	Safety Class
SDD	System Design Description
SOW	Scope Of Work
SRID	Safeguards and Security Requirements Identification Document
SRS	Savannah River Site
SS	Safety Significant
TBD	To Be Determined
UNO	Unless Noted Otherwise
WSRC	Washington Savannah River Company

3.0 DESCRIPTION OF PHYSICAL WORK

3.1 Performance Category and Safety Classification (SC, SS, PS, GS)

3.1.1 Performance Category

3.1.1.1 The Vitrification System is Performance Category PC-2. **HOLD**. (Reference X-SYD-K-00006), (to be issued).

3.1.2 Functional Classification

3.1.2.1 The systems in this SOW shall be designed in accordance with the requirements of WSRC Manual WSRC-E7, Conduct of Engineering and Technical Support Procedure 2.25 Rev 14, “Functional Classification”, as follows (Reference X-SYD-K-00006, to be issued):

A. <u>Melter,</u>

Functional Classification – Safety Significant (SS)

B. Melter Heater Coils

Functional Classification – Safety Significant (SS)

C. Melter Heater Power Supplies (Equip. No. VIT-JX-001A to -010C)

Functional Classification – Production Support (PS)

D. Cooling Water System (including pumps, heat exchanger and tank).

Functional Classification – Safety Significant (SS)

E. Video Surveillance System

Functional Classification – Production Support (PS)

F. Can Lifting Device and Turntable

Functional Classification – Production Support (PS)

G. Gloveboxes

Functional Classification – Safety Significant (SS)

H. Hold-up Monitors

Functional Classification – Production Support (PS)

I. Bar Code Readers

Functional Classification – Production Support (PS)

3.2 Mechanical/Nuclear/Process

The Vitrification System has twelve gloveboxes: ten of which are Melter gloveboxes and the other two are a Can Feed glovebox and Cooling Area/Lag Storage glovebox. The melter gloveboxes are used for vitrification. The Can Feed glovebox is for empty Vit can introduction. The Cooling Area/Lag Storage glovebox is for Vit can cooling. An overview of the Vitrification process is provided in block flow diagram M-M8-K-00007. Material movement through the process is summarized in block flow diagram M-M8-K-00015.

3.2.1 Vitrification Glovebox Components

3.2.1.1 The following Vitrification process components will be contained within ten Melter gloveboxes. Reference sketch no. SK-DE-VIT-0003 for layout and location of components in the glovebox.The major components are:

A. 6” Platinum/Rhodium Melter Vessel, Insulated (10 ea.)

1. Details of the melter are in Data Sheet M-DS-K-00088. The melter is fed by a transport hopper from Milling & Mixing System. The melter melts the glass frit/plutonium oxide mixture to vitrify the plutonium. The melter includes a platinum/rhodium bubbler tube and thermowell. Platinum thermocouples are also welded to the melter vessel wall. A lid will be required on the melter, and will be opened and closed by remote operation.

B. Induction Heater Coils (30 ea.) and corresponding Heat Stations (30 ea.)

1. Details of the induction heater coils are in Data Sheet M-DS-K-00090. There are three heat zones on each melter, heated by three induction heater coils.

C. Off-gas duct (10 ea.)

1. The off-gas duct is assumed not to require specialty materials. The off-gas system is to be operated only after the dust has settled in the melter. See assumptions below. (Section 4.2)

D. Turntable (10 ea.)

1. Details of a typical turntable are in Data Sheet M-DS-K-00091 for estimating purposes. The turntable is located under the melter and moves Vit cans in and out from under the melter. The turntable will have four positions which would allow for an empty Vit can position, a position under the melter and two filled Vit can positions.

E. Vit Can Transfer Device (10 ea.)

1. Details of a transfer device are in Data Sheet M-DS-K-00091 for estimating purposes. The can transfer device is to lift and lower Vit cans from/to the transport cart.

F. Barcode Reader (20 ea.)

1. Details of the barcode readers are in Data Sheet J-JD-K-00068. The barcode readers are used to track the transport hoppers and Vit cans coming to and leaving the melter glovebox. There are two barcode readers for each glovebox.

G. Gamma Holdup Monitors (50 ea.)

1. Details of the gamma holdup monitors for measuring holdup for MC&A purposes are in Data Sheet J-JD-K-00069. Each glovebox has two gamma holdup monitors for a subtotal of 20 monitors. There are two gamma holdup monitors on each melter for a subtotal of 20 monitors. There is one gamma holdup monitor for each melter exhaust for a subtotal of 10 monitors.

H. For Piping and valves bulk material for inside the Melter gloveboxes see Attachment 1.

3.2.1.2 The following Vitrification process components will be contained within the Can Feed Glovebox. Reference sketch no. SK-DE-VIT-0007 for layout and location of components in the glovebox.The major components are:

A. Scale (1 ea.)

1. Details of the scale are in Data Sheet J-JD-K-00070. The scale is used to weigh empty Vit cans entering the Vitrification System.

B. Barcode Reader (1 ea.)

1. Details of the barcode readers are in Data Sheet J-JD-K-00068. The barcode reader tracks empty Vit cans entering the Vitrification System.

3.2.1.3 NOTE: This item is for HBDER Scope only. The following Vitrification process components will be contained within the Cooling Area/Lag Storage Glovebox.

Reference sketch no. SK-DE-VIT-0006 for layout and location of components in the glovebox. The major components are:

A. Transport Elevator (1 ea.)

1. A description of the transport elevator is in M-ESR-K-00012, Par. 4.6. The transport elevator will lift/lower filled vit cans to/from storage/cooling positions in the glovebox.

B. Barcode Reader (1 ea.)

1. Details of the barcode readers are in Data Sheet J-JD-K-00068. The barcode reader tracks filled vit cans going in and out of the glovebox.

3.2.2 Gloveboxes

See M-SPP-K-00059 for general glovebox requirements.

3.2.2.1 Melter Gloveboxes dimensions and layout are shown in drawing SK-DE-VIT-0003. The melter glovebox interfaces with a transport tunnel both above the glovebox and another tunnel below the glovebox. Access to the tunnels is isolated with slide-gate type doors that isolate the glovebox from the transport tunnels when access to and from the tunnels is not required. Gloveboxes are equipped with shielding to reduce the radiation dose to collocated workers and maintenance personnel.

Gloveboxes are ventilated with room air which is drawn through inlet HEPA filters and exhausted through additional HEPA filters to the Glovebox Exhaust System. See drawings M-M5-K-01947 and M-M6-K-02272 for glovebox exhaust flow diagram and piping and instrumentation diagram. Glovebox air flow also serves to cool hot Vit cans. (Ref. M-CLC-K-00695).

A removable maintenance panel is provided to replace the entire melter assembly in the event of a failure of the melter (e.g. melter vessel leakage). (Ref. M-ESR-K-00017). The maintenance concept is to have the melter assembly mounted on rails in the glovebox and to be easily removable/replaceable manually.

A. HEPA filter in stainless steel housing. (20 ea.)

B. Non-testable HEPA filter mounted to skin of glovebox. (10 ea.).

C. 8” automatic damper, pneumatically operated, stainless (10 ea.)

D. 4” isolation dampers, stainless (40 ea.)

E. 4” balancing damper, stainless (10 ea.)

F. ¼” three-way ball valves, stainless (70 ea.)

G. 1” ball valve, stainless (10 ea.)

3.2.2.2 The Can Feed Glovebox dimensions and layout are shown in drawing SK-DE-VIT-0007. The Can Feed glovebox interfaces with the lower transport tunnel. Access to the tunnel is isolated with a slide-gate type door that isolates the glovebox from the transport tunnel when access to the tunnel is not required.

The glovebox is ventilated with room air which is drawn through inlet HEPA filters and exhausted through additional HEPA filters to the Glovebox Exhaust System. See drawings M-M5-K-01976 and M-M6-K-02317 for glovebox exhaust flow diagram and piping and instrumentation diagram.

The glovebox is equipped with an airhood to allow the introduction of empty Vit cans into the process.

A. HEPA filter in stainless steel housing. (2 ea.)

B. Non-testable HEPA filter mounted to skin of glovebox. (1 ea.).

C. 8” automatic damper, pneumatically operated (1 ea.)

D. 4” isolation dampers (5 ea.)

E. 4” balancing damper (2 ea.)

F. ¼” three-way ball valves, stainless (7 ea.)

3.2.2.3 NOTE: This item is for HBDER Scope only. The Cooling Area/Lag Storage Glovebox dimensions and layout are shown in drawing SK-DE-VIT-0006. The Cooling Area/Lag Storage Glovebox interfaces with the lower transport tunnel coming from the melters and with the transport tunnel that connects to the Bagless Transfer System. Access to the tunnels is isolated with slide-gate type doors that isolate the glovebox from the transport tunnels when access to and from the tunnels is not required. Glovebox is equipped with shielding.

The glovebox is ventilated with room air which is drawn through inlet HEPA filters and exhausted through additional HEPA filters to the Glovebox Exhaust System. See drawings M-M5-K-01977 and M-M6-K-02315 for glovebox exhaust flow diagram and piping and instrumentation diagram.

A. HEPA filter in stainless steel housing. (2 ea.)

B. Non-testable HEPA filter mounted to skin of glovebox. (1 ea.).

C. 8” automatic damper, pneumatically operated (1 ea.)

D. 4” isolation dampers (4 ea.)

E. 4” balancing damper (1 ea.)

F. ¼” three-way ball valves, stainless (7 ea.)

3.2.3 Scope at -20 Level and Outside the Gloveboxes

3.2.3.1 Vitrification Cooling System

The Vitrification Cooling System is distilled water service. Distilled water is required such that the water is electrically non-conductive as it is used to cool the

induction heater power supplies, heat stations, and coils. Consequently, austenitic stainless steel is required for piping and components. See drawings M-M5-K-01949 and M-M6-K-02294 through M-M6-K-02309 for flow and piping & instrumentation diagrams.

A. Heat Exchangers (2 ea.).

1. Details of the shell and tube heat exchanger are per Data Sheet M-DS-K-00094.

B. Centrifugal Pumps (3 ea.)

1. Details of the canned motor pumps are per Data Sheet M-DS-K-00093.

C. Expansion tank. (1 ea.)

1. Details of the expansion tank are per Data Sheet M-DS-K-00092.

D. Piping and Valves Bulk Material

1. Bulk piping outside the gloveboxes is documented in sketches SK-DE-ISO-0001 through -0003. See Attachment 1 for piping bulks inside the gloveboxes and for valve bulks. All cooling water piping is insulated with elastomeric foam.

3.2.4 Piping

3.2.4.1 Piping material is designated by a “P-spec” designation from SRS Document WSRC-IM-95-58, Guide No. 15060. The piping material will be welded or utilize flange fittings.

3.2.4.2 There will be a total of 40 ea. glovebox tubing penetrations.

3.3 Instrumentation and Controls

3.3.1 Each of the ten melters will be controlled by the Melter Induction Coil Heater Controls (M-DS-K-00090) housed in the10 Induction Heater Control Cabinets at the -20' I/O Room. A redundant serial link will be provided by the vendor for communication to the ICS (J-SOW-K-00002; to be issued). The ICS will monitor and provide supervisory control to the melter. Each of the three induction heating coils will include the controller, On/Off switches, status, variable output, amps, volts, and power, and interlocks. Controls equipment requirements are detailed in the control block diagram J-J8-K-00024 and in Logic Description J-J2-K-01553.

3.3.2 In addition, each of the ten melters will be controlled by the ICS containing the following instruments UNO, (for automatic valves not listed below, see Mechanical section above):

3.3.2.1 Melter (see M-DS-K-00088 for Melter which includes cover positioner, see M-M6-K-02300 to -02309) additional instrumentation required:

A. Electric actuator (10 ea.)
B. Position Switches (20 ea.)
C. Zoned Thermocouples (20 ea. + 10 ea. in melters)
D. Melter Leak Detection Switch (10 ea.), (RLE Technologies, Model Seahawk LDZ1 or equal)

3.3.2.2 Turntable with can in position switch and Transfer Device (see M-DS-K-00091) additional instrumentation:

A. Position Switch (10 ea.)

3.3.2.3 Cooling water to induction heaters instrumentation (see M-DS-K-00092, 93, and 94; see also M-M6-K-02996 and M-M6-K-02997)

A. Flow Meters (2 ea.), (Dwyer HFT-2440, transmitting rotameter)
B. Pump Motor Status (3 ea.)
C. Conductivity Probe and Switch (1 ea.), (Foxboro 875CR).
D. Temperature Indicating Controller (2 ea.)
E. Differential Pressure Transducer (2 ea.)
F. Thermocouple(4 ea.)
G. Local Level Gage (1 ea.)
H. Local Pressure Gage (8 ea.)
I. Pressure Transducer (2 ea.)

3.3.2.4 Glovebox exhaust instrumentation (see M-M6-K-02272)

A. Differential Pressure Transducer (24 ea.) (Dwyer 3000SGT, or equal)
B. Flow Meter (12 ea.), (Air Monitor, Model FR- pitot pressure, or equal)

3.3.2.5 Dry Air to Bubbler and Drain Tube - (see M-DS-K-00088 and M-M6-K-02271) (Ref. Scope for Dry Air equipment M-SOW-K-00021, to be issued)

3.3.2.6 Melter Offgas instrumentation (see M-M6-K-02272)

A. 1” Solenoid Valves (10 ea.)

3.3.2.7 Glovebox Air Supply instrumentation-(see M-M6-K-02272)

A. Differential Pressure Transducer (12 ea.), (Dwyer 3000SGT, or equal).

3.3.2.8 Lag Storage Transport Elevator additional instrumentation (see Material Transport Strategy M-ESR-K-00012)

A. Actuators (2 ea.)
B. Position Switches (2 ea.)

3.3.2.9 Vitrification Glovebox Instrumentation Rack (2 ea.), Equipment No’s VIT-INST-100 and VIT-INST-200 (-40' I/O Room).

3.3.2.10 MC&A Equipment

A. See Mechanical/Nuclear/Process section for description of major equipment in each glovebox for details of barcode readers, gamma hold-up monitors and a scale used for MC&A.

3.4 Electrical

3.4.1 The Vitrification System will contain the following major electrical components and services. The major electrical components will be provided as Engineered Equipment. This Scope of Work includes all raceway, power, control cables/terminations between process related equipment and associated controls.

Provide onsite setup and assembly of the referenced Engineered Equipment. Refer to the attached Bulk Takeoff for cable and conduit descriptions and quantities. Approximately 172 glovebox penetrations will be required.

3.4.1.1 Electrical power distribution will be as shown on single line drawings E-E2-K-02229 and E-E2-K-02230. See Attachment 3 for Electrical Bulk Material List giving specific cable, wiring and conduits count.

3.4.1.2 Note: Separate individual wireways (6”X6”X4”) will be installed to each melter as listed in Attachment 3. At least a 12” separation will be maintained between installed wireways.

3.4.1.3 The Vitrification Viewing System, has the following electrical equipment, refer to Block Diagram No. E-EB-K-00705 and Data Sheet No. E-DS-K-00021.

A. 30 ea.– Vitrification Melter Glovebox Cameras VIT-PCTV-001A, B, C thru VIT-PCTV-010A, B, C

B. 5 ea.– Pan/Tilt Room Cameras VIT-CCTV-001 thru VIT-CCTV-005

C. 1 ea.– Video Equipment Rack with Controller and Selector VIT-VER-001

D. 1 ea.– Video Monitor VIT-MON-001

E. 1 ea.– Pan/Tilt Controller VIT-PTC-001

3.4.1.4 Work Scope includes installation of new grounding pigtails (approx. 10 ft. long with bolted connections) between new permanent electrical equipment and/or skids to the existing ground grid system. Small movable equipment shall be grounded in accordance with code and or industry practices.

3.4.1.5 Provide and install 23 ea. junction/pull boxes. Assume 12”X12”X6” junction boxes.

3.5 Plant Design

3.5.1 Piping quantities have been estimated in Attachment 1.

3.6 Civil/Structural/Architectural

3.6.1 Refer to C-SOW-K-00009 for other Civil/Structural/architectural scope (to be issued).

3.6.2 See Attachment 2 for C/S/A bulk material list. The bulk material list is based upon the installation of the equipment as detailed below:

3.6.2.1 <u>Melter Gloveboxes.</u> (10 ea.) Reference sketch no. SK-DE-VIT-0003.

There are 10 Gloveboxes with WEP and lead shielding. The size of the Glovebox is approximately 7’ X 4’ X 9’ high and each box weighs approximately 5000 lbs. Each Glovebox is supported on 4 legs with footprint = 6” X 6” square. Each foot will be welded to steel base plate 12” X 12” X ¾” thick, with ¾ “diameter bolts anchored to the -40 Level concrete floor.

3.6.2.2 HEPA Filter Housing (12 ea.)

There are 12 HEPA units to be supported. The size of the HEPA Filter Housing is approximately 3' X 3' X 3' high and each weighs approximately 300 lbs. Each housing will be strapped by steel L bents which are bolted by ¾" diameter bolts at all the attachment points to the ceiling, located below -20 Level concrete slab.

3.6.2.3 Can Feed Glovebox. (1 ea.) Reference sketch no. SK-DE-VIT-0007.

The size of the Can Feed Glovebox is approximately 12' X 3' X 11' high and weighs approximately 2000 lbs. It is supported on 4 legs with footprint = 6" X 6" square. Each foot will be welded to a steel base plate 12" X 12" X ¾ "thick with 1 " diameter bolts anchored to the -40 Level concrete floor. This glovebox has no shielding.

3.6.2.4 Cooling Area/Lag Storage Glovebox. (1 ea.) Reference sketch no. SK-DE-VIT-0006.

The size of the Cooling Area/Lag Storage Glovebox is approximately 9'-9" X 4-3"' X 12' high and weighs approximately 7000 lbs. It is supported on 4 legs with footprint = 6" X 6" square. Each foot will be welded to a steel base plate 12" X 12" X ¾ "thick with 1 " diameter bolts anchored to the -40 Level concrete floor. It will also be horizontally strapped around by steel L bents bolted by ¾" diameter bolts and anchored to the concrete wall near to it on the -40 Level floor. The Cooling Area/Lag Storage Glovebox has WEP and lead shielding.

3.6.2.5 Melter Power Supply Racks. (10 ea.) Reference sketch no. SK-DE-VIT-0008

There are 10 Racks to be supported. The size of each Rack is approximately 2'-6" X 2'-1½" X 5' high and each Rack weighs approximately 700 lbs. It will be horizontally strapped around by steel L bents attached by bolts at the bottom of Rack. The L bents will be bolted by ¾" diameter bolts and anchored on the -20 Level concrete floor.

3.6.2.6 Pumps. (3 ea.) Reference data sheet no. M-DS-K-00093

The pump is supported on the frame with bolt pattern of 4 bolts spaced 3.125" by 8.5". It weighs about 100 lbs. The frame will be anchored by ½" diameter bolts to the concrete floor.

3.6.2.7 Heat Exchangers. (2 ea.) Reference data sheet no. M-DS-K-00094

The Heat Exchanger is supported on the frame with bolt pattern of 4 bolts spaced 34.5" by 3.5". It weighs about 100 lbs. The frame will be anchored by ½" diameter bolts to the concrete floor.

3.6.2.8 Expansion Tank (1 ea.) Reference data sheet no. M-DS-K-00092

The size of tank is about 18" Dia. x 4' high and weighs 650 lbs. It is assumed to be supplied with 4 legs L 3 X 3 X 3/8 and the base plate 5"x 5" x ½" with 1 – 11 /16" diameter hole. Each base plate will be anchored by ¾" diameter bolts to the concrete floor.

3.6.2.9 Air inlet HEPA filter housing. (12 ea.) Reference sketch no. SK-DE-VIT-0003.

Under each Glovebox the inlet HEPA filter housing needs to be anchored (-40 level to the floor). These housings are conservatively 30"X30"X30" and weighing 100lbs. will be anchored on its frame by ½" Dia. anchor bolts on the -40 Level concrete floor.

3.6.2.10 Instrument cabinets. (2 ea.) Reference sketch no. SK-DE-VIT-0008

Two instrument cabinets will be part of the Vitrification scope on the -40 level in line with other instrument cabinets weighing approximately 100lbs. each. These cabinets will be anchored to the floor with ¾" bolts.

4.0 ASSUMPTIONS

4.1 General Assumptions

4.1.1 The Construction Agency will be the SRS Construction Group. Design Services will provide engineering documentation for the installation of this equipment and will rely on the use of SRS Guides and Standards.

4.1.2 SRS Construction Group will procure all bulk materials.

4.1.3 SRS Construction Group will procure all off-the-shelf components and equipment identified on engineering data sheets that do not require testing or quality documentation.

4.2 Specific Assumptions

4.2.1 Mechanical

4.2.1.1 The 6 inch cylindrical Induction Melter has not been tested. Development and testing of the melter is not within the scope of this document.

4.2.1.2 The induction heat stations to be collocated with the melter need to be shown to be compatible with the radiation environment inside the glovebox. Qualification of the induction heat stations and cable for radiation environment is not within the scope of this document.

4.2.1.3 Per Interoffice Memorandum M&O-PUD-2006-00033, the offgas system was deleted from the scope of the Conceptual Design. It is assumed no wet/special offgas system will be required.

4.2.1.4 All pressure vessels with an ID 6" or greater will be per ASME B&PVC Section VIII, Division 1 code stamped or an approved waiver

4.2.1.5 All piping will be per ASME B31.3.

4.2.2 Instrumentation and Controls

4.2.2.1 No specific assumptions have been made in this group.

4.2.3 Electrical

4.2.3.1 Assume that all permanently installed cabling will be routed in protected conduit/tray.

4.2.3.2 Cables installed within Gloveboxes will be routed within designated tray located within GB and/or supported from structural members within GB utilizing cable tie wraps.

4.2.3.3 Existing grounding grid is intact and adequate for grounding of new equipment.

4.2.3.4 Melter induction heater system will include all hardware and cabling necessary for on site assembly. Terminations will utilize vendor assembled connectors or detailed wiring/connection drawings will be provided.

4.2.4 Plant Design

4.2.4.1 No specific assumptions have been made in this group.

4.2.5 Civil/Structural/Architectural

4.2.5.1 Core drills will be required for routing electrical conduit through walls or floors. (Covered in C-SOW-K-00009, to be issued).

4.2.5.2 Assume all anchor bolts used for equipment and commodity supports will be A36 Drillco Maxi bolts.

4.2.5.3 Assume Functional Classification for drilling holes in concrete surface is SC.

4.2.5.4 For electrical conduits and equipment supports, use cookbook No. C-CI-G-0039. For routing and supports for NPS 2” and smaller piping, use cookbook No. C-CH-G-00004.

4.3 HBDER Scope

4.3.1 The Cooling Area/Lag Storage Glovebox is HBDER scope. It is likely that the filled Vit can cooling and lag storage can be accomplished by storing filled Vit cans on the turntables below the melters in the Melter Gloveboxes.

4.3.2 Radiation hardened video cameras may be required in the gloveboxes if non-rad hardened cameras cannot withstand the radiation environment. Total number of cameras is 30.

5.0 REFERENCES

5.1 Drawing List

5.1.1 PUD Project Drawings & Sketches

5.1.1.1 M-M8-K-00001, Rev. A,Plutonium Disposition Facility, Level 1
5.1.1.2 M-SPP-K-00059, Rev.B, Plutonium Disposition Gloveboxes
5.1.1.3 P-PG-K-02142, Rev. B, Plutonium Disposition Project General Arrangement Plan at Level -20
5.1.1.4 P-PG-K-02143, Rev. B, Plutonium Disposition Project General Arrangement Plan at Level -40
5.1.1.5 E-DS-K-00021, Rev. A, Milling & Mixing and Vitrification area Viewing Camera System.
5.1.1.6 E-EB-K-00705, Rev. C, Vitrification Viewing System Block Diagram
5.1.1.7 E-E2-K-02229, Rev. D, Milling/Mixing and Vitrification Motor Control Center - ELNH-MCC-24M Single Line Diagram
5.1.1.8 E-E2-K-02230, Rev. D, Milling/Mixing and Vitrification Motor Control Center - ELNH-MCC-31M Single Line Diagram
5.1.1.9 J-J2-K-01553, Rev. A, Vitrification Logic Description
5.1.1.10 J-J8-K-00017, Rev. B, Vitrification MC&A Control Block Diagram
5.1.1.11 J-J8-K-00024, Rev. B, Vitrification System Control Block Diagram
5.1.1.12 J-JD-K-00068, Rev. A, Vitrification Barcode Readers
5.1.1.13 J-JD-K-00069, Rev. A, Vitrification Holdup Monitors
5.1.1.14 J-JD-K-00070, Rev. A, Vitrification Vit Can Weigh Scale.
5.1.1.15 M-CLC-K-00695, Rev. A, Vitrification Glovebox Cooling.
5.1.1.16 M-CLC-K-00697, Rev. A, Vitrification - Pump and Heat Exchanger Sizing Calculation
5.1.1.17 M-ESR-K-00017, Rev. 0, Maintenance & Replacement Strategy
5.1.1.18 M-DS-K-00088, Rev. C, Plutonium Disposition Melter Components
5.1.1.19 M-DS-K-00090, Rev. B, Pu Disposition Vitrification Heaters
5.1.1.20 M-DS-K-00091, Rev. B, Pu Disposition Vitrification Turntable/Actuator
5.1.1.21 M-DS-K-00092, Rev. A, Pu Disposition Vitrification Make-Up Water and Pressurization Tank
5.1.1.22 M-DS-K-00093, Rev. B, Pu Disposition Vitrification Cooling Water Pump
5.1.1.23 M-DS-K-00094, Rev. B, Pu Disposition Vitrification Heat Exchanger
5.1.1.24 M-ESR-K-00012, Rev. 0, Facility Material Transport System Strategy Report
5.1.1.25 M-M5-K-01947, Rev. B, Vitrification System Glovebox Air Flow Diagram
5.1.1.26 M-M5-K-01948, Rev. B, Vitrification System Dry Air Airflow Diagram
5.1.1.27 M-M5-K-01949, Rev. A, Vitrification System Cooling Water Flow Diagram
5.1.1.28 M-M5-K-01976, Rev. A, Vitrification Can Feed Glovebox Airflow Diagram
5.1.1.29 M-M5-K-01977, Rev. A, Vitrification Cooling Station/Lag Storage Glovebox Airflow Diagram
5.1.1.30 M-M6-K-02271, Rev. B, Plutonium Disposition Project - Vitrification System Dry Air Piping and Instrumentation Diagram
5.1.1.31 M-M6-K-02272, Rev. B, Glovebox Piping and Instrumentation Diagram
5.1.1.32 M-M6-K-02294, Rev. A, Plutonium Disposition Project Vitrification Cooling Water Distribution Melters 1 thru 4 Piping & Instrumentation Diagram
5.1.1.33 M-M6-K-02295, Rev. A, Plutonium Disposition Project Vitrification Cooling Water Distribution Melters 5 thru 10 Piping & Instrumentation Diagram
5.1.1.34 M-M6-K-02296, Rev. A, Plutonium Disposition Project Vitrification Cooling Water Pump Station Piping & Instrumentation Diagram
5.1.1.35 M-M6-K-02297, Rev. A, Plutonium Disposition Project Vitrification Cooling Water Heat Exchanger Piping & Instrumentation Diagram
5.1.1.36 M-M6-K-02298, Rev. A, Plutonium Disposition Project Vitrification Cooling Water Distribution Melters 1 thru 4 Piping & Instrumentation Diagram

5.1.1.37 M-M6-K-02299, Rev. A, Plutonium Disposition Project Vitrification Cooling Water Distribution Melters 5 thru 10 Piping & Instrumentation Diagram
5.1.1.38 M-M6-K-02300, Rev. A, Plutonium Disposition Project Vitrification Cooling Water Melter No. 1 Piping & Instrumentation Diagram
5.1.1.39 M-M6-K-02301, A, Plutonium Disposition Project Vitrification Cooling Water Melter No. 2 Piping & Instrumentation Diagram
5.1.1.40 M-M6-K-02302, Rev. A, Plutonium Disposition Project Vitrification Cooling Water Melter No. 3 Piping & Instrumentation Diagram
5.1.1.41 M-M6-K-02303, Rev. A, Plutonium Disposition Project Vitrification Cooling Water Melter No. 4 Piping & Instrumentation Diagram
5.1.1.42 M-M6-K-02304, Rev. A, Plutonium Disposition Project Vitrification Cooling Water Melter No. 5 Piping & Instrumentation Diagram
5.1.1.43 M-M6-K-02305, Rev. A, Plutonium Disposition Project Vitrification Cooling Water Melter No. 6 Piping & Instrumentation Diagram
5.1.1.44 M-M6-K-02306, Rev. A, Plutonium Disposition Project Vitrification Cooling Water Melter No. 7 Piping & Instrumentation Diagram
5.1.1.45 M-M6-K-02307, Rev. A, Plutonium Disposition Project Vitrification Cooling Water Melter No. 8 Piping & Instrumentation Diagram
5.1.1.46 M-M6-K-02308, Rev. A, Plutonium Disposition Project Vitrification Cooling Water Melter No. 9 Piping & Instrumentation Diagram
5.1.1.47 M-M6-K-02309, Rev.A, Plutonium Disposition Project Vitrification Cooling Water Melter No. 10 Piping & Instrumentation Diagram
5.1.1.48 M-M6-K-02315, Rev. A, Vitrification Cooling Station/Lag Storage Glovebox Piping & Instrumentation diagram
5.1.1.49 M-M6-K-02317, Rev. A, Vitrification Can Feed Glovebox Piping & Instrumentation Diagram
5.1.1.50 M-M8-K-00007, Rev. A, Vitrification System Block Flow Diagram
5.1.1.51 M-M8-K-00015, Rev. A, Vitrification System Material Handling Block Flow Diagram
5.1.1.52 SK-DE-ISO-0001, Rev. A, System Piping Isometric, Vitrification System Cooling Water Supply for Power Supplies and Melters.
5.1.1.53 SK-DE-ISO-0002, Rev. A, System Piping Isometric, Vitrification System Cooling Water Return from Power Supplies and Melters.
5.1.1.54 SK-DE-ISO-0003, Rev. A, System Piping Isometric, Vitrification System Cooling Water Supply
5.1.1.55 SK-DE-VIT-0003, Rev. D, Plutonium Disposition Project Vitrification Melter Glovebox and Shielding Layout
5.1.1.56 SK-DE-VIT-0005, Rev. A, Melter Room Arrangement -40
5.1.1.57 SK-DE-VIT-0006, Rev. B, Cooling Area/Lag Storage Glovebox Layout
5.1.1.58 SK-DE-VIT-0007, Rev. B, Vitrification Can Feed Glovebox Layout
5.1.1.59 SK-DE-VIT-0008, Rev. A, Vitrification Mezzanine Arrangement -20
5.1.1.60 SK-DE-VIT-0014, Rev. A, Vitrification Partial floor Plan @ Elev -40’-0”
5.1.1.61 SK-DE-VIT-0015, Rev. A, Vitrification Building Sections

5.1.2 Existing Savannah River Site (SRS) Drawings

5.1.2.1 W134828, Rev. 44, Process Area Bldg. #[KAC] Power Transformer Rm. #2 Electrical & Concrete
5.1.2.2 W134850, Rev. 19, Process Area Bldg #[KAC] Power Transformer Rm.#3 Electrical
5.1.2.3 W825664, Rev. 54, Process Area – Bldg. {KAC] Reactor Elect. Distr. System T.R.2, 480V
5.1.2.4 W825665, Rev. 55, Reactor Elect. Distr. System T.R.3, 480V. SWGR-Single Line Diagram Electrical

5.2 Design Input Documents

The following Facility Design Description and System Design Descriptions are the baseline documents used to develop this SOW.

5.2.1 Facility Design Description

5.2.1.1 G-FDD-K-00001, Rev B "PUV Facility Design Description", (to be issued)

5.2.2 System Design Description

5.2.2.1 X-SYD-K-00006, Rev. B "Vitrification System (VIT) SDD", (to be issued)

5.2.3 Safeguards and Security Requirements Identification document

5.2.3.1 S-SRI-K-00005, Rev. 0, "KAC Safeguards and Security Requirements Identification Document for Plutonium Disposition".

5.3 Applicable SRS & Industry Codes, Guides and Standards

5.3.1 Industry Codes and Standards

5.3.1.1 ASME B31.3, 2006 - Chemical Plant and Petroleum Refinery Piping
5.3.1.2 ASME Boiler and Pressure Vessel Code, Sect. VIII, Div. 1, 2006
5.3.1.3 NFPA 70, 2006 – National Electrical Code

See Functional Design Description and System Design Descriptions for more codes and standards. (Ref. G-FDD-K-00001 and X-SYD-K-00006, both to be issued).

5.3.2 SRS Guides & Standards

5.3.2.1 WSRC-TM-95-1, Standard no. 03010, Rev: 1, Coring, Chipping, and Drilling in Concrete.
5.3.2.2 WSRC-TM-95-1, Standard no. 05057, Rev: 1, Control of Welding.
5.3.2.3 WSRC-TM-95-1, Standard no. 15980, Rev. 0, Mechanical Installation of Safety Class and Safety Significant Instrumentation.
5.3.2.4 WSRC-IM-95-58, Guide 03252-G, Rev: 1, Installation and Testing of Concrete Anchors.
5.3.2.5 WSRC-IM-95-58, Guide 15060-G, Rev. 5, Application of ASME B31.3.
5.3.2.6 WSRC-IM-95-58, Guide no. 15980-G, Rev.3, "Installation and Calibration of Instruments"
5.3.2.7 WSRC-IM-95-58, Guide no. 16051-G, Rev.2, "Installation of Electrical Raceway Systems and Cable Trays"
5.3.2.8 WSRC-IM-95-58, Guide no. 16052-G, Rev.3, "Installation of Electrical Wires, Cables and Terminations"
5.3.2.9 WSRC-IM-95-58, Guide no. 16053-G, Rev.2, "Installation of Electrical Equipment"
5.3.2.10 WSRC-IM-95-58, Guide no. 16056-G, Rev.2, "Installation of Grounding Systems"

5.4 Related Scopes of Work (SOW)

5.4.1 C-SOW-K-00009, Rev. 0, Scope of Work for Structural and Architectral Modifications for Process Building, (to be issued).

5.4.2 E-SOW-K-00017, Rev. 0, Electrical General Scope of Work, (to be issued).

5.4.3 J-SOW-K-00002, Rev. 0, Scope of work for ICS & MC&A Network, (to be issued).

5.4.4 M-SOW-K-00020, Rev. 0, Scope of Work for HVAC System, (to be issued).

5.4.5 M-SOW-K-00021, Rev. 0, Scope of Work for Dry Air System, (to be issued).

5.4.6 M-SOW-K-00022, Rev. 0, Scope of Work for Balance of Plant Water Systems, (to be issued).

5.5 Miscellaneous

5.5.1 C-CI-G-0039, Rev: 0, Electrical Conduit and Equipment Supports.
5.5.2 C-CH-G-00004, Rev. 0, Routing & Supports for NPS 2 and Smaller Piping.
5.5.3 M&O-PUD-2006-00033, Deletion of Offgas activities from the current schedule of Pu Disposition Project M09A.

6.0 ATTACHMENTS

6.1 Attachment 1, Bulk Material List, Piping/valves
6.2 Attachment 2, C/S/A Bulk Material List
6.3 Attachment 3, Electrical Bulk Material List
6.4 Vitrification Room 3D Room Layout Drawing

6.1 ATTACHMENT 1
BULK MATERIAL LIST PIPING/VALVES

Melter gloveboxes

Item No.	Description of Item	Spec	Size	Quantity	Remarks
1	Dry Air Piping	PS204A	¼”	150 ft.	Ref. Dwg. M-M6-K-02271
2	Distilled Water Service for Cooling	PS204A	3/8”	150 ft.	Ref. Dwg’s M-M6-K-02300 to -02309 Insulated with elastomeric foam.
3	Offgas ducting	PS210B	1”	30 ft.	Ref. Dwg. M-M6-K-02272 **HOLD** (see Assumptions)
4	Stainless braided hoses	Swagelok	3/8” X 3 ft.	40 ea.	Connections to melter
5	PEEK Hose		3/8”	50 ft	Non-conductive radiation resist. hose
6	Manual ball valves, SS	Swagelok H83 series	¼”	40 ea.	Isolation valves
7	Quick disconnect	Swagelok QC series	3/8”	40 ea.	
8					

Cooling water piping system bulks (distilled water service)

Item No.	Description of Item	Spec	Size	Quantity	Remarks
1	Piping	PS200A			See sketches SK-DE-ISO-0001 to -0003 for lengths, sizes and fittings. Has elastomeric foam insulation.
2	Gate valve	300 series stainless	1-1/2”	15 ea.	
3	Bypass pressure reducing valve	300 series stainless	1-1/2”	2 ea..	Robson Industries, West Chester, PA, Model BPR-1 ½-SS
4	Check valve	300 series stainless	1-1/2”	3 ea..	
5	Globe valve	300 series stainless	1-1/2”	2 ea..	
6	Manual ball valves, SS	300 series stainless	½”	40 ea.	Swagelok H83 series
7	Three way control valve	300 series stainless	1-1/2”	2 ea.	Fisher/Baumann “Little Scotty”, model 24003
8	Automatic globe valve	300 series stainless	1-1/2”	20 ea.	

6.2 ATTACHMENT 2
C/S/A BULK MATERIAL LIST

Note: Table below includes the bulk material for installing/supporting major equipment. Bulk material for piping and conduit support is not included in the table below.

Item No.	Description of Item	Size	Quantity	Remarks
1	Base Plates	12” X 12” X ¾” Thick	48 ea.	Galvanized Carbon steel
2	Anchor Bolts	½” Dia.	68 ea.	
3	Anchor Bolts	¾” Dia.	260 ea.	
4	Anchor Bolts	1” Dia.	32 ea.	
5	Structural Steel L	L 3 X 3 X ½	340 Feet	Cut to Suit, Galvanized carbon steel.

6.3 ATTACHMENT 3, ELECTRICAL BULK MATERIAL LIST

Scope Set: Vitrification System

Date: 2/28/2007

Prepared By: G.S. Rao

Reviewed By: Rod King

Exterior Glovebox Cables

Sum of Qty XGB (ft)	
Ext. Cable Size/Type	Total
3/C#4 w/1-#10gnd	7,650
3/C #12 w/1-#12gnd	660
2/C #12	5,610
1 PR #16 SH.	119,960
Vendor Cable - 5/C #22	4,750
Vendor Cable Sensor/Control	4,800
Vendor Cable RF cable	4,800
Vendor Cable RG6 + 6/c # 16 Control Cable	6,320
Vendor Cable Data Cable	320
2/0 Gnd	900
50 - PR # 16 SH	1,200
16 - PR # 16 SH	120
Grand Total	157,090

Interior Glovebox Cables

Sum of Qty NGB (ft)	
GB Cable Size/Type	Total
2/C #12	315
1 PR #16 SH.	9460
Vendor Cable Sensor/Control	600
Vendor Cable RF cable	600
Vendor Cable RG6 + 6/c # 16 Control Cable	310
Grand Total	11285

All Raceway Types

Sum of Qty Rcwy (ft)	
RCWY	Total
WIRE WAY 6"X6"X4"	1150
1" IMC	600
3/4" IMC	8810
2" IMC	5835
1-1/2" IMC	3750
3" IMC	3290
Grand Total	23435

All Raceway Types Grouped by Red Designation

Sum of Qty Rcwy (ft)		
Red	RCWY	Total
N	WIRE WAY 6"X6"X4"	1,150
	1" IMC	600
	3/4" IMC	1,665
	2" IMC	5,835
	3" IMC	3,290
Y*	3/4" IMC	7,145
	1-1/2" IMC	3,750
Grand Total		23,435

*Red conduit contains wiring for classified systems, and installation and support is more difficult than for “black”, unclassified wiring systems.

6.3 ATTACHMENT 3, ELECTRICAL BULK MATERIAL LIST

Description: Vitrification Bulk Materials, Cable and Conduit
Reference: E-E2-K-02229 (MCC-24M), E-E2-K-02230 (MCC-31M), E-EB-K-00705, J-J8-K-00017, E-EB-K-00705, E-EB-K-00024

All Conduits are IMC type.

				Cable Estimates (Exterior GB)		GB Pentr	(Interior. GB)	Shared Rcwy/Tray	Raceway Estimates				
Item #	**From Equipment**	**To Equipment**	**XGB Length (A) (ft)**	**Qty (A)**	**Cable size/type**	**Conn. (Qty)**	**NGB Length (B) (ft)**	**Length (C) (ft)**	**Length (D) (ft)**	**Qty (D)**	**Size/Desc. (D)**	**Red**	**Notes/Comments**
1	ELNH-MCC-31M/24M	Power Supply VIT-JX-001A,B,C thru' 010A,B,C	255	30	3/C#4 w/1-#10gnd			220	15	10	WIRE WAY 6"X6"X4"	N	Ref:E-E2-K-02229 E-E2-K-02230
2	ELNH-MCC-31M/24M	Circulating Pump VIT-P-001. 002 and 003	220	3	3/C #12 w/1-#12gnd	0			200	3	1" IMC	N	Ref:E-E2-K-02229 E-E2-K-02230
3	120/208 V Power Panel ELLV-PNL-009	Video Equip Rack VIT-VER-001	60	1	2/C #12	0			40	1	3/4" IMC	N	Ref:E-E2-K-02229 E-E2-K-02230 E-EB-K-00705
4	120/208 V Power Panel ELLV-PNL-009	Pan/Tilt Controller VIT-PTC-001	60	1	2/C #12				40	1	3/4" IMC	N	Ref:E-E2-K-02229 E-E2-K-02230 E-EB-K-00705
5	120/208 V Power Panel ELLV-PNL-009	Main Video Mon Rack ICS-VER-001	300	1	2/C #12				280	1	3/4" IMC	N	Ref:E-E2-K-02229 E-E2-K-02230 E-EB-K-00705
6	120/208 V Power Panel ELLV-PNL-009	Vit Can Weigh Scale	170	1	2/C #12	1	15		135	1	3/4" IMC	N	Ref:E-E2-K-02229 J-J8-K-00017
7	120/208 V Power Panel ELLV-PNL-009	I/O Cabinets	220	6	2/C #12			55	145	6	3/4" IMC	N	Ref:E-E2-K-02229 J-J8-K-00017
8	120/208 V Power Panel ELLV-PNL-010	Can Transfer Device	185	10	2/C #12	5	15		150	10	2" IMC	N	Ref:E-E2-K-02229 J-J8-K-00017
9	120/208 V Power Panel ELLV-PNL-010	Can Turn Table	185	10	2/C #12	5	15		150	10	2" IMC	N	Ref:E-E2-K-02230
10	MCA-CAB-002 thru' MCA-CAB-006	Melter Gamma Monitors/GB Monitors/Exhaust Gamma Monitors	95	50	Vendor Cable - 5/C #22				75	50	1-1/2" IMC	Y	Ref:E-E2-K-02229 J-J8-K-00017 Vendor cable size is assumed (5C #22)

6.3 ATTACHMENT 3, ELECTRICAL BULK MATERIAL LIST

Description: Vitrification Bulk Materials, Cable and Conduit
Reference: E-E2-K-02229 (MCC-24M), E-E2-K-02230 (MCC-31M), E-EB-K-00705, J-J8-K-00017, E-EB-K-00705, E-EB-K-00024

All Conduits are IMC type.

				Cable Estimates (Exterior GB)		GB Pentr	(Interior. GB)	Shared Rcwy/Tray	Raceway Estimates				
Item #	**From Equipment**	**To Equipment**	**XGB Length (A) (ft)**	**Qty (A)**	**Cable size/type**	**Conn. (Qty)**	**NGB Length (B) (ft)**	**Length (C) (ft)**	**Length (D) (ft)**	**Qty (D)**	**Size/Desc. (D)**	**Red**	**Notes/Comments**
11	MCA-CAB-002 thru' MCA-CAB-006	Melter Hopper/Melter Vit Can Bar Code Readers A & B, Empty Vit Can and Full Vit Can Bar Code Readers	95	22	1 PR #16 SH.				75	95	3/4" IMC	Y	Ref: J-J8-K-00017
12	MCA-CAB-002	Vit Can Weigh Scale VIT-SCL-001	120	1	1 PR #16 SH.			80	20	1	3/4" IMC	Y	Ref: J-J8-K-00017
13	NOT USED												
14	Power Supply VIT-JX-001A,B,C thru' 010A,B,C	Melter # 1 thru' 10 Heating Coil VIT-HTR-001A, B, C thru' 010A, B, C	80	60	Vendor Cable RF cable	60	10		50	10	WIRE WAY 6"X6"X4"	N	Ref:E-E2-K-02229 E-E2-K-02230 Vendor cable size is assumed (Two Power cables per Heater Coil))
15	Power Supply VIT-JX-001A,B,C thru' 010A,B,C	Melter # 1 thru' 10 Heating Coil VIT-HTR-001A, B, C thru' 010A, B, C	80	60	Vendor Cable Sensor/Control	60	10		50	10	WIRE WAY 6"X6"X4"	N	Ref:E-E2-K-02229 E-E2-K-02230 Vendor cable size is assumed (One Control + One Sensor per Heater Coil))
16	Video Equip Rack VIT-VER-001	Vitrification Melter Glovebox # 1 - # 4	290	12	Vendor Cable RG6 + 6/c # 16 Control Cable	12	10	220	40	4	2" IMC	N	Ref: E-EB-K-00705 Vendor cable size is assumed. 1-3" Conduit (220' long) to a Pull Box near the GBs assumed.
17	Video Equip Rack VIT-VER-001	Vitrification Melter Glovebox # 5 - # 10	295	18	Vendor Cable RG6 + 6/c # 16 Control Cable	18	10	175	90	6	2" IMC	N	Ref: E-EB-K-00705 Vendor cable size is assumed. 1-3" Conduit (175' long) to a Pull Box near the GBs assumed.

6.3 ATTACHMENT 3, ELECTRICAL BULK MATERIAL LIST

Description: Vitrification Bulk Materials, Cable and Conduit
Reference: E-E2-K-02229 (MCC-24M), E-E2-K-02230 (MCC-31M), E-EB-K-00705, J-J8-K-00017, E-EB-K-00705, E-EB-K-00024

All Conduits are IMC type.

				Cable Estimates (Exterior GB)		GB Pentr	(Interior. GB)	Shared Rcwy/Tray	Raceway Estimates				
Item #	**From Equipment**	**To Equipment**	**XGB Length (A) (ft)**	**Qty (A)**	**Cable size/type**	**Conn. (Qty)**	**NGB Length (B) (ft)**	**Length (C) (ft)**	**Length (D) (ft)**	**Qty (D)**	**Size/Desc. (D)**	**Red**	**Notes/Comments**
18	Video Equip Rack VIT-VER-001	Main Video Mon Rack ICS-VER-001	320	1	Vendor Cable Data Cable				300	1	3/4" IMC	N	Ref: E-EB-K-00705 Vendor cable size is assumed
19	Video Equip Rack VIT-VER-001	Video Monitor VIT-MON-001	20	1	Vendor Cable RG6 + 6/c # 16 Control Cable					0	0	N	Ref: E-EB-K-00705 Vendor cable size is assumed. Internal bare cable. No raceway required.
20	Video Equip Rack VIT-VER-001	Vit Rm 1 Pan/Tilt Camera VIT-CCTV-001 thru' 005	280	5	Vendor Cable RG6 + 6/c # 16 Control Cable			200	60	5	2" IMC	N	Ref: E-EB-K-00705 Vendor cable size is assumed. 1-3" Conduit (200' long) to a Pull Box near the room cameras assumed.
21	Pan/Tilt Controller VIT-PTC-001	Vit Rm 1 Pan/Tilt Camera VIT-CCTV-001 thru' 005	280	5	Vendor Cable RG6 + 6/c # 16 Control Cable			200	60	5	2" IMC	N	Ref: E-EB-K-00705 Vendor cable size is assumed. 1-3" Conduit (200' long) to a Pull Box near the room cameras assumed.
22	Main Video Mon Rack ICS-VER-001	Video Monitor ICS-MON-001	20	1	Vendor Cable RG6 + 6/c # 16 Control Cable				0	0	0	N	Ref: E-EB-K-00705 Vendor cable size is assumed. Internal bare cable. No raceway required.
23	ICS-CAB-001 I/O	Vitrification Melter VIT-TK-001	134	40	1 PR #16 SH.	1	10		104	1	2" IMC	N	Ref: J-J8-K-00024
24	ICS-CAB-002 I/O	Vitrification Melter VIT-TK-002	144	40	1 PR #16 SH.	1	10		114	1	2" IMC	N	Ref: J-J8-K-00024
25	ICS-CAB-003 I/O	Vitrification Melter VIT-TK-003	155	40	1 PR #16 SH.	1	10		125	1	2" IMC	N	Ref: J-J8-K-00024
26	ICS-CAB-004 I/O	Vitrification Melter VIT-TK-	180	40	1 PR #16 SH.	1	10		150	1	2" IMC	N	Ref: J-J8-K-00024

6.3 ATTACHMENT 3, ELECTRICAL BULK MATERIAL LIST

Description: Vitrification Bulk Materials, Cable and Conduit
Reference: E-E2-K-02229 (MCC-24M), E-E2-K-02230 (MCC-31M), E-EB-K-00705, J-J8-K-00017, E-EB-K-00705, E-EB-K-00024

All Conduits are IMC type.

				Cable Estimates (Exterior GB)		GB Pentr	(Interior. GB)	Shared Rcwy/Tray	Raceway Estimates				
Item #	**From Equipment**	**To Equipment**	**XGB Length (A) (ft)**	**Qty (A)**	**Cable size/type**	**Conn. (Qty)**	**NGB Length (B) (ft)**	**Length (C) (ft)**	**Length (D) (ft)**	**Qty (D)**	**Size/Desc. (D)**	**Red**	**Notes/Comments**
		004											
27	ICS-CAB-005 I/O	Vitrification Melter VIT-TK-005	160	40	1 PR #16 SH.	1	10		130	1	2" IMC	N	Ref: J-J8-K-00024
28	ICS-CAB-006 I/O	Vitrification Melter VIT-TK-006	150	40	1 PR #16 SH.	1	10		120	1	2" IMC	N	Ref: J-J8-K-00024
29	ICS-CAB-007 I/O	Vitrification Melter VIT-TK-007	135	40	1 PR #16 SH.	1	10		105	1	2" IMC	N	Ref: J-J8-K-00024
30	ICS-CAB-008 I/O	Vitrification Melter VIT-TK-008	142	40	1 PR #16 SH.	1	10		112	1	2" IMC	N	Ref: J-J8-K-00024
31	ICS-CAB-009 I/O	Vitrification Melter VIT-TK-009	175	40	1 PR #16 SH.	1	10		145	1	2" IMC	N	Ref: J-J8-K-00024
32	ICS-CAB-010 I/O	Vitrification Melter VIT-TK-010	155	40	1 PR #16 SH.	1	10		125	1	2" IMC	N	Ref: J-J8-K-00024
33	ICS-CAB-011 I/O	Vitrification GB I/O (-40 EL)	165	30	1 PR #16 SH.	1	10		135	1	2" IMC	N	Ref: J-J8-K-00024
34	I/O Cabinet ICS-CAB-001 thru' 004	VIT-INST-100	120	4	50 - PR # 16 SH				100	4	3" IMC	N	Ref: J-J8-K-00024
35	I/O Cabinet ICS-CAB-005 thru' 010	VIT-INST-200	120	6	50 - PR # 16 SH				100	6	3" IMC	N	Ref: J-J8-K-00024
36	I/O Cabinet ICS-CAB-011	VIT-INST-200	120	1	16 - PR # 16 SH				100	1	2" IMC	N	Ref: J-J8-K-00024
37	VIT-INST-100	Vitrification Melter VIT-TK-001	100	50	1 PR #16 SH.	1	10		70	1	3" IMC	N	Ref: J-J8-K-00024
38	VIT-INST-100	Vitrification Melter VIT-TK-002	100	50	1 PR #16 SH.	1	10		70	1	3" IMC	N	Ref: J-J8-K-00024
39	VIT-INST-100	Vitrification Melter VIT-TK-003	100	50	1 PR #16 SH.	1	10		70	1	3" IMC	N	Ref: J-J8-K-00024
40	VIT-INST-100	Vitrification Melter VIT-TK-004	100	50	1 PR #16 SH.	1	10		70	1	3" IMC	N	Ref: J-J8-K-00024

6.3 ATTACHMENT 3, ELECTRICAL BULK MATERIAL LIST

Description: Vitrification Bulk Materials, Cable and Conduit
Reference: E-E2-K-02229 (MCC-24M), E-E2-K-02230 (MCC-31M), E-EB-K-00705, J-J8-K-00017, E-EB-K-00705, E-EB-K-00024

All Conduits are IMC type.

				Cable Estimates (Exterior GB)		GB Pentr	(Interior. GB)	Shared Rcwy/Tray	Raceway Estimates				
Item #	**From Equipment**	**To Equipment**	**XGB Length (A) (ft)**	**Qty (A)**	**Cable size/type**	**Conn. (Qty)**	**NGB Length (B) (ft)**	**Length (C) (ft)**	**Length (D) (ft)**	**Qty (D)**	**Size/Desc. (D)**	**Red**	**Notes/Comments**
41	VIT-INST-200	Vitrification Melter VIT-TK-005	100	50	1 PR #16 SH.	1	10		70	1	3" IMC	N	Ref: J-J8-K-00024
42	VIT-INST-200	Vitrification Melter VIT-TK-006	100	50	1 PR #16 SH.	1	10		70	1	3" IMC	N	Ref: J-J8-K-00024
43	VIT-INST-200	Vitrification Melter VIT-TK-007	100	50	1 PR #16 SH.	1	10		70	1	3" IMC	N	Ref: J-J8-K-00024
44	VIT-INST-200	Vitrification Melter VIT-TK-008	100	50	1 PR #16 SH.	1	10		70	1	3" IMC	N	Ref: J-J8-K-00024
45	VIT-INST-200	Vitrification Melter VIT-TK-009	100	50	1 PR #16 SH.	1	10		70	1	3" IMC	N	Ref: J-J8-K-00024
46	VIT-INST-200	Vitrification Melter VIT-TK-010	100	50	1 PR #16 SH.	1	10		70	1	3" IMC	N	Ref: J-J8-K-00024
47	VIT-INST-200	Vitrification GB I/O (-40 EL)	100	16	1 PR #16 SH.	1	10		70	1	2" IMC	N	Ref: J-J8-K-00024
48	Video Equip Rack VIT-VER-001	Pull Box near Vitrification Melter Glovebox # 1 - # 4							220	2	3" IMC	N	Ref: E-EB-K-00705 Vendor cable size is assumed. 1-3" Conduit (220' long) to a Pull Box near the GBs assumed.
49	Video Equip Rack VIT-VER-001	Pull Box near Vitrification Melter Glovebox # 5 - # 10							175	2	3" IMC	N	Ref: E-EB-K-00705 Vendor cable size is assumed. 1-3" Conduit (175' long) to a Pull Box near the GBs assumed.
50	Video Equip Rack VIT-VER-001	Pull Box (Vit Rm 1 Pan/Tilt Camera VIT-CCTV-001 thru' 005)							200	2	3" IMC	N	Ref: E-EB-K-00705 Vendor cable size is assumed. 1-3" Conduit (200' long) to a Pull Box near the room cameras assumed.

6.3 ATTACHMENT 3, ELECTRICAL BULK MATERIAL LIST

Description: Vitrification Bulk Materials, Cable and Conduit
Reference: E-E2-K-02229 (MCC-24M), E-E2-K-02230 (MCC-31M), E-EB-K-00705, J-J8-K-00017, E-EB-K-00705, E-EB-K-00024

All Conduits are IMC type.

				Cable Estimates (Exterior GB)		GB Pentr	(Interior. GB)	Shared Rcwy/Tray	Raceway Estimates				
Item #	**From Equipment**	**To Equipment**	**XGB Length (A) (ft)**	**Qty (A)**	**Cable size/type**	**Conn. (Qty)**	**NGB Length (B) (ft)**	**Length (C) (ft)**	**Length (D) (ft)**	**Qty (D)**	**Size/Desc. (D)**	**Red**	**Notes/Comments**
51	Pan/Tilt Controller VIT-PTC-001	Pull Box (Vit Rm 1 Pan/Tilt Camera VIT-CCTV-001 thru' 005)							200	2	3" IMC	N	Ref: E-EB-K-00705 Vendor cable size is assumed. 1-3" Conduit (200' long) to a Pull Box near the room cameras assumed.
52	Equipment	Ground Grid	900	1	2/0 Gnd							N	Grounding
53	TOTAL NO. OF GB PENETRATIONS					172							

SRP DRAWING NO. N/A

EQUIPMENT: BILL OF MATERIAL					
ITEM NO	EQUIPMENT NUMBER	EQUIPMENT NAME	REQUIRED	REF. DOCUMENT	DETAILS
1	GBS-GB-(002-011)	MELTER GLOVEBOX	10	M-SPP-K-00059	
2		BAGOUT PORT	10		
3	VIT-TK-(001-01D)	MELTER VESSEL	10	M-DS-K-00088	
4	VIT-HTR-(001-010)A	25KW INDUCTION HEATER	10	M-DS-K-00090	
5	VIT-HTR-(001-010)B	25KW INDUCTION HEATER	10	M-DS-K-00090	
6	VIT-HTR-(001-010)C	25KW INDUCTION HEATER	10	M-DS-K-00090	
7	VIT-RDR-(011-020)	CAN BAR CODE READER	10	J-JD-K-00068	
8	VIT-RDR-(001-010)	HOPPER BAR CODE READER	10	J-JD-K-00068	
9	VIT-RE-(001A-001V)	GAMMA HOLD-UP MONITOR	20	J-JD-K-00069	
10	VIT-RE-(002A-002V)	GAMMA HOLD-UP MONITOR	20	J-JD-K-00069	
11	VIT-RE-(003A-003K)	GAMMA HOLD-UP MONITOR	10	J-JD-K-00069	FOR EXHAUST DUCTS. (NOT SHOWN)
12	VIT-TUTB-(001-010)	CAN TURNTABLE	10	M-DS-K-00091	
13	VIT-GRIP-(001-010)	CAN TRANSFER DEVICE	10	M-DS-K-00091	
14	VIT-PCTV-(001A-010(	CAMERA	30	E-DS-K-00021	

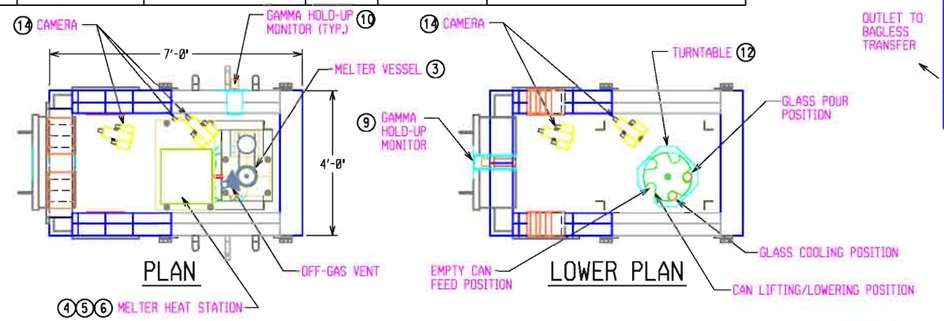

PLAN

LOWER PLAN

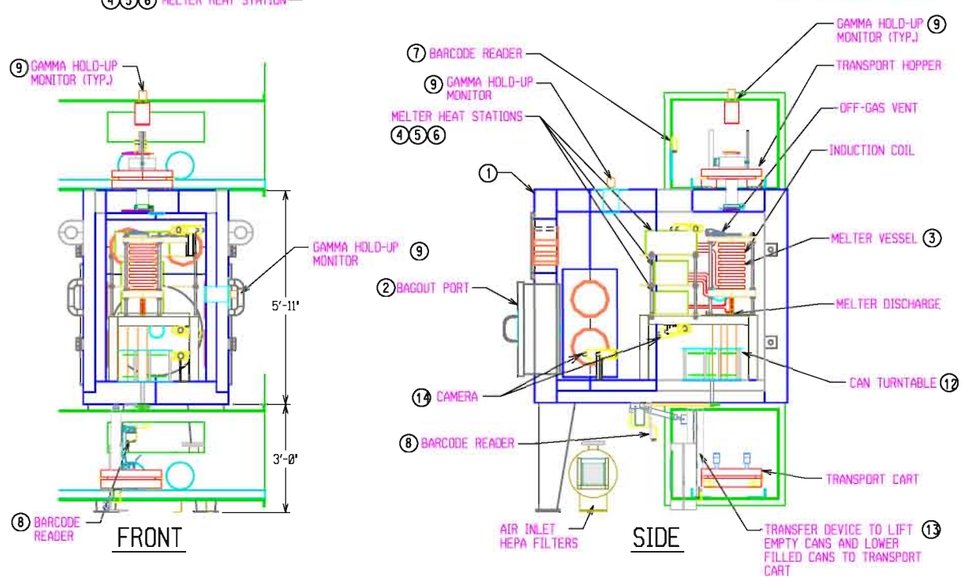

FRONT

SIDE

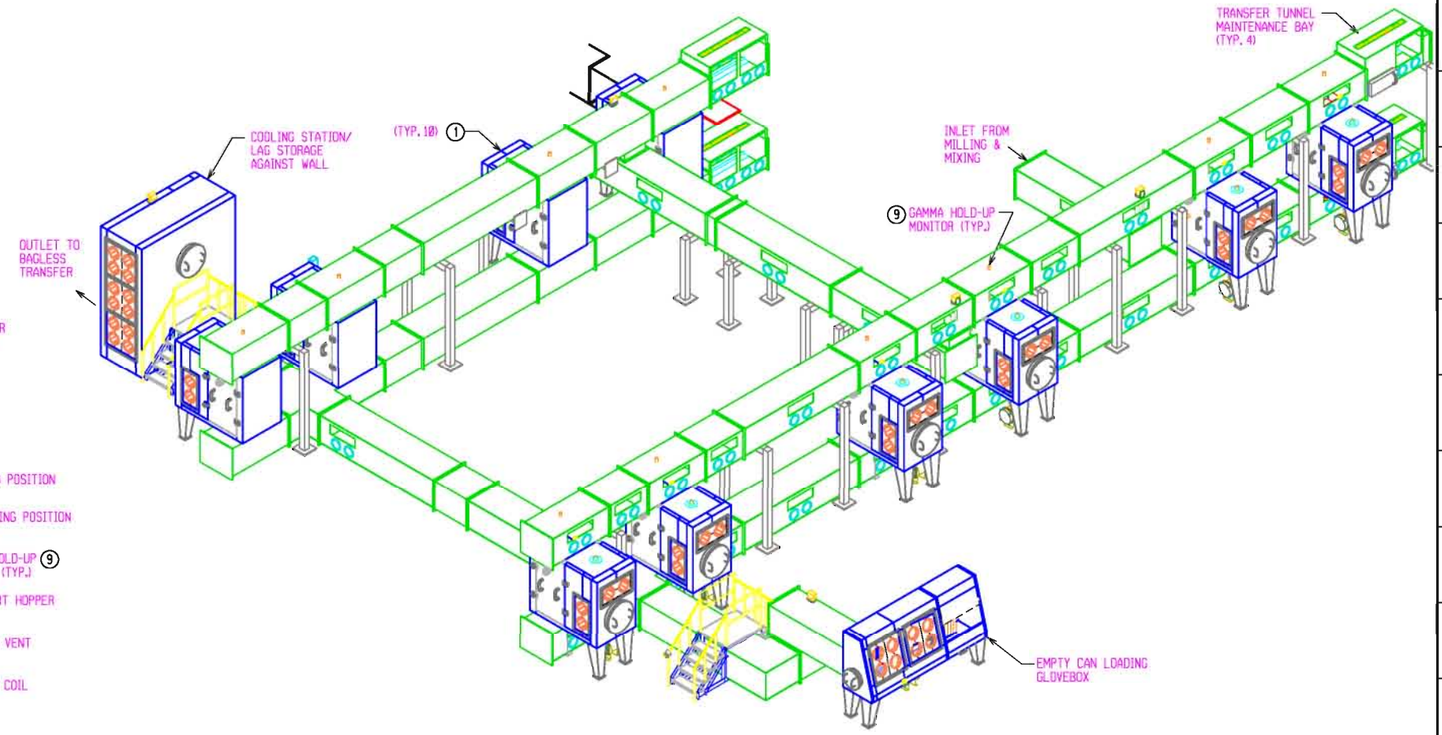

ISOMETRIC

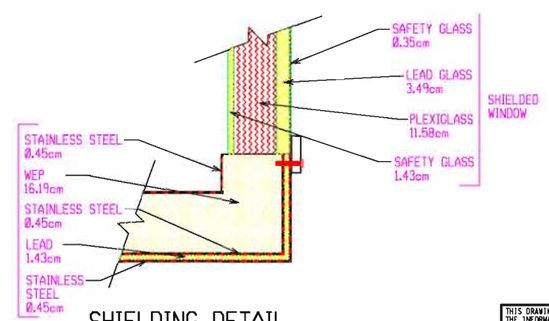

SHIELDING DETAIL

UNCLASSIFIED

DOES NOT CONTAIN UNCLASSIFIED CONTROLLED NUCLEAR INFORMATION

ADC &/or Reviewing Official: E.C. TEFT III S. ENG

Date: 2/26/07

NOTE:

1. DUCT INLET & EXHAUST CONNECTIONS NOT SHOWN.

LATEST D REVISION

SKETCH NUMBER: SK-DE-VIT-0003

PROJ.	REV. NO.	DATE	REVISION	PRP'D	LEAD ENG	CHK'D	APRV'D	APRV'D	APRV'D

PROJ.	REV. ND.	DATE	REVISION	PRP'D	LEAD ENG	CHK'D	APRV'D	APRV'D	APRV'D
M09A	A	9/27/06	ISSUED FOR PROJECT USE - SHIELDING CONCEPT - PUDE1350		(SIGNATURES ON FILE)				
M09A	B	10/17/06	ISSUED FOR CDR (PRELIMINARY), ACTIVITY - PUDE1430	VMS	DN	ECT	DF	BCP	NA
M09A	C	1/18/07	ISSUED FOR CDR (PRELIMINARY), ACTIVITY - PUDE71T10	VS	ECT	DN	DF	BCP	N/A
M09A	D	2/26/07	ISSUED FOR CDR (PRELIMINARY) REISSUED FOR DOCUMENT ALIGNMENT	HCC	ECT	DN	DF	BCP	N/A

THIS DRAWING HAS BEEN FURNISHED BY THE SAVANNAH RIVER SITE. THE INFORMATION AND KNOW HOW THEREON MAY NOT BE USED NOR THE DRAWING REPRODUCED WITHOUT WRITTEN PERMISSION OF THE PRIME CONTRACTOR. ALL REPRODUCTIONS IN WHOLE OR IN PART, INCLUDING VENDOR'S SHOP DRAWINGS, SHALL BEAR OR REFER TO THIS STAMP.

REFERENCE DRAWINGS

M-M8-K-00007	VITRIFICATION BLOCK FLOW DIAGRAM
M-M8-K-00015	MATERIAL HANDLING BLOCK FLOW DIAGRAM
M-M5-K-01947	AIR FLOW DIAGRAM
M-M5-K-01948	DRY AIR FLOW DIAGRAM
M-M6-K-02271	DRY AIR P&ID
M-M6-K-02272	GLOVEBOX P&ID

REFERENCE STANDARDS

UNITED STATES DEPARTMENT OF ENERGY

SAVANNAH RIVER SITE

BLDG. NO.	SITE CLEARANCE NO.	DESIGN AREA NO.	DESIGN GROUP
KAC	N/A	100-K	PDBCS

TITLE

PLUTONIUM DISPOSITION PROJECT

VITRIFICATION SYSTEM GLOVEBOX & SHIELDING LAYOUT

PLAN & SECTIONS

SCALE	SRP DRAWING NO.	SHEET NO.	LATEST REVISION
1/2"=1'-0"	N/A	1 OF 1	D

W.S. # ( ) . REF FILES VMS Mon Feb 26 11:03:20 2007 LEVELS 1111111111222222222333333333444444444555555555566666 1234567890123456789012345678901234567890123456789012345678901234567890123 PSC= PLOT DATE

DRAWN BY (ORIG): V. SCHICK LAST CADD REV. BY: V. SCHICK TIME DATE: 01/16/07

Scale shown on this drawing is only applicable when plotted at 22"x34" (actual drawing size)

PLUTONIUM DISPOSITION PROJECT (U)

Project M09A

SCOPE OF WORK

M-SOW-K-00013 Revision 0
For
Feed Preparation System (U)

Originated by:	N. Shanmuganathan Nagarjan Shanmuganathan Principal Engineer	Date: 4/9/2007
Reviewed by:	Marc Cameron Marc Cameron Mechanical Engineer	Date: 4/9/07
Approved by:	D. B. Randall Bill Randall Design Authority Lead	Date: 9APR07
Approved by:	Clayton Holloway Clayton Holloway Mechanical Lead	Date: 4/9/07
Approved by:	Roderick King Roderick King Electrical/I&C Lead	Date: 4/9/07
Approved by:	Ghada S. Elchoufi Ghada Elchoufi C/S/A Lead	Date: 4/9/2007
Approved by:	Drew Negus Drew Negus Plant Design Lead	Date: 4-10-07
Approved by:	John Hammond John Hammond Construction Lead	Date: 4-9-07
Approved by:	B.C. Patel B.C. Patel Project Engineer	Date: 4/10/07

UNCLASSIFIED
DOES NOT CONTAIN UNCLASSIFIED CONTROLLED NUCLEAR INFORMATION

DC/RO: Ghada Elchoufi
GSE, 4/9/07

Revision Page

Revision	Revision Date	Affected Section	Description of Change
0	4/10/2007	N/A	Initial Issue

Table of Contents

Section Page

1.0 SCOPE 4
1.1 General Description 4
1.2 Background 4
2.0 ACRONYMS/ABBREVIATIONS 4
3.0 DESCRIPTION OF PHYSICAL WORK 5
3.1 Performance Category and Functional Classification (SS, PS) 5
3.2 Mechanical/Nuclear/Process 6
3.3 Instrumentation and Controls 7
3.4 Electrical 9
3.5 Plant Design 10
3.6 Civil/Structural/Architectural. 10
4.0 ASSUMPTIONS 10
4.1 General Assumptions 10
4.2 Specific Assumptions 11
5.0 TECHNOLOGY DEVELOPMENT ISSUES 12
6.0 REFERENCES 12
6.1 References List 12
6.2 Design Input Documents 12
6.3 Applicable SRS & Industry Codes, Guides and Standards 13
6.4 Related Scopes of Work (SOW) 13
6.5 Miscellaneous 14
7.0 ATTACHMENTS 14
Attachment 1: Bulk Material – C/S/A 15
Attachment 2: Bulk Material – Electrical Cable & Conduit 16

1.0 SCOPE

1.1 General Description

This Scope of Work (SOW) Covers the Feed Preparation System for the Plutonium Disposition Project.

Feed Preparation receives 3013 containers of oxide from Material Receipt & Storage and transport cans of oxide from Oxidation. The output from Feed Preparation is batch cans with 2 kg of crushed Pu oxide, with a particle diameter less than 1 mm, that are sent to Milling/Mixing.

1.2 Background.

The Office of Environmental Management has approximately 13 metric tons (MT) of plutonium in approximately 21 MT bulk materials without any defined disposition path. The Plutonium Disposition (PUD) Project is critical to meet the Department of Energy's strategic goal of providing a responsible resolution to the permanent disposal of the nation's excess high-level radioactive materials and waste; and to enable the cleanup of Environmental Management sites.

The Plutonium Disposition Facility (PDF) will be located at the K-Area Complex (KAC) to disposition up to approximately 13 Metric Tons (MT) of Environmental Management (EM) owned surplus plutonium. The facility will utilize a vitrification process to vitrify plutonium into a lanthanide borosilicate (LaBS) glass matrix. This glass will be packaged into bagless transfer cans and placed inside a Defense Waste Processing Facility (DWPF) type canister. The canister will be transported to DWPF and filled with High Level Waste (HLW) glass. The DWPF canisters will be stored in the Glass Waste Storage Buildings and later transported to the geologic repository at Yucca Mountain.

This Scope of Work (SOW) has been developed for the purpose of facilitating **construction** cost and schedule estimates for the Conceptual Design Report (CDR) on the PUD project. The input to this SOW was the approved technical baseline consisting of a Facility Design Description (FDD) and associated System Design Descriptions (SDD). Every intent has been made to assure alignment and consistency between this SOW and the appropriate sections of the technical baseline, in order to provide accurate estimates. This SOW is not a PUD technical baseline document. A more detailed description of the system can be found in the associated SDD listed in the reference section.

A HOLD is placed to identify information that is preliminary in nature, results from a design uncertainty, originates from insufficient documentation, needs verification, or identifies a discrepancy. A **TBD** is placed to identify places in the text where numeric values or descriptive information is not available at the time that the current revision of the SOW is released.

2.0 ACRONYMS/ABBREVIATIONS

CHA	Consolidated Hazard Analysis
CPD	Can Puncture Device
DMO	Direct Metal Oxidation
DS	Design Services
DWPF	Defense Waste Processing Facility
EM	Environmental Management
GS	General Services

HEPA	High-Efficiency Particulate Air (filter)
HLW	High Level Waste
HVAC	Heating, Ventilation and Air Conditioning
KAC	K-Area Complex
LaBS	Lanthanide Borosilicate
LIBS	Laser Induced Breakdown Spectrometer
MC&A	Material Control and Accountability
MT	Metric Ton
NDA	Non Destructive Assaying
NFPA	National Fire Protection Association
PC	Performance Category
PDI	Pressure Differential Indicator
Pu	Plutonium
PUD	Plutonium Disposition
PDF	Plutonium Disposition Facility
PuVit	Plutonium Vitrification
SC	Safety Class
SDD	System Design Description
SOW	Scope Of Work
SRS	Savannah River Site
SS	Safety Significant
SSC	Structure, System, Component
TBD	To Be Determined
UCNI	Unclassified Controlled Nuclear Information
VFD	Variable Frequency Drive
WSRC	Washington Savannah River Company

3.0 DESCRIPTION OF PHYSICAL WORK

3.1 Performance Category and Functional Classification (SS, PS)

3.1.1 Performance Category

3.1.1.1 The performance category of the Feed Preparation System is PC-1.

3.1.2 Functional Classification

3.1.2.1 The systems in this SOW shall be designed in accordance with the requirements of WSRC Manual WSRC-E7, Conduct of Engineering and Technical Support Procedure 2.25 Rev 14, “Functional Classification”, as follows:

A. Crusher

1. Functional Classification – Production Support (PS)

B. 3013 Can Puncture Device

1. Functional Classification – Safety Significant (SS)

C. LIBS

1. Functional Classification - Production Support (PS)

3.2 Mechanical/Nuclear/Process

3.2.1 Feed Preparation Glovebox Components

3.2.1.1 The following Feed Preparation components will be contained within the Feed Preparation Glovebox system. Reference sketch SK-DE-FPS-0001 for layout and location of components in the glovebox. The major components are:

A. Lag storage rack (3 each)-one 5 position and two 3 place positions. There is also a 10 position lag storage rack in the Exit Staging glovebox.

B. Crusher (1 each)

1. Refer to M-M8-K-00012 for the block flow diagram. The model of the crusher being considered and to be tested in SRNL is a jaw crusher made by Fritsch, model 1 with the following characteristics:
   - Top opening 65 mm X 65 mm with a maximum feed size of 60 mm.
   - Maximum continuous throughput 140 kg/h
   - Adjustable bottom discharge size 1 – 15 mm
   - Eccentric oscillations 308 / min
   - Motor available in 400 V/3 phase: 230 V / 1 phase: 115 V / 1 phase.

C. Can Puncture Device (1 each)

1. Refer to M-M8-K-00012 for the block flow diagram. The CPD used in the previous projects is being modified to meet the pressure sensing requirement and other safety features to include Safety Significant controls. The development and testing of a CPD to meet the safety significant controls is a planned activity under NMM-TTR-2006-00011.

D. Outer/Inner 3013 Can Cutter/Opener

1. Details of the can cutter are in Data Sheet M-DS-K-00181. The can cutters are to be used to open the Outer 3013 container and also for opening the Inner 3013 container and convenience cans that cannot be opened manually.

E. Gantry Hoist (3 ea)

1. Details of a typical Gantry Hoist are in Data Sheet M-DS-K-00109. The hoists will be used for moving containers inside the gloveboxes.

F. Splitter dumper (1 ea) Equip. No. FPS-STAT-002

G. Dustless Dumper (1 ea) Equip. No. FPS-STAT-001

H. Trolley Cart (2 ea)

I. Telescoping Tray (2ea) for Air Lock use.

3.2.2 Glovebox

3.2.2.1 Drawing SK-DE-FPS-0001 shows the glovebox layout. The present glovebox arrangement allows access to both sides.

3.2.2.2 These gloveboxes are ventilated with room air and dry air which is drawn through an inlet HEPA filter and exhausted through additional HEPA filters to the Glovebox Exhaust System. See drawings M-M5-K-01969 and M-M6-K-02292 for glovebox exhaust flow diagram and piping and instrumentation diagram.

A. HEPA filters in stainless steel housing. (3 ea.)

B. Non-testable HEPA filter mounted to skin of glovebox. (3 ea.).

C. 10” automatic damper, pneumatically operated, stainless (1 ea.)

D. 4” isolation dampers, stainless (13 ea.)

E. 4” balancing damper, stainless (3 ea.)

F. ¼” three-way ball valves, stainless (15 ea.)

G. 10” isolation damper, stainless (3 ea.)

H. 6” balancing damper (1 ea.)

I. 6” isolation damper (2 ea.)

3.2.3 LIBS

3.2.3.1 Refer to J-J8-K-00029 for the LIBS material list.

3.3 Instrumentation and Controls

The Feed Preparation System consists of can cutters, crusher and splitter with supporting equipment, and test equipment as defined in Air Flow P&ID M-M6-K-02292, Material Handling Block Flow Diagram M-M8-K-00012, and Glovebox layouts SK-DE-FPS-0001. Controls are defined in the Feed Preparation Control Block Diagram J-J8-K-00047 and Logic J-J2-K-01582. For Cable and raceway estimated bulk quantities refer to Attachment 2. Instrument Cabinet FPS-INST-100 will be used to house transmitters associated with the equipment described below:

3.3.1 The following controls equipment is associated with the gantries and can cutter:

3.3.1.1 The gantries as defined in Data Sheet M-DS-K-00167 and layouts SK-DE-FPS-0001:

A. Total (3) gantry Hoist motors (FPS-HOI-001, 002, and 003)
B. Total (3) gantry consoles (FPS-CNSL-001, 002, and 003)

3.3.1.2. Can puncture and cutter devices

A. The puncture device (FPS-TOOL-031).
B. Total (2) Can cutters (FPS-CUTR-001 and 002)

The consoles for these three devices are FPS-CNSL-031, 032 & 033)

3.3.2 The following controls equipment is associated with the crusher:

3.3.2.1 The Crusher FPS-CRSH-001 as defined in Data Sheet M-DS-K-00075 and Block Flow Diagram M-M8-K-00012 involves the following control interfaces:

A. Total (1) motor for driving the crusher

B. Total (1) motor for dumping transport can into crusher with run and status controls

3.3.2.2 Crusher Discharge and Intake Dustless Valves - 2 Slide Gates each with the following control interfaces:

A. Total (4) Actuators
B. Total (8) Limit Switches

3.3.2.3 Dustless Dumper Shaker

A. Total (1) motor for dumping with run and status controls

3.3.3 The following controls equipment is associated with the splitter:

3.3.3.1 The Splitter dumper involves the following control interfaces:

A. Total (1) Dumper VFD motor metering device
B. Total (1) Scale cut off signal

3.3.3.2 Splitter Discharge and Intake Dustless Valves - 2 Slide Gates each with the following control interfaces:

A. Total (4) Actuators
B. Total (8) Limit Switches

3.3.4 For Feed Preparation Glovebox Feed through Penetration Connectors totals see Attachment 2. The Feed Prep Glovebox will contain the following:

3.3.4.1 Glovebox Airlocks as defined in SK-DE-FPS-0001 includes the following controls:

A. Total (12) Actuators
B. Total (4) Limit Switches

3.3.4.2 Glovebox Ventilation as defined in P&ID M-M6-K-02292 includes the following controls:

A. Total (6) Filter Pressure Differential Indicators (PDI's)
B. Total (3) Room PDI's
C. Total (1) Flow element and transmitter

3.3.4.3 Glovebox Maintenance Exhaust Air Flow Valve as defined in P&ID M-M6-K-02292 includes the following controls:

A. (1) Modulating Valve with limit switches

3.3.5 Instrument Cabinet FPS-INST-100 will house transmitters required by the above equipment.

3.3.6 The installation of the Feed Prep ICS I.O. cabinet ICS-CAB-030 to be located in the -20' Melter I/O Support Room and the OCS workstation ICS-OWS-015 to be located in the Feed Preparation/Oxidation Control Room are included in the ICS-J-SOW-K-00002 and defined in the Control Automation Plan J-PMP-K-00001 and the ICS Network Block Diagram J-J8-K-00050. These items are required for system operation, but are not included within the Feed Prep Scope of Work.

3.3.7 MC&A Equipment (reference Control Block Diagram J-J8-K-00025) shows minimum.

3.3.7.1 Scales (Total 2) (there are 3 scales per SK-DE-FPS-0001)

1. The 3013 weigh scale FPS-SCL-001 (Data Sheet J-JD-K-00153) weighs the 3013's coming into Feed Prep from Material Receipt prior to and after opening and removing contents.

2. The Transport Hopper weigh scale FPS-SCL-002 (Data Sheet J-JD-K-00153) weighs the Transport Hopper upon leaving full and returning empty from Milling and Mixing.

3.3.7.2 Barcode readers (Total 2) (there are 4 barcode readers per SK-DE-FPS-0001)

3.3.7.3

1. The 3013 barcode reader FPS-RDR-001 (Data Sheet J-JD-K-00155) scans the 3013's coming into Feed Prep from Material Receipt prior to opening.

2. The Transport Hopper barcode reader FPS-RDR-002 (Data Sheet J-JD-K-00155) scans the Transport Hopper upon leaving and returning from Milling and Mixing...

3.3.7.4 Gamma Holdup Monitors (Total 14)

1. Details of the gamma holdup monitors for measuring gamma holdup for MC&A are in Data Sheet J-JD-K-00152. The crusher has two (2) gamma holdup monitors FPS-RE/RT-001A and B.

2. Remaining twelve (12) Gamma Holdup monitors (FPS-RE/RT-002A through L) are located on top of the glovebox.

3.3.7.5 Gamma Isotopic System (Total 2)

Details of the gamma isotopic system used for plutonium isotopic ratio analysis for MC&A are in Data Sheet J-JD-K-00154. There is one gamma isotopic system in the entry FPS-GRIS-001 and one in the exit FPS-GRIS-002 area of the glovebox.

3.4 Electrical

3.4.1 The Feed Preparation System will contain the following major electrical components and services. The major electrical components will be provided as Engineered Equipment. This Scope of Work includes all raceway, power, control cables/terminations between field equipment and local controls. Provide onsite

setup and assembly of the referenced Engineered Equipment. Approximately 48 Glovebox Feed-thru Penetrations Connector Assemblies are required for service to electrical and I&C components/equipment located within glovebox.

3.4.1.1. Electrical power distribution will be as shown on single line drawing E-E2-K-02225.

3.4.1.2 The following will be the major electrical components:

A. Crusher (1)

B. Gantry Hoist (3)

C. Can cutters, can puncture device and dumpers will have electric motors

3.4.1.3 Work Scope includes installation of new grounding pigtails (approx. 10 ft. long with bolted connections) between new permanent electrical equipment and/or skids to the existing ground grid system. Small movable equipment will be grounded in accordance with code and or industry practices.

3.4.1.4 Provide and install Junction boxes, pull boxes, cables, conduits. Refer to Attachment 2 for Bulk Material Takeoff for cable and conduit descriptions and quantities. Unless otherwise stated, it is the responsibility of the installer to provide these commodities.

3.5 Plant Design

3.5.1 There is no piping needed inside the Feed Preparation System glovebox.

3.6 Civil/Structural/Architectural.

3.6.1 The C/S/A scope of work required for installation of supports for the major components of Feed Preparation Systems is as follows.

3.6.2 Glovebox. (Reference 6.1.1.8 SK-DE-FPS-0001, Rev.B)
The size of the Glovebox is approximately 46’x 4’ x10’ high and weighs approximately 120000 lbs. It is supplied with 24 legs with a 6”x6” plate at the bottom. Each leg will be welded to a base plate 12”x12”x ¾” thick and anchored with ¾” diameter bolts to the concrete slab.

4.0 ASSUMPTIONS

4.1 General Assumptions

4.1.1 The Construction Agency will be the SRS Construction Group. DS will provide engineering documentation for the installation of this equipment and will rely on the use of SRS Guides and Standards.

4.1.2 SRS Construction Group will procure all bulk materials.

4.1.3 SRS Construction Group will procure all off-the-shelf components and equipment identified on engineering data sheets that do not require testing or quality documentation.

4.1.4 All piping will be per ASME B31.3.

4.2 Specific Assumptions

4.2.1 Mechanical

4.2.1.1 All vessels with an ID 6” or greater shall be per ASME B&PVC Section VIII, Division 1 code stamped or an approved waiver. An appropriate SRS verification record will be competed for each vessel and pressure protection device (disk or valve).

4.2.2 Instrumentation and Controls

4.2.2.1 No specific assumptions have been made in this group.

4.2.3 Electrical

4.2.3.1 Assume that all permanently installed cabling will be routed in protected conduit/tray.

4.2.3.2 Cables installed within Gloveboxes will be routed within designated tray located within GB and/or supported from structural members within GB utilizing cable tie wraps.

4.2.3.3 Existing grounding grid is intact and adequate for grounding of new equipment.

4.2.3.4 Glovebox feed thru connector assemblies are functionally classified as SS and will be purchased as Engineering material.

4.2.4 Plant Design

4.2.4.1 No specific assumptions have been made in this group.

4.2.5 Civil/Structural/Architectural

4.2.5.1 Core drills will be required for routing commodities through existing walls or floors, which will be covered in C-SOW-K-00009.

4.2.5.2. Assume all anchor bolts used for equipment and commodity supports will be A36 Drillco Maxi bolts. Alternately, Hilti Kwik Bolts-TZ are acceptable for anchoring items.

4.2.5.3. Any components inside any equipment like cabinet are the integral of that equipment as one unit.

4.2.5.4. Functional classification for drilling holes in concrete surface is SC.

5.0 TECHNOLOGY DEVELOPMENT ISSUES

The glovebox based LIBS technique is still in the developmental phase. Testing is currently being performed with various surrogate nuclear material with impurities to quantify sample preparation and equipment operational parameters. Additional size reduction of the 1mm maximum particle size, output from the crusher, may be required along with addition of a binder material. Prior to sampling for LIBS analysis, the crusher output will require mandatory mixing to ensure homgeneity. At present, required sample compression, to avoid material dispersion during LIBS analysis, is the only required preparation step. Completed developmental testing output documents will define LIBS final requirements."

6.0 REFERENCES

6.1 References List

6.1.1. PUD project drawings, sketches, and data sheets.

6.1.1.1 M-DS-K-00181, Rev. A - Can Cutter Datasheet
6.1.1.2 M-DS-K-00075, Rev. B-Jaw Crusher Datasheet
6.1.1.3 M-DS-K-00167, Rev. A - FPS Gantry Hoist with Electric Gripper
6.1.1.4 M-M5-K-01969, Rev. B - FPS Glovebox Ventilation Air Flow Diagram
6.1.1.5 M-M6-K-02292, Rev. A - Glovebox - Exhaust System P&ID
6.1.1.6 M-M8-K-00004. Rev. A - Feed Preparation System Block Flow Diagram
6.1.1.7 M-M8-K-00012, Rev. A – Feed Preparation Block Flow Diagram
6.1.1.8 SK-DE-FPS-0001, Rev. B - Glovebox Layout Drawing
6.1.1.9 J-J8-K-00029 – Laser Induced Breakdown Spectrometer Layout, Rev.A
6.1.1.10 J-J8-K-00025, Rev. A - Feed Preparation MC&A Control Block Diagram
6.1.1.11 J-J8-K-00047, Rev. A - Feed Preparation Control Block Diagram
6.1.1.12 J-J8-K-00050, Rev. A – ICS Network Block Diagram
6.1.1.13 J-JD-K-00152, Rev. A – Gamma Holdup Monitor Datasheet
6.1.1.14 J-JD-K-00153, Rev. A – Datasheet Weigh Scale
6.1.1.15 J-JD-K-00154, Rev. A – Datasheet Gamma Isotopic System
6.1.1.16 J-JD-K-00155, Rev. A – Datasheet Bar Code Reader
6.1.1.17 E-E2-K-02225, Rev. C– Feed Prep. And Oxidation Area Single Line Diagram
6.1.1.18 E-E2-K-02229 – Electrical Power Distribution Single Line, Rev.D
6.1.1.19 E-E2-K-02230 – Electrical Power Distribution Single Line, Rev.D

6.2 Design Input Documents

The following Facility Design Description and System Design Descriptions are the baseline documents used to develop this SOW.

6.2.1 Facility Design Description

6.2.1.1 G-FDD-K-00001, Rev B "PUV Facility Design Description"

6.2.2 System Design Description

6..2.2.1 X-SYD-K-00004, Rev. B "Feed Preparation System (FPS) SDD"

6.2.3 Civil/Structural/Architectural

6.2.3.1 For Electrical Conduit and Equipment Supports, Use Cookbook C-CI-G-0039, Rev. 0

6.2.3.2 For Standard HVAC Duct support and details, Use cookbook C-CL-G-0001, Rev. 3

6.2.3.3 For routing and supports for NPS 2" and smaller piping, use cookbook no. C-CH-G-00004, Rev. 0

6.3 Applicable SRS & Industry Codes, Guides and Standards

6.3.1 Industry Codes and Standards

Not Applicable.

6.3.2 SRS Guides & Standards

6.3.2.1 SRSESM 15980-03-R, Mechanical Installation of General and Nuclear Services Instrumentation
6.3.2.1 WSRC-TM-95-1, Standard no. 15980, Rev. 6, "Mechanical Installation of Safety Class and Safety Significant Instrumentation"
6.3.2.3 WSRC-IM-95-58, Guide no. 15060, Rev.5, "Application of ASME B31.3"
6.3.2.4 WSRC-IM-95-58, Guide no. 15980-G, Rev.3, "Installation and Calibration of Instruments"
6.3.2.5 WSRC-IM-95-58, Guide no. 16051-G, Rev.2, "Installation of Electrical Raceway Systems and Cable Trays"
6.3.2.6 WSRC-IM-95-58, Guide no. 16052-G, Rev.2, "Installation of Electrical Wires, Cables and Terminations"
6.3.2.7 WSRC-IM-95-58, Guide no. 16053-G, Rev.2, "Installation of Electrical Equipment"
6.3.2.8 WSRC-IM-95-58, Guide No. 16056-G, Rev.2, "Installation of Grounding Systems."
6.3.2.9 WSRC-TM-95-1, Standard no. 03010, Rev.1, "Coring, Chipping and Drilling in Concrete.

6.4 Related Scopes of Work (SOW)

6.4.1 M-SOW-K-00020, HVAC System- Refer to M-M6-K-02269 Rev. A for Glove Box Ventilation P&ID, and M-M5-K-01946 Rev. A for Glove Box Ventilation Air Flow Diagram.
The furnace extraction module is contained in a region served by the remote handling area HVAC exhaust system and the glovebox is served by air hoods described in this related SOW. The HVAC will remove the furnace heat from the remote handling area.

6.4.2 C-SOW-K-00009, Rev. 0, Scope of Work for Structural and Architectural Modifications for Process Building.

6.4.3 E-SOW-K-00017, Rev. 0, Electrical General Scope of Work

6.4.4 J-SOW-K-00002, Rev. 0, Scope of work for ICS & MC&A Network.

6.4.5 M-SOW-K-00020, Rev. 0, Scope of Work for HVAC System.

6.4.6 M-SOW-K-00021, Rev. 0, Scope of Work for Balance of Plant Air and Gas Systems.

6.4.7 M-SOW-K-00022, Rev. 0, Scope of Work for Balance of Plant Water Systems.

6.4.8 S-SOW-K-00002, Rev.0, Scope of Work for Safeguards and Security System.

6.5 Miscellaneous

6.5.1 M&O-PUD-2006-00045, Plutonium Disposition Project Meeting Minutes – Feed Preparation System.

6.5.2 C-CI-G-0039, Rev: 0, Cookbook for Electrical Conduit and Equipment Supports, February 9,2005.

7.0 ATTACHMENTS

7.1 Attachment 1, Bulk Material List-C/S/A
7.2 Attachment 2, Bulk Material List-Electrical Cable and Conduit

Attachment 1: Bulk Material – C/S/A

Base plates	12” x 12” x ¾” thick	24 Ea.
Anchor Bolts	¾” Diameter	96 Ea.

Attachment 2: Bulk Material – Electrical Cable & Conduit

Exterior Glovebox Cables

Sum of Qty XGB (ft)	
Ext. Cable Size/Type	Total
3/C#12	3,660
1PR #16	21,850
GRIS VENDOR SUPPLIED CABLE	300
GIS VENDOR SUPPLIED CABLE	130
Grand Total	25,940

Interior Glovebox Cables

Sum of Qty NGB (ft)	
GB Cable Size/Type	Total
1PR #16	1,680
3/C#12	400
Grand Total	2,080

All Raceway Types

Sum of Qty Rcwy (ft)	
RCWY	Total
3/4" IMC	670
1"1/2" IMC	160
3" IMC	550
2" IMC	140
1 1/2"IMC	130
Grand Total	1,650

All Raceway Types Grouped by Red Designation

Sum of Qty Rcwy (ft)		
Red	RCWY	Total
N	3/4" IMC	250
	1"1/2" IMC	160
	3" IMC	550
N Total		960
Y	3/4" IMC	420
	2" IMC	140
	1 1/2"IMC	130
Y Total		690
Grand Total		1,650

Attachment 2: Continued

Item #	From Equipment	To Equipment	Cable Estimates (Exterior GB)			GB Pentr	(Interior. GB)	Shared Rcwy/Tray	Raceway Estimates				
			Length (A) (ft)	Qty (A)	Cable size/type	Conn. (Qty)	Length (B) (ft)	Length (C) (ft)	Length (D) (ft)	Qty (D)	Size/Desc. (D)	Red	Notes/Comments
1	MCC-31E	Crusher FPS-CRSH-001A	200	1	3/C#12	1	20	0	160	1	1"1/2" IMC		
2	MCC-31E	Gantry Hoist FPS-CRSH-001	200	1	3/C#12	1	20	160	0	1	1"1/2" IMC		
3	MCC-31E	Gantry Hoist FPS-CRSH-002	200	1	3/C#12	1	20	160	0	1	1"1/2" IMC		
4	1 -20VOLT, 42 CIRCUIT DIST. PANEL	MISC GLOVEBOX EQUIPMENT	180	17	3/C#12	14	20	0	140	1	3" IMC		
	ICS-CAB-030	FPS-INST-100 FEED PREP GLOVEBOX INSTR. RACK	195	35	1PR #16	0	0	0	175	1	3" IMC		
5	ICS-CAB-030	FEED PREP GLOVEBOX	245	35	1PR #16	8	20	0	205	1	3" IMC		
6	FPS-INST-100 FEED PREP GLOVEBOX INSTR. RACK	FEED PREP GLOVEBOX	70	35	1PR #16	8	20	0	30	1	3" IMC		
7	FPS-CNSL-101 ENTRY STAGING GANTRY HOIST CTRL CONSOLE	FPS-HOI-001 FEED PREP GANTRY HOIST #1	90	1	1PR #16	1	20	0	50	1	3/4" IMC		
8	FPS-CNSL-102 CRUSHER PREP GANTRY HOIST CTRL CONSOLE	FPS-HOI-002 FEED PREP GANTRY HOIST #2	90	1	1PR #16	1	20	0	50	1	3/4" IMC		
9	FPS-CNSL-103 EXIT STAGING GANTRY HOIST CTRL CONSOLE	FPS-HOI-003 FEED PREP GANTRY HOIST #3	90	7	1PR #16	1	20	0	50	1	3/4" IMC		
10	CAN PUNCTURE DEVICE SWITCH	FPS-TOOL-001 CAN PUNCTURE DEVICE	90	1	1PR #16	1	20	0	50	1	3/4" IMC		
11	OUTER AND INNER CAN CUTTER HAND SWITCH	FPS-CUTR-001 OUTER AND INNER CAN CUTTER	90	1	1PR #16	1	20	0	50	1	3/4/" IMC		
12	OUTER AND INNER CAN CUTTER HAND SWITCH	FPS-CUTR-002 OUTER AND INNER CAN CUTTER	90	1	1PR #16	1	20	0	50	1	3/4" IMC		

Attachment 2: Continued

Item #	From Equipment	To Equipment	Cable Estimates (Exterior GB)			GB Pentr	(Interior. GB)	Shared Rcwy/Tray	Raceway Estimates				
			Length (A) (ft)	Qty (A)	Cable size/type	Conn. (Qty)	Length (B) (ft)	Length (C) (ft)	Length (D) (ft)	Qty (D)	Size/Desc. (D)	Red	Notes/Comments
14	MCA-CAB-007	FPS-SCL-002	180	1	1PR #16	1	20	140	0	1	3/4" IMC	Y	WEIGH SCALE
15	MCA-CAB-007	FPS-RDR-001	160	1	1PR #16	0	0	0	140	1	3/4" IMC	Y	BAE CODE READER #1
16	MCA-CAB-007	FPS-RDR-002	160	1	1PR #16	0	0	140	0	1	3/4" IMC	Y	BAE CODE READER #2
17	MCA-CAB-007	FPS-RE/RT-001A	160	1	1PR #16	0	0	0	140	1	2" IMC	Y	CRUSHER GAMMA MONIT.
18	MCA-CAB-007	FPS-RE/RT-001B	160	1	1PR #16	0	0	140	0	1	2" IMC	Y	CRUSHER GAMMA MONIT.
19	MCA-CAB-007	FPS-RE/RT-002A	160	1	1PR #16	0	0	140	0	1	2" IMC	Y	GB GAMMA HOLDUP MONIT.
20	MCA-CAB-007	FPS-RE/RT-002B	160	1	1PR #16	0	0	140	0	1	2" IMC	Y	GB GAMMA HOLDUP MONIT.
21	MCA-CAB-007	FPS-RE/RT-002C	160	1	1PR #16	0	0	140	0	1	2" IMC	Y	GB GAMMA HOLDUP MONIT.
22	MCA-CAB-007	FPS-RE/RT-002D	160	1	1PR #16	0	0	140	0	1	2" IMC	Y	GB GAMMA HOLDUP MONIT.
23	MCA-CAB-007	FPS-RE/RT-002E	160	1	1PR #16	0	0	140	0	1	2" IMC	Y	GB GAMMA HOLDUP MONIT.
24	MCA-CAB-007	FPS-RE/RT-002F	160	1	1PR #16	0	0	140	0	1	2" IMC	Y	GB GAMMA HOLDUP MONIT.
25	MCA-CAB-007	FPS-RE/RT-002G	160	1	1PR #16	0	0	140	0	1	2" IMC	Y	GB GAMMA HOLDUP MONIT.
26	MCA-CAB-007	FPS-RE/RT-002H	160	1	1PR #16	0	0	140	0	1	2" IMC	Y	GB GAMMA HOLDUP MONIT.
27	MCA-CAB-007	FPS-RE/RT-002I	160	1	1PR #16	0	0	140	0	1	2" IMC	Y	GB GAMMA HOLDUP MONIT.
28	MCA-CAB-007	FPS-RE/RT-002J	160	1	1PR #16	0	0	140	0	1	2" IMC	Y	GB GAMMA HOLDUP MONIT.
29	MCA-CAB-007	FPS-RE/RT-002K	160	1	1PR #16	0	0	140	0	1	2" IMC	Y	GB GAMMA HOLDUP MONIT.
30	MCA-CAB-007	FPS-RE/RT-002L	160	1	1PR #16	0	0	140	0	1	2" IMC	Y	GB GAMMA HOLDUP MONIT.
31	FPS-GRIS-001A	FPS-GRIS-001	150	1	GRIS VENDOR SUPPLIED CABLE	0	0	0	130	1	1 1/2"IMC	Y	GAMMA ISOTOPIC SYSTEM
32	FPS-GRIS-002A	FPS-GRIS-002	150	1	GRIS VENDOR SUPPLIED CABLE	0	0	130	0	1	1 1/2"IMC	Y	GAMMA ISOTOPIC SYSTEM
33	FPS-GRIS-001	FPS-CHU-001	65	1	GIS VENDOR SUPPLIED CABLE	0	0	0	45	1	3/4" IMC	Y	GIS MECHANICAL COOLER
34	FPS-GRIS-002	FPS-CHU-002	65	1	GIS VENDOR SUPPLIED CABLE	0	0	0	45	1	3/4" IMC	Y	GIS MECHANICAL COOLER
					Total penetrations	41							

PLUTONIUM DISPOSITION PROJECT (U)

Project M09A

SCOPE OF WORK

M-SOW-K-00014, Revision 0
For
Milling and Mixing System (U)

Originated by: V.K. SHARMA Date: 3/23/07
Vinod K. Sharma
Process Engineer

N. Shanmuganathan Date: 3/26/2007
Nagarjan Shanmuganathan
Principal Process Engineer

Reviewed by: EC Tefft III Date: 3/26/07
Chip Tefft
Senior Mechanical Engineer

Approved by: D. P. Fisher FOR Date: 27 MAR 07
Donald Fisher
Design Authority

Approved by: John Hammond Date: 3-27-07
John Hammond
Construction Lead

Approved by: Clayton Holloway Date: 3/27/07
Clayton Holloway
Mechanical Lead

Approved by: Roderick King Date: 3/27/07
Roderick King
Electrical/I&C Lead

Approved by: Ghada S. Elchoufi Date: 3/27/07
Ghada Elchoufi
C/S/A Lead

Approved by: Drew Negus Date: 3-27-07
Drew Negus
Plant Design Lead

Approved by: B.C. Patel Date: 3/28/07
B.C. Patel
Project Engineer

UNCLASSIFIED
DOES NOT CONTAIN UNCLASSIFIED CONTROLLED NUCLEAR INFORMATION

DC/RO: EC Tefft III 3/27/07

Revision Page

Revision	Revision Date	Affected Section	Description of Change
0	03/27/07	N/A	Initial Issue

Table of Contents

Section Page

1.0 SCOPE 4
1.1 General Description 4
1.2 Background 4
2.0 ACRONYMS/ABBREVIATIONS 5
3.0 DESCRIPTION OF PHYSICAL WORK 5
3.1 Performance Category and Functional Classification (SC, SS, PS, GS) 5
3.2 Mechanical/Nuclear/Process 6
3.3 Instrumentation and Controls 7
3.4 Electrical 9
3.5 Plant Design 10
3.6 Civil/Structural/Architectural 10
4.0 ASSUMPTIONS 11
4.1 General Assumptions 11
4.2 Specific Assumptions 11
5.0 REFERENCES 12
5.1 Drawing List 12
5.2 Design Input Documents 13
5.3 Applicable SRS & Industry Codes, Guides and Standards 13
5.4 Related Scopes of Work (SOW) 14
5.5 Miscellaneous 14
6.0 ATTACHMENTS 15
Attachment 1, Bulk Material - Piping and Valves 16
Attachment 2, Bulk Material - C/S/A 17
Attachment 3, Bulk Material - Electrical Cable and Conduit 18

1.0 SCOPE

1.1 General Description

This Scope of Work (SOW) covers the Milling and Mixing System (MIX) for the Plutonium Disposition Project (M09A).

Plutonium oxide feed is received in a batch can (~2 kg PuO) into the Milling/Mix glove box from the Feed Preparation glove box. The entire content of the batch can is added into the attritor using an engineered dustless transfer technique.

Based on the net mass of the plutonium oxide added, an appropriate amount (~ 18 kg) of LaBS frit is added to meet the required ratio of Pu oxide to glass frit (approximately 1:9).

The attritor is best described as a stirred ball mill. The stationary tank filled with grinding media and the feed (puO2 + frit) to be milled and mixed are agitated at a high speed by a rotating shaft with arms. The rotating shaft stirs the contents at high speed causing impact forces and resulting in size reduction and intimate mixing.

Once the LaBS frit/Pu feed mixture is mixed and milled, the resultant homogeneous powder is discharged by opening a valve at the bottom of the attritor. The powder is discharged into a divider vessel for splitting the content into 2 batches of 10 kg each and dispensed into transport hoppers to be sent for Vitrification.

1.2 Background

The Office of Environmental Management has approximately 13 metric tons (MT) of plutonium in approximately 21 MT bulk materials without any defined disposition path. The Plutonium Disposition (PUD) Project is critical to meet the Department of Energy's strategic goal of providing a responsible resolution to the permanent disposal of the nation's excess high-level radioactive materials and waste; and to enable the cleanup of Environmental Management sites.

The Plutonium Disposition Facility (PDF) will be located at the K-Area Complex (KAC) to disposition up to approximately 13 Metric Tons (MT) of Environmental Management (EM) owned surplus plutonium. The facility will utilize a vitrification process to vitrify plutonium into a lanthanide borosilicate (LaBS) glass matrix. This glass will be packaged into bagless transfer cans and placed inside a Defense Waste Processing Facility (DWPF) type canister. The canister will be transported to DWPF and filled with High Level Waste (HLW) glass. The DWPF canisters will be stored in the Glass Waste Storage Buildings and later transported to the geologic repository at Yucca Mountain.

This Scope of Work (SOW) has been developed for the purpose of facilitating **construction** cost and schedule estimates for the Conceptual Design Report (CDR) on the PUD project. The input to this SOW was the approved technical baseline consisting of a Facility Design Description (FDD) and associated System Design Descriptions (SDD). Every intent has been made to assure alignment and consistency between this SOW and the appropriate sections of the technical baseline, in order to provide accurate estimates. This SOW is not a PUD technical baseline document. A more detailed description of the system can be found in the associated SDD listed in the reference section.

A **HOLD** is placed to identify information that is preliminary in nature, results from a design uncertainty, originates from insufficient documentation, needs verification, or identifies a discrepancy. A **TBD** is placed to identify places in the text where numeric values or

descriptive information is not available at the time that the current revision of the SOW is released.

2.0 ACRONYMS/ABBREVIATIONS

CDR	Conceptual Design Report
DS	Design Services
DWPF	Defense Waste Processing Facility
FDD	Facility Design Description
HEPA	High-Efficiency Particulate Air (filter)
HLW	High Level Waste
HVAC	Heating, Ventilation and Air Conditioning
KAC	K-Area Complex
LaBS	Lanthanide Borosilicate
LLW	Low Level Waste
MC&A	Material Control and Accountability
MT	Metric Ton
MIX	Milling and Mixing System
NMC	Neutron Multiplicity Counter
MPC&A	Material Protection Control and Accountability
NFPA	National Fire Protection Association
PC	Performance Category
PC&S	Process and Control Services Department
PDF	Plutonium Disposition Facility
PDI	Pressure Differential Indicator
PIDAS	Perimeter Intrusion Detection and Assessment System
PU	Plutonium
PUD	Plutonium Disposition
PuVit	Plutonium Vitrification
SC	Safety Class
SDD	System Design Description
SOW	Scope Of Work
SRS	Savannah River Site
S&S	Safeguards & Security
SS	Safety Significant
TBD	To Be Determined
UCNI	Unclassified Controlled Nuclear Information
UNO	Unless Noted Otherwise
WBS	Work Breakdown Structure
WSRC	Washington Savannah River Company

3.0 DESCRIPTION OF PHYSICAL WORK

3.1 Performance Category and Functional Classification (SC, SS, PS, GS)

3.1.1 Performance Category

3.1.1.1 The performance category of the Milling and Mixing System is PC-1. (Ref. X-SYD-K-00005)

3.1.2 Functional Classification

3.1.2.1 The systems in this SOW shall be designed in accordance with the requirements of WSRC Manual WSRC-E7, Conduct of Engineering and Technical Support Procedure 2.25 Rev 14, “Functional Classification”, (Ref. X-SYD-K-00005) as follows:

A. HSA-10 attritor with Variable Frequency Drive, 20 HP motor

Functional Classification – Production Support (PS)

B. One (1) Dustless frit feed hopper with Frit feed tube w/air lock

Functional Classification - Production Support (PS)

C. Scales –Total 4 (1 for frit hopper, 1 for Day hopper, 2 for Divider Vessels)

Functional Classification - Production Support (PS)

D. Dustless Day hopper with valves

Functional Classification - Production Support (PS)

E. Hoist above rails

Functional Classification - Production Support (PS)

F. Divider Vessels with valves

Functional Classification - Production Support (PS)

G. Cameras, Barcode reader, Liquid detection, transport system, holdup detector, divider etc.

Functional Classification - Production Support (PS)

H. Glovebox with associated HEPA filter housing

Functional Classification – Safety Significant (SS, PC-3)

3.2 Mechanical/Nuclear/Process

Refer to M-M8-K-00006 Rev. A for the Milling and Mixing Block Flow Diagram, and M-M8 K-00013 Rev. A for Material Handling Block Flow Diagram.

3.2.1 Milling and Mixing Glovebox Components

3.2.1.1 The following components will be contained within a glovebox. The major components are:

A. Two (2) Attritors No. MIX-MILL-001 and 002, Model HAS-10, Variable Frequency Drive 20 HP Motor, Refer to Data Sheet No. M-DS-K-00076

B. Two (2) Divider Vessels No. MIX-VSL-001 and 002, with screw feeder, Each 0.75 Cu. Ft. stainless steel, Refer to Data Sheet No. M-DS-K-00160. (Includes Scales MIX-SCL-004 and MIX-SCL-005)

C. Two (2) Overhead Hoists No.MIX-CRN-001 and 002, mechanical chain hoist capable of handling 1000 Lbs for vertical 8' lift and Turn-tables No. MIX-TUTB-001and 002 with tilting mechanism.

D. Two (2) Dustless Batch Can Dumping Stations No. MIX-STAT-001 and 002.

3.2.2 Glovebox

3.2.2.1 Refer to M-SPP-K-00059 Rev. B for the general glovebox details. Drawing SK-DE-MIX-0001 Rev. B shows the glovebox and its layout. The present glovebox arrangement allows access to only one side.

The glovebox is ventilated with room air which is drawn through inlet HEPA filters and exhausted through additional HEPA filters to the Glovebox Exhaust System. See drawing M-M6-K-02269 for glovebox ventilation piping and instrumentation diagram. Glovebox ventilation to include the following accessories:

A. HEPA filter in stainless steel housing. (2 ea.)

B. Non-testable HEPA filter mounted to skin of glovebox. (1 ea.).

C. 8" automatic damper, pneumatically operated (1 ea.)

D. 4" isolation dampers (5 ea.)

E. 4" balancing damper (2 ea.)

F. ¼" three-way ball valves, stainless (7 ea.)

G. 8" Balancing Damper (1 ea.)

3.2.3 Frit Hopper

3.2.3.1 One (1) 40 Cu. Ft. stainless steel hopper No.MIX-HPR-001 with bottom opening and a variable speed rotary or screw feeder. Refer to Data Sheet No.M-DS-K-00158. (Includes Scale MIX-SCL-001)

3.2.4 Day Hopper

3.2.4.1 One(1) 4 Cu. Ft. stainless steel hopper No.MIX-HPR-002 with bottom opening with a variable speed rotary or screw feeder. Refer to Data Sheet No.M-DS-K-00159. (Includes Scale MIX-SCL-003)

3.2.5 Piping

3.2.5.1 Piping material is designated by a "P-Spec" designation from SRS Document WSRC-IM-95-58. The piping material will be welded or utilize flange fittings.

3.3 **Instrumentation and Controls**

The Milling and Mixing System defined in block flow diagrams M-M8-K-00006 and M-M8-K-00013 consists of two attritors and supporting equipment. Controls are defined in the Milling and Mixing Control Block Diagram J-J8-K-00028 and Logic J-J2-K-01554. For Cable and raceway estimated bulk quantities refer to Attachment 3. Instrument Cabinet MIX-INST-100 will be used to house transmitters associated with the following equipment:

3.3.1 The following controls equipment is associated with <u>each</u> of the two attritors:

3.3.1.1 Attritors MIX-MILL-001 and MIX-MILL-002 as defined in Data Sheet M-DS-K-00076 involve the following control interfaces:

A. (1) each VFD motor for driving the Attritors
B. (1) each Intake Valve with actuator and 2 limit switches
C. (1) each Discharge Valve with actuator and 2 limit switches
D. (1) each Vibrator

3.3.1.2 Divider Vessel as defined in data sheet M-DS-K-00160 involves the following control interfaces:

A. (1) each Vibrator
B. (1) each Screw Feeder Discharge
C. (1) Scale (MIX-SCL-004 and MIX-SCL-005)

3.3.2 For Milling and Mixing Glovebox Feed Through Penentration Connectors totals see Section 3.4. The Milling and Mixing Glovebox will contain the following:

3.3.2.1 Cooling Water System - see Chill Water Scope of Work No. M-SOW-K-00022 and Milling and Mixing and Oxidation Heat Exchanger P&ID M-M6-K-02291. The system and equipment are not part of the Milling and Mixing Scope of Work.

3.3.2.2 Glovebox Dry Air as defined in P&ID M-M6-K-02269 includes the following controls:

A. Total (1) Pressure Differential Indicator (PDI)
B. Total (1) Thermocouple

3.3.2.3 Glovebox Airlock as defined in P&ID M-M6-K-02269 includes the following controls:

A. Total (2) Actuators
B. Total (4) Limit Switches

3.3.2.4 Glovebox Exhaust as defined in P&ID M-M6-K-02269 includes the following controls:

A. Total (2) PDI across Filter
B. Total (1) Flow Element
C. Total (1) Pressure Element and Transmitter

3.3.2.5 Glovebox Ventilation as defined in P&ID M-M6-K-02269 includes the following controls:

A. Total (1) Pressure Differential Alarm Switch

3.3.2.6 Glovebox Maintenance Exhaust Air Flow Valve as defined in P&ID M-M6-K-02269 includes the following controls:

A. Total (1) Pressure Element and Transmitter
B. (1) Valve

3.3.2.7 Frit Hopper MIX-HPR-001 as defined in M-DS-K-00158 includes the following control interfaces:

A. (1) each Scale MIX-SCL-001 for Loss in weight/Gain in weight

B. (1) each Screw Feeder

3.3.2.8 Day Hopper MIX-HPR-002 as defined in Data Sheet M-DS-K-00159 includes the following control interfaces:

A. (1) each Screw Feeder
B. (1) each Diverter Valve Actuator
C. (2) each Diverter Valve Limit Switches
D. (1) each Scale Mix-SCL-003 for Loss in weight/Gain in weight

3.3.3 Instrument Cabinet MIX-INST-100 will house transmitters required by the above equipment.

3.3.4 The installation of the ICS I.O. cabinet ICS-CAB-040 to be located in the -20' Melter I/O Support Room and the OCS workstation ICS-OWS-013 to be located in the Milling and Mixing / Vitrification Control Room are included in the ICS Scope of Work no. J-SOW-K-00002 and defined in the Control Automation Plan J-PMP-K-00001 and the ICS Network Block Diagram J-J8-K-00050. These items are required for system operation, but are not included within the Milling and Mixing Scope of Work.

3.3.5 MC&A Equipment (reference Control Block Diagram J-J8-K-00016)

3.3.5.1 Scales (1 each)

1. The Hopper weigh scale MIX-SCL-002 (Data Sheet J-JD-K-00146) weighs the transport hopper leaving milling and mixing for vitrification and also weigh empty returning transport.

3.3.5.2 Barcode readers (4 each)

1. Details of the barcode readers are in Data Sheet J-JD-K-00115. The barcode reader tracks Batch Cans from feed prep going to Attritor Mills 1 and 2 and the Vessel 1 and 2 Barcode readers track the batch cans leaving the attritors.

3.3.5.3 Gamma Holdup Monitors (8 each)

1. Details of the gamma holdup monitors for measuring gamma holdup for MC&A are in Data Sheet J-JD-K-00116. Each attritor has two gamma holdup monitors and the glovebox has four for a total of 8 Gamma monitors.

3.3.5.4 Neutron Monitors (2 each)

1. Details of the neutron holdup monitors for measuring neutron activity for MC&A are in Data Sheet J-JD-K-00145. The neutron monitor is used to measure neutron activity in the transport hoppers after the Frit is added.

3.3.5.5 Gamma Isotopic System (1 each)

1. Details of the gamma isotopic system used for plutonium isotopic ratio analysis for MC&A are in Data Sheet J-JD-K-00069. There is one gamma isotopic system in the exit area of the glovebox.

3.4 **Electrical**

3.4.1 The Milling & Mixing System will contain the following major electrical components and services. The major electrical components will be provided as Engineered Equipment. This Scope of Work includes all raceway, power, control cables/terminations between field equipment and local controls. Provide onsite setup and assembly of the referenced Engineered Equipment. Approximately 48 Glovebox Feed-thru Penetrations Connector Assemblies are required for service to electrical and I&C components/equipment located within glovebox.

3.4.1.1 Electrical power distribution will be as shown on single line drawings E-E2-K-02229 and E-E2-K-02230.

3.4.1.2 The Milling & Mixing Viewing System, has following electrical equipment, refer to Block Diagram E-EB-K-00705 and Data Sheet # E-DS-K-00021.

A. 1 each – Inlet View Camera for Attritor # 1, MIX-PCTV-001A

B. 1 each – Outlet View Camera for Attritor # 1, MIX-PCTV-001B

C. 1 each – Inlet View Camera for Attritor # 2, MIX-PCTV-002A

D. 1 each – Outlet View Camera for Attritor # 2, MIX-PCTV-002B

3.4.1.3 Work Scope includes installation of new grounding pigtails (approx. 10 ft. long with bolted connections) between new permanent electrical equipment and/or skids to the existing ground grid system. Small movable equipment will be grounded in accordance with code and or industry practices.

3.4.1.4 Provide and install Junction boxes, pull boxes, cables, conduits. Refer to Attachment 3 for Bulk Material Takeoff for cable and conduit descriptions and quantities.

3.5 **Plant Design**

3.5.1 Piping quantities have been estimated in Attachment 1.

3.6 **Civil/Structural/Architectural**

3.6.1 Refer to C-SOW-K-00009.

3.6.1.1 Milling and Mixing Glovebox. Ref. SK-DE-MIX-0001, 0002

The Glovebox is 15’x5’x9’ high, has WEP and lead shielding, and weighs about 15000 Lbs.which includes Attritors, pumps, Divider vessels, Heat Exchangers, Cooling Jackets, Hoists etc. The bottom frame of the Glovebox will be bolted to 6 each12” x12” x ¾” thick base plates. Each base plate will be anchored with ¾” diameter A-36 Maxi bolts to the concrete floor -40 Level. Alternatively, Hilti Kwik Bolt-TZ are acceptable for anchoring items.

3.6.1.2 Dustless Frit & Day hoppers unit. Ref. SK-DE-MIX-0001, 0002

The size of the frame will be approximately 4’x 4’x10’ high for supporting hoppers which weigh about 7000 lbs. The frame will be made of 4 each of TS 6 x6 x 0.375 columns, beams on top & bottom and diagonally braced by L 3 X 3 X 3/8 galvanized carbon steel on all four sides. Each column will be supported on and welded to 12” x12” x ¾” thick base plates. Each base plate will be anchored with ¾” diameter A-36 Maxi bolts to the concrete floor -20 Level. Alternatively, Hilti Kwik Bolt-TZ are acceptable for anchoring items.

3.6.1.3 See Attachment 2, for Bulk Material List for C/S/A.

4.0 ASSUMPTIONS

4.1 General Assumptions

4.1.1 The Construction Agency will be the SRS Construction Group. Design Services will provide engineering documentation for the installation of this equipment and will rely on the use of SRS Guides and Standards. Glovebox shell will be designed and fabricated by a vendor.

4.1.2 SRS Construction Group will procure all bulk materials.

4.1.3 SRS Construction Group will procure all off-the-shelf components and equipment identified on engineering data sheets that do not require testing or quality documentation.

4.2 Specific Assumptions

4.2.1 Mechanical

4.2.1.1 All vessels with an ID 6” or greater shall be per ASME B&PVC Section VIII, Division 1 code stamped or an approved waiver. An appropriate SRS verification record will be competed for each vessel and pressure protection device (disk or valve).

4.2.1.2 All piping will be per ASME B31.3.

4.2.2 Instrumentation and Controls

4.2.2.1 No specific assumptions have been made in this group.

4.2.3 Electrical

4.2.3.1 Assume that all permanently installed cabling will be routed in protected conduit/tray.

4.2.3.2 Cables installed within Gloveboxes will be routed within designated tray located within GB and/or supported from structural members within GB utilizing cable tie wraps.

4.2.3.3 Existing grounding grid is intact and adequate for grounding of new equipment.

4.2.3.4 Pull/junction boxes will be required at 100 ft. run minimum intervals. Assume box size to be 18” X18” X 6”.

4.2.4 Plant Design

4.2.4.1 No specific assumptions have been made in this group. Refer to Attachment 1 for the estimated piping quantities within the glovebox.

4.2.5 Civil/Structural/Architectural

4.2.5.1 The size of the Dustless Frit & Day hoppers unit [Ref. SK-DE-MIX-0001, 0002], is assumed to be maximum 3.5’ diameter and 10’ high, with the lugs already attached to the hoppers for supporting in the structural frame.

4.2.5.2 Core drills for routing commodities through walls or floors will be covered in C-SOW-K-00009.

4.2.5.3 Functional Classification for drilling holes in concrete surface is SC.

4.2.5.4 The material for all the base plates and structural steel components shall be Galvanized Carbon Steel.

5.0 REFERENCES

5.1 Drawing List

5.1.1 PUD Project Drawings & Sketches

5.1.1.1 SK-DE-MIX-0001, Rev. B, - Glovebox Layout

5.1.1.2 SK-DE-MIX-0002, Rev. B, - Facility Layout

5.1.1.3 SK-DE-MIX-0003, Rev. A, - Partial Floor Plan @ Elev. -40’

5.1.1.4 M-DS-K-00076, Rev. B, - Attritor Datasheet

5.1.1.5 M-DS-K-00150, Rev. B, - Milling and Mixing/Oxidation Cooling Heat Exchanger

5.1.1.6 M-DS-K-00151, Rev. B, - Milling and Mixing/Oxidation Cooling Water Pump

5.1.1.7 M-DS-K-00158, Rev. A, - Frit Hopper Datasheet

5.1.1.8 M-DS-K-00159, Rev. A, - Day Hopper Datasheet

5.1.1.9 M-DS-K-00160, Rev. A, - Divider Vessel Datasheet

5.1.1.10 M-M5-K-01946, Rev. B, - Milling and Mixing system Glovebox Ventilation Diagram

5.1.1.11 M-M5-K-01962, Rev. B, - Cooling Water Pump and Heat Exchanger Flow Diagram

5.1.1.12 M-M6-K-02269, Rev. B, - Milling and Mixing system Glovebox Ventilation P&ID

5.1.1.13 M-M6-K-02291, Rev. A, - Milling and Mixing/Oxidation Heat Exchanger P&ID

5.1.1.14 M-M8-K-00006, Rev. A, - Milling/Mixing

5.1.1.15 M-M8-K-00013, Rev. A, - Milling and System Material Handling Block Flow Diagram

5.1.1.16 M-M8-K-00001, Rev. A, Plutonium Disposition Facility, Level 1

5.1.1.17 M-SPP-K-00059, Rev. B, Plutonium Disposition Gloveboxes

5.1.1.18 P-PG-K-02142, Rev. B, Plutonium Disposition Project General Arrangement Plan at Level -20

5.1.1.19 P-PG-K-02143, Rev. B, Plutonium Disposition Project General Arrangement Plan at Level -40

5.1.1.20 E-DS-K-00021, Rev. A, Milling & Mixing and Vitrification area Viewing Camera System.

5.1.1.21 E-E2-K-02229, Rev. D, Milling/Mixing and Vitrification Motor Control Center - ELNH-MCC-24M Single Line Diagram

5.1.1.22 E-E2-K-02230, Rev. D, Milling/Mixing and Vitrification Motor Control Center - ELNH-MCC-31M Single Line Diagram

5.1.1.23 E-EB-K-00705, Rev. C, Vitrification Viewing System, Block Flow Diagram

5.1.1.24 J-J8-K-00016 Milling/Mixing MC&A Control Block Diagram

5.1.1.25 J-J8-K-00028 Milling/Mixing System Control Block Diagram

5.1.1.26 J-JD-K-00114 Milling and Mixing Gamma Holdup Monitors

5.1.1.27 J-JD-K-00115 Milling and Mixing Barcode Readers

5.1.1.28 J-JD-K-00116 Milling and Mixing Gamma Isotopic System (U)

5.1.1.29 J-JD-K-00117 Milling and Mixing Batch Can Weigh Scale

5.1.1.30 J-JD-K-00146 Milling and Mixing Melter Hopper Weigh Scale

5.2 Design Input Documents

The following Facility Design Description and System Design Descriptions are the baseline documents used to develop this SOW.

5.2.1 Facility Design Description

5.2.1.1 G-FDD-K-00001, Rev B “PUV Facility Design Description”

5.2.2 System Design Description

5.2.2.1 X-SYD-K-00005 Rev. C “Milling and Mixing SDD”

5.3 Applicable SRS & Industry Codes, Guides and Standards

5.3.1 Industry Codes and Standards

5.3.1.1 ASME B31.3, 2006 - Chemical Plant and Petroleum Refinery Piping

5.3.1.2 ASME Boiler and Pressure Vessel Code, Sect. VIII, Div. 1, 2006

5.3.1.3 NFPA 70, 2005 – National Electrical Code

See Functional Design Description and System Design Descriptions References 2.2.1.1, 2.2.2.1, 2.2.2.2, and 2.2.2.3 for more codes and standards.

5.3.2 SRS Guides & Standards

5.3.2.1 SRSESM 15980-03-R, Mechanical Installation of General and Nuclear Services Instrumentation

5.3.2.2 WSRC-TM-95-1, Standard no. 15980, Rev. 6, “Mechanical Installation of Safety Class and Safety Significant Instrumentation”

5.3.2.3 WSRC-IM-95-58, Guide no. 15060-G, Rev.5, “Application of ASME B31.3”

5.3.2.4 WSRC-IM-95-58, Guide no. 15980-G, Rev.3, “Installation and Calibration of Instruments”

5.3.2.5 WSRC-IM-95-58, Guide no. 16051-G, Rev.2, “Installation of Electrical Raceway Systems and Cable Trays”

5.3.2.6 WSRC-IM-95-58, Guide no. 16052-G, Rev.3, “Installation of Electrical Wires, Cables and Terminations”

5.3.2.7 WSRC-IM-95-58, Guide no. 16053-G, Rev.2, “Installation of Electrical Equipment”

5.3.2.8 WSRC-IM-95-58, Guide no. 16056-G, Rev.2, “Installation of Grounding Systems”

5.3.2.9 WSRC-TM-95-1, Standard 03010, Rev: 1, Coring, Chipping, and Drilling in Concrete.

5.3.2.10 WSRC-TM-95-1, Standard 05057, Rev: 1, Control of Welding.

5.3.2.11 WSRC-IM-95-58, Guide 03251-G, Rev: 1, Concrete Anchors.

5.3.2.12 WSRC-IM-95-58, Guide 03252-G, Rev: 1, Installation and Testing of Concrete Anchors.

5.4 Related Scopes of Work (SOW)

5.4.1 C-SOW-K-00009, Rev. 0, Scope of Work for Structural and Architectural Modifications for Process Building.

5.4.2 E-SOW-K-00017, Rev. 0, Electrical General Scope of Work

5.4.3 J-SOW-K-00002, Rev. 0, Scope of work for ICS & MC&A Network.

5.4.4 M-SOW-K-00020, Rev. 0, Scope of Work for HVAC System.

5.4.5 M-SOW-K-00021, Rev. 0, Scope of Work for Balance of Plant Air and Gas Systems.

5.4.6 M-SOW-K-00022, Rev. 0, Scope of Work for Balance of Plant Water Systems.

5.4.7 M-SOW-K-00011, Rev. 0, Scope of Work for Vitrification

5.4.8 S-SOW-K-00002, Rev.0, Scope of Work for Safeguards and Security System.

5.5 Miscellaneous

5.5.1 Inter-Office Memo dated May 23, 2006 from Fisher to Rensch regarding PUDA13000, Detailed Layout Flow Studies, Milling & Mixing.

5.5.2 C-CI-G-0039, Rev: 0, Cookbook for Electrical Conduit and Equipment Supports, February 9, 2005.

5.5.3 C-CH-G-00004, Rev. 0, Cookbook for Routing & Supports for NPS 2 and Smaller Piping.

6.0 ATTACHMENTS

6.1 Attachment 1, Bulk Material List for Piping and Valves for Milling and Mixing System

6.2 Attachment 2, Bulk Material List for C/S/A for Milling and Mixing System

6.3 Attachment 3, Milling and Mixing Bulk Materials, Cable and Conduit

Attachment 1,
Bulk Material - Piping and Valves

System	Process Material	Diameter (inches)	Total Quantity (Feet)
Mixing & Milling	Process Chilled Water	2”	30’
Mixing & Milling	Glovebox Exhaust air	4”	50’

Attachment 2,
Bulk Material - C/S/A

Sr. No.	Description of Item	Size	Quantity	Remarks
1	Base Plates	12” X 12” X ¾” Thick	10 Nos.	
2	Tube Steel	TS 6 X 6 X 0.375	72 Ft.	Cut to Suit.
3	Anchor Bolts	¾” Diameter	40 Nos.	
4	Structural Steel L	L 3 X 3 X 3/8	96 Ft.	Cut to Suit.

Note: Table above includes the bulk material for installing/supporting major equipment.

Attachment 3,
Bulk Material - Electrical Cable and Conduit

Description: Milling and Mixing Bulk Materials, Cable and Conduit
Reference: E-E2-K-02229 (MCC-24M), E-E2-K-02230 (MCC-31M), E-EB-K-00705, J-J8-K-00016, E-EB-K-00028

All Conduits are IMC (Intermediate Metallic Conduit) type.

				Cable Estimates (Exterior GB)		GB Pentr	(Interior. GB)	Shared Rcwy/Tray	Raceway Estimates				
Item #	**From Equipment**	**To Equipment**	**XGB Length (A) (ft)**	**Qty (A)**	**Cable size/type**	**Conn. (Qty)**	**NGB Length (B) (ft)**	**Length (C) (ft)**	**Length (D) (ft)**	**Qty (D)**	**Size/Desc. (D)**	**Red**	**Notes/Comments**
1	ELNH-MCC-24M	Variable Frequency Drive MIX-VFD-001	65	1	3/c# 4 w/1-# 10 gnd			35	10	1	1-1/2" IMC	N	Ref:E-E2-K-02229 (Shared Tray)
2	Variable Frequency Drive MIX-VFD-001	Attritor MIX-MILL-001 (via Disconnect Sw)	210	1	3/c# 4 w/1-# 10 gnd			170	20	1	1-1/2" IMC	N	Ref:E-E2-K-02229 (Shared Tray)
3	ELNH-MCC-31M	Variable Frequency Drive MIX-VFD-002	65	1	3/c# 4 w/1-# 10 gnd			35	10	1	1-1/2" IMC	N	Ref:E-E2-K-02230 (Shared Tray)
4	Variable Frequency Drive MIX-VFD-002	Attritor MIX-MILL-002 (via Disconnect Sw)	210	1	3/c# 4 w/1-# 10 gnd			170	20	1	1-1/2" IMC	N	Ref:E-E2-K-02230 (Shared Tray)
5	120/208 V Power Panel ELLV-PNL-010	Frit Charge Weigh Scale	110	1	3/c# 12				90	1	3/4" IMC	N	Ref:E-E2-K-02230 J-J8-K-00016
6	120/208 V Power Panel ELLV-PNL-010	Gamma Iso electronick Rack #1 MIX-GRIS-001A	120	1	3/c# 12				100	1	3/4" IMC	N	Ref:E-E2-K-02230 J-J8-K-00016
7	120/208 V Power Panel ELLV-PNL-010	Gamma Isotopic System #1 MIX-GRIS-001	205	1	3/c# 12				185	1	3/4" IMC	N	Ref:E-E2-K-02230 J-J8-K-00016
8	120/208 V Power Panel ELLV-PNL-010	Attritor # 1 & 2 (Hold Up) Mon. Mix RE/RT 001A, 001B, 002A, 002B	120	1	3/c# 12				100	1	2" IMC	N	Ref:E-E2-K-02230 J-J8-K-00016
9	120/208 V Power Panel ELLV-PNL-010	Can Turn TableCab Gamma (Hold up) Mon. MIX-RE/RT-003A, 003B, 003C, 003D	120	1	3/c# 12			100				N	Ref:E-E2-K-02230 J-J8-K-00016 (Shared Conduit)
10	120/208 V Power Panel ELLV-PNL-010	Batch CAN/VSL Barcode RDR MIX-RDR-001A, 002A, 001B, 002B	120	1	3/c# 12			100				N	Ref:E-E2-K-02230 J-J8-K-00016 (Shared Conduit)

11	120/208 V Power Panel ELLV-PNL-010	Batch CAN/HOPPER Weigh Scale #1 MIX-SCL-001 & 002	120	1	3/c# 12			100				N	Ref:E-E2-K-02230 J-J8-K-00016 (Shared Conduit)
12	120/208 V Power Panel ELLV-PNL-010	Hopper # 1 Neutron Mon. MIX-RE/RT-004	120	1	3/c# 12			100				N	Ref:E-E2-K-02230 J-J8-K-00016 (Shared Conduit)
13	120/208 V Power Panel ELLV-PNL-010	Hopper # 2 Neutron Mon. MIX-RE/RT-005	120	1	3/c# 12			100				N	Ref:E-E2-K-02230 J-J8-K-00016 (Shared Conduit)
14	120/208 V Power Panel ELLV-PNL-010	Day Hopper feeder Motor MIX-HPR-002	120	1	3/c# 12			100				N	Ref:E-E2-K-02230 J-J8-K-00016 (Shared Conduit)
15	120/208 V Power Panel ELLV-PNL-010	Divider Vessel 1 Motor MIX-VSL-001	130	1	3/c# 12	1	10		100	1	1" IMC	N	Ref:E-E2-K-02230
16	120/208 V Power Panel ELLV-PNL-010	Divider Vessel 2 Motor MIX-VSL-002	130	1	3/c# 12	1	10	100				N	Ref:E-E2-K-02230 (Shared Conduit)
17	Video Equip Rack VIT-VER-001	Attritor 1 Inlet View Camera MIX-PCTV-001A	180	1	Vendor Cable RG6 + 6/C # 16 Control Cable	1	10		150	1	2" IMC	N	Ref: E-EB-K-00705 Vendor cable size is assumed.
18	Video Equip Rack VIT-VER-001	Attritor 1 Outlet View Camera MIX-PCTV-001B	180	1	Vendor Cable RG6 + 6/C # 16 Control Cable	1	10	150				N	Ref: E-EB-K-00705 Vendor cable size is assumed (Shared Conduit)
19	Video Equip Rack VIT-VER-001	Attritor 2 Inlet View Camera MIX-PCTV-002A	180	1	Vendor Cable RG6 + 6/C # 16 Control Cable	1	10	150				N	Ref: E-EB-K-00705 Vendor cable size is assumed (Shared Conduit)
20	Video Equip Rack VIT-VER-001	Attritor 2 Outlet View Camera MIX-PCTV-002B	180	1	Vendor Cable RG6 + 6/C # 16 Control Cable	1	10	150				N	Ref: E-EB-K-00705 Vendor cable size is assumed (Shared Conduit)
21	M C & A CABINET MCA-CAB-001	GAMMA ISO Electronic RK # 1 MIX-GRIS-001A	100	1	Cat 5E (4 PR#24)				80	1	3/4" IMC	Y	Ref: J-J8-K-00016

22	M C & A CABINET MCA-CAB-001	Batch Can/Hopper Weigh Scales MIX-SCL-001 & MIX-SCL-002	180	2	Cat 5E (4 PR#24)	2	10		150	1	2" IMC	Y	Ref: J-J8-K-00016
23	M C & A CABINET MCA-CAB-001	Batch Can Bar Code Readers & Vessel Bar Code Readers MIX-RD-001A, 002A, 001B, 002B	185	4	Cat 5E (4 PR#24)			150	15	1	1" IMC	Y	Ref: J-J8-K-00016 (Shared Conduit)
24	GAMMA ISO Electronic RK # 1 MIX-GRIS-001A	GAMMA Isotopic System # 1 MIX-GRIS-001	140	1	Vendor Cable 12/C Cable w/connectors at both ends				120	1	1-1/2" IMC	Y	Ref: J-J8-K-00016 Vendor cable size is assumed
25	M C & A CABINET MCA-CAB-001	Neutron & Hold Up Monitors (10)	180	10	Vendor Cable USB Cable				160	1	1" IMC	Y	Ref: J-J8-K-00016
26	M & M GB INSTRUMNET RACK MIX-INST-100	M & M Attritor 1 MIX-MILL-001 I/O & M & M Attritor 2 MIX-MILL-002 I/O (section 2 GB)	100	50	1PR # 16 SH	10	10		70	1	3" IMC	N	Ref: J-J8-K-00028
27	M & M GB INSTRUMNET RACK MIX-INST-100	MILLIN & MIXING GB (section 3)	100	50	1PR # 16 SH	10	10		70	1	3" IMC	N	Ref: J-J8-K-00028
28	M & M Attritor I/O cabinet ICS-CAB-040	M & M Attritor 1 MIX-MILL-001 I/O & M & M Attritor 2 MIX-MILL-002 I/O (section 2 GB)	160	50	1PR # 16 SH	10	10		130	1	3" IMC	N	Ref: J-J8-K-00028
29	M & M Attritor I/O cabinet ICS-CAB-040	MILLIN & MIXING GB (section 3)	160	50	1PR # 16 SH	10	10		130	1	3" IMC	N	Ref: J-J8-K-00028
30	M & M Attritor I/O cabinet ICS-CAB-040	M & M GB INSTRUMNET RACK MIX-INST-100	180	2	50 - PR # 16 SH				160	2	3" IMC	N	Ref: J-J8-K-00028
31	Equipment	Ground Grid	500	1	2/0 Gnd							N	Grounding

Scope Set: **Milling and Mixing System** **Date:** **3/20/2007**

Prepared By: **G.S. Rao** **Reviewed By:** **Roderick King**

Exterior Glovebox Cables

Sum of Qty XGB (ft)	
Ext. Cable Size/Type	Total
Vendor Cable	
RG6 + 6/C # 16 Control Cable	540
50 - PR # 16 SH	360
Vendor Cable	
USB Cable	1,800
3/c# 4 w/1-# 10 gnd	550
2/0 Gnd	500
Cat 5E (4 PR#24)	1,200
1PR # 16 SH	26,000
Vendor Cable	
12/C Cable w/connectors at both ends	140
3/c# 12	1,535
Grand Total	**32,625**

Interior Glovebox Cables

Sum of Qty NGB (ft)	
GB Cable Size/Type	Total
Vendor Cable	
RG6 + 6/C # 16 Control Cable	40
Cat 5E (4 PR#24)	30
1PR # 16 SH	2000
3/c# 12	20
Grand Total	**2090**

All Raceway Types

Sum of Qty Rcwy (ft)	
RCWY	Total
1-1/2" IMC	180
3/4" IMC	455
2" IMC	400
1" IMC	275
3" IMC	720
Grand Total	**2030**

All Raceway Types Grouped by Red Designation

Sum of Qty Rcwy (ft)		
Red	RCWY	Total
N	1-1/2" IMC	60
	3/4" IMC	375
	2" IMC	250
	1" IMC	100
	3" IMC	720
Y	1-1/2" IMC	120
	3/4" IMC	80
	2" IMC	150
	1" IMC	175
Grand Total		**2,030**

NOTE: Red designated raceways are associated with (classified) protected transmission system. Installation and (independent) inspection of these components and their associated wiring shall be per Project Security Plan Requirements.

PLUTONIUM DISPOSITION PROJECT (U)

Project M09A

SCOPE OF WORK

M-SOW-K-00015 Revision 0
For
Bagless Transfer System (U)

Originated by:	N. Shanmuganathan Nagarajan Shanmuganathan Principal Process Engineer	Date: 4/11/2007
Reviewed by:	Marc Cameron Marc Cameron Mechanical Engineer	Date: 4/11/07
Approved by:	Kraig Oldfield Design Authority Lead	Date: 4/11/07
Approved by:	Clayton Holloway Clayton Holloway Mechanical Lead	Date: 4/25/07
Approved by:	Roderick King Roderick King Electrical/I&C Lead	Date: 4/25/07
Approved by:	Ghada S. Elchoufi Ghada Elchoufi C/S/A Lead	Date: 4/25/07
Approved by:	John Hammond John Hammond Construction Lead	Date: 4-25-07
Approved by:	Drew Negus Drew Negus Plant Design Lead	Date: 4-25-07
Approved by:	B.C. Patel B.C. Patel Project Engineer	Date: 4/25/07

UNCLASSIFIED
DOES NOT CONTAIN UNCLASSIFIED CONTROLLED NUCLEAR INFORMATION

DC/RO: Ghada S. Elchoufi, GSE
4/25/2007

Revision Page

Revision	Revision Date	Affected Section	Description of Change
0	4-25-07	N/A	Initial Issue

Table of Contents

Section Page

1.0 SCOPE 4
1.1 General Description 4
1.2 Background 4
2.0 GENERAL ACRONYMS/ABBREVIATIONS OFR THE PROJECT MO9A. 5
3.0 DESCRIPTION OF PHYSICAL WORK 5
3.1 Performance Category and Functional Classification (SS, PS,) 5
3.2 Mechanical/Nuclear/Process 6
3.3 Instrumentation and Controls 7
3.4 Electrical 7
3.5 Plant Design 8
3.6 Civil/Structural/Architectural 8
4.0 ASSUMPTIONS 8
4.1 General Assumptions 8
4.2 Specific Assumptions 8
5.0 Technology Development Issues 9
6.0 REFERENCES 9
6.1 Drawing List 9
6.2 Design Input Documents 10
6.3 Applicable SRS & Industry Codes, Guides and Standards 10
6.4 Related Scopes of Work (SOW) 10
6.5 Miscellaneous 11
7.0 ATTACHMENTS. 11
7.1 Attachment 1, Bulk material List – C/S/A 12
7.2 Attachment 2, Bulk Material List – Electrical Cable and Conduit. 13

1.0 SCOPE

1.1 General Description

This Scope of Work (SOW) covers the Bagless Transfer System for the Plutonium Disposition Project. The Bagless Transfer System encases the Vit Can produced in Vitrification System into a Bagless Can.

The Bagless Transfer System (BTS) consists of one glovebox and three identical air hoods. The three identical air hoods are connected to the glovebox through specially designed septum like partitions called sphincter seals. These seals maintain the helium / air atmosphere in the glovebox and prevent the spread of contamination into the air hoods. The glovebox also contains three resistance welders and three pneumatic jacks to apply a force of about a ton during the brief period of resistance welding process. A can cutter is available in the glovebox to cut open Bagless Cans that failed either the leak check or visual inspection. The bagless can caps are also stored in the glovebox. Each of the three air hoods contain equipment to test for leakage and alpha contamination and a rack to house a supply of bagless cans.

The Vit can is remotely inserted into an empty Bagless Can, a hollow double partitioned lid (bagless can cap) is inserted into the open end of the Bagless Can and the pneumatic press is activated. While the cap is pushed tight into the bagless can with about a ton of force, resistance welding is completed by applying pulses of very high amperage (~2000 amps) current through the Bagless Can. After the welding, the orbiting Can cutter (one can cutter is located in each airhood) will cut the hollow cap between the two partitions. The Bagless Can will be separated from the remaining stub and moved for leak and alpha contamination tests. The remaining portion of the cap (bung) will stay in the sphincter seal until a new Bagless Can is pushed from the air hood side through the sphincter seal dislodging the bung from the sphincter seal into the glovebox for disposal as waste. This operating sequence maintains the integrity of the glovebox and insures the Bagless Can remains contamination free.

1.2 Background

The Office of Environmental Management has approximately 13 metric tons (MT) of plutonium in approximately 21 MT bulk materials without any defined disposition path. The Plutonium Disposition (PUD) Project is critical to meet the Department of Energy's strategic goal of providing a responsible resolution to the permanent disposal of the nation's excess high-level radioactive materials and waste; and to enable the cleanup of Environmental Management sites.

The Plutonium Disposition Facility (PDF) will be located at the K-Area Complex (KAC) to disposition up to approximately 13 Metric Tons (MT) of Environmental Management (EM) owned surplus plutonium. The facility will utilize a vitrification process to vitrify plutonium into a lanthanide borosilicate (LaBS) glass matrix. This glass will be packaged into bagless transfer cans and placed inside a Defense Waste Processing Facility (DWPF) type canister. The canister will be transported to DWPF and filled with High Level Waste (HLW) glass. The DWPF canisters will be stored in the Glass Waste Storage Buildings and later transported to the geologic repository at Yucca Mountain.

This Scope of Work (SOW) has been developed for the purpose of facilitating **construction** cost and schedule estimates for the Conceptual Design Report (CDR) on the PUD project. The input to this SOW was the approved technical baseline consisting of a Facility Design Description (FDD) and associated System Design Descriptions

(SDD). Every intent has been made to assure alignment and consistency between this SOW and the appropriate sections of the technical baseline, in order to provide accurate estimates. This SOW is not a PUD technical baseline document. A more detailed description of the system can be found in the associated SDD listed in the reference section.

A HOLD is placed to identify information that is preliminary in nature, results from a design uncertainty, originates from insufficient documentation, needs verification, or identifies a discrepancy. A **TBD** is placed to identify places in the text where numeric values or descriptive information is not available at the time that the current revision of the SOW is released.

2.0 GENERAL ACRONYMS/ABBREVIATIONS OFR THE PROJECT MO9A.

DCS	Distributed Control System
DS	Design Services
DWPF	Defense Waste Processing Facility
GIS	Gamma Isotopic System
GS	General Services
IMC	Intermediate Metallic Conduit
KAC	K-Area Complex
LaBS	Lanthanide Borosilicate
LLW	Low Level Waste
MC&A	Material Control and Accountability
MCC	Motor Control Center
MT	Modification Traveler
NFPA	National Fire Protection Association
PC	Performance Category
PC&S	Process and Control Services Department
PU	Plutonium
PUD	Plutonium Disposition
PuVit	Plutonium Vitrification
SC	Safety Class
SDD	System Design Description
SOW	Scope Of Work
SRS	Savannah River Site
SS	Safety Significant
SSC	Structure, System, Component
TBD	To Be Determined
UCNI	Unclassified Controlled Nuclear Information
UNO	Unless Noted Otherwise
WSRC	Washington Savannah River Company

3.0 DESCRIPTION OF PHYSICAL WORK

3.1 Performance Category and Functional Classification (SS, PS,)

3.1.1 Performance Category

3.1.1.1 The performance category for all systems, structures and components associated with the Bagless Transfer System is PC-2. (Reference 6.2.2.1 X-SYD-K-00007, Rev. C)

3.1.2 Functional Classification

3.1.2.1 The systems in this SOW shall be designed in accordance with the requirements of WSRC Manual WSRC-E7, Conduct of Engineering and Technical Support Procedure 2.25 Rev 14, “Functional Classification”, as follows:

A. Can cutter

1. Functional Classification – Production Support (PS)

B. Resistance Welder

1. Functional Classification – Production Support (PS)

C. Leak Tester

1. Functional Classification - Production Significant (PS)

D. Alpha Contamination Tester

1. Functional Classification - Safety Significant (SS)

3.2 Mechanical/Nuclear/Process

3.2.1 Bagless Transfer Air Hood Components

3.2.1.1 Refer to M-M8-K-00014 for the basic block flow diagram for the Bagless transfer System. The system consists of one (1) Glovebox and three (3) Air Hoods: Major components within the Air Hoods are

A. Can Cutter (3 each)

B. Alpha Contamination Tester (3 each)

C. Leak Tester (3 each)

D. Manual RemoteHoists (3 each)

3.2.2 Glovebox

M-SPP-K-00059 describes the requirements of a standard glovebox. Drawing SK-DE-BTS-0002 shows the glovebox layout. The present glovebox arrangement allows access to only one side. Glovebox will contain the following major items:

3.2.2.1 Can Cutter (1 each)

3.2.2.2 Resistance Welder (3 each)

Refer to M-M8-K-00014 for the basic block flow diagram.

3.2.3 Piping

3.2.3.1 Piping material is designated by a “P-code” designation from SRS Document WSRC-IM-95-58. The piping material will be welded or utilize flange fittings.

Process piping connected to equipment will have double valving for safety and ease of maintenance.

3.3 Instrumentation and Controls

3.3.1 Material Control and Accountability (MC&A)

3.3.1.1 Refer to Control Block Diagram J-J8-K-00035 for MC&A instrumentation associated with the Bagless Transfer building block. Refer to MC&A Network Drawing, J-J8-K-00049 for connectivity with the MC&A System.

3.3.1.2 Scale (1 each)

The bagless can weigh scale, BTS-SCL-001 (Data Sheet J-JD-K-00065) weighs the bagless can in the input section of the glovebox.

3.3.1.3 Barcode Reader (1 each)

Details for barcode reader, BTS-RDR-001 are contained in Data Sheet J-JD-K-00064.

3.3.1.4 Calorimeters (13 each)

Details for the calorimeters, BTS-CALM-001 throughBTS-CALM-013 are contained in Data Sheet J-JD-K-00062. The calorimeter measuring wells are located on the -40 bagless process area and the calorimeter computer racks, BTS-CALM-001A through BTS-CALM-001G are located at the -20 level in the NDA Electrical Room.

3.3.1.5 Gamma Isotopic System (4 each)

Details for the Gamma Isotopic Systems, BTS-GRIS 001 through BTS-GRIS-004 are contained in Data Sheet J-JD-K-00063. The isotope measuring detectors are located on the -40 level bagless process area and the GIS computer racks BTS-GRIS-001A and BTS-GRIS-001B, for these items are located at the -20 level in the NDA Electrical Room. The Gamma Isotopic Systems have mechanical coolers instead of the normally 30 liter nitrogen dewars to eliminate the need for nitrogen cooling.

3.4 Electrical

3.4.1 The scope will include following electrical components and services. The major electrical components will be provided as Engineered Equipment. This Scope of Work includes all raceway, power, control cables/terminations between field equipment and local controls. Provide onsite setup and assembly of the referenced Engineered Equipment. Refer to the attached Bulk Takeoff for cable and conduit descriptions and quantities.

3.4.1.1 Provide power feeds to three laser cutters BTS-CUTR-001, 002 & 003 located in Bagless transfer area from motor control center ELNH-MCC-24E located at -20' level in Electrical Room #2. See single line diagram E-E2-K-02244.

3.4.1.2 Provide power to three weld controllers BTS-JC-001, 002 & 003 from ELNH-MCC-24E. Extend feeders from weld controllers to welder transformers BTS-XFMR-001, 002 & 003 located on -40' level. See E-E2-K-02244.

3.4.1.3 Provide power to three welders located in glove box from welding transformers by bus connections as provided by manufacturer.

3.4.1.4 Provide 20A, 120V power circuits to Alpha Contamination Tester (3 each) from panel ELLV-PNL-11.

3.4.1.5 Provide 20A, 120V power circuits to Leak Tester (3 each) from panel ELLV-PNL-11.

3.4.1.6 Provide 20A, 120V power circuit to one can cutter located in glow box from panel ELLV-PNL-11.

3.4.1.7 Provide general convenience 20A, 120V power duplex receptacles and other instrument power circuits located in the glow box and in NDA equipment room from panel ELLV-PNL-11 (30 each).

3.5 Plant Design

3.5.1 There is no piping involved inside the glovebox and airhoods.

3.6 Civil/Structural/Architectural

3.6.1 Refer to C-SOW-K-00009.

3.6.2 The C/S/A scope of work required for installation of supports for the major components of Bagless Transfer System is as follows.

3.6.3 <u>Glovebox</u>
The size of the Glovebox is L-shaped 12’ & 10’ long x 4’wide x 6’ high and weighs approximately 53000 lbs. It is supplied with 10 legs with a 6”x6” plate at the bottom. Each leg will be welded to a base plate 12”x12”x ¾” thick and anchored with ¾” diameter bolts to the concrete slab.

3.6.4 Air Hoods [3]
The size of <u>each</u> Air Hood is 16’ long x 4’wide x 6’ high and weighs approximately 16000 lbs. It is supplied with 6 legs with a 6”x6” plate at the bottom. Each leg will be welded to a base plate 12”x12”x ¾” thick and anchored with ¾” diameter bolts to the concrete slab.

4.0 ASSUMPTIONS

4.1 General Assumptions

4.1.1 The Construction Agency will be the SRS Construction Group. DS will provide engineering documentation for the installation of this equipment and will rely on the use of SRS Guides and Standards.

4.1.2 SRS Construction Group will procure all bulk materials.

4.1.3 SRS Construction Group will procure all off-the-shelf components and equipment identified on engineering data sheets that do not require testing or quality documentation.

4.2 Specific Assumptions

4.2.1 Instrumentation and Controls

4.2.1.1 No specific assumptions have been made in this group.

4.2.2 Electrical

4.2.2.1 Connections from the welding transformers to welders in the glow box will be custom manufactured and will be provided by the vendor and installed by the construction.

4.2.3 Plant Design

4.2.3.1 No specific assumptions have been made in this group

4.2.4 Civil/Structural/Architectural

4.2.4.1 Core drills will be required for routing electrical conduit through walls or floors.

4.2.4.2 Assume all anchor bolts used for equipment and commodity supports will be A36 Drillco Maxi bolts. Alternatively, Hilti Kwik Bolts -TZ are acceptable for anchoring items.

4.2.4.3 Assume Functional Classification for drilling holes in concrete surface is SC.

4.2.4.4 Standard HVAC Duct support and details.

4.2.4.5 Any components inside Air Hoods, Glovebox etc. are considered as integral parts of the Air Hoods and Glovebox.

4.2.4.6 The material for all the base plates and structural steel components shall be Galvanized Carbon Steel.

5.0 Technology Development Issues

There are several issues such as Laser Cutter, Resistance Welder – Vertical vs Horizontal, new technology etc.

6.0 REFERENCES

6.1 Drawing List

6.1.1 PUD Project Drawings & Sketches

6.1.1.1 M-M8-K-00014 – Bagless Transfer System Block Flow Diagram
6.1.1.2 M-M8-K-00008 – Bagless Transfer
6.1.1.3 M-M5-K-01972 – Bagless Transfer System Glovebox Ventilation Diagram
6.1.1.4 J-J8-K-00035, Rev. B – Bagless Transfer MC&A Control Block Diagram
6.1.1.5 J-JD-K-00062, Rev. A - Bagless Transport Calorimetrs
6.1.1.6 J-JD-K-00063, Rev. A - Bagless Transfer Gamma Isotopic System
6.1.1.7 J-JD-K-00064, Rev. A - Bagless Transfer Barcode Reader
6.1.1.8 J-JD-K-00065, Rev. A - Bagless Transfer Bagless Can Weigh Scale
6.1.1.9 SK-DE-BTS-0002 - Bagless Transfer Glovebox Layout Drawing (2 pages)
6.1.1.10 SK-DE-BTS-0003, Rev. A - Bagless Transfer Facility Layout
6.1.1.11 M-DS-K-00157 Bagless Can Cutter
6.1.1.12 E-E2-K-02244 – Motor Control Center ELNH-MCC-02244 Single Line Diagram
6.1.1.13 E-E2-K-02233 – Motor Control Center ELNH-MCC-18M Single Line Diagram

6.1.1.14 J-J8-K-00049 – Material Control and Accountability (MC&A) Network Block Diagram

6.1.2 Existing Savannah River Site (SRS) Drawings

6.2 Design Input Documents

The following Facility Design Description and System Design Descriptions are the baseline documents used to develop this SOW.

6.2.1 Facility Design Description

6.2.1.1 G-FDD-K-00001, Rev C "PUV Facility Design Description"

6.2.2 System Design Description

6.2.2.1 X-SYD-K-00007, Rev. C "Bagless Transfer System (07) (BTS)"

6.3 Applicable SRS & Industry Codes, Guides and Standards

6.3.1 Industry Codes and Standards

6.3.1.1 NFPA 70, 2005 – National Electrical Cod

6.3.2 SRS Guides & Standards

6.3.2.1 WSRC-TM-95-1, Standard no. 15060, Rev. 14 "ASME B31.3 Additional Requirements of SRS Piping Systems"
6.3.2.2 WSRC-TM-95-1, Standard no. 15980, Rev. 6, "Mechanical Installation of Safety Class and Safety Significant Instrumentation"
6.3.2.3 WSRC-IM-95-58, Guide no. 15980-G, Rev.3, "Installation and Calibration of Instruments"
6.3.2.4 WSRC-IM-95-58, Guide no. 16051-G, Rev.2, "Installation of Electrical Raceway Systems and Cable Trays"
6.3.2.5 WSRC-IM-95-58, Guide no. 16052-G, Rev.3, "Installation of Electrical Wires, Cables and Terminations"
6.3.2.6 WSRC-IM-95-58, Guide no. 16053-G, Rev.2, "Installation of Electrical Equipment"
6.3.2.7 WSRC-IM-95-58, Guide no. 16056-G, Rev.2, "Installation of Grounding Systems"

6.3.2.8 WSRC-IM-95-58, Guide 03251-G, Rev: 1, Concrete Anchors.
6.3.2.9 WSRC-IM-95-58, Guide 03252-G, Rev: 1, Installation and Testing of Concrete Anchors.
6.3.2.10 WSRC-IM-95-58, Guide 09900-G, Rev. 2, Architectural Field Painting.
6.3.2.11 WSRC-IM-95-58, Guide 09901-G, Rev. 2, Protective Coatings - Concrete and Masonry

6.4 Related Scopes of Work (SOW)

6.4.1 C-SOW-K-00009, Civil/Structural/Architectural Systems.

6.4.2 M-SOW-K-00020, HVAC System.

6.4.3 E-SOW-K-00017, Electrical Power Supply System.

6.4.4 J-SOW-K-00002, Integrated Control System/ and MC&A Network.

6.5 Miscellaneous

6.5.1 C-CI-G-0039, Rev: 0, Electrical Conduit and Equipment Supports.
6.5.2 C-CH-G-00004, Rev. 0, Routing & Supports for NPS 2 and Smaller Piping.

7.0 ATTACHMENTS.

7.1 Attachment 1, Bulk material List – C/S/A
7.2 Attachment 2, Bulk Material List – Electrical Cable and Conduit.

7.1 Attachment 1, Bulk material List – C/S/A

Base Plates	12” x 12” x ¾” thick	16 Ea.
Anchor Bolts	¾” Diameter	64 Ea.

7.2 Attachment 2, Bulk Material List – Electrical Cable and Conduit.

Scope Set: Bagless Transfer System **Date:** 4/11/2007

Prepared By: G. S. Rao **Reviewed By:** Suman Shah

Exterior Glovebox Cables

Sum of Qty XGB (ft)	
Ext. Cable Size/Type	Total
3/C # 6 with #10 ground	360
1/C # 4/0 with 1/C # 4 gnd	1,800
3/C #12	5,980
Vendor Cable	12
Vendor Cable 12/C Cable w/connectors at both ends	3,570
3/C #18	240
2/0 Gnd	200
Grand Total	12,162

Interior Glovebox Cables

Sum of Qty NGB (ft)	
GB Cable Size/Type	Total
3/C #12	140
Vendor Cable	12
Grand Total	152

All Raceway Types

Sum of Qty Rcwy (ft)	
RCWY	Total
0	0
3/4" IMC	7950
2" IMC	60
2-1/2" IMC	200
Grand Total	8210

All Raceway Types Grouped by Red Designation

Sum of Qty Rcwy (ft)		
Red	RCWY	Total
N	0	0
	3/4" IMC	7,950
	2" IMC	60
	2-1/2" IMC	200
Grand Total		8,210

7.2 Continued

	Description:	Bagless Transfer System Bulk Materials, Cable and Conduit											
	Reference:	E-E2-K-02244 (MCC-24E)											
		All Conduits are IMC (Intermediate Metallic Conduit) type.											
					Cable Estimates (Exterior GB)	**GB Pentr**	**(Interior. GB)**	**Shared Rcwy/Tray**	**Raceway Estimates**				
Item #	**From Equipment**	**To Equipment**	**XGB Length (A) (ft)**	**Qty (A)**	**Cable size/type**	**Conn. (Qty)**	**Length (B) (ft)**	**Length (C) (ft)**	**Length (D) (ft)**	**Qty (D)**	**Size/Desc. (D)**	**Red**	**Notes/Comments**
1	MOTOR CONTROL CENTER ELNH-MCC-24E	Laser Cutter BTS-CUTR-001	120	1	3/C # 6 with #10 ground				100	1	3/4" IMC	N	E-E2-K-02244
2	MOTOR CONTROL CENTER ELNH-MCC-24E	Laser Cutter BTS-CUTR-002	120	1	3/C # 6 with #10 ground				100	1	3/4" IMC	N	E-E2-K-02244
3	MOTOR CONTROL CENTER ELNH-MCC-24E	Laser Cutter BTS-CUTR-003	120	1	3/C # 6 with #10 ground				100	1	3/4" IMC	N	E-E2-K-02244
4	MOTOR CONTROL CENTER ELNH-MCC-24E	Weld Controller BTS-JC-001	40	3	1/C # 4/0 with 1/C # 4 gnd				20	1	2" IMC	N	E-E2-K-02244
5	MOTOR CONTROL CENTER ELNH-MCC-24E	Weld Controller BTS-JC-002	40	3	1/C # 4/0 with 1/C # 4 gnd				20	1	2" IMC	N	E-E2-K-02244
6	MOTOR CONTROL CENTER ELNH-MCC-24E	Weld Controller BTS-JC-003	40	3	1/C # 4/0 with 1/C # 4 gnd				20	1	2" IMC	N	E-E2-K-02244
7	Weld Controller BIS-JC-001	Welder Transformer BTS-XFMR-001	120	4	1/C # 4/0 with 1/C # 4 gnd				100	1	2-1/2" IMC	N	E-E2-K-02244
8	Weld Controller BIS-JC-002	Welder Transformer BTS-XFMR-002	120	4	1/C # 4/0 with 1/C # 4 gnd				100	1	2-1/2" IMC	N	E-E2-K-02244
9	Weld Controller BIS-JC-003	Welder Transformer BTS-XFMR-003	120	4	1/C # 4/0 with 1/C # 4 gnd				100	1	2-1/2" IMC	N	E-E2-K-02244
10	Welder Transformer BTS-XFMR-001	WELDER # 1 BTS-WELD-001	4	1	Vendor Cable	1	4						E-E2-K-02244
11	Welder Transformer BTS-XFMR-002	WELDER # 1 BTS-WELD-002	4	1	Vendor Cable	1	4						E-E2-K-02244
12	Welder Transformer BTS-XFMR-003	WELDER # 1 BTS-WELD-003	4	1	Vendor Cable	1	4						E-E2-K-02244
13	120 V Power Panel ELLV-PNL-11	Alpha Contamination Tester No.1	115	1	3/C #12	1	20		75	1	3/4" IMC	N	
14	120 V Power Panel ELLV-PNL-11	Alpha Contamination Tester No.1	115	1	3/C #12	1	20		75	1	3/4" IMC	N	
15	120 V Power Panel ELLV-PNL-11	Alpha Contamination Tester No.3	115	1	3/C #12	1	20		75	1	3/4" IMC	N	
16	120 V Power Panel ELLV-PNL-11	Leak Tester No.1	115	1	3/C #12	1	20		75	1	3/4" IMC	N	
17	120 V Power Panel ELLV-PNL-11	Leak Tester No.2	115	1	3/C #12	1	20		75	1	3/4" IMC	N	
18	120 V Power Panel ELLV-PNL-11	Leak Tester No.3	115	1	3/C #12	1	20		75	1	3/4" IMC	N	

7.2 Continued

19	120 V Power Panel ELLV-PNL-11	Can Cutter (in GB)	190	1	3/C #12	1	20		150	1	3/4" IMC	N	
20	120 V Power Panel ELLV-PNL-11	Duplex Receptacles & Equipments	170	30	3/C #12				150	30	3/4" IMC	N	
21	CALORIMETER COMPUTER RACKS 1 THRU' 7 BTS-CALM-001A THRU' BTS-CALM-001G	CALORIMETERS (13)	170	13	Vendor Cable 12/C Cable w/connectors at both ends				150	13	3/4" IMC	N	J-J8-K-00035
22	GIS Computer Rack # 1 BTS-GRIA-001A	GAMMA ISOTOPIC SYSTEM # 1 BTS-GRIS-001	170	1	Vendor Cable 12/C Cable w/connectors at both ends				150	1	3/4" IMC	N	J-J8-K-00035
23	GIS Computer Rack # 1 BTS-GRIA-001A	GAMMA ISOTOPIC SYSTEM # 2 BTS-GRIS-002	170	1	Vendor Cable 12/C Cable w/connectors at both ends				150	1	3/4" IMC	N	J-J8-K-00035
24	GIS Computer Rack # 1 BTS-GRIA-001A	GAMMA ISOTOPIC SYSTEM # 3 BTS-GRIS-003	170	1	Vendor Cable 12/C Cable w/connectors at both ends				150	1	3/4" IMC	N	J-J8-K-00035
25	GIS Computer Rack # 1 BTS-GRIA-001A	GAMMA ISOTOPIC SYSTEM # 4 BTS-GRIS-004	170	1	Vendor Cable 12/C Cable w/connectors at both ends				150	1	3/4" IMC	N	J-J8-K-00035
26	GIS Computer Rack # 1 BTS-GRIA-001A	GAMMA ISOTOPIC SYSTEM # 5 BTS-GRIS-005	170	1	Vendor Cable 12/C Cable w/connectors at both ends				150	1	3/4" IMC	N	J-J8-K-00035
27	MCA-CAB-8	CAN WEIGH SCALE BTS-SCL-01	120	1	3/C #18				100	1	3/4" IMC	N	J-J8-K-00035
28	MCA-CAB-8	BAR CODE READER BTS-RDR-001	120	1	3/C #18				100	1	3/4" IMC	N	J-J8-K-00035
29	Equipment	Ground Grid	200	1	2/0 Gnd								
30	TOTAL GB PENETRATIONS					20							

PLUTONIUM DISPOSITION PROJECT (U)
Project M09A

SCOPE OF WORK

M-SOW-K-00016 Revision 0
for
Waste Management System
(U)

Originated by: _____ Date: 4/17/2007
Ghada S. Elchoufi
C/S/A Lead

Reviewed by: _____ Date: 4/17/2007
N. Shanmuganathan
Mechanical Engineer

Approved by: _____ Date: 4/17/07
Clayton Holloway
Mechanical Lead

Approved by: _____ Date: 4/17/07
Roderick King
Electrical/I&C Lead

Approved by: _____ Date: 4-17-07
Drew Negus
Plant Design Lead

Approved by: _____ Date: 4/18/07
John Hammond
Construction Lead

Approved by: _____ Date: 4-17-07
Eddie Estochen
Design Authority

Approved by: _____ Date: 4/18/07
B.C. Patel
Project Engineer

UNCLASSIFIED
DOES NOT CONTAIN UNCLASSIFIED CONTROLLED NUCLEAR INFORMATION

ADC/RO: G. Elchoufi, GSE

Date: 3/26/07

Revision Page

Revision	Revision Date	Affected Section	Description of Change
0	4/17/2007	N/A	Initial Issue

Table of Contents

Section		Page
1.0	**SCOPE**	**4**
1.1	General Description	4
1.2	Background	5
2.0	**ACRONYMS/ABBREVIATIONS**	**6**
3.0	**DESCRIPTION OF PHYSICAL WORK**	**6**
3.1	Performance Category and Functional Classification	6
3.2	Mechanical/Nuclear/Process	7
3.3	Instrumentation and Controls	7
3.4	Electrical	8
3.5	Plant Design	8
3.6	Civil/Structural/Architectural	8
4.0	**ASSUMPTIONS**	**9**
4.1	General Assumptions	9
4.2	Specific Assumptions	9
4.3	High Business Decision Estimate Range (HBDER)	10
4.4	Maintenance Strategy	10
5.0	**TECHNOLOGY DEVELOPMENT ISSUES**	**10**
6.0	**REFERENCES**	**10**
6.1	Drawing List	10
6.2	Design Input Documents	10
6.3	Applicable SRS & Industry Codes, Guides and Standards	11
6.4	Related Scopes of Work (SOW)	11
6.5	Miscellaneous	12
7.0	**ATTACHMENTS**	**12**
Attachment 1. I&C Bulk Materials		13

1.0 SCOPE

1.1 General Description

This Scope of Work (SOW) Covers the Waste Management System for the Plutonium Disposition Project. The Waste Management System handles waste generated during the D&R phase and Operational Phase.

Waste generated during the D&R phase is covered under the D&R SOW (Reference P-SOW-K-00001).

Waste generated during the Operational Phase is covered in this document. The Operational Phase waste contains waste generated during Green Fuel Disassembly, Feed Preparation, Oxidation, Milling & Mixing and Vitrification of Plutonium oxide, Bagless Transfer and Balance of Plant activities. This system removes waste from the generation point, performs the appropriate measurements, packages waste, and prepares waste for shipment to the disposal location. The waste types that are anticipated are:

- Clean Waste
- Low Level Waste (LLW)
- Transuranic Waste (TRU)
- Mixed/Hazardous Waste
- PCB Waste
- Mixed TRU Waste
- Low Level Liquid Waste
- Liquid Waste
- Beryllium Waste

For all types of wastes, see Document Number SK-DA-WM-0001, Revision B. The predominant waste types are LLW and TRU waste. The following sections discuss how these wastes would be handled.

<u>LLW</u>
LLW is generated from various sources such as room waste, job control waste, glovebox waste that meet LLW classification criteria, and containment devices. Except for the glovebox LLW which is originally collected in pails then reclassified from TRU to LLW after assay, all LLW is collected in RAD bags and is segregated with regard to the waste stream. Receptacles, which are lined with a RAD bag, are located throughout the facility for collection of LLW. Each bag of LLW is labeled, identifying the generated location, date, alpha room posting and Waste Handler initials and shift. Waste Operators will label the bags with unique numbers assigned by the GCO/Alt and ensure RCO obtains the dose rate or contamination level.

<u>TRU Waste</u>
TRU waste is generated from glovebox waste and job control waste.
TRU waste is collected in containers and stored within a buffer area with nuclear criticality controls until initially assayed. An Active-Passive Nuclear Multiplicity Counter (NMC) will be used to perform the initial assay of TRU pails so they can then be placed into a storage rack that allows for closer spacing. The TRU pails are then stored in a rack pending accountability measurements. Large items are assayed with a portable NDA system to allow removal from the criticality buffer area. To obtain final assay values, the measurement of TRU pails occurs using a gamma isotopic system. Often the TRU pail is placed back into the storage rack pending final packaging. TRU pail waste is removed from the pail and placed in a drum liner inside a containment device with

filtration. Drum liners are loaded into drums which are assayed prior to leaving the facility to ensure no diversion of SNM occurred.

As part of waste minimization, a LLW/TRU Waste Assay instrument is located in a shielded area to reduce background radiation levels to determine if certain categories of TRU waste are in actuality LLW.

Space is allocated for TRU pail storage, pail and drum NDA equipment, LLW/TRU Assay instrument and shielding, drum-liner loading within a containment device, and drum loading.

1.2 Background

The Office of Environmental Management has approximately 13 metric tons (MT) of plutonium in approximately 21 MT bulk materials without any defined disposition path. The Plutonium Disposition (PUD) Project is critical to meet the Department of Energy's strategic goal of providing a responsible resolution to the permanent disposal of the nation's excess high-level radioactive materials and waste; and to enable the cleanup of Environmental Management sites.

The Plutonium Vitrification Facility (PVF) will be located at the K-Area Complex (KAC) to disposition up to approximately 13 Metric Tons (MT) of Environmental Management (EM) owned surplus plutonium. The facility will utilize a vitrification process to vitrify plutonium into a lanthanide borosilicate (LaBS) glass matrix. This glass will be packaged into bagless transfer cans and placed inside a Defense Waste Processing Facility (DWPF) type canister. The canister will be transported to DWPF and filled with High Level Waste (HLW) glass. The canisters will be stored in the Glass Waste Storage Buildings and later transported to the geologic repository at Yucca Mountain.

This Scope of Work (SOW) has been developed for the purpose of facilitating construction cost and schedule estimates for the Conceptual Design Report (CDR) on the PUD project. The input to this SOW was the approved technical baseline consisting of a Facility Design Description (FDD) and associated System Design Descriptions (SDD). Every intent has been made to assure alignment and consistency between this SOW and the appropriate sections of the technical baseline, in order to provide accurate estimates. This SOW is not a PUD technical baseline document. A more detailed description of the system can be found in the associated SDD listed in the reference section.

A **HOLD** is placed to identify information that is preliminary in nature, results from a design uncertainty, originates from insufficient documentation, needs verification, or identifies a discrepancy. A **TBD** is placed to identify places in the text where numeric values or descriptive information is not available at the time that the current revision of the SOW is released.

2.0 ACRONYMS/ABBREVIATIONS

AC	Alternating Current
AMS	Automated Monitoring System
APNMC	Active/Passive Neutron Multiplicity Counter
D&R	Demolition and Removal
DWPF	Defense Waste Processing Facility
HVAC	Heating, Ventilation and Air Conditioning
IMC	Intermediate Metallic Conduit
KAC	K-Area Complex
LaBS	Lanthanide Borosilicate
LLW	Low Level Waste
MC&A	Material Control and Accountability
NMC	Neutron Multiplicity Counter
MT	Modification Traveler
NFPA	National Fire Protection Association
PC	Performance Category
PIDAS	Perimeter Intrusion Detection and Assessment System
PU	Plutonium
PUD	Plutonium Disposition
PVF	Plutonium Vitrification Facility
SC	Safety Class
SDD	System Design Description
SOW	Scope Of Work
SRS	Savannah River Site
SS	Safety Significant
SWB	Standard Waste Box
TBD	To Be Determined
TRU	Transuranic
WM	Waste Management
WSRC	Washington Savannah River Company

3.0 DESCRIPTION OF PHYSICAL WORK

3.1 Performance Category and Functional Classification

3.1.1 Performance Category

3.1.1.1 The Performance Category of the equipment associated with WM such as the TRU waste drums, SWB, the configuration design of unassayed waste storage racks, and TRU container vents is PC2. (Refer to M-SYD-K-00007)

3.1.1.2 The Performance Category for the equipment of the assay, accountability, loading or movement is PC1.

3.1.2 Functional Classification

3.1.2.1 The Waste Management System shall be designed in accordance with the requirements of WSRC Manual WSRC-E7, Conduct of Engineering and Technical Support Procedure 2.25 Rev. 14, “Functional Classification”.

3.1.2.2 The Functional Classification of the equipment associated with WM such as the TRU waste drums, SWB, the configuration design of unassayed waste storage racks, and TRU container vents is Safety Significant (SS). (Refer to M-SYD-K-00007).

The functional Classification for the equipment of the assay, accountability, loading or movement is PS.

3.2 Mechanical/Nuclear/Process

N/A

3.3 Instrumentation and Controls

3.3.1 Integrated Control Systems

3.3.1.1 The ICS System has no interface with Waste Management

3.3.2 Material Control and Accountability

3.3.2.1 Refer to MC&A Network Block Diagram, J-J8-K-00049 for interface and hardware. Refer to individual Block Control Diagram J-J8-K-00038 for specific MC&A information on the Waste Management System.

3.3.2.2 Unless noted otherwise, the following NDA equipment will be installed in the TRU Waste Assay Room on the -20' level:

One TRU/LLW Waste Assay System (SPTR) - Reference Data Sheet J-JD-K-00161

One Portable Waste Assay System (SPTR) - Reference Data Sheet J-JD-K-00160

Two 25Kg Weigh Scales (SCL), Reference Data Sheet J-JD-K-00156, (one is located in LLW Staging Room)

One 500Kg Weigh Scale (SCL), Reference Data Sheet J-JD-K-00158

One 2000Kg Weigh Scale (SCL) (located in SWB Loading Room), Reference Data Sheet J-JD-K-00157

One 3500Kg Weigh Scale (SCL) (located in LLW Loading Room), Reference Data Sheet J-JD-K-00159

Three Portable Barcode Readers (RDR), Reference Data Sheet J-JD-K-00162

One Miscellaneous Field Instrumentation Cabinet (CAB)

One Server/Network Switch Cabinet (CAB)

One Operator Work Station (OWS)

3.3.2.2 An Operator Work Station (OWS) in the TRU Waste Assay Room is the primary collection point for Waste Management NDA information. The OWS is connected by CAT 5e cable to the Waste Management Server/Network Switch, WM-CAB-001.

3.3.2.3 The Waste Management Server/Network Switch, WM-CAB-001, is the Central

Processing Unit (CPU) for the local Waste Management Network. All NDA data is collected and stored in this Server. Wiring to and from this Server is CAT 5e.

3.3.2.4 The Portable Waste Assay System, WM-SPTR-002, is a mobile NDA instrument with wiring connections expected to be CAT 5e. Other wire connection types can be expected depending on the brand and type of equipment purchased.

3.3.2.5 The TRU/LLW Waste Assay System, WM-SPTR-001, is a heavily shielded LLW measurement system. The weight of this unit can be approximately 10-18,000lbs. Electrical connections to the Server are with CAT 5e cable.

3.3.2.6 The Miscellaneous Field Instrumentation Cabinet, WM-CAB-002, houses the computer interface electronics for the five scales and three barcode readers. Input wiring from these field devices will be typical computer USB-type cables. Output wiring from this cabinet to the Server will be CAT 5e.

3.3.2.7 With the exception of the Portable Waste Assay System, individual 120 Vac branch circuits originating from a local 120Vac power panel in the TRU Waste Assay Room shall be provided to each of the WM accountability/monitoring equipments. The Portable Waste Assay System is battery powered but will require a 120Vac charging circuit.

3.3.2.8 There are five weigh scales in the Waste Management System. One 25Kg, WM-SCL-001, and one 500Kg scale, WM-SCL-003, are located in the TRU Waste Assay Room. Another 25Kg weigh scale, WM-SCL-002, is located in the LLW Staging Room. One 2000Kg weigh scale, WM-SCL-004, is located in the SWB Loading Room. One 3500Kg scale, WM-SCL-005, is located in the LLW Loading Room. All of these scales connect to the Miscellaneous Field Instrumentation Cabinet in the TRU Waste Assay Room.

3.3.2.9 The three barcode readers are portable and may be located in one of the four process rooms (TBD). The base stations for these items will be wired back to the Miscellaneous Field Instrumentation Cabinet with CAT 5e cables.

3.3.2.10 For cable and raceway bulk quantity listing refer to Attachment #1.

3.3.2.11 Install supplemental grounding conductors for each permanently installed WM equipment rack/skids.

3.4 Electrical

N/A

3.5 Plant Design

N/A

3.6 Civil/Structural/Architectural

3.6.1 Equipment inside the KAC building will be supported according to the equipment manufacturer's instructions.

3.6.2 For structural and architectural modifications to the building structure including penetrations, penetration seals and core drills refer to C-SOW-K-00009.

3.6.3 The Low Level Waste staging building is a 34'X50'X16' pre-engineered building. The

building including HVAC and electrical services will be provided and installed by an outside vendor. This scope is covered under C-SOW-K-00009.

3.6.4 The TRU waste will be staged in the Disassembly Basin Transfer Bay. See drawing SK-DE-WM-0001 for layout.

4.0 ASSUMPTIONS

4.1 General Assumptions

4.1.1 The Construction Agency will be the SRS Construction Group for modifications inside the KAC building.

4.1.2 The LLW staging building will be subcontracted to an outside vendor. See C-SOW-K-00009.

4.2 Specific Assumptions

4.2.1 Mechanical

N/A

4.2.2 Instrumentation and Controls

4.2.2.1 Construction scope includes initial calibration of instruments installed per this SOW.

4.2.2.2 Use of radiation resistant (hardened) cables or radiation hardened WM accountability/monitoring equipment is not anticipated.

4.2.2.3 The APNMC (Shuffler System) is currently scheduled to be part of another Project. It is assumed that it will be able to handle the WM throughput requirements, and therefore will not be within the scope of this document.

4.2.2.4 All waste will be assayed prior to loading into a Standard Waste Box (SWB). Full SWBs will be weighed, TIDs attached, relocated to the 0' level, then assessed using a passive-only Neutron Multiplicity Counter (i.e., slab detectors) to ensure no diversion of SNM, then taken to a staging area outside the MAA prior to final disposal. To avoid potential diversion, no partially filled SWBs will be staged in any location without access control, and TIDs attached between loadings.

4.2.2.5 WM monitoring and associated computers are part of (black) unclassified monitoring system.

4.2.3 Electrical

N/A

4.2.4 Plant Design

N/A

4.2.5 Civil/Structural/Architectural

4.2.5.1 Assume all anchor bolts used for equipment and commodity supports will be A36 Drillco Maxi Bolts. Alternatively, Hilti Kwik Bolts-TZ are acceptable for anchoring

items to the concrete surface.

4.2.5.2 Assume the Functional Classification for drilling holes in concrete surface is SC.

4.2.5.3 For electrical conduits and equipment supports, use cookbook No. C-CI-G-0039.

4.3 High Business Decision Estimate Range (HBDER)

There will be an automated link between the WM system and the MC&A network.

4.4 Maintenance Strategy

N/A

5.0 TECHNOLOGY DEVELOPMENT ISSUES

N/A

6.0 REFERENCES

6.1 Drawing List

6.1.1 PUD Project Drawings & Sketches

6.1.1.1 J-J8-K-00038 – Waste Management Control Block Diagram
6.1.1.2 J-JD-K-00156- 25kg Weigh Scale Data Sheet
6.1.1.3 J-JD-K-00158- 500kg Weigh Scale Data Sheet
6.1.1.4 J-JD-K-00157- 2000kg Weigh Scale Data Sheet
6.1.1.5 J-JD-K-00159- 3500kg Weigh Scale Data Sheet
6.1.1.6 J-JD-K-00161- TRU/LLW Waste Assay System Data Sheet
6.1.1.7 J-JD-K-00160- Portable Waste Assay System Data Sheet
6.1.1.8 J-JD-K-00162- Portable Barcode Reader Data Sheet
6.1.1.9 SK-DE-WM-0001 – TRU Waste Staging Facility & Low Level Waste Staging Building – Partial Floor Plan @ 0'-0"
6.1.1.10 P-PG-K-02141 General Arrangement Drawing
6.1.1.11 SK-DA-WM-0001, Revision B - Waste Study for the Plutonium Disposition Project in the K Area Complex.

6.1.2 Existing Savannah River Site (SRS) Drawings

N/A

6.2 Design Input Documents

The following Facility Design Description and System Design Descriptions are the baseline documents used to develop this SOW.

6.2.1 Facility Design Description

6.2.1.1 G-FDD-K-00001, Rev: B - PUV Facility Design Description

6.2.2 System Design Description

6.2.2.1 M-SYD-K-00007, Rev. B - System Design Description for the Plutonium

Vitrification Facility Waste Management System (12) (WM).

6.2.3 Safeguards and Security Requirements Identification document

6.2.3.1 S-SRI-K-00005, Rev: 0, KAC Safeguards and Security Requirements Identification Document for Plutonium Disposition.

6.2.4 Maintenance Strategy

6.2.4.1 M-ESR-K-00017, Rev: 0, “Plutonium Disposition Facility Maintenance and Replacement Strategy”.

6.3 Applicable SRS & Industry Codes, Guides and Standards

6.3.1 Industry Codes and Standards

6.3.1.1 NFPA 801, Standard for Fire Protection for Facilities Handling Radioactive Materials, February 6, 2003

6.3.1.2 NPPA 70, National Electrical Code, 2005 edition

6.3.2 SRS Guides & Standards

6.3.2.1 WSRC-IM-95-58, Standard 03252-G, Rev: 1, Installation and Testing of Concrete Anchors, December 19, 2005

6.3.2.2 WSRC-IM-95-58, Standard 15980-G, Rev: 3, Installation and Calibration of Instruments July 16, 2004

6.3.2.3 WSRC-IM-95-58, Standard 16051-G, Rev: 2, Installation of Electrical Raceway Systems and Cable Trays April 24, 2003

6.3.2.4 WSRC-IM-95-58, Standard 16052-G, Rev: 3, Installation of Electrical Wires, Cables and Terminations August 15, 2005

6.3.2.5 WSRC-IM-95-58, Standard 16053-G, Rev: 2, Installation of Electrical Equipment February 12, 2004

6.3.2.6 WSRC-IM-95-58, Standard 16056-G, Rev: 2, Installation of Grounding Systems August 19, 2003

6.3.2.7 WSRC-TM-95-1, Standard 03010, Rev: 1, Coring, Chipping, and Drilling in Concrete, December 19, 2005

6.3.3 DOE Orders & Standards

6.3.3.1 DOE Manual 470.4-6, Rev: Chg.1, Nuclear Materials Control and Accountability, August 14, 2006

6.3.3.2 DOE/RW-0333P, Rev: 17, Quality Assurance Requirements and Description, 5/8/2006

6.4 Related Scopes of Work (SOW)

6.4.2 E-SOW-K-00017, Electrical Power Supply System – This related SOW provides information on the electrical power supply for all systems. Electrical power is

supplied to main electrical distribution equipment, which is utilized to service process and BOP equipment electrical needs.

6.4.3 C-SOW-K-00009, Structural & Architectural Mods for Process Building

6.4.4 C-SOW-K-00010, Structural & Architectural Mods for Buildings outside the PIDAS.

6.4.4 J-SOW-K-00002, Integrated Control System – This related SOW provides the interface to (automated) process control systems and/or MC&A network equipment included associated with this work scope.

6.4.5 M-SOW-K-00027, Material Handling System – This related SOW provides details on how material is transported between systems.

6.4.6 S-SOW-K-00002, Safeguards and Securities – This related SOW provides details on safeguard and security measures being implemented for each of the systems.

6.5 Miscellaneous

6.5.1 C-CI-G-0039, Rev: 0, Electrical Conduit and Equipment Supports, February 9, 2005.

6.5.2 WSRC-TR-06-0043, Rev: 0, Plutonium Vitrification Facility Consolidated Hazard Analysis, January 2007.

7.0 ATTACHMENTS

Attachment 1. I&C Bulk Materials

Attachment 1. I&C Bulk Materials

Item #	From Equipment	To Equipment	Cable Estimates (Exterior GB)			Shared Rcwy/Tray	Raceway Estimates			
			XGB Length (A) (ft)	Qty (A)	Cable size/type	Length (C) (ft)	Length (D) (ft)	Qty (D)	Size/Desc. (D)	Notes/Comments
1	WM-OWS-001	WM-CAB-001	30	1	Cat 5E (4 PR#24)		20	1	3/4" IMC	
2	WM-SPTR-001	WM-CAB-001	50	1	Cat 5E (4 PR#24)		30	1	3/4" IMC	
3	WM-SPTR-002	WM-CAB-001	50	1	Cat 5E (4 PR#24)	30			3/4" IMC	Shared w/WM-SPTR-001
4	WM-CAB-002	WM-CAB-001	50	1	Cat 5E (4 PR#24)		30	1	3/4" IMC	
5	WM-RDR-001	WM-CAB-002	50	1	Cat 5E (4 PR#24)		30	1	3/4" IMC	
6	WM-RDR-002	WM-CAB-002	50	1	Cat 5E (4 PR#24)	30			3/4" IMC	Shared w/WM-RDR-001
7	WM-RDR-003	WM-CAB-002	50	1	Cat 5E (4 PR#24)	30			3/4" IMC	Shared w/ WM-RDR-001
8	WM-SCL-001	WM-CAB-002	50	1	Cat 5E (4 PR#24)		30	1	3/4" IMC	
9	WM-SCL-002	WM-CAB-002	200	1	Cat 5E (4 PR#24)		180	1	3/4" IMC	
10	WM-SCL-003	WM-CAB-002	50	1	Cat 5E (4 PR#24)	30			3/4" IMC	Shared w/WM-SCL-001
11	WM-SCL-004	WM-CAB-002	90	1	Cat 5E (4 PR#24)	50	20	1	3/4" IMC	Shared w/WM-SCL-002
12	WM-SCL-005	WM-CAB-002	150	1	Cat 5E (4 PR#24)	100	30	1	3/4" IMC	Shared w/WM-SCL-002
13	Power		15	12	3/c #12		12	12	3/4" IMC	

Attachment 1. I&C Bulk Materials (Continued)

Exterior Glovebox Cables

Sum of Qty XGB (ft)	
Ext. Cable Size/Type	Total
Cat 5E (4 PR#24)	870
3/c #12	180
Grand Total	1,050

All Raceway Types

Sum of Qty Rcwy (ft)	
RCWY	**Total**
3/4" IMC	514
Grand Total	514

PLUTONIUM DISPOSITION PROJECT (U)
Project M09A

SCOPE OF WORK

M-SOW-K-00017 Revision 1
for
Can-in-Canister Loading, Storage, and Transport System (U)

Originated by: _____ Date: 3/20/07
Marc Cameron
Mechanical Engineer

Reviewed by: _____ Date: 3/20/07
Edward Tefft
Senior Mechanical/Process Engineer

Approved by: _____ Date: 3/20/07
Clayton Holloway
Mechanical Lead

Approved by: _____ Date: 3/20/07
Roderick King
Electrical/I&C Lead

Approved by: _____ Date: 3/20/07
Ghada Elchoufi
C/S/A Lead

Approved by: _____ Date: 3-20-07
Drew Negus
Plant Design Lead

Approved by: _____ Date: 3-20-07
John Hammond
Construction Lead

Approved by: _____ Date: 3/20/07
Larry Milton
Design Authority

Approved by: _____ Date: 3/21/07
B.C. Patel
Project Engineer

UNCLASSIFIED
DOES NOT CONTAIN UNCLASSIFIED CONTROLLED NUCLEAR INFORMATION

ADC/RO: _____
Date: 3/20/07

Revision Page

Revision	Revision Date	Affected Section	Description of Change
0	3/9/07	N/A	Initial Revision
1	3/21/07	Section 3.2 and Attachment 2	Added Torque Wrench to Mechanical Equipment List and Updated Bulk C/S/A Materials

Table of Contents

Section **Page**

1.0 SCOPE 4
- 1.1 General Description 4
- 1.2 Background 4

2.0 ACRONYMS/ABBREVIATIONS 5

3.0 DESCRIPTION OF PHYSICAL WORK 5
- 3.1 Performance Category and Functional Classification (SC, SS, PS, GS) 5
- 3.2 Mechanical/Nuclear/Process 6
- 3.3 Instrumentation and Controls 8
- 3.4 Electrical 9
- 3.5 Plant Design 10
- 3.6 Civil/Structural/Architectural 10

4.0 ASSUMPTIONS 10
- 4.1 General Assumptions 10
- 4.2 Specific Assumptions 11
- 4.3 High Business Decision Estimate Range (BDER) 12
- 4.4 Maintenance Strategy 12

5.0 TECHNOLOGY DEVELOPMENT ISSUES 12

6.0 REFERENCES 12
- 6.1 Drawing List 12
- 6.2 Design Input Documents 13
- 6.3 Applicable SRS & Industry Codes, Guides and Standards 14
- 6.4 Related Scopes of Work (SOW) 15
- 6.5 Miscellaneous 15

7.0 ATTACHMENTS 15
- Attachment 1. Bulk Electrical Materials 16
- Attachment 2. Bulk C/S/A Materials 21

1.0 SCOPE

1.1 General Description

This Scope of Work (SOW) Covers the Can-in-Canister Loading, Storage and Transport System for the Plutonium Disposition Project. Can-in-Canister Loading, Storage and Transport receives Bagless Transfer Cans, assembles cans into magazines, stores magazines, and assembles magazines into DWPF canisters suitable for filling with high-level waste (HLW) glass. The Can-in-Canister Loading, Storage and Transport System receives bagless transfer cans from Bagless Can Storage via the Material Handling System. The loaded DWPF canisters are moved to DWPF via a Transportation Trailer.

1.2 Background

The Office of Environmental Management has approximately 13 metric tons (MT) of plutonium in approximately 21 MT bulk materials without any defined disposition path. The Plutonium Disposition (PUD) Project is critical to meet the Department of Energy's strategic goal of providing a responsible resolution to the permanent disposal of the nation's excess high-level radioactive materials and waste; and to enable the cleanup of Environmental Management sites.

The Plutonium Disposition Facility (PDF) will be located at the K-Area Complex (KAC) to disposition up to approximately 13 Metric Tons (MT) of Environmental Management (EM) owned surplus plutonium. The facility will utilize a vitrification process to vitrify plutonium into a lanthanide borosilicate (LaBS) glass matrix. This glass will be packaged into bagless transfer cans and placed inside a Defense Waste Processing Facility (DWPF) type canister. The canister will be transported to DWPF and filled with High Level Waste (HLW) glass. The canisters will be stored in the Glass Waste Storage Buildings and later transported to the geologic repository at Yucca Mountain.

This Scope of Work (SOW) has been developed for the purpose of facilitating construction cost and schedule estimates for the Conceptual Design Report (CDR) on the PUD project. The input to this SOW was the approved technical baseline consisting of a Facility Design Description (FDD) and associated System Design Descriptions (SDD). Every intent has been made to assure alignment and consistency between this SOW and the appropriate sections of the technical baseline, in order to provide accurate estimates. This SOW is not a PUD technical baseline document. A more detailed description of the system can be found in the associated SDD listed in the reference section.

A **HOLD** is placed to identify information that is preliminary in nature, results from a design uncertainty, originates from insufficient documentation, needs verification, or identifies a discrepancy. A **TBD** is placed to identify places in the text where numeric values or descriptive information is not available at the time that the current revision of the SOW is released.

2.0 ACRONYMS/ABBREVIATIONS

Acronym / Abbreviation	Definition
BDER	Business Decision Estimate Range
DCS	Distributed Control System
DOE	Department of Energy
DWPF	Defense Waste Processing Facility
FDD	Facility Design Description
GS	General Support
HLW	High-Level Waste
ICS	Integrated Control System
I&C	Instrumentation and Controls
LaBS	Lanthanide Borosilicate
KAC	K Area Complex
MC&A	Material Control and Accountability
MLS	Magazine Loading and Storage System
MT	Metric Tons
PDF	Plutonium Disposition Facility
PLC	Programmable Logic Controller
PS	Production Support
PUD	Plutonium Disposition
PUV	Plutonium Vitrification
SC	Safety Class
SDD	System Design Description
SOW	Scope of Work
SRS	Savannah River Site
SS	Safety Significant
TBD	To Be Determined
WSRC	Washington Savannah River Company

3.0 DESCRIPTION OF PHYSICAL WORK

3.1 Performance Category and Functional Classification (SC, SS, PS, GS)

3.1.1 Performance Category

3.1.1.1 The Performance Category for all functions in the Can-In-Canister Loading, Storage and Transport System is PC-2. (Refer to G-FDD-K-00001)

3.1.2 Functional Classification

3.1.2.1 The Can-In-Canister Loading, Storage and Transport System shall be designed in accordance with the requirements of WSRC Manual WSRC-E7, Conduct of Engineering and Technical Support Procedure 2.25 Rev. 14, “Functional Classification”.

3.1.2.2 All equipment in the Can-In-Canister Loading, Storage, and Transport System falls under the Functional Classification, Production Support (PS). (Refer to G-FDD-K-00001)

3.2 Mechanical/Nuclear/Process

3.2.1 Can-In-Canister Loading, Storage, and Transport System

3.2.1.1 Refer to the basic block flow diagram M-M8-K-00009 and layout sketch SK-DE-MLS-0001 for the Can-In-Canister Loading, Storage, and Transport System. This system is remotely operated using hoists, cranes, robots and other remotely operated equipment to load bagless transfer cans containing vitrified plutonium oxide into DWPF canisters and the canisters in turn onto a Transportation Trailer for transport to DWPF. The major components are:

- Pick and Place Robot :
  - Equipment No. MLS-ROB-020
- Bridge Robot with Telescoping Arm (Above Cells):
  - Equipment No. MLS-CRN-010 and MLS-ROB-010
- Overhead Bridge Crane with Hoist and Grapple:
  - Equipment No. MLS-CRN-050 and MLS-TRLY-050
- Magazine Loading Station:
  - Equipment No. MLS-STAT-031
- Canister Loading Station
- Bagless Can Lag Storage Rack
- Empty Magazine Storage Rack
- Loaded Magazine Storage Rack
- Empty Canister Storage Rack
- Loaded Canister Storage Rack
- Bagless Can Storage Rack
- Robotic Bridge Crane (Located in Bagless Storage Room)
  - Equipment No. MLS-CRN-001 and MLS-ROB-001
- Torque Wrench
  - Equipment No. MLS-TOOL-001

Note: All quantities for the above equipment are one each.

3.2.2 Pick and Place Robot

3.2.2.1 The Pick and Place Robot is designed to transfer bagless cans from the -14 level dumbwaiter to Bagless Can Lag Storage or the Magazine Loading Station (also Lag Storage to the Magazine Loading Station) to be scanned by a barcode reader. See Data Sheet No. M-DS-K-00084.

3.2.3 Bridge Robot with Telescoping Arm

3.2.3.1 The Bridge Robot with Telescoping Arm will be located above the Magazine Loading and Canister Loading cells and is designed to place loaded magazines into an empty canister or magazine storage rack. The telescoping arm allows for precise insertion of a magazine into a canister or designated storage rack position. The Bridge Robot with Telescoping Arm will handle all movement of empty and loaded magazines. See Data Sheet No. M-DS-K-00087.

3.2.4 Overhead Bridge Crane with Hoist and Grapple

3.2.4.1 The Overhead Bridge Crane (25 ton) with Hoist and Grapple (also including rails and supports) is designed to transport canisters (empty and loaded) to and from the Canister Storage Rack, place canisters into the Canister Loading Station and load canisters onto the Transportation Trailer. All canister handling operations will utilize the Overhead Bridge Crane.

3.2.4.2 The Overhead Bridge Crane with Hoist and Grapple will also be used for remote handling for maintenance/replacement of the following equipment: Bridge Robot with Telescoping Arm, Pick and Place Robot, Magazine Loading Station, Canister Loading Station and other racks, etc. located in cell areas. See Data Sheet No. M-DS-K-00085.

3.2.5 Magazine Loading Station

3.2.5.1 The Magazine Loading Station is designed to rotate and hold each magazine in a horizontal position while loading bagless cans and installing cap. The Loading Station repositions each magazine vertically for Bridge Robot Telescoping Arm engagement. See Data Sheet No. M-DS-K-00086.

3.2.6 Canister Loading Station

3.2.6.1 The Canister Loading Station is a structural base (See Drawing No. SK-DE-MLS-0001) designed to hold each canister while it is being scanned by a barcode reader, loaded with magazines and a temporary plug is installed. The Loading Station includes a remote display weigh scale. See Data Sheet No. J-JD-K-00042.

3.2.7 Bagless Can Lag Storage Rack

3.2.7.1 The Bagless Can Lag Storage Rack is designed to temporarily store 28 bagless cans (enough for one canister) prior to loading into magazines. See SK-DE-MLS-0001 for layout.

3.2.8 Empty Magazine Storage Rack

3.2.8.1 The Empty Magazine Storage Rack is designed to store 21 empty magazines and closure caps, enough for one week's supply. See SK-DE-MLS-0001 for layout.

3.2.9 Loaded Magazine Storage Rack

3.2.9.1 The Loaded Magazine Storage Rack is designed to store 180 loaded magazines. See SK-DE-MLS-0001 for layout.

3.2.10 Empty/Loaded Canister Storage Rack

3.2.10.1 The Empty/Loaded Canister Storage Rack is designed to store 12 canisters in any combination of empty and/or loaded canisters. See SK-DE-MLS-0001 for layout.

3.2.11 Bagless Can Storage Rack

3.2.11.1 The Bagless Can Storage Rack will be located on -14' level and will be designed for temporary storage of loaded bagless cans before transportation to 00' level to be loaded into magazines.

3.2.11.2 The Bagless Can Storage Rack will be designed to store a four months supply of loaded bagless cans in the case of a melter outage at DWPF.

3.2.12 Robotic Bridge Crane (Bagless Storage Room)

3.2.12.1 The Robotic Bridge Crane located in the Bagless Can Storage Room on -14' level will be designed to move bagless cans from a shielded cart to storage or to the dumbwaiter to 00' level or from storage to the dumbwaiter. It will also be capable of removing the top of the shielded cart so that the bagless cans can be removed. See M-DS-K-00165.

3.2.13 Torque Wrench

3.2.13.1 The Torque Wrench shall be designed to loosen and tighten ACME nuts to aid in removal and replacement of various stationary, remotely controlled equipment in the Can-In-Canister Loading, Storage and Transport System (See Data Sheet M-DS-K-00154).

3.3 Instrumentation and Controls

3.3.1 Process Controls

The Can-In-Canister Loading, Storage, and Transport System processors are defined below. Serial links from all of the processors listed below to the DCS I/O Cabinet ICS-CAB-110 will be provided by the vendor but wiring will be by SRS. ICS-CAB-110 can be expanded for direct I/O but none is planned at this time. Refer to the Attachment 1 - Bulk Electrical Materials for cable and conduit descriptions and quantities. Approximately 6 core drills will be needed for these installations. For details on wiring refer to Magazine Loading Control Block Diagram J-J8-K-00019

3.3.1.1 The main overhead bridge crane (see data sheet M-DS-K-00085) shall be wired to the canister area PLC in cabinet MLS-CAB-050 and locally controlled by console MLS-CNSL-050.

3.3.1.2 The canister loading bridge robot MLS-ROB-010 with telescoping arm (see data sheet M-DS-K-00087) shall be wired to the canister area PLC in cabinet MLS-CAB-050 and locally controlled by console MLS-CNSL-051.

3.3.1.3 The magazine loading station MLS-STAT-031 (see data sheet M-DS-K-00086)

including loading piston, table tilt, station index feeder, and Dumb Waiter MH-ELEV-002 (see data sheet M-DS-K-00103 and MH bulk take-off for wiring) shall be wired to the magazine loading station PLC in cabinet MLS-CAB-030 and locally controlled by console MLS-CNSL-030.

3.3.1.4 The pick and place robot MLS-ROB-020 (see data sheet M-DS-K-00084) shall be wired to the Magazine Loading Can Pick and Place Processor in cabinet MLS-CAB-020 and locally controlled by console MLS-CNSL-020.

3.3.1.5 The robotic bridge crane, MLS-CRN-001 and MLS-ROB-001 (see data sheet M-DS-K-00165) located in bagless can storage shall be wired to a processor in cabinet MLS-CAB-040 with associated console MLS-CNSL-040 located in the magazine loading control room.

3.3.1.6 A High BDER option of two process "Black" (i.e. unclassified) system barcode readers would put one in the canister loading area MLS-RDR-011 and one in the magazine loading area MLS-RDR-012. They would be similar to the barcode readers in the MC&A system described below and defined in data sheets J-JD-K-00066 and J-JD-K-00067 except that they would be black and would be wired to the DCS I/O cabinet ICS-CAB-110 serial I/O cards.

3.3.2 MC&A System

See the MC&A Control Block Diagram J-J8-K-00032 for details on Magazine Loading MC&A equipment and the Mechanical/Nuclear/Process section for description of major equipment in the magazine loading and canister loading areas. For details on the canister weighing scale MLS-SCL-001 see data sheet J-JD-K-00042. This scale shall be floor mounted in the Canister loading cell. There shall be a remote readout to be located in the control room in the Purification Wing. Cables and equipment associated with the MC&A system are designated as “Red” (i.e. classified) and will be installed per requirements of S-SRI-K-00005 (e.g. marking, separation). Also, cables and associated raceway will be labeled and inspected per project security plan documents. (See S-SOW-K-00002) For details on the canister barcode reader MLS-RDR-001 see data sheet J-JD-K-00066. For details on the magazine bar code reader MLS-RDR-002 see data sheet J-JD-K-00067.

3.4 Electrical

3.4.1 The Can-In-Canister Loading, Storage, and Transport System will contain the following major electrical components and services. The major electrical components will be provided as Engineered Equipment. This Scope of Work includes all raceway, power, control cables/terminations between field equipment and local controls and/or Purification Wing Control Room controls. Provide onsite setup and assembly of the referenced Engineered Equipment. Refer to Attachment 1 – Bulk Electrical Materials for cable and conduit descriptions and quantities (See Attachment 1). Approximately 20 core drills will be needed for these installations.

3.4.1.1 Can-In-Canister Remote Cameras and Viewing System, approx. 10 cameras, see Data Sheet No. E-DS-K-00020, Sketch No. SK-DE-MLS-0005, and drawing No. E-EB-K-00704. Cameras will be supplied with mounting brackets. Several cameras will be mounted on cranes. These cameras will be supplied to crane vendor with cabling specifications and designed into the crane cable/festoon systems. Several cameras will be wall mounted. Cameras in the Magazine Loading and Canister Loading Cells will be mounted on a special base with a bail for remote lifting/replacement. See conceptual details on sketch SK-DE-MLS-0006.

3.4.1.2 Electrical power distribution shall be as shown on single line drawing E-E2-K-02226. Existing Motor Control Center (MCC) 22E shall be refurbished and reconfigured as required to match the new design. This is located in Equipment Room in the Purification Wing. New feeders shall be routed to each new load as shown on this drawing.

3.4.1.3 Grounding shall include connection of all new permanent electrical equipment and/or skids to the existing ground grid system. This Scope of Work shall include approximately 10ft long pigtails with bolted terminations. Small movable equipment shall be grounded in accordance with code and/or industry practices.

3.5 Plant Design

3.5.1 No piping is associated with this Scope of Work.

3.6 Civil/Structural/Architectural

3.6.1 For structural and architectural modifications to the building structure including penetrations, penetration seals and core drills refer to C-SOW-K-00009

Follow manufacturer's recommendations for the support details of the following items:

- Pick and Place Robot
- Bridge Robot with Telescoping Arm (Above Cells)
- Crane with Hoist and Grapple
- Magazine Loading Station
- Robotic Bridge Crane (Bagless Storage Room)

See drawing SK-DE-MLS-0004 for structural details for the following items:

- Canister Loading Station
- Bagless Can Lag Storage Rack
- Can Storage Rack
- Empty Magazine Storage Rack
- Loaded Magazine Storage Rack
- Empty Canister Storage Rack
- Loaded Canister Storage Rack
- Bagless Can Storage Rack

For electrical equipment and instruments, see sketch No. SK-DE-MLS-0006.

3.6.2 Field to provide/install 1" thick carbon steel plate around each conduit inside cell areas. Also, around conduits and pull boxes located in bagless storage room. This is to provide radiation shielding for cables in these conduits. Refer to SK-DE-MLS-0006 for bulk material details.

4.0 ASSUMPTIONS

4.1 General Assumptions

4.1.1 The Construction Agency will be the SRS Construction Group. Design Services will provide engineering documentation for the installation of this equipment and will rely on the use of SRS Guides and Standards.

4.1.2 SRS Construction Group will procure all bulk materials.

4.1.3 SRS Construction Group will procure all off-the-shelf components and equipment identified on engineering data sheets that do not require testing or quality documentation.

4.2 Specific Assumptions

4.2.1 Mechanical

4.2.1.1 The existing bridge crane (Including rails) in the purification wing of KAC will be replaced.

4.2.1.2 The Transportation Trailer belongs to the Material Handling System scope (Refer to M-SOW-K-00027).

4.2.1.3 The existing DWPF grapple is the basis for the estimate.

4.2.1.4 The existing KAC truck bay shield door is assumed to be operational. No cost will be incurred by PUD.

4.2.2 Instrumentation and Controls

4.2.2.1 Construction scope includes initial calibration of instruments installed per this SOW.

4.2.2.2 No radiation resistant (hardened) cables required

4.2.3 Electrical

4.2.3.1 No Hanford type connectors or jumpers will be required, refer to SK-DE-MLS-0006.

4.2.3.2 Existing grounding grid is intact and adequate for grounding of new equipment.

4.2.3.3 Existing Public Address system in Purification Wing can be restored to service with minimal work and connected/made compatible with new Public Address system being provided in KAC by PUD project. Refer to E-EF-K-02088, note 4.

4.2.3.4 Engineered Equipment will include all hardware and (interconnect) cabling necessary for onsite assembly of equipment installed on vendor skid (or shipping splits disassembled at factory to ease shipping). Terminations will utilize vendor assembled connectors or detailed wiring/connection drawings will be provided. Interface cables to customer power (utility) connections and/or remote control functions will be specified by vendor and furnished by the field.

4.2.3.5 Cranes and robotic equipment that utilize cable reels and/or festoon systems shall be supplied with the required cables and connectors.

4.2.3.6 No radiation resistant (hardened) cables required.

4.2.4 Plant Design

4.2.4.1 No specific assumptions have been made in this group.

4.2.5 Civil/Structural/Architectural

4.2.5.1 4” core drills can be made through the floor of each cell, cutting rebar as

required. This is to allow installation of 3" riser conduits.

4.2.5.2 Assume all anchor bolts used for equipment and commodity supports will be A36 Drillco Maxi Bolts.

4.2.5.3 Assume the Functional Classification for drilling holes in concrete surface is SC.

4.2.5.4 For electrical conduits and equipment supports, use cookbook No. C-CI-G-0039.

4.3 High Business Decision Estimate Range (BDER)

4.3.1 Barcode readers designed specifically for product tracking, product selection and in-process inventory will be part of the High BDER scope. Currently, it is assumed that the MC&A barcode readers mentioned in Section 3.3.2 will also be used to accomplish these tasks.

4.4 Maintenance Strategy

4.4.1 Maintenance and replacement of equipment for Can-In-Canister Loading, Storage and Transport will be by remote removal to shielded/isolate area (outside cells). No one is planned to enter the Magazine Loading or Canister Loading cells during normal operation, therefore all equipment in these areas will be designed for remote removal for maintenance and replacement (Refer to M-ESR-K-00017).

5.0 TECHNOLOGY DEVELOPMENT ISSUES

5.1 The Pick and Place Robot design concept for magazine loading has not been developed and will need development and proof of concept for the PUD project.

5.2 The Bridge Robot with Telescoping Arm design concept for canister loading has not been developed and will need development and proof of concept for the PUD project.

6.0 REFERENCES

6.1 Drawing List

6.1.1 PUD Project Drawings & Sketches

6.1.1.1 E-DS-K-00020 – Magazine Loading and Storage Camera System

6.1.1.2 E-E2-K-02226 – Magazine Loading/Storage – Single Line

6.1.1.3 E-EB-K-00704 – Magazine Loading/Storage Viewing System Block Flow Diagram

6.1.1.4 J-J8-K-00019 – Magazine Loading/Storage Material Handling System Control Block Diagram

6.1.1.5 J-J8-K-00034 – Magazine Loading MC&A Block Diagram

6.1.1.6 J-JD-K-00042 – Data Sheet for Canister Weigh Scale

6.1.1.7 J-JD-K-00066 – Data Sheet for Magazine Loading Barcode Reader No. 1

6.1.1.8 J-JD-K-00067 – Data Sheet for Magazine Loading Barcode Reader No. 2

6.1.1.9 M-DS-K-00084 – Data Sheet for Pick and Place Robot

6.1.1.10 M-DS-K-00085 – Data Sheet for Crane with Hoist and Grapple

6.1.1.11 M-DS-K-00086 – Data Sheet for Magazine Loading Station

6.1.1.12 M-DS-K-00087 – Data Sheet for Robot with Telescoping Arm

6.1.1.13 M-DS-K-00154 – Data Sheet for Torque Wrench

6.1.1.14 M-DS-K-00165 – Data Sheet for Robotic Bridge Crane

6.1.1.15 M-M8-K-00009 – Magazine Loading/Storage, Canister Loading/Transport Block Flow Diagram

6.1.1.16 SK-DE-MLS-0001 – Magazine & Canister Loading Layout, Plan, and Sections

6.1.1.17 SK-DE-MLS-0002 – Magazine Loading/Storage Floor Plan at Elev. -14’-0” and Floor Plan at Elev. 0’-0”

6.1.1.18 SK-DE-MLS-0003 – Magazine Loading/Storage Floor Plan at Elev. +21’-0” and Floor Plan at Elev. +30’-0”

6.1.1.19 SK-DE-MLS-0004 – Magazine Loading/Storage Rack Design, Sections and Details

6.1.1.20 SK-DE-MLS-0005 – Magazine Loading/Canister Loading, Electrical, and I&C Layout

6.1.1.21 SK-DE-MLS-0006 – Magazine Loading/Canister Loading Layout, Electrical Raceway, and Radiation Shielding

6.1.2 Existing Savannah River Site (SRS) Drawings

6.1.2.1 C-CM-H-07056 – CBU-Salt Processing Program Actinide Removal Process 4500# Lifting Yoke for Agitators, Pumps & Cooling Coils

6.1.2.2 C-CM-H-07057 – CBU-Salt Processing Program Actinide Removal Process 1/2 Ton Lifting Yoke for O-Ring Gasket Flange

6.1.2.3 W144532 – Purification Area Basement Plan, Power & Instrumentation

6.1.2.4 W144533 – Purification Area First Floor Plan, Power & Installation

6.1.2.5 W752550 – Details of ACME Stud, ACME Nut, Dowel Pin, and Trunnion

6.1.2.6 W752199 – Details of 3” Conn. Nozzle, Nut Ret./Dutchman, Vessel Agitator

6.2 Design Input Documents

The following Facility Design Description and System Design Descriptions are the baseline documents used to develop this SOW.

6.2.1 Facility Design Description

6.2.1.1 G-FDD-K-00001, Rev: B, “PUV Facility Design Description”

6.2.2 System Design Description

6.2.2.1 M-SYD-K-00002, Rev: B, “Can-In-Canister Loading, Storage, and Transport System (MLS) SDD”

6.2.3 Safeguards and Security Requirements Identification document

6.2.3.1 S-SRI-K-00005, Rev: 0, KAC Safeguards and Security Requirements Identification Document for Plutonium Disposition.

6.2.4 Maintenance Strategy

6.2.4.1 M-ESR-K-00017, Rev: 0, “Plutonium Disposition Facility Maintenance and Replacement Strategy”.

6.3 Applicable SRS & Industry Codes, Guides and Standards

6.3.1 Industry Codes and Standards

6.3.1.1 NFPA 801, Standard for Fire Protection for Facilities Handling Radioactive Materials, February 6, 2003

6.3.2 SRS Guides & Standards

6.3.2.1 WSRC-IM-95-58, Standard 03252-G, Rev: 1, Installation and Testing of Concrete Anchors, December 19, 2005

6.3.2.2 WSRC-IM-95-58, Standard 15980-G, Rev: 3, Installation and Calibration of Instruments July 16, 2004

6.3.2.3 WSRC-IM-95-58, Standard 16051-G, Rev: 2, Installation of Electrical Raceway Systems and Cable Trays April 24, 2003

6.3.2.4 WSRC-IM-95-58, Standard 16052-G, Rev: 3, Installation of Electrical Wires, Cables and Terminations August 15, 2005

6.3.2.5 WSRC-IM-95-58, Standard 16053-G, Rev: 2, Installation of Electrical Equipment February 12, 2004

6.3.2.6 WSRC-IM-95-58, Standard 16056-G, Rev: 2, Installation of Grounding Systems August 19, 2003

6.3.2.7 WSRC-TM-95-1, Standard 03010, Rev: 1, Coring, Chipping, and Drilling in Concrete, December 19, 2005

6.3.3 DOE Orders & Standards

6.3.3.1 DOE Manual 470.4-6, Rev: Chg.1, Nuclear Materials Control and Accountability, August 14, 2006

6.3.3.2 DOE/RW-0333P, Rev: 17, Quality Assurance Requirements and Description, 5/8/2006

6.4 Related Scopes of Work (SOW)

6.4.1 M-SOW-K-00015, Bagless Transfer System – This related SOW provides information on the bagless cans which will be provided as input to the Magazine Loading System.

6.4.2 E-SOW-K-00017, Electrical Power Supply System – This related SOW provides information on the electrical power supply for all systems. Electrical power is supplied to main electrical distribution equipment, which is utilized to service process and BOP equipment electrical needs.

6.4.3 C-SOW-K-00009, Structural & Architectural Mods for Process Building

6.4.4 J-SOW-K-00002, Integrated Control System – This related SOW provides the interface to (automated) process control systems and/or MC&A network equipment included associated with this work scope.

6.4.5 M-SOW-K-00027, Material Handling System – This related SOW provides details on how material is transported between systems.

6.4.6 S-SOW-K-00002, Safeguards and Securities – This related SOW provides details on safeguard and security measures being implemented for each of the systems.

6.5 Miscellaneous

6.5.1 C-CI-G-0039, Rev: 0, Electrical Conduit and Equipment Supports, February 9, 2005.

6.5.2 WSRC-TR-06-0043, Rev: 0, Plutonium Vitrification Facility Consolidated Hazard Analysis, January 2007.

7.0 ATTACHMENTS

Attachment 1. Bulk Electrical Materials

Attachment 2. Bulk C/S/A Materials

Attachment 1. Bulk Electrical Materials

CABLE AND RACEWAY ESTIMATE TOTALS

Cable Quantities

Cable Size/Type	Total (ft)
1-3/c#10 w/1-#12gnd	1,020
1-3/c#4/0 w/1-#6gnd	160
1-3/c#6 w/1-#8gnd	50
1-3/c#2 w/1-#6gnd	20
36/c #16	640
16/c #16	300
1/c#12	2,730
#4/0	300
#6	20
3/c #18	320
3/c #19	160
Grand Total	5,720

All Raceway Types and Quantities
Grouped by Red Designation

Red	RCWY	Total (ft)
N	3/4" IMC	1,130
	3" IMC	430
	1" IMC	40
	2" IMC	780
	1 1/2" IMC	140
Y*	3/4" IMC	450
Grand Total		2,970

* Red conduit contains wiring for classified systems, and installation and support is more difficult than for “black”, unclassified wiring systems.

CABLE AND RACEWAY ESTIMATES BY EQUIPMENT

Item #	From Equipment	To Equipment	Cable Estimates			Raceway Estimates				
			Length (ft)	Qty	Cable size/description	Length (ft)	Qty	Size/Desc.	Red	Notes/Comments
1	MCC-22E	Truck bay roll-up door motor	170	1	1-3/c#10 w/1-#12gnd	160	1	3/4" IMC	N	
2	MCC-22E	Pick & Place Robot in Mag Loading cell	160	1	1-3/c#10 w/1-#12gnd	150	1	3/4" IMC	N	
3	MCC-22E	Magazine Loading Station in Mag Loading cell	160	1	1-3/c#10 w/1-#12gnd	150	1	3/4" IMC	N	
4	MCC-22E	Material Lift Platform (Elv -20 to -14)	210	1	1-3/c#10 w/1-#12gnd	200	1	3/4" IMC	N	
5	MCC-22E	Bridge Crane/robot arm in Bagless Storage Room	160	1	1-3/c#10 w/1-#12gnd	170	1	3/4" IMC	N	
6	MCC-22E	Bridge Crane w/Hoist & Grapple in Purification Wing	160	1	1-3/c#4/0 w/1-#6gnd	150	1	3" IMC	N	
7	MCC-22E	Canister Loading Station in Canister Loading cell	160	1	1-3/c#10 w/1-#12gnd	150	1	3/4" IMC	N	

Item #	From Equipment	To Equipment	Cable Estimates			Raceway Estimates				
			Length (ft)	Qty	Cable size/description	Length (ft)	Qty	Size/Desc.	Red	Notes/Comments
8	MCC-22E	New Power Transformer in Purification Wing Electrical Room	50	1	1-3/c#6 w/1-#8gnd	40	1	1" IMC	N	
9	New Power Transformer in Purification Wing Electrical Room	New Power Panel in Purification Wing Electrical Room	20	1	1-3/c#2 w/1-#6gnd	30	1	2" IMC	N	
10	New Power Panel in Purification Wing Electrical Room	(2) duplex receptacles at/on Bridge Crane with Hoist/Grapple	160	3	1/c#12	150	1	3/4" IMC	N	Dedicated receptacles on crane (Hot, Neut, Gnd)
11	New Power Panel in Purification Wing Electrical Room	(5ea) Duplex receptacles in Purification Wing Control Room	150	15	1/c#12	140	1	1 1/2" IMC	N	Dedicated receptacles for control panels (Hot, Neut, Gnd)
12	New Control Station in Existing Control Room, Purification Wing	Bridge Crane w/Hoist & Grapple in Purification Wing	320	1	36/c #16	300	1	2" IMC	N	

Item #	From Equipment	To Equipment	Cable Estimates			Raceway Estimates				
			Length (ft)	Qty	Cable size/description	Length (ft)	Qty	Size/Desc.	Red	Notes/Comments
13	New Control Station in Existing Control Room, Purification Wing	Pick & Place Robot in Mag Loading cell	160	1	36/c #16	150	1	2" IMC	N	
14	New Control Station in Existing Control Room, Purification Wing	Magazine Loading Station in Mag Loading cell	160	1	36/c #16	150	1	2" IMC	N	
15	New Control Station in Existing Control Room, Purification Wing	Bridge Crane/robot arm in Bagless Storage Room	160	1	16/c #16	150	1	2" IMC	N	
16	New Control Station in Existing Control Room, Purification Wing	Canister Loading Station in Canister Loading cell	140	1	16/c #16	130	1	2" IMC	N	
17	Magazine and Canister Loading Cells	Magazine and Canister Loading Cells	0	0	see comments	10	15	3" IMC	N	Riser conduits into cell through coredrills
18	Equipment	Ground Grid	300	1	#4/0	0	0	0	N	Grounding
19	Equipment	Ground Grid	20	1	#6	0	0	0	N	Grounding

Item #	From Equipment	To Equipment	Cable Estimates			Raceway Estimates				
			Length (ft)	Qty	Cable size/description	Length (ft)	Qty	Size/Desc.	Red	Notes/Comments
20	Bar code reader MLS-RDR-001 in Mag Loading cell	New I/O Cabinet in Existing Control Room, Purification Wing	160	1	3/c #18	150	1	3/4" IMC	Y	Red circuit, requires separation
21	Bar code reader MLS-RDR-002 in Canister Loading cell	New I/O Cabinet in Existing Control Room, Purification Wing	160	1	3/c #18	150	1	3/4" IMC	Y	Red circuit, requires separation
22	Weigh Scale in Canister Loading	New I/O Cabinet in Existing Control Room, Purification Wing	160	1	3/c #19	150	1	3/4" IMC	Y	Red circuit, requires separation

Attachment 2. Bulk C/S/A Materials

B-Block	System	Material Type	Document #	Estimated Quantity
Magazine & CIC Loading	Pick & Place Robot	3/4" Dia. A36 Maxi Bolts	M-DS-K-00084	4
		A36 1/2" plate (4' X 4')	M-DS-K-00084	1
		ACME Nut	W752550	8
		ACME Stud	W752550	8
		Dutchman	W752199	8
		Master Dowel Pin	W752550	1
		Slave Dowel Pin	W752550	1
	Bridge Robot W/Telescoping Arm	N/A	M-DS-K-00087	N/A
	Overhead Bridge Crane with Hoist & Grapple	1" Dia. A36 Maxi Bolts	M-DS-K-00085	232
		A36 3/4" plate (1'-4" X 1'-4")	M-DS-K-00085	58
	Magazine Loading Station	3/4" Dia. A36 Maxi Bolts	M-DS-K-00086	16
		A36 3/4" plate (1' X 1')	M-DS-K-00086	4
		ACME Nut	W752550	4
		ACME Stud	W752550	4
		Dutchman	W752199	4
		Master Dowel Pin	W752550	1
		Slave Dowel Pin	W752550	1
	Robotic Bridge Crane	3/4" Dia. A36 Maxi Bolts	M-DS-K-00165	120
		A36 3/4" plate (1' X 1')	M-DS-K-00165	30

B-Block	System	Material Type	Document #	Estimated Quantity
Magazine & CIC Loading	Bagless Can Lag Storage Rack	Miscellaneous steel	SK-DE-MLS-0001 & SK-DE-MLS-0004	Use referenced documents for material take off
	Empty Magazine Storage Rack	Miscellaneous steel	SK-DE-MLS-0001 & SK-DE-MLS-0004	Use referenced documents for material take off
	Loaded Magazine Storage Rack	Miscellaneous steel	SK-DE-MLS-0001 & SK-DE-MLS-0004	Use referenced documents for material take off
	Bagless Can Storage Rack	Miscellaneous steel	SK-DE-MLS-0001 & SK-DE-MLS-0004	Use referenced documents for material take off
	Electrical Components Supports	1" A36 steel plate for shielding	SK-DE-MLS-0006	Use referenced documents for material take off
	Scale	3/4" Dia. A36 Maxi Bolts	SK-DE-MLS-0006	4
		A36 1/2” plate (4' X 4')	SK-DE-MLS-0006	1
		ACME Nut	W752550	4
		ACME Stud	W752550	4
		Dutchman	W752199	4
		Master Dowel Pin	W752550	1
		Slave Dowel Pin	W752550	1

B-Block	System	Material Type	Document #	Estimated Quantity
Magazine & CIC Loading	Cameras (9)	1/2" Dia. A36 Maxi Bolts	SK-DE-MLS-0005	36
		A36 1/2" plate (1' X 1')	SK-DE-MLS-0005	9
		ACME Nut	W752550	9
		ACME Stud	W752550	9
		Dutchman	W752199	9
		Master Dowel Pin	W752550	9
		Slave Dowel Pin	W752550	9
	Barcode Readers (2)	1/2” Dia. A36 Maxi Bolts		8
		A36 1/2” plate (1’ X 1’)		2
		ACME Nut	W752550	2
		ACME Stud	W752550	2
		Dutchman	W752199	2
		Master Dowel Pin	W752550	2
		Slave Dowel Pin	W752550	2
	Lifting Yokes (3)			
	Capacity: Less than 2 tons	A36 Steel	C-CM-H-07056	1
	Capacity: Less than 1 ton	A36 Steel	C-CM-H-07057	1
	Capacity: Less than 100 lb	A36 Steel	C-CM-H-07057	1

PLUTONIUM DISPOSITION PROJECT (U)

Project M09A

SCOPE OF WORK

M-SOW-K-00019 Revision 0

for

Oxidation System (U)

Originated by: EC Tefft III Date: 3/26/07
Edward Tefft
Senior Mechanical/Process Engineer

Reviewed by: N. Shanmuganathan Date: 3/27/2007
Nathan Shanmuganathan
Principal Process Engineer

Approved by: Clayton Holloway Date: 3/28/07
Clayton Holloway
Mechanical Lead

Approved by: Roderick King Date: 3/27/07
Roderick King
Electrical/I&C Lead

Approved by: Ghada S. Elchoufi Date: 3/28/2007
Ghada Elchoufi
C/S/A Lead

Approved by: Date: 3-28-07
Drew Negus
Plant Design Lead

Approved by: John Hammond Date: 3-28-07
John Hammond
Construction Lead

Approved by: D. P. Randall FOR Date: 27 MAR 07
William Randall
Design Authority

Approved by: B.C. Patel Date: 3/28/07.
B.C. Patel
Project Engineer

UNCLASSIFIED
DOES NOT CONTAIN UNCLASSIFIED CONTROLLED NUCLEAR INFORMATION
DC/RO: EC Tefft III 3/26/07

Revision Page

Revision	Revision Date	Affected Section	Description of Change
0	3/28/07	N/A	Initial Issue

Table of Contents

Section Page

1.0 SCOPE 4
1.1 General Description 4
1.2 Background 4
2.0 ACRONYMS/ABBREVIATIONS 4
3.0 DESCRIPTION OF PHYSICAL WORK 5
3.1 Performance Category and Functional Classification (SC, SS, PS, GS) 5
3.2 Mechanical/Nuclear/Process 5
3.3 Instrumentation and Controls 9
3.4 Electrical 12
3.5 Plant Design 12
3.6 Civil/Structural/Architectural 12
4.0 ASSUMPTIONS 14
4.1 General Assumptions 14
4.2 Specific Assumptions 14
4.3 HBDER Scope 15
5.0 REFERENCES 15
5.1 Drawing List 15
5.2 Design Input Documents 17
5.3 Applicable SRS & Industry Codes, Guides and Standards 17
5.4 Related Scopes of Work (SOW) 18
5.5 Miscellaneous 18
6.0 ATTACHMENTS 18
6.1 Attachment 1, Bulk Material List, Piping/valves 18
6.2 Attachment 2, C/S/A Bulk Material List 18
6.3 Attachment 3, Electrical Bulk Material List 18
6.4 Oxidation Room 3D Room Layout Drawing 18

1.0 SCOPE

1.1 General Description

This Scope of Work (SOW) Covers the Oxidation System for the Plutonium Disposition Project. The Oxidation System receives 3013 containers containing plutonium metal from the Material Receipt and Storage System. In the Oxidation System the 3013 containers are opened, and plutonium metal is loaded into a Direct Metal Oxidation (DMO) Furnace where it is converted to plutonium oxide. Two DMO Furnaces will be required to obtain the throughput requirement. The plutonium oxide output from Oxidation is in transport cans which are weighed, scanned by a Gamma isotopic Scanner (GIS) and Passive Neutron Multiplicity Counter (PNMC). The completed transport cans are conveyed in the Material Handling System transport tunnels to the Feed Preparation System.

1.2 Background

The Office of Environmental Management has approximately 13 metric tons (MT) of plutonium in approximately 21 MT bulk materials without any defined disposition path. The Plutonium Disposition (PUD) Project is critical to meet the Department of Energy's strategic goal of providing a responsible resolution to the permanent disposal of the nation's excess high-level radioactive materials and waste; and to enable the cleanup of Environmental Management sites.

The Plutonium Disposition Facility (PDF) will be located at the K-Area Complex (KAC) to disposition up to approximately 13 Metric Tons (MT) of Environmental Management (EM) owned surplus plutonium. The facility will utilize a vitrification process to vitrify plutonium into a lanthanide borosilicate (LaBS) glass matrix. This glass will be packaged into bagless transfer cans and placed inside a Defense Waste Processing Facility (DWPF) type canister. The canister will be transported to DWPF and filled with High Level Waste (HLW) glass. The DWPF canisters will be stored in the Glass Waste Storage Buildings and later transported to the geologic repository at Yucca Mountain.

This Scope of Work (SOW) has been developed for the purpose of facilitating **construction** cost and schedule estimates for the Conceptual Design Report (CDR) on the PUD project. The input to this SOW was the approved technical baseline consisting of a Facility Design Description (FDD) and associated System Design Descriptions (SDD). Every intent has been made to assure alignment and consistency between this SOW and the appropriate sections of the technical baseline, in order to provide accurate estimates. This SOW is not a PUD technical baseline document. A more detailed description of the system can be found in the associated SDD listed in the reference section.

A **HOLD** is placed to identify information that is preliminary in nature, results from a design uncertainty, originates from insufficient documentation, needs verification, or identifies a discrepancy. A **TBD** is placed to identify places in the text where numeric values or descriptive information is not available at the time that the current revision of the SOW is released.

2.0 ACRONYMS/ABBREVIATIONS

AC	Alternating Current
CCTV	Closed Circuit Television
C/S/A	Civil/Structural/Architectural
DMO	Direct Metal Oxidation

DS	Design Services
DWPF	Defense Waste Processing Facility
EM	Environmental Management
EMT	Electrical Metallic Conduit
GS	General Services
HBDER	High Business Design Estimate Range
HEPA	High-Efficiency Particulate Air (filter)
HVAC	Heating, Ventilation and Air Conditioning
ICS	Integrated Control System
IMC	Inter Metallic Conduit
I/O	Input/Output
KAC	K-Area Complex
LaBS	Lanthanide Borosilicate
MC&A	Material Control and Accountability
NFPA	National Fire Protection Association
OCS	Operator Control Station
PC	Performance Category
PNMC	Passive Neutron Multiplicity Counter
PS	Production Support
Pt/Rh	Platinum/Rhodium
PU	Plutonium
PUD	Plutonium Disposition
PuVit	Plutonium Vitrification
SC	Safety Class
SDD	System Design Description
SOW	Scope Of Work
SRID	Safeguards and Security Requirements Identification Document
SRS	Savannah River Site
SS	Safety Significant
TBD	To Be Determined
UNO	Unless Noted Otherwise
VAC	Volts, Alternating Current
WSRC	Washington Savannah River Company

3.0 DESCRIPTION OF PHYSICAL WORK

3.1 Performance Category and Functional Classification (SC, SS, PS, GS)

3.1.1 Performance Category

3.1.1.1 The Oxidation System is Performance Category PC-1. **HOLD**. (Reference X-SYD-K-00003).

3.1.2 Functional Classification

3.1.2.1 All systems and equipment in this SOW shall be designed in accordance with the requirements of WSRC Manual WSRC-E7, Conduct of Engineering and Technical Support Procedure 2.25 Rev 14, “Functional Classification”, having a Functional Classification of Production Support (PS) (Reference X-SYD-K-00003):

3.2 Mechanical/Nuclear/Process

The Oxidation System is contained in one glovebox system comprised of five gloveboxes: Material in 3013 containers is introduced into the Material Entry & Prep

Glovebox where the outer 3013 can is removed. The material then is passed through an airlock to the Furnace Prep Glovebox where the inner 3013 can is opened and a furnace basket is loaded with Pu metal. The furnace basket is then transferred to one of two Furnace Gloveboxes and introduced into a furnace. After the Pu metal is converted to an oxide in a furnace, the oxide is transferred to a transport can. The transport can is transferred through an airlock to the Exit Staging Glovebox where Material Control and Accountability (MC&A) functions are performed. An overview of the Oxidation process is provided in block flow diagram M-M8-K-00005. Material movement through the process is summarized in block flow diagram M-M8-K-00016.

3.2.1 Oxidation Glovebox Components

3.2.1.1 The following Oxidation process components will be contained within the Oxidation Glovebox system. Reference sketch SK-DE-DMO-0001 for layout and location of components in the glovebox.The major components are:

A. DMO Furnace (2 ea.)

1. Details of the furnace are in Data Sheet M-DS-K-00072. The furnace has a removable basket which is loaded with Pu metal. The furnace is equipped with a motor that rotates the basket to tumble the Pu metal while it is heated. The Pu Oxide collects in the bottom of the furnace where it is transferred by dustless valve to a transport can. **HOLD.**

B. Argon Blower (2 ea.)

1. Details of the argon blowers are in Data Sheet M-DS-K-00072. The blowers provide cooling to the furnaces at the end of an oxidation run.

C. Vacuum pump (3 ea.)

1. Details of the vacuum pumps are in Data Sheet M-DS-K-00072 and two pumps maintain the DMO furnace at sub-atmospheric pressure during oxidation runs. A similar third vacuum pump is used to evacuate glovebox airlocks when these airlocks are being purged with argon (Ref. M-M6-K-02268).

D. Can Cutter (2 ea.)

1. Details of the can cutter are in Data Sheet M-DS-K-00071. One can cutter is to be used to open the Outer 3013 container. The second can cutter is for opening the Inner 3013 container and convenience cans which cannot be opened manually.

E. Convenience can opener (1 ea.)

1. The convenience can opener (Equip. No. DMO-COP-0001) consists of a vise mounted to the glovebox work surface and some customized wrenches (3 to 4 ea.) to fit the convenience can tops.

F. Furnace Basket Dumping Station (1 ea.)

1. Conceptual details of the furnace basket dumping station are in Data Sheet M-DS-K-00153. The manually operated station will transfer Pu metal from a 3013 container or convenience can to the furnace basket. **HOLD.**

G. Gantry Hoist (3 ea)

1. Details of the Gantry Hoist are in Data Sheet M-DS-K-00109. The hoist will be used for moving containers inside the gloveboxes.

H. Basket Hoist (2 ea)

1. Details of the basket Hoist are in Data Sheet M-DS-K-00110. The Basket Hoist will be used to install and remove furnace baskets from the furnace. **HOLD.**

I. Can Cart (2 ea)

1. Details of the Can Cart are in Data Sheet M-DS-00111. The Can Cart is used to move transport containers and baskets from the Furnace Prep Glovebox to the Furnace Gloveboxes.

J. Glovebox Atmosphere Regeneration Unit (1 ea.)

1. Details of the Glovebox Atmosphere Regeneration Unit are in Data Sheet M-DS-K-00074. The Regeneration Unit will purify the glovebox argon atmosphere removing excess moisture and oxygen. A vacuum pump is part of the Regeneration Unit.

K. Cooling Coil (1 ea.)

1. A chilled water cooling coil (Equip. No. DMO-CCL-001) will be required to cool the glovebox atmosphere (Ref. M-M5-K-01944 and M-M6-K-02267).

L. Blower (1 ea.)

1. A blower (Equip. No. DMO-BLO-003) will be required to circulate glovebox argon atmosphere through the cooling coil (Ref. M-M5-K-01944 and M-M6-K-02267).

H. For Piping and valves bulk material for inside the Oxidation glovebox see Attachment 1. Piping exterior to the glovebox is covered in other scopes of work.

3.2.2 Gloveboxes

See M-SPP-K-00059 for general glovebox requirements. Oxidation Gloveboxes dimensions and layout are shown in drawing SK-DE-DMO-0001.

3.2.2.1 Material Entry & Prep Glovebox and Exit Staging Glovebox-The Material Entry & Prep Glovebox atmosphere is room air. The Exit Staging glovebox atmosphere is dry air. These gloveboxes are equipped with shielding to reduce the radiation dose to collocated workers and maintenance personnel.

These gloveboxes are ventilated with room air and dry air which is drawn through an inlet HEPA filter and exhausted through additional HEPA filters to the Glovebox Exhaust System. See drawings M-M5-K-01943 and M-M6-K-02266 for glovebox exhaust flow diagram and piping and instrumentation diagram.

A. HEPA filters in stainless steel housing. (3 ea.)

B. Non-testable HEPA filter mounted to skin of glovebox. (2 ea.).

C. 10” automatic damper, pneumatically operated, stainless (1 ea.)

D. 4” isolation dampers, stainless (6 ea.)

E. 4” balancing damper, stainless (2 ea.)

F. ¼” three-way ball valves, stainless (12 ea.)

G. 10” isolation damper, stainless (5 ea.)

H. 6” balancing damper (1 ea.)

I. 6” isolation damper (2 ea.)

3.2.2.2 Furnace Prep and Furnace Gloveboxes- These gloveboxes are connected to the Material Entry & Prep glovebox and the Exit Staging Glovebox by airlocks. These glovebox’s atmosphere is argon. These gloveboxes are equipped with shielding to reduce the radiation dose to collocated workers and maintenance personnel.

A removable maintenance panel is provided to replace the entire furnace assembly in the event of a failure of the furnace (e.g. furnace vessel leakage). (Ref. M-ESR-K-00017). The maintenance concept is to have the furnace assembly mounted on rails in the glovebox and to be easily removable/replaceable manually.

These gloveboxes are ventilated with recirculating argon. The argon is circulated through a Glovebox Atmosphere Regen. Unit. See drawings M-M5-K-01945 and M-M6-K-02268 for the inert atmosphere flow diagram and piping and instrumentation diagram.

A. HEPA filters in stainless steel housing. (2 ea.)

B. Non-testable HEPA filter mounted to skin of glovebox. (3 ea.).

C. 3/4” isolation dampers (ball valve), stainless (3 ea.)

D. 1/4” ball valves, stainless (5 ea.)

E. ¼” three-way ball valves, stainless (12 ea.)

F. 1” ball valves, stainless (6 ea.)

G. 1” balancing damper (1” butterfly valve), stainless (3 ea.)

H. ¼” inline stainless filter (Swagelok) (1 ea.)

The Furnace Gloveboxes are cooled by circulating the inert atmosphere through a blower and cooling coil. Cooling water is supplied to the cooling coil and to the furnace. See drawings M-M5-K-01944 and M-M6-K-02267 for the Glovebox/Furnace Cooling flow diagram and piping and instrumentation diagram.

I. Non-testable HEPA filter mounted to skin of glovebox. (2 ea.).

J. 1” isolation gate valves, stainless (10 ea.)

K. ¼” three-way ball valves, stainless (4 ea.)

L. ½” gate valves, stainless (4 ea.)

M. 1” chilled water circuit setter valve, stainless (2 ea.)

N. 1” chilled water 3-way control valve (stainless) (1 ea.)

O. 4” isolation dampers (butterfly valves) (2 ea.)

3.2.2.3 The furnaces have associated valving and filters due to connections to gas utilities and vacuum pumps. See drawings M-M5-K-01942 and M-M6-K-02270 for the Oxygen Feed and Offgas Exhaust flow diagram and piping and instrumentation diagram.

A. ½” Swagelok filter (stainless) (4 ea.).

B. ½” globe valves, stainless (8 ea.)

C. ½” automatic globe valve, air actuated, stainless (4 ea.)

D. 12” X 12” filter housing for blowers, stainless (2 ea.)

E. 1” Swagelok filter (stainless) (2 ea.)

F. 1” globe valve stainless (2 ea.)

3.2.3 Piping

3.2.3.1 Piping material is designated by a “P-spec” designation from SRS Document WSRC-IM-95-58, Guide No. 15060. The piping material will be welded or utilize flange fittings.

3.3 Instrumentation and Controls

The Oxidation System defined in P&ID's M-M6-K-02266, M-M6-K-02267, M-M6-K-02268, and M-M6-K-02270, consists of a Furnace Prep Glovebox with entry and exit gloveboxes and two furnaces, each in a glovebox, with supporting equipment. Controls are defined in the Oxidation Control Block Diagram J-J8-K-00020 and Logic J-J2-K-01552. For Cable and raceway estimated bulk quantities refer to Attachment 3.

Instrument Cabinet DMO-INST-100 (1 ea.) will be used to house transmitters associated with the following equipment:

3.3.1 The following controls equipment is associated with the two furnaces:

3.3.1.1 Furnace Gloveboxes GBS-GB-001C and GBS-GB-001D as defined in Data Sheet M-DS-K-00072 and P&ID M-M6-K-02270 involve the following control interfaces:

A. (2 ea.) Motor control for driving the furnace basket tumblers (DMO-FURN-001 and DMO-FURN-002)
B. (2 ea.) Temperature control loop (thermocouple and heater) , housed in two (2 ea.) control cabinets DMO-CONT-001 and -002)
C. (2 ea.) Relay cabinets (DMO-CAB-001 and -002)

3.3.1.2 Furnace Argon Purge as defined in P&ID M-M6-K-02270 includes the following controls:

A. (2 ea.) Flow element, transmitter, and control valve
B. (2 ea.) Valve control with Limit Switches

3.3.1.3 Furnace Oxygen/Helium as defined in P&ID M-M6-K-02270 includes the following controls:

A. (2 ea.) Flow element, transmitter, and control valve
B. (2 ea.) Hand Valve with Limit Switches

3.3.1.4 Glovebox Inert Atmosphere as defined in P&ID M-M6-K-02268 includes the following controls:

A. (2 ea.) Moisture element and transmitter
B. (2 ea.) Temperature element and transmitter
C. (2 ea.) Oxygen sensor and transmitter
D. (2 ea.) Pressure Differential Indicator (PDI) for filters.

3.3.1.5 Furnace Cooling as defined in P&ID M-M6-K-02267 includes the following controls:

A. (2 ea.) Temperature element and transmitter
B. (2 ea.) Flow element and transmitter
C. (2 ea.) PDI for filters.

3.3.1.6 Furnace Exhaust as defined in P&ID M-M6-K-02270 includes the following controls:

A. (2 ea.) PDI for filters.
B. (2 ea.) Hand Valve with limit switches
C. (2 ea.) Pump with run and status controls

3.3.1.7 Furnace Atmospheric Blower as defined in P&ID M-M6-K-02270 includes the following controls:

A. (2 ea.) Blower control (run and status)

3.3.2 The Oxidation Gloveboxes will contain the following:

3.3.2.1 Cooling Water System - see Chilled Water Scope of Work No. M-SOW-K-00022 and Milling and Mixing and Oxidation Heat Exchanger P&ID M-M6-K-02291. The system and equipment are not part of the Oxidation Scope of Work.

3.3.2.2 Material Entry Prep Glovebox Room Dry Air as defined in P&ID M-M6-K-02266 includes the following controls:

A. (2 ea.) PDI's for filters.
B. (1 ea.) Room PDI
C. (1 ea.) Moisture element and transmitter

3.3.2.3 Exit Staging Glovebox Dry Air as defined in P&ID M-M6-K-02266 includes the following controls:

A. (2 ea.) PDI's for filters.
B. (1 ea.) Room PDI
C. (1 ea.) Moisture element and transmitter

3.3.2.4 Glovebox Airlock Exhaust as defined in P&ID M-M6-K-02266 includes the following controls:

A. (1 ea.) PDI for filters.
B. (1 ea.) Flow element and transmitter

3.3.2.5 Glovebox Inert Air Exhaust / Supply as defined in P&ID M-M6-K-02268 includes the following controls:

A. (1 ea.) Pump Control (Run and status)
B. (2 ea.) PDI for filters.
C. (1 ea.) Room PDI

3.3.2.6 Glovebox Cooling as defined in P&ID M-M6-K-02267 includes the following controls:

A. (1 ea.) Blower control (Run and Status)
B. (1 ea.) TIC with (2) temperature elements and (1) control valve interface
C. (2 ea.) Temperature elements and transmitters
D. (1 ea.) Pressure element and transmitter
E. (1 ea.) Flow element and transmitter

3.3.2.7 Glovebox Maintenance Exhaust Air Flow Valve Control as defined in P&ID M-M6-K-02266 includes the following controls:

A. (1 ea.) Modulating Valve Control with limit switches

3.3.3 The installation of the Oxidation ICS I.O. cabinet ICS-CAB-020 to be located in the -20' Melter I/O Support Room and the OCS workstation ICS-OWS-014 to be located in the Feed Preparation / Oxidation Control Room are included in the ICS Scope of Work, J-SOW-K-00002 and defined in the Control Automation Plan J-PMP-K-00001 and the ICS Network Block Diagram J-J8-K-00050. These items are required for system operation, but are not included within the Oxidation Scope of Work.

3.3.4 MC&A Equipment (reference Control Block Diagram J-J8-K-00018 and SK-DE-DMO-0001 for location)

3.3.4.1 Scales (3 ea.) (reference Data Sheet no. J-JD-K-00035)

3.3.4.2 Barcode readers (6 ea.) (reference Data Sheet no. J-JD-K-00056)

3.3.4.3 Gamma Holdup Monitors (14 ea.) (reference Data Sheet no. J-JD-K-00055)

3.3.4.4 Passive Neutron Multiplicity Counter (1 ea.) (reference Data Sheet no. J-JD-K-00051). This system will include a computer rack DMO-NCC-001A on the -20 level.

3.3.4.5 Gamma Isotopic System (1 ea.) with a Mechanical Cooler (1 ea) (reference Data Sheet no. J-JD-K-00036). This system will include a computer rack DMO-GRIS-001A on the -20 level. (Ref. SK-DE-VIT-0009)

3.4 Electrical

3.4.1 The following major components require 480 VAC electrical service (Ref. E-E2-K-02225):

A. Service to DMO Furnace (2 ea.)
B. Service to Argon Blower (2 ea.)
C. Service to Vacuum Pump (3 ea.)
D. Service to Gantry Hoist (3 ea.)
E. Service to Basket Hoist (2 ea.)
F. Service to Furnace Drum (2 ea.)
G. Service to Inert Atmosphere Blower (1 ea.)

3.4.2 The following major components require 120 VAC electrical service (Ref. E-E2-K-02225):

Miscellaneous items such as can cutters, MC&A components, GB regen unit, knife gate doors, etc.

3.4.3 For bulk cable and raceway quantities see Attachment 6.3. Unless noted otherwise Construction will be responsible for furnishing these components and associated pullbox/junction boxes, fittings and termination hardware.

3.4.4 See Attachment 6.3 for glovebox penetration connector quantities.

3.5 Plant Design

3.5.1 Piping quantities estimate inside the glovebox are in Attachment 1. Piping and ductwork quantities outside the glovebox are contained in other scopes of work (SOW).

3.5.2 The estimated number of glovebox piping/tubing penetrations is 25.

3.6 Civil/Structural/Architectural

3.6.1 The C/S/A scope of work required for installation of the major components of the Oxidation system is as follows:

3.6.1.1 Material Entry and Staging Glovebox.
The size of the Glove Box will be 9’ x 4’ x 8’ high and will weigh approx. 15,000 lbs. It will be provided with 4 legs with an approximate footprint of 6” X 6” square plate. Each foot will be welded to 12” X 12” X ¾” thick, steel base plate which will

be anchored to the concrete floor on -40 Level with ¾" Dia. Maxi-bolts. Alternatively cast-in place anchors with grout sleeves or Hilti Kwik Bolt-TZ are acceptable for anchoring items.

3.6.1.2 Furnace Prep Glovebox.
The size of the Glove Box will be 18' x 4' x 8' high and will weigh approx. 27,500 lbs. It will be provided with 6 legs with an approximate footprint of 6" X 6" square plate. Each foot will be welded to 12" X 12" X ¾" thick, steel base plate which will be anchored to the concrete floor on -40 Level with ¾ "Dia. Maxi-bolts. Alternatively cast-in place anchors with grout sleeves or Hilti Kwik Bolt-TZ are acceptable for anchoring items.

3.6.1.3 Exit Staging Glovebox.
The size of the Glove Box will be 10' x 4' x 8' high and will weigh approx. 15,000 lbs. It will be provided with 4 legs with an approximate footprint of 6" X 6" square plate. Each foot will be welded to 12" X 12" X ¾" thick, steel base plate which will be anchored to the concrete floor on -40 Level with ¾ "Dia. Maxi-bolts. Alternatively cast-in place anchors with grout sleeves or Hilti Kwik Bolt-TZ are acceptable for anchoring items.

3.6.1.4 Furnace Gloveboxes [2 ea.]
The size of each Glove Box will be 5' x 4' x 12' high and will weigh approx. 16,000 lbs. It will be provided with 4 legs with an approximate footprint of 6" X 6" square plate. Each foot will be welded to 12" X 12" X ¾" thick, steel base plate which will be anchored to the concrete floor on -40 Level with ¾"Dia. Maxi-bolts. Alternatively cast-in place anchors with grout sleeves or Hilti Kwik Bolt-TZ are acceptable for anchoring items.

3.6.1.5 HEPA Filters floor mounted [3 ea.]
The size of the housing of each floor mounted HEPA Filter will be 30" x 30" x 30" high and will weigh approx. 100 lbs. Each filter shall be provided with a mounting frame with the bolt holes. The frame will be anchored to the concrete floor on -40 Level with ½" Dia. Maxi-bolts. Alternatively cast-in place anchors with grout sleeves or Hilti Kwik Bolt-TZ are acceptable for anchoring items.

3.6.1.6 HEPA Filters mounted above Gloveboxes [3 ea.]
The size of the housing of each HEPA Filter mounted above the Glovebox will be 36" x 36" x 36" high and will weigh approx. 300 lbs. It will be supported by a frame work made with TS 4x4x.375. The frame will be welded to the 12"x 12" x ¾" thick steel base plates, which will be anchored to the ceiling under -20 Level concrete floor with ¾" Dia. Maxi-bolts. Alternatively cast-in place anchors with grout sleeves or Hilti Kwik Bolt-TZ are acceptable for anchoring items.

3.6.1.7 Glovebox Atmosphere Regen. Unit
The size of this unit will be approx. 26" x 22" x 90" high and will weigh approximately 1170 lbs. It will be provided with a mounting frame with the bolt holes. The frame will be anchored to the concrete floor on -20 Level floor with ¾ "Dia. Maxi-bolts. Alternatively cast-in place anchors with grout sleeves or Hilti Kwik Bolt-TZ are acceptable for anchoring items.

3.6.1.8 Instrument Rack (DMO-INST-100)
The size of the Instrument Rack will be approx. 24" x 30" x 72" high and will weigh approx. 100 lbs. It will be provided with a mounting frame with the bolt holes. The frame will be anchored to the concrete floor on -40 Level with ¾ "Dia. Maxi-bolts. Alternatively cast-in place anchors with grout sleeves or Hilti Kwik Bolt-TZ are acceptable for anchoring items.

3.6.1.9 Mechanical Cooler.
The size of the Mechanical cooler package will be approx. 12” x 12” x 12” high and will weigh approx. 36 lbs. It will be provided with a mounting frame with the bolt holes. The frame will be anchored to the concrete floor on -40 Level with ½” Dia. Maxi-bolts. Alternatively cast-in place anchors with grout sleeves or Hilti Kwik Bolt-TZ are acceptable for anchoring items.

3.6.1.10 Instrument Cabinets. [6 ea.] (Ref. SK-DE-BOP-0011)
The size of each Instrument Cabinet will be approx. 24” x 30” x 48” high and will weigh approx. 80 lbs. It will be provided with the bolt holes for mounting the cabinet. The upper part of the Cabinet will be anchored to the concrete wall with ½” Dia. Maxi-bolts or Hilti Kwik-bolts and the base of the Cabinet will be anchored to the concrete floor on -20 Level with ½” Dia. Maxi-bolts. Alternatively cast-in place anchors with grout sleeves or Hilti Kwik Bolt-TZ are acceptable for anchoring items.

3.6.2 See Attachment 2 for C/S/A bulk material list.

4.0 ASSUMPTIONS

4.1 General Assumptions

4.1.1 The Construction Agency will be the SRS Construction Group. Design Services will provide engineering documentation for the installation of this equipment and will rely on the use of SRS Guides and Standards.

4.1.2 SRS Construction Group will procure all bulk materials.

4.1.3 SRS Construction Group will procure all off-the-shelf components and equipment identified on engineering data sheets that do not require testing or quality documentation.

4.2 Specific Assumptions

4.2.1 Mechanical

4.2.1.1 Glovebox detailed design and fabrication will be performed by a vendor/supplier.

4.2.1.2 The gloveboxes (except for Material Entry & Prep Glovebox) will have an inert atmosphere or dry air atmosphere. **HOLD.**

4.2.1.3 All pressure vessels with an ID 6" or greater will be per ASME B&PVC Section VIII, Division 1 code stamped or an approved waiver. An appropriate SRS verification record will be competed for each vessel and pressure protection device (disk or valve).

4.2.1.4 All piping will be per ASME B31.3.

4.2.2 Instrumentation and Controls

4.2.2.1 No specific assumptions have been made in this group.

4.2.3 Electrical

4.2.3.1 All permanently installed cabling will be routed in protected conduit/tray.

4.2.3.2 Cables installed within Gloveboxes will be routed within designated tray located within GB and/or supported from structural members within GB utilizing cable tie wraps.

4.2.3.3 Existing grounding grid is intact and adequate for grounding of new equipment.

4.2.3.4 Pull/junction boxes will be required at 100 ft. run minimum intervals. Assume box size to be 18” X18” X 6”.

4.2.3.5 Glovebox feed thru connector assemblies are functionally classified as SS and will be purchased as engineering material.

4.2.4 Plant Design

4.2.4.1 No specific assumptions have been made in this group.

4.2.5 Civil/Structural/Architectural

4.2.5.1 Core drills will be required for routing electrical conduit and piping through existing walls or floors.

4.2.5.2 Anchor bolts used for equipment and commodity supports will be A36 Drillco Maxi bolts. Alternatively, cast-in-place anchors with grout sleeves or Hilti Kwik Bolt-TZ are acceptable for anchoring items.

4.2.5.3 Assume Functional Classification for drilling holes in concrete surface is SC.

4.2.5.4 For electrical conduits and equipment supports, use cookbook No. C-CI-G-0039. For routing and supports for NPS 2” and smaller piping, use cookbook No. C-CH-G-00004.

4.2.5.5 Any components inside the gloveboxes are an integral part of the glovebox (such as can storage racks/wells). These components are not included for structural components.

4.3 HBDER Scope

4.3.1 A video camera in each Furnace Glovebox for 2 total to view basket installation and removal from the furnace, with associated camera controls would be HBDER scope.

5.0 REFERENCES

5.1 Drawing List

5.1.1 PUD Project Drawings & Sketches

5.1.1.1 E-E2-K-02225, Rev. C, Feed Preparation and Oxidation Area Single Line Diagram

5.1.1.2	J-J2-K-01552, Rev. A, Oxidation Logic Description
5.1.1.3	J-J8-K-00018, Rev. C, Metal Oxidation MC&A Control Block Diagram, (to be issued)
5.1.1.4	J-J8-K-00020, Rev. C, Oxidation System Control Block Diagram (to be issued)
5.1.1.5	J-JD-K-00035, Rev. B, Weigh Scale Datasheet
5.1.1.6	J-JD-K-00036, Rev. B, Gamma Isotopic System Datasheet
5.1.1.7	J-JD-K-00051, Rev. B, Oxidation Passive Neutron Multiplicity Counter, (to be issued)
5.1.1.8	J-JD-K-00055, Rev. A, Oxidation Gamma Holdup Monitors
5.1.1.9	J-JD-K-00056, Rev. A, Oxidation Barcode Readers
5.1.1.10	M-CLC-K-00693, Rev. A, Oxidation Glovebox Cooling Load and Chilled Water Demand Calculation
5.1.1.11	M-CLC-K-00706, Rev. A, Plutonium Disposition - Oxidation Glovebox: Air Flow Requirement
5.1.1.12	M-ESR-K-00017, Rev.0, Maintenance and Replacement Strategy
5.1.1.13	M-DS-K-00071, Rev. B, Can Cutter Datasheet
5.1.1.14	M-DS-K-00072, Rev. B, Direct Metal Oxidation Furnace Datasheet
5.1.1.15	M-DS-K-00073, Rev. B, Oxidation Glovebox Datasheet
5.1.1.16	M-DS-K-00074, Rev. B, Glovebox Atmosphere Regen. Unit
5.1.1.17	M-DS-K-00109, Rev. A, Oxidation Gantry Hoist with Electric Gripper
5.1.1.18	M-DS-K-00110, Rev. A, Oxidation Motorized Basket Hoist with Electric Gripper
5.1.1.19	M-DS-K-00111, Rev. A, Oxidation System Linear Actuated Can Cart with Scissors Lift
5.1.1.20	M-DS-K-00153, Rev. B, Oxidation System Furnace Basket Dumping Station
5.1.1.21	M-M5-K-01942, Rev. B, Oxidation System - Oxygen Feed/Offgas Exhaust Flow Diagram
5.1.1.22	M-M5-K-01943, Rev. C, Oxidation System Glovebox Ventilation Air Flow Diagram
5.1.1.23	M-M5-K-01944, Rev. C, Oxidation System Glovebox - Furnace Cooling Flow Diagram
5.1.1.24	M-M5-K-01945, Rev. C, Oxidation System Glovebox Inert Atmosphere Flow Diagram
5.1.1.25	M-M6-K-02266, Rev. C, Oxidation System Glovebox Ventilation Piping & Instrument Diagram
5.1.1.26	M-M6-K-02267, Rev. B, Oxidation System Glovebox Furnace Cooling Piping & Instrument Diagram
5.1.1.27	M-M6-K-02268, Rev. D, Oxidation System Glovebox Inert Atmosphere P&ID
5.1.1.28	M-M6-K-02270, Rev. C, Oxidation System Oxygen and Offgas Piping & Instrument Diagram
5.1.1.29	M-M8-K-00005, Rev. A, Oxidation System Block Flow Diagram
5.1.1.30	M-M8-K-00016, Rev. A, Oxidation System Material Handling Block Flow Diagram
5.1.1.31	P-PG-K-02142, Rev. B, Plutonium Disposition Project General Arrangement Plan at Level -20
5.1.1.32	P-PG-K-02143, Rev. B, Plutonium Disposition Project General Arrangement Plan at Level -40
5.1.1.33	SK-DE-BOP-0011, Rev. A, Electrical / IC Commodities Location Sketch Elevation -20
5.1.1.34	SK-DE-DMO-0001, Rev. C, Oxidation System Glovebox layout Plan & Sections
5.1.1.35	SK-DE-DMO-0002, Rev. A, Equipment Location Plan at -40, Oxidation Room
5.1.1.36	SK-DE-DMO-0003, Rev. B, Oxidation, Partial Floor Plan @ Elev. -40 & Building Sections
5.1.1.37	SK-DE-VIT-0009, Rev. A, Electrical / IC Commodities Location Sketch Elevation -40

5.1.2 Existing Savannah River Site (SRS) Drawings

5.1.2.1 W134828, Rev. 44, Process Area Bldg. #[KAC] Power Transformer Rm. #2 Electrical & Concrete
5.1.2.2 W134850, Rev. 19, Process Area Bldg #[KAC] Power Transformer Rm.#3 Electrical
5.1.2.3 W825664, Rev. 54, Process Area – Bldg. {KAC] Reactor Elect. Distr. System T.R.2, 480V
5.1.2.4 W825665, Rev. 55, Reactor Elect. Distr. System T.R.3, 480V. SWGR-Single Line Diagram Electrical

5.2 Design Input Documents

The following Facility Design Description and System Design Descriptions are the baseline documents used to develop this SOW.

5.2.1 Facility Design Description

5.2.1.1 G-FDD-K-00001, Rev B, “PUV Facility Design Description”

5.2.2 System Design Description

5.2.2.1 X-SYD-K-00003, Rev. B “Oxidation System (DMO) SDD”

5.2.3 Safeguards and Security Requirements Identification document

5.2.3.1 S-SRI-K-00005, Rev. 0, “KAC Safeguards and Security Requirements Identification Document for Plutonium Disposition”.

5.3 Applicable SRS & Industry Codes, Guides and Standards

5.3.1 Industry Codes and Standards

5.3.1.1 ASME B31.3, 2006 - Chemical Plant and Petroleum Refinery Piping
5.3.1.2 ASME Boiler and Pressure Vessel Code, Sect. VIII, Div. 1, 2006
5.3.1.3 NFPA 70, 2005 – National Electrical Code

See Functional Design Description and System Design Descriptions for more codes and standards. (Ref. G-FDD-K-00001 and X-SYD-K-00006).

5.3.2 SRS Guides & Standards

5.3.2.1 SRSESM 15980-03-R, Mechanical Installation of General and Nuclear Services Instrumentation.
5.3.2.2 WSRC-TM-95-1, Standard no. 03010, Rev: 1, Coring, Chipping, and Drilling in Concrete.
5.3.2.3 WSRC-TM-95-1, Standard no. 05057, Rev: 1, Control of Welding.
5.3.2.4 WSRC-TM-95-1, Standard no. 15980, Rev. 6, Mechanical Installation of Safety Class and Safety Significant Instrumentation.
5.3.2.5 WSRC-IM-95-58, Guide 03252-G, Rev: 1, Installation and Testing of Concrete Anchors.
5.3.2.6 WSRC-IM-95-58, Guide 15060-G, Rev. 5, Application of ASME B31.3.
5.3.2.7 WSRC-IM-95-58, Guide no. 15980-G, Rev.3, “Installation and Calibration of Instruments”
5.3.2.8 WSRC-IM-95-58, Guide no. 16051-G, Rev.2, “Installation of Electrical Raceway Systems and Cable Trays”
5.3.2.9 WSRC-IM-95-58, Guide no. 16052-G, Rev.3, “Installation of Electrical Wires, Cables and Terminations”
5.3.2.10 WSRC-IM-95-58, Guide no. 16053-G, Rev.2, “Installation of Electrical Equipment”
5.3.2.11 WSRC-IM-95-58, Guide no. 16056-G, Rev.2, “Installation of Grounding Systems”

5.4 Related Scopes of Work (SOW)

5.4.1 C-SOW-K-00009, Rev. 0, Scope of Work for Structural and Architectural Modifications for Process Building. (To be issued).

5.4.2 E-SOW-K-00017, Rev. 0, Electrical General Scope of Work. (To be issued).

5.4.3 J-SOW-K-00002, Rev. 0, Scope of work for ICS & MC&A Network. (To be issued).

5.4.4 J-SOW-K-00003, Rev. 0, Scope of Work for Health and Safety Monitoring System. (To be issued).

5.4.5 M-SOW-K-00020, Rev. 0, Scope of Work for HVAC System. (To be issued).

5.4.6 M-SOW-K-00021, Rev. 0, Scope of Work for Balance of Plant –Compressed Gas Systems. (To be issued).

5.4.7 M-SOW-K-00022, Rev. 0, Scope of Work for Balance of Plant -Water Systems. (To be issued).

5.5 Miscellaneous

5.5.1 C-CI-G-0039, Rev: 0, Electrical Conduit and Equipment Supports.
5.5.2 C-CH-G-00004, Rev. 0, Routing & Supports for NPS 2 and Smaller Piping.
5.5.3 M&O-PUD-2006-00033, Deletion of Offgas activities from the current schedule of Pu Disposition Project M09A.

6.0 ATTACHMENTS

6.1 Attachment 1, Bulk Material List, Piping/valves
6.2 Attachment 2, C/S/A Bulk Material List
6.3 Attachment 3, Electrical Bulk Material List
6.4 Oxidation Room 3D Room Layout Drawing

6.1 ATTACHMENT 1
BULK MATERIAL LIST PIPING/VALVES

Inside gloveboxes (Note: piping outside glovebox is covered in other SOW's)

Item No.	Description of Item	Spec	Size	Quantity	Remarks
1	Glovebox Ventilation (Dry Air)	NA	NA	0'-0"	Ref. Dwg. M-M6-K-02266 Rev. B
2	Process Chilled Water	PS204A	1/2"	40'-0"	Ref. Dwg. M-M6-K-02267 Rev. B
3	Inert Gas (Argon)	NA	NA	0'-0"	Ref. Dwg. M-M6-K-02268 Rev. B
4	Oxygen and Offgas	PS204A	1"	70'-0"	Ref. Dwg. M-M6-K-02270 Rev. A

6.2 ATTACHMENT 2
C/S/A BULK MATERIAL LIST

Note: Table below includes the bulk material for installing/supporting major equipment. Bulk material for piping and conduit support is not included in the table below.

Item No.	Description of Item	Size	Quantity	Remarks
1	Base Plates	12”x12”x ¾”	34 Ea.	Galvanized steel
2	Anchor Bolts	¾” Dia.	144 Ea.	
3	Anchor Bolts	½” Dia.	40 Ea.	
4	Tube Steel	TS 4x4x.375	60 Lft.	Galvanized steel

6.3 ATTACHMENT 3, ELECTRICAL BULK MATERIAL LIST

Scope Set: _____ **Date:** _____

Prepared By: _____ **Reviewed By:** _____

Exterior Glovebox Cables

Sum of Qty XGB (ft)	
Ext. Cable Size/Type	Total
3/c #12	4,195
#6 soft drawn copper	600
1pr #16	7,515
3/C # 18	1,410
GIS VENDOR SUPPLIED CABLE	120
NMC VENDOR SUPPLIED CABLE	120
HOLD. MON. VENDOR SUPPLIED	1,540
Grand Total	15,500

Interior Glovebox Cables

Sum of Qty NGB (ft)	
GB Cable Size/Type	Total
1pr #16	720
3/C # 18	160
3/c #12	480
Grand Total	1,360

All Raceway Types

Sum of Qty Rcwy (ft)	
RCWY	Total
1 1/2" IMC	570
1" IMC	220
2"	145
2" IMC	90
3 " IMC	180
3" IMC	70
3/4" IMC	1,560
(blank)	0
Grand Total	2,835

All Raceway Types Grouped by Red Designation

Sum of Qty Rcwy (ft)		
Red	RCWY	Total
N	1 1/2" IMC	480
	1" IMC	220
	2"	145
	3 " IMC	180
	3" IMC	70
	3/4" IMC	1,055
N Total		2,150
Y	1 1/2" IMC	90
	2" IMC	90
	3/4" IMC	505
Y Total*		685
(blank)	(blank)	0
(blank) Total		0
Grand Total		2,835

Total glovebox penetrations= 46

*Red conduit contains wiring for classified systems, and installation and support is more difficult than for “black” unclassified wiring systems.

6.3 ATTACHMENT 3, ELECTRICAL BULK MATERIAL LIST

Description: KAC Pu Disposition Modifications Oxidation, Bulk Materials, Cable and Conduit
Reference: E-E2-K-02225 R/C MCC 31E SINGLE LINE, J-J8-K-00020 CONTROL BLOCK DIAGRAM,

			Cable Estimates (Exterior GB)			GB Pentr	(Interior. GB)	Shared Rcwy/Tray	Raceway Estimates			
Item #	From Equipment	To Equipment	XGB Length (A) (ft)	Qty (A)	Cable size/description	Conn. (Qty)	NGB Length (B) (ft)	Length (C) (ft)	Length (D) (ft)	Qty (D)	Size/Desc. (D)	Red
1	ELNH-MCC-31E	VAC. PUMP #1	160	1	3/c #12	1	20	0	140	1	1 1/2" IMC	
2	ELNH-MCC-31E	VAC. PUMP #2	160	1	3/c #12	1	20	140	0	1	n/a	N
3	ELNH-MCC-31E	GANTRY HOIST	160	1	3/c #12	1	20	140	0	1	n/a	N
4	ELNH-MCC-31E	FURN. CONT. #1	130	1	3/c #12	0	0	55	55	1	1" IMC	N
5	ELNH-MCC-31E	FURN. CONT. #2	130	1	3/c #12	0	0	55	55	1	1" IMC	N
6	ELNH-MCC-31E	CONTROLLER CAB. #1	130	1	3/c #12	0	0	55	55	1	1" IMC	N
7	ELNH-MCC-31E	CONTROLLER CAB. #2	130	1	3/c #12	0	0	55	55	1	1" IMC	N
8	ELNH-MCC-31E	ARGON BLOWER#1	160	1	3/c #12	1	20	0	140	1	1 1/2" IMC	N
9	ELNH-MCC-31E	ARGON BLOWER #2	160	1	3/c #12	1	20	140	0	1	n/a	N
10	ELNH-MCC-31E	INERT ATM BLOWER	160	1	3/c #12	1	20	140	0	1	n/a	N
11	ELNH-MCC-31E	DUMBWAITER CONTROLLER	95	1	3/c #12	0	0	0	75	1	3/4" IMC	N
12	FURN. CONT. #1	FURNACE #1	165	1	3/c #12	1	20	0	145	1	2"	N
13	FURN. CONT. #2	FURNACE #2	165	1	3/c #12	1	20	145	0	1	n/a	N
14	CONTROLLER CAB. #1	FURNACE DRUM MOTOR	165	1	3/c #12	1	20	145	0	1	n/a	N
15	CONTROLLER CAB. #1	FURNACE BASKET HOIST	165	1	3/c #12	1	20	145	0	1	n/a	N
16	CONTROLLER CAB. #1	FURNACE GANTRY HOIST	165	1	3/c #12	1	20	145	0	1	n/a	N
17	CONTROLLER CAB. #2	FURNACE DRUM MOTOR	165	1	3/c #12	1	20	145	0	1	n/a	N
18	CONTROLLER CAB. #2	FURNACE BASKET HOIST	165	1	3/c #12	1	20	145	0	1	n/a	N
19	CONTROLLER CAB. #2	FURNACE GANTRY HOIST	165	1	3/c #12	1	20	145	0	1	n/a	N
20	Equipment	Ground grid	50	12	#6 soft drawn			30	0	0	n/a	N

6.3 ATTACHMENT 3, ELECTRICAL BULK MATERIAL LIST

Description: KAC Pu Disposition Modifications Oxidation, Bulk Materials, Cable and Conduit
Reference: E-E2-K-02225 R/C MCC 31E SINGLE LINE, J-J8-K-00020 CONTROL BLOCK DIAGRAM,

Item #	From Equipment	To Equipment	Cable Estimates (Exterior GB)			GB Pentr	(Interior. GB)	Shared Rcwy/Tray	Raceway Estimates			
			XGB Length (A) (ft)	Qty (A)	Cable size/description	Conn. (Qty)	NGB Length (B) (ft)	Length (C) (ft)	Length (D) (ft)	Qty (D)	Size/Desc. (D)	Red
					copper							
21	ICS-CAB-100	DMO-INST-100	200	18	1pr #16	0	0	0	180	1	3 " IMC	N
22	DMO-INST-100	OXIDATION GLOVEBOX	90	36	1pr #16	10	20	0	70	1	3" IMC	N
23	DMO-CNSL-011	DMO-JB-011 GB MT'D FESTOON	75	1	1pr #16	1	0	0	55	1	3/4" IMC	N
24	DMO-CNSL-012	DMO-JB-012 GB MT'D FESTOON	75	1	1pr #16	1	0	0	55	1	3/4" IMC	N
25	DMO-CNSL-021	DMO-JB-021 GB MT'D POWER FESTOON	75	1	1pr #16	1	0	0	55	1	3/4" IMC	N
26	DMO-CNSL-022	DMO-JB-022 GB MT'D CONTROLS FESTOON	75	1	1pr #16	1	0	0	55	1	3/4" IMC	N
27	INNER CONVENIENCE CAN CUTTER SWITCH	DMO-CUTR-002 INNER / CONVENIENCE CAN CUTTER	75	1	1pr #16	1	0	0	55	1	3/4" IMC	N
28	OUTER CAN CUTTER HAND SWITCH	DMO-CUTR-001 OUTER CAN CUTTER	75	1	1pr #16	1	0	0	55	1	3/4" IMC	N
29	DMO-CNSL-050 ENTRY STAGING GANTRY HOIST CONTROL CONSOLE	DMO-HOI-001 OXIDATION GANTRY HOIST #1	75	1	1pr #16	1	0	0	55	1	3/4" IMC	N
30	DMO-CNSL-051 FURNACE PREP GANTRY HOIST CONTROL CONSOLE	DMO-HOI-002 OXIDATION GANTRY HOIST #2	75	1	1pr #16	1	0	0	55	1	3/4" IMC	N
31	DMO-CNSL-052 EXIT STAGING GANTRY HOIST CONTROL CONSOLE	DMO-HOI-003 OXIDATION GANTRY HOIST #3	75	1	1pr #16	1	0	0	55	1	3/4" IMC	N

6.3 ATTACHMENT 3, ELECTRICAL BULK MATERIAL LIST

Description: KAC Pu Disposition Modifications Oxidation, Bulk Materials, Cable and Conduit
Reference: E-E2-K-02225 R/C MCC 31E SINGLE LINE, J-J8-K-00020 CONTROL BLOCK DIAGRAM,

Item #	From Equipment	To Equipment	Cable Estimates (Exterior GB)			GB Pentr	(Interior. GB)	Shared Rcwy/Tray	Raceway Estimates			
			XGB Length (A) (ft)	Qty (A)	Cable size/description	Conn. (Qty)	NGB Length (B) (ft)	Length (C) (ft)	Length (D) (ft)	Qty (D)	Size/Desc. (D)	Red
32	MCA-CAB-001	DMO-GRIS-001A	250	1	3/C # 18	0	0	0	230	1	3/4" IMC	N
33	MCA-CAB-001	DMO-NCC-001A	250	1	3/C # 18	0	0	0	230	1	3/4" IMC	N
34	DMO-GRIS-001A	DMO-GRIS-001	120	1	GIS VENDOR SUPPLIED CABLE	0	0	0	100	1	1 1/2" IMC	N
35	DMO-NCC-001A	DMO-NCC-001	120	1	NMC VENDOR SUPPLIED CABLE	0	0	0	100	1	1 1/2" IMC	N
36	DMO-GRIS-001	DMO-CHU-001	45	1	3/C # 18	0	0	0	25	1	3/4" IMC	N
37	MCA-CAB-010	DMO-RDR-001	55	1	3/C # 18	0	0	0	35	1	3/4" IMC	Y
38	MCA-CAB-010	DMO-RDR-002	65	1	3/C # 18	0	0	0	45	1	3/4" IMC	Y
39	MCA-CAB-010	DMO-RDR-003	70	1	3/C # 18	0	0	0	50	1	3/4" IMC	Y
40	MCA-CAB-010	DMO-RDR-004	75	1	3/C # 18	0	0	0	55	1	3/4" IMC	Y
41	MCA-CAB-010	DMO-RDR-005	85	1	3/C # 18	0	0	0	65	1	3/4" IMC	Y
42	MCA-CAB-010	DMO-RDR-006	95	1	3/C # 18	0	0	0	75	1	3/4" IMC	Y
43	MCA-CAB-010	DMO-SCL-001	200	1	3/C # 18	1	120	0	180	1	3/4" IMC	Y
44	MCA-CAB-010	DMO-SCL-002	110	1	3/C # 18	1	20	90	0	1	3/4" IMC	Y
45	MCA-CAB-010	DMO-SCL-003	110	1	3/C # 18	1	20	90	0	1	3/4" IMC	Y
46	MCA-CAB-010	DMO-RE/RT-001A &1B	110	2	HOLD. MON. VENDOR SUPPLIED	0	0	0	90	1	1 1/2" IMC	Y
47	MCA-CAB-010	DMO-RE/RT-002A &2B	110	2	HOLD. MON. VENDOR SUPPLIED	0	0	90	0	1	1 1/2" IMC	Y
48	MCA-CAB-010	DMO-RE/RT-003A THRU 003J	110	10	HOLD. MON. VENDOR SUPPLIED	0	0	0	90	1	2" IMC	Y
49	1-20VOLT DISTR. PANEL	MISC. GLOVEBOX EQUIP.	130	10	3/c #12	10	20	110	0	1	3 " IMC	N
					Total GB Penetrations	46						

M-SOW-K-00019 REV. 0
6.4 ATTACHMENT 4
PAGE 25 OF 25

SRP DRAWING NO.

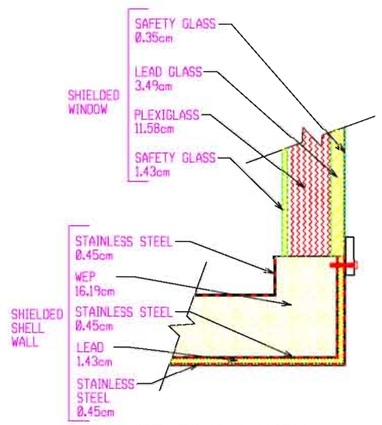

SHIELDING LAYOUT

NTS
(ALL SIDES OF GLOVEBOX)

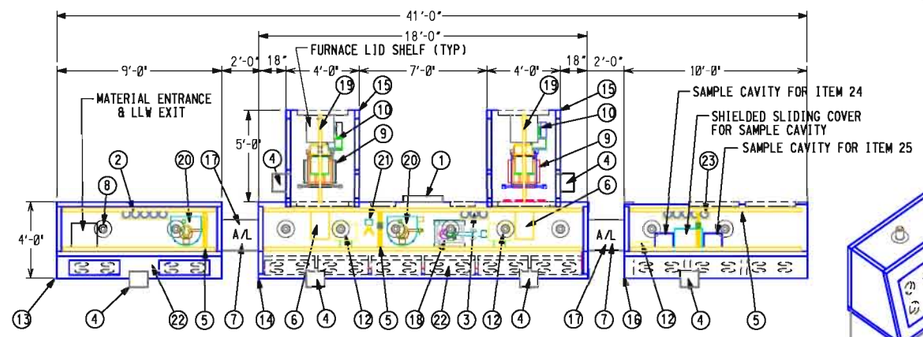

PLAN

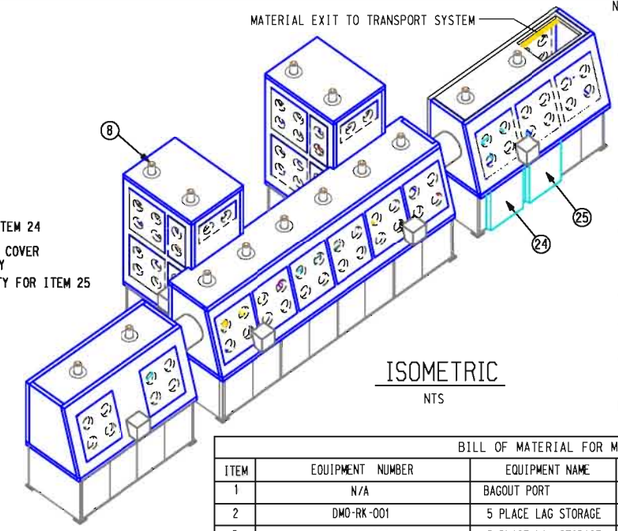

ISOMETRIC

NTS

NOTES:

1) DURING DETAILED DESIGN, SEVERAL ADDITIONAL ATTRIBUTES SHALL BE REVISED INTO THIS LAYOUT:

a) ALL GLOVEBOX OPERATIONS SIDE WINDOW AREAS ARE TO BE ANGLED TOWARDS THE CENTER AT 10 DEGREES FOR EASE OF THE OPERATIONS & MAINTENANCE VISIBILITY.

b) THE AIRLOCK & ISOLATION DOORS ARE TO BE A GUILLOTINE STYLE. THESE DOORS MUST OPEN VERTICALLY WHEN OPENING & CLOSING IN THE GLOVEBOX. THE DIAMETER OF THE AIRLOCK WILL BE GOVERNED BY THE DOOR SWING AVAILABLE WITHIN THE ANGLED WALLS OF THE GLOVEBOX & THE EQUIPMENT THAT SHOULD BE PASSED THRU THE AIRLOCK.

c) HEPA FILTERS HAVE NOT BEEN SHOWN. THE HORIZONTAL PUSH-THRU CONCEPT UTILIZED AT LANL SHOULD BE CONSIDERED.

d) OTHER K-AREA INTERIM STORAGE (KAIS) GLOVEBOX DESIGN DETAILS SHOULD BE CONSIDERED FOR INCORPORATION IN THIS GLOVEBOX DESIGN - SUCH AS THE USE OF LoCalhene GLOVE PORTS & PREMIER TECHNOLOGY WINDOWS & FRAMES.

e) GB DESIGN TO PROVIDE METHOD OF ATTACHMENT TO FASTEN NEW WALL SEPARATING OPERATIONS & MAINTENANCE SIDES.

f) ITEM 14, GB INTERIOR HEIGHT MAY NEED TO BE RAISED WHEN DUMPING STATION DETAILS ARE KNOWN.

g) SHIELDING, CRITICALITY & LAG STORAGE LOCATION HAS NOT BEEN FINALIZED AT THIS TIME & MAY CAUSE REDESIGN WHEN FINALIZED.

h) LOWER FRONT OF GLOVEBOX TO BE COVERED WITH DOORS/PANELS.

BILL OF MATERIAL FOR METAL OXIDATION GLOVEBOX

ITEM	EQUIPMENT NUMBER	EQUIPMENT NAME	REQ'D	DATA SH	DESCRIPTION
1	N/A	BAGOUT PORT	1	NONE	18" DIA. FOR TRU WASTE
2	DMO-RK-001	5 PLACE LAG STORAGE	1	NONE	3013 CONTAINERS
3	DMO-RK-003	3 PLACE LAG STORAGE	1	NONE	3013 INNER CONTAINERS & TRANSPORT CANS
4	DMO-RDR-001, 002, 003, 004, 005 & 006	BAR CODE READER	6	JJDK00056	MICROSCAN, MS-860
5	DMO-HOI-001, 002 & 003	GANTRY HOIST	3	NONE	3D MOVEMENT REQUIRED
6	DMO-CART-001 & 002	CAN CART	2	NONE	TRANSPORTS CANS, TOOLS, FURN BSKT'S
7	DMO-CNVR-001, 002	A/L TELESCOPING TRAY	2	NONE	AIRLOCK USE
8	DMO-RE/RT-001A,B,002A,B,003A-003J	GAMMA HOLDUP MONITOR	14	JJDK00055	CANBERRA - 802 / ORTEC - digIBASE
9	DMO-FURN-001 & 002	OXIDATION FURNACE	2	MDSK00072	DIRECT METAL OXIDATION (DMO)
10	DMO-BLO-001 & 002	ARGON BLOWER	2	MDSK00072	SKID MOUNTED INSIDE GB
11	DMO-P-001 & 002	VACUUM PUMP	2	MDSK00072	TO BE LOCATED UNDERNEATH GB
12	DMO-SCL-001, 002, 003	SCALE	3	JJDK00035	METTLER TOLEDO, MODEL XS16001L
13	GBS-GB-001A	GLOVEBOX	1	MSPPK00059	MATERIAL ENTRY & PREP, 9'L x4'W x8'H
14	GBS-GB-001B	GLOVEBOX	1	MSPPK00059	FURNACE PREP 18'L x4'W x8'H
15	GBS-GB-001C & 001D	GLOVEBOX	2	MSPPK00059	FURNACE 5'L x4'W x11'-8"H
16	GBS-GB-001E	GLOVEBOX	1	MSPPK00059	EXIT STAGING GB10'L x4'W x8'H
17	GBS-ALOK-001A & 001B	AIRLOCK	2	NONE	30" DIAMETER x 2' LONG
18	DMO-STAT-001	DUMPING STATION	1	NONE	DUMPS A 3013 TO FURNACE BASKET
19	DMO-HOI-004 & 005	BASKET HOIST	2	NONE	REMOVE FURNACE LID AND BASKET
20	DMO-CUTR-001 & 002	CAN CUTTER	2	MDSK00071	OUTER & INNER 3013 & CONVENIENCE CAN
21	DMO-COP-001	CONV. CAN OPENER	1	NONE	CONVENIANCE CAN OPENER
22	DMO-TRLY-001 & 002	TROLLEY CART	2	NONE	MANUAL TRANSPORT IN GB
23	DMO-RK-002	5 PLACE LAG STORAGE	1	NONE	TRANSPORT CANS (1N EXIT STAGING GB)
24	DMO-GRIS-001	GAMMA ISOTOPIC SYSTEM	1	JJDK00036	ANTECH, SERIES 3610
25	DMO-NCC-001	APNMC	1	JJDK00051	ANTECH, MODEL 2442

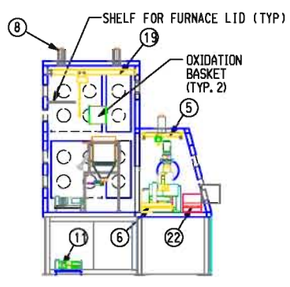

SIDE

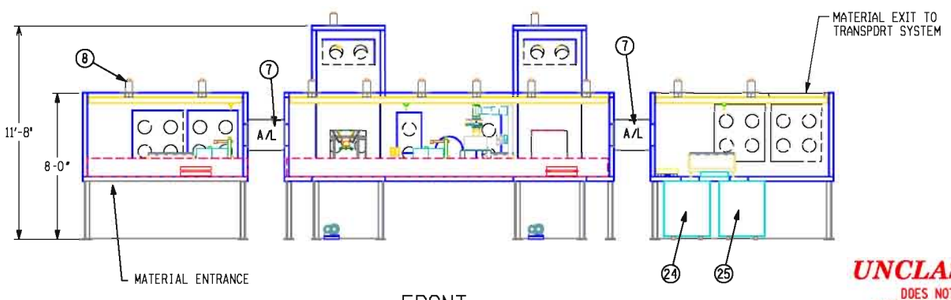

FRONT

UNCLASSIFIED

DOES NOT CONTAIN
UNCLASSIFIED CONTROLLED
NUCLEAR INFORMATION

ADC &/or Reviewing Official: E.C. TEFFT III, SR. ENG

Date: 2-08-07

LATEST C REVISION

SKETCH NUMBER: SK-DE-DMO-0001

PRDJ.	REV. NO.	DATE	REVISION	PRP'D	LEAD ENG	CHK'D	APRV'D	APRV'D	APRV'D	PROJ.	REV. NO.	DATE	REVISION	PRP'D	LEAD ENG	CHK'D	APRV'D	APRV'D	APRV'D
										MO9A	A	10-17-06	ISSUED FOR CDR (PRELIMINARY), ACTIVITY PUDE1080	JP	DN	ECT	BR	BCP	N/A
										MO9A	B	1-10-07	GENERAL REVISION TO ADD MCBA EQUIPMENT, UPDATED B.O.M. & NOTES	JP	DN	ECT	DE	BCP	N/A
										—	—	—	RE-ISSUED FOR CDR (PRELIMINARY), ACTIVITY PUDE71T01	—	—	—	—	—	—
										MO9A	C	2-08-07	GEN'L REV & REV'D SHIELDING LAYOUT DETAIL, RE-ISSUED FOR CDR (PRELIM)	JP	DN	ECT	WJR	RCK	N/A

THIS DRAWING HAS BEEN FURNISHED BY THE SAVANNAH RIVER SITE. THE INFORMATION AND KNOW HOW THEREON MAY NOT BE USED NOR THE DRAWING REPRODUCED WITHOUT WRITTEN PERMISSION OF THE PRIME CONTRACTOR. ALL REPRODUCTIONS IN WHOLE OR IN PART, INCLUDING VENDOR'S SHOP DRAWINGS, SHALL BEAR OR REFER TO THIS STAMP.

REFERENCE DRAWINGS

EE2K02225	SINGLE LINE DIAGRAM
MM5K01942	OXY & OFFGAS FLOW DIAGRAM
MM5K01943	GLOVEBOX VENTILATION FLOW DIAGRAM
MM5K01944	GLOVEBOX/FURN COOLING FLOW DIAGRAM
MM5K01945	GLOVEBOX INERT ATMOS FLOW DIAGRAM
MM8K00005	OXIDATION SYS BLOCK FLOW DIAGRAM
MM8K00016	MATERIAL HANDLING BLOCK FLOW DIAGRAM
MM6K02266	GLOVEBOX VENTILATION P&ID
MM6K02267	GLOVEBOX/FURN COOLING P&ID
MM6K02268	GLOVEBOX INERT ATMOS P&ID
MM6K02270	OXY & OFFGAS P&ID
JJ8K00018	MCBA CONTROL BLOCK DIAGRAM

REFERENCE STANDARDS

UNITED STATES DEPARTMENT OF ENERGY

SAVANNAH RIVER SITE

BLDG. NO.	SITE CLEARANCE NO.	DESIGN AREA NO.	DESIGN GROUP
KAC	N/A	10D-K	PD & CS

TITLE

PLUTONIUM DISPOSITION PROJECT

OXIDATION SYSTEM
GLOVEBOX LAYOUT

PLAN & SECTIONS

SCALE	SRP DRAWING NO.	SHEET NO.	LATEST REVISION
1/4" = 1'-0"	N/A	1 of 1	C

JIM

Scale shown on this drawing is only applicable when plotted at 22"x34" (actual drawing size)

2-8-07

LEVELS 1111111111222222222233333333334444444444555555555566666 1234567890123456789012345678901234567890123456789012345678901234567890123

VHL: Mon Jan 08 07:48:56 2007

PLUTONIUM DISPOSITION PROJECT (U)

Project M09A

SCOPE OF WORK

M-SOW-K-00020 Revision 0

For

Heating Ventilation and Air Conditioning (HVAC) Systems (U)

Originated by: _____ Date: 4-11-2007
Arun Amin
Mechanical Engineer

Reviewed by: _____ Date: 4/11/2007
Suresh Soorma
Mechanical Engineer

Approved by: _____ Date: 4/11/07
Clayton Holloway
Mechanical Lead

Approved by: _____ Date: 4/12/07
Roderick King
Electrical/I&C Lead

Approved by: _____ Date: 4/11/07
Ghada Elchoufi
C/S/A Lead

Approved by: _____ Date: 4-11-07
Drew Negus
Plant Design Lead

Approved by: _____ Date: 4-12-07
John Hammond
Construction Lead

Approved by: _____ Date: 4-11-07
Ashok Shah
Design Authority

Approved by: _____ Date: 4/12/07
B.C. Patel
Project Engineer

UNCLASSIFIED
DOES NOT CONTAIN UNCLASSIFIED CONTROLLED NUCLEAR INFORMATION
DC/RO: _____ 4-11-07

Revision Page

Revision	Revision Date	Affected Section	Description of Change
0	4-12-07	N/A	Initial Revision

Table of Contents

Section **Page**

1.0 SCOPE 4
1.1 General Description 4
1.2 Background 4
2.0 ACRONYMS/ABBREVIATIONS 5
3.0 DESCRIPTION OF PHYSICAL WORK 6
3.1 Performance Category and Safety Classification (SC, SS, PS, GS) 6
3.2 Mechanical/Nuclear/Process 6
3.3 Instrumentation and Controls 11
3.4 Electrical 14
3.5 Plant Design 16
3.6 Civil/Structural/Architectural 16
4.0 ASSUMPTIONS 17
4.1 General Assumptions 17
4.2 Specific Assumptions 17
5.0 Technology Development Issues 18
6.0 REFERENCES 18
6.1 Drawing List 18
6.2 Design Input Documents 18
6.3 Applicable SRS & Industry Codes, Guides and Standards 19
6.4 Related Scopes of Work (SOW) 19
6.5 Miscellaneous 20
7.0 ATTACHMENTS 20
7.1 Attachment 7.1, Mechanical HVAC Ductwork Bulk Material List (1 Page) 20
7.2 Attachment 7.2, Electrical and I&C Bulk Material List (2 Pages) 20
7.3 Attachment 7.3, C/S/A Bulk Material List (1 Page) 20

1.0 SCOPE

1.1 General Description

This Scope of Work (SOW) covers the Heating, Ventilation and Air Conditioning (HVAC) System for the Plutonium Disposition Project. The HVAC System provides confinement ventilation that minimizes the spread of potentially airborne radiological and chemical contaminants within the facility and to the environment and limits personnel exposure within the ALARA guidelines. The HVAC system also provides proper environmental control for the health, safety, and comfort of the operating personnel and for equipment protection.

1.2 Background

The Office of Environmental Management has approximately 13 metric tons (MT) of plutonium in approximately 21 MT bulk materials without any defined disposition path. The Plutonium Disposition (PUD) Project is critical to meet the Department of Energy's strategic goal of providing a responsible resolution to the permanent disposal of the nation's excess high-level radioactive materials and waste; and to enable the cleanup of Environmental Management sites.

The Plutonium Vitrification Facility (PVF) will be located at the K-Area Complex (KAC) to disposition up to approximately 13 Metric Tons (MT) of Environmental Management (EM) owned surplus plutonium. The facility will utilize a vitrification process to vitrify plutonium into a lanthanide borosilicate (LaBS) glass matrix. This glass will be packaged into bagless transfer cans and placed inside a Defense Waste Processing Facility (DWPF) type canister. The canister will be transported to DWPF and filled with High Level Waste (HLW) glass. The DWPF canisters will be stored in the Glass Waste Storage Buildings and later transported to the geologic repository at Yucca Mountain.

This Scope of Work (SOW) has been developed for the purpose of facilitating construction cost and schedule estimates for the Conceptual Design Report (CDR) on the PUD project. The input to this SOW was the approved technical baseline consisting of a Facility Design Description (FDD) and associated System Design Descriptions (SDD). Every intent has been made to assure alignment and consistency between this SOW and the appropriate sections of the technical baseline, in order to provide accurate estimates. This SOW is not a PUD technical baseline document. A more detailed description of the system can be found in the associated SDD listed in the reference section.

A HOLD is placed to identify information that is preliminary in nature, results from a design uncertainty, originates from insufficient documentation, needs verification, or identifies a discrepancy. A **TBD** is placed to identify places in the text where numeric values or descriptive information is not available at the time that the current revision of the SOW is released.

2.0 ACRONYMS/ABBREVIATIONS

2.1

Acronyms	Definition
AHU	Air Handling Unit
ANSI	American National Standards Institute
ASHRAE	American Society of Heating Refrigeration and Air-Conditioning Engineers
ASME	American Society of Mechanical Engineers
C/S/A	Civil/Structural/Architectural
CDR	Conceptual Design Report
DS	Design Services
DWPF	Defense Waste Processing Facility
ECF	Entry Control Facility
EM	Environmental Management
FDD	Facility Design Description
GS	General Services
HLW	High Level Waste
HVAC	Heating, Ventilation and Air Conditioning
HEPA	High-Efficiency Particulate Air (filter)
ICS	Integrated Control System
KAC	K-Area Complex
LaBS	Lanthanide BoroSilicate
lbs	pounds
MT	Metric Ton
NDA	Non-Destructive Assay
NFPA	National Fire Protection Association
P&ID	Piping & Instrumentation Diagram
PC	Performance Category
PS	Production Support
PU	Plutonium
PUD	Plutonium Disposition
PVF	Plutonium Vitrification Facility
SC	Safety Class
SDD	System Design Description
SOW	Scope of Work
SRS	Savannah River Site
SRSESM	Savannah River Site – Engineering Standards Manual
SS	Safety Significant
SSC	Structure, System, Component
TBD	To Be Determined
UL	Underwriters Laboratory
VFD	Variable Frequency Drive
WSRC	Washington Savannah River Company

3.0 DESCRIPTION OF PHYSICAL WORK

3.1 Performance Category and Functional Classification (SC, SS, PS, GS)

3.1.1 Performance Category

The Performance Categories for HVAC Systems are as follows:
(Reference M-SYD-K-00005, Table1-1)

- The Process Area Supply Air System is PC-1,
- Supply Fan Interlock to Exhaust System is PC-3
- Exhaust Duct (inside the process building) PC-2;
- Exhaust Duct (outside process building) PC-3
- Glovebox Exhaust System PC-2;
- Exhaust Fans PC-3;
- Sand Filter PC-3
- Stack PC-3;
- Stack Monitoring PC-3

3.1.2 Functional Classification

3.1.2.1 The systems in this SOW shall be designed in accordance with the requirements of WSRC Manual WSRC-E7, Conduct of Engineering and Technical Support Procedure 2.25 Rev 14, "Functional Classification", as follows (Reference M-SYD-K-0005):

A. Process Area Supply Air System:
Functional Classification – Production Support (PS)
B. Process Area Exhaust Air System:
Functional Classification – Safety Class (SC)
C. Glovebox Exhaust System:
Functional Classification - Safety Significant (SS)
D. Non- Process Area HVAC System:
Functional Classification - General Support (GS)

3.2 Mechanical/Nuclear/Process

3.2.1 Process Area Supply Air System

Process Area Supply Air System is a once through type system and provides conditioned air to process area to maintain proper environmental control for the health, safety, and comfort of the operating personnel and for equipment protection.

3.2.1.1 Process Area Supply Air System Components - Refer to P&ID # M-M6-K-02310 and Air Flow Diagrams # M-M5-K-01952, 01953 and 01957 for the for the Process Area HVAC Supply Air System. The major components for this system are:

A. Air Handling Units (3 Each)
B. Isolation Dampers (3 Each)
C. Tornado Damper (1 Each)
D. Electric Duct Heaters (30 Each)
E. Fire Dampers (Number of the dampers are to be based on ratio of dampers per linear feet of Supply duct per S-3013 Project))
F. Ductwork and Accessories (See Att. 7.1 for Bulk Material Quantities)

3.2.1.2 Air Handling Units (AHU-001, 002 and 003) - PS

Each of this Process Area Supply AHU shall be designed for 100 percent outside air equipped with Inlet weather hood, with insect screen, weather-stripped inlet damper, filters (pre-filter and medium efficiency filter), Chilled Water Cooling coil, Electric Heating coil, Steam Humidifier and a direct drive centrifugal fan. Fan motor shall include VFDs. Refer to Data Sheet M-DS-K- 00120 for the AHU performance requirements.

3.2.1.3 AHU Isolation Dampers (DMP-028, 029, and 030) - PS

The AHU Isolation Dampers shall be provided with an electric actuator. The dampers shall be galvanized carbon steel. The damper shall be designed and constructed in accordance with ASME AG-1, Section DA. The seat and frame leakage shall meet the requirements of ASME AG-1, Section DA, for Leakage Class II for seat and Class C for frame.

3.2.1.4 Tornado Dampers (DMP-031) - SC

The Tornado Dampers shall be designed for counter balance to actuate and isolate based on tornado pressure to prevent the transmission of tornado pressure surge. The damper shall be stainless steel. The seat and frame leakage shall meet the requirements of ASME AG-1, Section DA, for Leakage Class I for seat and Class B for frame.

3.2.1.5 Electric Duct Heaters (EHTR-001 through 027 and 029 through 031) - PS

The Electric Duct Heaters shall be UL Listed, open coil type and suitable for continuous service. The packaged controls shall be complete with all magnetic contactors, transformers, fused disconnect switch with control panel door interlock. Refer to Data Sheets M-DS-K-00127 through 00132, 00142 and 00149

3.2.1.6 Fire Dampers (DMP-TBD) - PS

The Fire Dampers shall be curtain type dynamic fire dampers. The fire dampers shall be constructed, tested and labeled in accordance with the latest UL 555. The fire dampers shall have a fire rating of 3 hours and shall meet the requirements of the latest edition of NFPA90A. Refer to 3-D model for various damper sizes.

3.2.1.7 Ductwork and Accessories - PS

The Supply air ductwork and accessories shall be galvanized carbon steel. Ductwork shall be constructed and tested in accordance with the requirement in ASME AG-1,Section SA and shall meet Level 3 requirements for the leak tightness.

3.2.2 Process Area Exhaust Air System

Process Area Exhaust Air System provides exhaust ventilation to protect facility personnel from in-process radioactive and hazardous materials. This system also provides confinement ventilation that minimizes the spread of potentially airborne radiological and chemical contaminants within the facility and to the environment and limits personnel exposure within the ALARA guidelines. The process areas will be exhausted through a common Sand Filter and Exhaust Fan-house to a stack.

3.2.2.1 Process Area Exhaust Air System Components - Refer to P&ID # M-M6-K-02311 and Air Flow Diagrams # M-M5-K-01954, 01955, 01956 and 01957 for the for the Process Area Exhaust Air System. The major components for this system are:

A. Exhaust Air Fans (3 Each)
B. Isolation Dampers (3 Each)
C. Tornado Damper (1 Each)
D. Slide Gate Isolation Dampers (6 Each)
E. Fire Wraps for the duct penetrating Fire Barriers (600 Lin. Ft. refer to assumption 4.2.1.1)
F. Sand Filter (1 Each)
G. Ductwork and Accessories (See Att. 7.1 for Bulk Material Quantities)

3.2.2.2 Exhaust Air Fans (FAN-001, 002 and 003) - SC

The Exhaust Air Fans shall be Class 4, SWSI Centrifugal Fans. The fans shall be direct drive and fan housing shall be constructed of minimum 10 gauge Stainless steel. Fans shall be supplied with VFD and TEFC, premium duty motor suitable for VFD drive. Refer to Data Sheet M-DS-K- 00123 for the Fan performance requirements.

3.2.2.3 Fan Isolation Dampers (DMP-021, 022, and 023) - SC

The fan Isolation Dampers shall be provided with an electric actuator. The dampers shall be stainless steel. The damper shall be designed and constructed in accordance with ASME AG-1, Section DA. The seat and frame leakage shall meet the requirements of ASME AG-1, Section DA, for Leakage Class I for seat and Class B for frame.

3.2.2.4 Tornado Dampers (DMP-031) - SC

The Tornado Dampers shall be designed for counter balance to actuate and isolate based on tornado pressure to prevent the transmission of tornado pressure surge. The damper shall be stainless steel. The damper shall be designed and constructed in accordance with ASME AG-1, Section DA. The seat and frame leakage shall meet the requirements of ASME AG-1, Section DA, for Leakage Class I for seat and Class B for frame.

3.2.2.5 Slide Gate Dampers (DMP-015 through 020) - SC

The Slide Gate Dampers shall be provided to manually isolate the fans during maintenance. The dampers shall be stainless steel. The damper shall be designed and constructed and tested in accordance with ASME AG-1, Section DA. The seat and frame leakage shall be zero leakage.

3.2.2.6 Fire Resistance Duct Wraps - SS

The exhaust ducts penetrating through fire barriers shall be provided with the 3 hour rated, Fire Resistance Duct Wraps shall be 3M™ FastMaster® Duct Wrap, 1.5" thick. Fire Resistance Duct wraps shall be installed 10 feet, on each side of the wall, on the duct penetrating the fire barriers. It is assumed that there will be approximately 30 fire barrier penetrations.

3.2.2.7 Ductwork and Accessories - SC

The Exhaust air ductwork and accessories shall be Stainless steel. Ductwork shall be constructed and tested in accordance with the requirement in ASME AG-1, Section SA and shall meet Level 5 requirements for the leak tightness.

3.2.3 Glovebox Exhaust System

The Glovebox Exhaust Air System provides exhaust ventilation to protect facility personnel from in-process radioactive and hazardous materials. This system also provides confinement ventilation that minimizes the spread of potentially airborne radiological and chemical contaminants within the facility and to the environment and limits personnel exposure within the ALARA guidelines. The Glovebox Exhaust will be exhausted through redundant HEPA Filter Housings and then routed to Sand Filter and Exhaust Fan-house to a stack.

3.2.3.1 The Glovebox Exhaust Air System Components - Refer to P&ID # M-M6-K-02293 and Air Flow Diagram # M-M5-K-01970 for The Glovebox Exhaust Air System. The major components for this system are:

A. Glovebox HEPA Filter Housings (2 Each)
B. Glovebox Exhaust Air Fans (2 Each)
C. Isolation Dampers (2 Each)
D. Slide Gate Isolation Dampers (2 Each)
E. Ductwork and Accessories (See Att. 7.1 for Bulk Material Quantities)

3.2.3.2 Glovebox HEPA Filter Housings (FLT-001 and 002) - SS

The HEPA Filter Housing includes inlet Isolation Valve, Fire Screen, pre-filter, HEPA Filter and outlet isolation damper. Refer to Data Sheet M-DS-K- 00126 for the performance requirements.

3.2.3.3 Glovebox HEPA Filter Housings Exhaust Fans (FAN- 004 and 005) - SS

The Glovebox Exhaust Air Fans shall be minimum class III, SWSI Centrifugal Fans. The fans shall be direct drive and fan housing shall be constructed of minimum 10 gauge Stainless steel. Fans shall be supplied with VFD and TEFC, premium duty motor, suitable for VFD drive. Refer to Data Sheet M-DS-K- 00124 for the Fan performance requirements.

3.2.3.4 Slide Gate Dampers (DMP-033 and 034) - SS

The Slide Gate Dampers shall be provided to manually isolate the fans during maintenance. The dampers shall be stainless steel. The damper shall be designed and constructed and tested in accordance with ASME AG-1, Section DA. The seat and frame leakage shall be zero leakage. The Dampers shall be AMCA tested.

3.2.3.5 Fan Isolation Dampers (DMP-028, 029, and 030) - SS

The fan Isolation Dampers shall be provided with an electric actuator. The dampers shall be stainless steel. The damper shall be designed and constructed in accordance with ASME AG-1, Section DA. The seat and frame leakage shall meet the requirements of ASME AG-1, Section DA, for Leakage Class I for seat and Class B for frame. The Dampers shall be AMCA tested.

3.2.3.6 Ductwork and Accessories - SS

The Glovebox Exhaust air ductwork and accessories shall be Stainless steel. Ductwork shall be constructed and tested in accordance with the requirement in ASME AG-1, Section SA and shall meet Level 4 requirements for the leak tightness.

3.2.4 Non-Process Area HVAC System

Non-Process Area HVAC Systems are recirculating type systems which provides conditioned air to non-process areas, such as Can-in-Canister loading, storage and Transportation Area, Entry Control Facility (ECF), NDA Room etc. to maintain proper environmental control for the health, safety, and comfort of the operating personnel and for equipment protection.

3.2.4.1 Non-Process Area HVAC Supply Air System Components - The major components in these systems are:

A. Air Handling Units (3 Each)
B. Isolation Dampers (3 Each)
C. Ductwork and Accessories (See Att. 7.1 for Bulk Material Quantities)

3.2.4.2 Air Handling Unit for Canister Loading, storage and Transfer Area (AHU-006) - PS

Air Handling Unit shall be packaged type complete with combination filter mixing box (include motorized dampers, mixing box and medium efficiency filter), chilled water cooling coil, electric heating coil and BI centrifugal, direct drive, fan. Refer to M-DS-K-00125 for performance requirements.

3.2.4.3 Air Handling Unit for ECF Area (AHU-005) - PS

Air Handling Unit shall be packaged type complete with combination filter mixing box (include motorized dampers, mixing box and medium efficiency filter), chilled water cooling coil, electric heating coil and BI centrifugal, direct drive, fan. Refer to M-DS-K-00122 for performance requirements.

3.2.4.4 Air Handling Unit for NDA Room (AHU-004) - PS

Air Handling Unit shall be packaged type complete with combination filter mixing box (include motorized dampers, mixing box and medium efficiency filter), chilled water cooling coil, electric heating coil and BI centrifugal, direct drive, fan. Refer to M-DS-K-00121 for performance requirements.

3.2.4.5 AHU Isolation Dampers (DMP-TBD) - PS

Each of the AHU Isolation Dampers shall be provided with an electric actuator. The damper shall be galvanized carbon steel. The damper shall be designed and constructed in accordance with ASME AG-1, Section DA. The seat and frame leakage shall meet the requirements of ASME AG-1, Section DA, for Leakage Class III for seat and Class C for frame.

3.2.4.6 Ductwork and Accessories - PS

The ductwork and accessories shall be galvanized carbon steel. Ductwork shall be constructed and tested in accordance with the requirement in ASME AG-1, Section SA and shall meet Level 2 requirements for the leak tightness.

3.3 Instrumentation and Controls

3.3.1 The 3 supply AHUs will be controlled by the ICS (J-SOW-K-00002). For each AHU this will include the supply fan variable speed drive, the chilled water supplied cooling coil, the electric preheat coil and the steam supplied humidifier.

3.3.2 Each AHU will be furnished as a skid containing the following vendor supplied instruments and control panels:

3.3.2.1 VFD control panel (1)

3.3.2.2 Preheater instruments:

A. Control panel (1)
B. Temperature element (2)
C. Temperature transmitter (1)
D. Temperature indicator (1)
E. Low flow switch (1)

3.3.2.3 Humidifier Control Panel

3.3.2.4 Differential pressure instruments:

A. Low efficiency roll filter ΔP indicator (1)
B. Low efficiency roll filter high ΔP switch (1)
C. Moderate efficiency filter ΔP indicator (1)
D. Moderate efficiency filter high ΔP switch (1)

3.3.3 The power feed for each supply fan will have a SC (shutdown) interlock originated by the Main Exhaust System Control Panel.

3.3.4 The cooling coils for each AHU will be supplied chilled water via a common chilled water control valve controlled by the ICS.

3.3.5 Each of the 3 supply air isolation dampers will be controlled by the ICS and will be furnished with the following vendor supplied switches:

A. Damper open limit switch (1)
B. Damper closed limit switch (1)

3.3.6 The common supply air duct will contain the following instruments which interface with the ICS:

3.3.6.1 Temperature instruments:

A. Temperature element (1)
B. Temperature transmitter (1)

3.3.6.2 Humidity instruments:

A. Humidity element (1)
B. Humidity transmitter (1)

3.3.6.3 Pressure instruments:

A. Pressure element (1)
B. Pressure transmitter (1)

3.3.7 Each of the 2 glovebox exhaust fans will be furnished with a vendor supplied VFD control panel.

3.3.8 The glovebox exhaust fans will be controlled by a common Glovebox Exhaust System Control Panel. Major components included within the control panel include independent flow controllers, logic solvers and power supplies.

3.3.9 The power feed for each glove box fan will have a SC (shutdown) interlock originated by the Main Exhaust System Control Panel.

3.3.10 Each of the 2 glovebox exhaust isolation dampers will be controlled by the Glovebox Exhaust System Control Panel and will be furnished with the following vendor supplied switches:

A. Damper open limit switch (2)
B. Damper closed limit switch (2)

3.3.11 Each of the 2 glovebox exhaust filter units will be furnished with the following vendor supplied differential pressure instruments:

A. Low efficiency filter ΔP indicator (1)
B. Low efficiency filter high ΔP switch (1)
C. HEPA filter ΔP indicator (1)
D. HEPA filter high ΔP switch (1)

3.3.12 Each of the 2 glovebox exhaust fan ducts will contain the following differential pressure instruments:

A. Fan suction ΔP indicator (1)
B. Fan discharge ΔP indicator (1)

3.3.13 The common glovebox exhaust air duct will contain the following flow instruments which input to the Glovebox Exhaust System Control Panel:

A. Flow element (2)
B. Flow transmitter (2)

3.3.14 Each of the 3 main exhaust fans will be furnished with a vendor supplied VFD control panel.

3.3.15 The main exhaust fans will be controlled by either of the two (independent) Main Exhaust System Control Panels. These panels will contain the following major components, pressure indicating controllers (2), logic solvers (2) and power supplies (2)

3.3.16 The 105-K building will contain 4 (2 per channel) differential pressure indicating transmitters which input to the Main Exhaust System Control Panel. Each of the two (2) SC differential pressure transmitter channels will contain the following components:

A. Static (outside) atmosphere probe (1ea.)
B. Pressure averaging chamber (1 ea.)
C. Atmospheric sensor expansion tank (1 ea.)
D. Static (inside) pressure probe (4 ea.)
E. Sensing lines, 1/2" PS206B Tubing (1000 ft)

3.3.17 Each of the 3 main exhaust isolation dampers will be controlled by the Main Exhaust System Control Panel and will be furnished with the following vendor supplied switches:

A. Damper open limit switch (2)
B. Damper closed limit switch (2)

3.3.18 Each of the 3 main exhaust fan ducts will contain the following differential pressure instruments:

A. Fan suction ΔP indicator (1)
B. Fan discharge ΔP indicator (1)

3.3.19 Each of the 2 tornado dampers will be furnished with the following vendor supplied switches:

A. Damper open limit switch (2)
B. Damper closed limit switch (2)

3.3.20 The sand filter will contain the following differential pressure instruments:

A. Inlet ΔP indicating transmitter (1)
B. Discharge ΔP indicating transmitter (1)

3.3.21 The status of the SS glovebox exhaust system and the SC main exhaust air system components, tornado damper limit switches and isokinetic particulate sampling system channels will be monitored by the ICS. The following isolators will be used to electrically isolate the SC/SS components from the PS ICS:

A. Digital signal isolators (44)
B. Analog signal isolators (20)

3.3.22 Each of the 2 isokinetic particulate sampling system channels will be furnished as skids containing the following vendor supplied instruments and components:

A. Isokinetic sampling array (1)
B. Vacuum pump (1)
C. Power supply (1)
D. Velocity profiler (1)
E. Stack flow totalizer (1)
F. Linear mass flow meter (1)
G. Sampler flow totalizer (1)
H. Alarm module (2)
I. Flow control valve (1)
J. Particulate CAM (1)

3.3.23 Unless noted otherwise, instruments denoted as vendor supplied are part of Engineered Equipment packages/skids, and thus do not required (separate) installation by Construction.

3.3.24 Provide interface wiring for HVAC instruments & controls detailed within this SOW. Bulk cable and raceway quantities are summarized in Attachment 7.4

3.3.25 All instruments and controls associated with the SC main exhaust system are to be installed in accordance with Channel/Train separation requirements delineated in IEEE 384,

3.4 Electrical

3.4.1 Process Area HVAC Supply Air System Component Electrical Power – Refer S/L Diagrams E-E2-K-02232 and E-E2-K-02233.

3.4.1.1 Provide electrical power feeds to supply fan HVAC-AHU-001 from ELNH-MCC-11M, Cubicle 4D, pre-heater HVAC-HCL-001 from substation breaker #M-11 in Transformer Room #1 at 0' Level and dampers from panel ELLV-PNL-013.

3.4.1.2 Provide electrical power feeds to supply fan HVAC-AHU-002 from ELNH-MCC-11M, Cubicle 5A, pre-heater HVAC-HCL-002 from substation breaker #M-42 in Transformer Room #4 at 0' Level and dampers from panel ELLV-PNL-013.

3.4.1.3 Provide electrical power feeds to supply fan HVAC-AHU-003 from ELNH-MCC-11M, Cubicle 3A, pre-heater HVAC-HCL-003 from substation breaker #M-38 in Transformer Room #3 at 0' Level and dampers from panel ELLV-PNL-013.

3.4.1.4 Provide electrical power feeds to duct heaters HVAC-EHTR-001 through HVAC-EHTR-031 which are located on -20' & -40' Level from motor control center ELNH-MCC-18M located in Electrical Room #2 at -20' Level refer to HVAC Duct Heater Layout M-M5-K-01952 & M-M5-K-01953.

3.4.2 Process Area HVAC Exhaust Air System Component Electrical Power – Refer S/L Diagrams E-E2-K-02236, E-E2-K-02237, E-E2-K-02238 & E-E2-K-02239:
All electrical power covered in this section for the Exhaust Air System is classified as Safety Class (SC) and shall meet all appropriate requirements.

3.4.2.1 Provide electrical power feed to Exhaust Air Fan HVAC-FAN-001 from 480V switchgear bus no. 1, ELNH-SWGR-001 through variable frequency speed drive HVAC-VFD-001.

3.4.2.2 Provide electrical power feed to Exhaust Air Fan HVAC-FAN-002 from 480V switchgear bus no. 2, ELNH-SWGR-002 through variable frequency speed drive HVAC-VFD-002.

3.4.2.3 Provide electrical power feed to Exhaust Air Fan HVAC-FAN-003 from 480V switchgear bus no. 3, ELNH-SWGR-003 through variable frequency speed drive HVAC-VFD-003.

3.4.2.4 Provide electrical power feed to Isolation Damper HVAC-DMP-021 for exhaust fan HVAC-FAN-001 from motor control center ELNH-MCC-001.

3.4.2.5 Provide electrical power feed to Isolation Damper HVAC-DMP-022 for exhaust fan HVAC-FAN-002 from motor control center ELNH-MCC-002.

3.4.2.6 Provide electrical power feed to Isolation Damper HVAC-DMP-023 for exhaust fan HVAC-FAN-003 from motor control center ELNH-MCC-003.

3.4.2.7 Provide electrical power feed to fan room #1 exhaust fan HVAC-FAN-006 from motor control center ELNH-MCC-001.

3.4.2.8 Provide electrical power feed to diesel generator room #1 exhaust fan HVAC-FAN-011 from motor control center ELNH-MCC-001.

3.4.2.9 Provide electrical power feed to room heater in fan room #1 HVAC-HTR-001 from motor control center ELNH-MCC-001.

3.4.2.10 Provide electrical power feed to room heater in diesel generator room #1 HVAC-HTR-004 from motor control center ELNH-MCC-001.

3.4.2.11 Provide electrical power feed to fan room #2 exhaust fan HVAC-FAN-008 from motor control center ELNH-MCC-002.

3.4.2.12 Provide electrical power feed to diesel generator room #2 exhaust fan HVAC-FAN-010 from motor control center ELNH-MCC-002.

3.4.2.13 Provide electrical power feed to room heater in fan room #2 HVAC-HTR-003 from motor control center ELNH-MCC-002.

3.4.2.14 Provide electrical power feed to room heater in diesel generator room #2 HVAC-HTR-005 from motor control center ELNH-MCC-002.

3.4.2.15 Provide electrical power feed to fan room #3 exhaust fan HVAC-FAN-007 from motor control center ELNH-MCC-003.

3.4.2.16 Provide electrical power feed to control room exhaust fan HVAC-FAN-009 from motor control center ELNH-MCC-003.

3.4.2.17 Provide electrical power feed to room heater in fan room #3 HVAC-HTR-002 from motor control center ELNH-MCC-003.

3.4.2.18 Provide electrical power feed to control room heater HVAC-HTR-006 from motor control center ELNH-MCC-003.

3.4.2.19 Provide electrical power feeds to access room heaters HVAC-HTR-007 & HVAC-HTR-008 from motor control center ELNH-MCC-003.

3.4.2.20 Provide 120V electrical branch power circuits to train #1 controls from UPS power ELLV-UPS-001. Consider minimum 5 – 20A, 120V circuits.

3.4.2.21 Provide 120V electrical branch power circuits to train #2 controls from UPS power ELLV-UPS-003. Consider minimum 5 – 20A, 120V circuits.

3.4.2.22 Provide 120V electrical branch power circuits to common fan controls from UPS power ELLV-UPS-003. Consider minimum 5 – 20A, 120V circuits.

3.4.3 Glovebox Exhaust System Electrical Power - Refer to S/L Diagram E-E2-K-02240: Electrical Power required for the Glovebox exhaust system is classified as Safety Significant (SS) and shall meet all appropriate requirements.

3.4.3.1 Provide electrical power feed to Glovebox Exhaust Fan HVAC-FAN-004 from ELNH-MCC-012E, Cubicle 2A through variable frequency speed drive located at the fan motor.

3.4.3.2 Provide 120V, 20A circuit for the Isolation damper for HVAC-FAN-004 from UPS power panel located on -20' Level ELLV-PNL-2.

3.4.3.3 Provide electrical power feed to Glovebox Exhaust Fan HVAC-FAN-005 from ELNH-MCC-012E, Cubicle 2C through variable frequency speed drive located at the fan motor.

3.4.3.4 Provide 120V, 20A circuit for the Isolation damper for HVAC-FAN-005 from UPS power panel located on -20' Level ELLV-PNL-2.

3.5 Plant Design

3.5.1 Ductwork quantities have been estimated in attachment 7.1.

3.6 Civil/Structural/Architectural

3.6.1 The C/S/A scope of work required for installation of supports for the major components and ducts of the Heating Ventilating and Air Conditioning (HVAC) Systems is as follows:

3.6.2 Duct Work.
There are two floors, -20 Level and -40 Level, of KAC building served by the HVAC Duct system. The HVAC Duct supports on -20 Level will be attached to the concrete ceiling above -20 Level floor. The supply ducts size greater than 45" wide and all the exhaust ducts will be supported on the rigid frame made of TS 3 x 3 x 0.25, which will be welded to 9" x 9" x ½" thick base plates. Each base plate will be anchored with ½" diameter bolts to the concrete ceiling.
The remaining supply ducts (smaller than 45" wide) will be supported on the structural steel angles of different sizes which will be hanged with 5/8" diameter threaded rods on the brackets. Each bracket will be welded to 10" x 4" x ½" thick base plate. Each Base plate will be anchored with ½" diameter bolts to the concrete ceiling above -20 Level floor.

3.6.3 Air Handling Units [3]
The size of each Air Handling Unit is approximately 33' X 16' X 10' high and each weighs approximately 60000 lbs. Each AHU is supplied with a structural steel base for mounting which will be anchored with ½ " diameter bolts to the concrete floor at the 0 Level.

3.6.4 Exhaust air Fans (3)
The size of each fan is approximately 7' X 5' X 9'-6" high and each weighs approximately 6400 lbs. Each fan is supplied with a mounting frame at the base with 7- 11/16" diameter mounting holes. It will be anchored with 5/8" diameter bolts on concrete floor of the fan house.

3.6.5 Glovebox HEPA Filter Housing (2)
The size of each Glovebox is approximately 15' X 4'-6" X 7' high and each box weighs approximately 7200 lbs. Each Glovebox is supplied with a mounting frame of structural steel at the base with 28- 9/16" diameter mounting holes. It will be anchored with ½" diameter bolts on concrete floor at the -20 Level.

4.0 ASSUMPTIONS

4.1 General Assumptions

4.1.1 The Construction Agency will be the SRS Construction Group. DS will provide engineering documentation for the installation of this equipment and will rely on the use of SRS Guides and Standards.

4.1.2 SRS Construction Group will procure all bulk materials.

4.1.3 SRS Construction Group will fabricate and install all ductwork, accessories, and supports.

4.2 Specific Assumptions

4.2.1 Mechanical

4.2.1.1 It is assumed that exhaust duct will penetrate approximately 30 fire barriers. The duct penetrating these barriers will be provided with Fire Resistance Duct Wraps. Fire Resistance Duct wraps will be installed 10 feet, on each side of the wall, on the duct penetrating the fire barriers.

4.2.2 Instrumentation

4.2.1.1 It is assumed that the placement of the 105-K building differential pressure indicating transmitters, static (outside) atmosphere probes, pressure averaging chambers and atmospheric sensor expansion tanks, quantity and routing of tubing, will be similar to that for CLWR-TEF.

4.2.1.2 It is assumed the isokinetic particulate sampling system channels will be similar to those for 241-81H.

4.2.3 Electrical

4.2.3.1 Safety Class (SC) power will be used only for the Exhaust Fan System at Sand Filter Fan House Building. Power for the Glovebox exhaust fans will be SS. No SC class power will be provided in KAC process building except for the controls of Safety Class equipment. This power will be provided from the fan house building Electrical Power Distribution System.

4.2.4 Plant Design

4.2.4.1 Since duct layout is not complete, 20% of additional weights are added in the total duct weights.

4.2.5 Civil/Structural/Architectural

4.2.5.1 Core drills will be required for routing electrical conduit through walls or floors.

4.2.5.2 Assume all anchor bolts used for equipment and commodity supports will be A36 Drillco Maxi bolts. Alternatively, Hilti Kwik Bolts -TZ are acceptable for anchoring items.

4.2.5.3 Assume Functional Classification for drilling holes in concrete surface is SC.

4.2.5.4 For Standard HVAC Duct support and details, Use cookbook C-CL-G-0001, Rev. 3

4.2.5.5 Any components inside any equipment like AHU, Glove Box etc. are the integral parts of this equipment as one unit.

4.2.5.6 The average spacing between the HVAC Duct supports will conservatively be assumed to be 6 feet. All the HVAC Ducts supports outside the KAC building are excluded from this scope.

4.2.5.7 The supports for the Exhaust fans to the floor of the new Exhaust fan-house building is included in the estimate.

4.2.5.8 The material for all the base plates and structural steel components shall be galvanized carbon steel.

5.0 Technology Development Issues

There are currently no technology issues for the HVAC systems.

6.0 REFERENCES

6.1 Drawing List

6.1.1 PUD Project Drawings & Sketches

6.1.1.1 M-M5-K-01952 - HVAC- Supply Air, Elevation -40, Air Flow Diagram
6.1.1.2 M-M5-K-01953 - HVAC- Supply Air, Elevation -20, Air Flow Diagram
6.1.1.3 M-M5-K-01954 - HVAC- Exhaust Air, Elevation -40, Air Flow Diagram
6.1.1.4 M-M5-K-01955 - HVAC- Exhaust Air, Elevation -20, Air Flow Diagram
6.1.1.5 M-M5-K-01956 - HVAC- Exhaust Air, Fan House and Sand Filter, Air Flow Diagram
6.1.1.6 M-M5-K-01957 - HVAC- Exhaust and Supply Air, Air Flow Diagram
6.1.1.7 M-M6-K-02310 - HVAC- Supply Air, Piping and Instrumentation Diagram
6.1.1.8 M-M5-K-02311 - HVAC- Exhaust Air, Piping and Instrumentation Diagram
6.1.1.9 M-M5-K-01970 - Glovebox Exhaust System, Air Flow Diagram
6.1.1.10 M-M6-K-02293 - Glovebox Exhaust System, Piping and Instrumentation Diagram
6.1.1.11 E-E2-K-02232 – Single Line Diagram - Motor Control Center ELNH-MCC-11M
6.1.1.12 E-E2-K-02233 – Single Line Diagram - Motor Control Center ELNH-MCC-18M
6.1.1.13 E-E2-K-02236 – Single Line Diagram - 13.8KV-480V SWITCHGEAR
6.1.1.14 E-E2-K-02237 – Single Line Diagram – MCC - 001
6.1.1.15 E-E2-K-02238 – Single Line Diagram – MCC - 002
6.1.1.16 E-E2-K-02239 – Single Line Diagram – MCC – 003
6.1.1.10 J-J8-K-00032 – HVAC Control Block Diagram
6.1.1.11 J-J8-K-00027 – Stack Radiation Monitoring System Layout

6.2 Design Input Documents

The following Facility Design Description and System Design Descriptions are the baseline documents used to develop this SOW.

6.2.1 Facility Design Description

6.2.1.1 G-FDD-K-00001, Rev B, "PUV Facility Design Description"

6.2.2 System Design Description

6.2.2.1 M-SYD-K-00005, Rev. C, "HVAC System (HVAC) SDD"

6.3 Applicable SRS & Industry Codes, Guides and Standards

6.3.1 Industry Codes and Standards

6.3.1.1 ASME AG-1, Code for Nuclear Air and Gas Treatment
6.3.1.2 ASHRAE Handbooks - HVAC Fundamentals, Applications, systems
6.3.1.3 NFPA 90B, Standard for the Installation of Warm Air Heating and Air Conditioning Systems
6.3.1.4 IEEE-306 - Standard Installation, Inspection, and Testing Requirements for Power, Instrumentation, and Control Equipment at Nuclear Facilities
6.3.1.5 IEEE-338 - Standard Criteria for the Periodic Surveillance Testing of Nuclear Power Generating Station Safety Systems
6.3.1.6 IEEE-379 - Standard Application of the Single-Failure Criterion to Nuclear Power Generating Station Safety Systems
6.3.1.7 IEEE-383 - Type test of Class 1E Electric Cables, Field Splices and Connections for Nuclear Power Generating Stations
6.3.1.8 IEEE-384 - Standard Criteria for Independence of Class 1E Equipment and Circuits
6.3.1.8 IEEE-577 - Standard Requirements for Reliability Analysis in the Design and Operation of Safety Systems for Nuclear Facilities
6.3.1.9 IEEE-603 - Standard Criteria for Safety Systems for Nuclear Power Generating Stations
6.3.1.10 ANSI/ISA-S67.04 - Methodologies for the Determination of Setpoints for Nuclear Safety-Related Instrumentation
6.3.1.11 ANSI/AMSE AG-1-2003 - Code on Nuclear Air and Gas Treatment

6.3.1.12 NFPA 70 (2005 edition), National Electrical Code

6.3.2 SRS Guides & Standards

6.3.2.1 SRSESM 16051-G Rev. 2, Installation of Electrical Raceway Systems and Cable Trays
6.3.2.2 SRSESM 16052-G Rev. 3, Installation of Electrical Wires, Cables and Termination
6.3.2.3 SRSESM 16053-G, Rev. 2, Installation of Electrical Equipment
6.3.2.4 SRSESM 16056-G Rev 2, Installation of Grounding Systems
6.3.2.5 SRSESM 15980, Rev. 0, "Mechanical Installation of Safety Class and Safety Significant Instrumentation"
6.3.2.6 SRSESM 01703, "Application of ISA S84-01 for SRS Non-Reactor Facilities"
6.3.2.7 SRSESM 01061, "Qualification of Systems, Equipment & Components for Natural Phenomena Hazards"
6.3.2.8 Engineering Guide 01703-G, "Design Guidance for Instrumented Systems That Are Used in Safety Significant and Hazardous Processes"

6.4 Related Scopes of Work (SOW)

6.4.1 M-SOW-K-00022, Balance of Plant - Water System - This related SOW provides the Chilled Water Requirements.

6.4.2 F-SOW-K-00001, Fire Protection System - This related SOW provides the Fire Protection Requirements.

6.4.3 E-SOW-K-00017, Electrical Power Supply System - This related SOW provides the Electrical Power Requirements for all classes of power SC, SS and PS/GS.

6.4.4 J-SOW-K-00002, Integrated Control System/Control Room- Instrumentation and controls for these systems will be connected to the ICS and Control Room as described in this related SOW.

6.4.5 C-SOW-K-00009, Structural and Architectural Modifications for the K-Area Complex

6.4.6 C-SOW-K-00010, Structural and Architectural Modifications Outside the PIDAS

6.5 Miscellaneous

6.5.1 None

7.0 ATTACHMENTS

7.1 Attachment 7.1, Mechanical HVAC Ductwork Bulk Material List (1 Page)
7.2 Attachment 7.2, Electrical and I&C Bulk Material List (2 Pages)
7.3 Attachment 7.3, C/S/A Bulk Material List (1 Page)

ATTACHMENT 7.1

HVAC Duct Material Summary Report

HVAC Ductwork Bulk Material - Summary Table

Supply System Duct - Galvanized Steel

System	Description	Material	Weight - Lbs.	Insul. Matl	Ins Thk - inches
SUPPLY	DUCT - RECTANGULAR	GALVANIZED STEEL	78,135	GLASS WOOL	2
SUPPLY	FITTINGS - RECT.	GALVANIZED STEEL	10,664	GLASS WOOL	2
TOTAL WEIGHT---------->			88,799		
ADD 20% SEE NOTE BELOW---------->			17759.8		
**TOTAL WEIGHT (Galvanized Steel) ---------->			**106,559**		

Exhaust System Duct - Stainless Steel

System	Description	Material	Weight - Lbs.	Insul. Matl	Ins Thk - inches
EXHAUST	DUCT - ROUND	STAINLESS STEEL	27,836	NONE	N/A
EXHAUST	FITTINGS - ROUND	STAINLESS STEEL	4,083	NONE	N/A
TOTAL WEIGHT---------->			31,919		
ADD 20% SEE NOTE BELOW---------->			6383.8		
**TOTAL WEIGHT (Stainless Steel)---------->			**38,303**		

Note: This duct report is based on approximately 80% of the duct Layout. Therefore additional 20% of the weight is added

ATTACHMENT No. 7.2
(Bulk Material Summary)

Scope Set: HVAC

Date: 4/12/07

Prepared By: Suman Shah

Reviewed By: R. King

Cables

Sum of Qty XGB (ft)	
Ext. Cable Size/Type	Total
1/C 500kcmil	5,610
1/C #1/0 GND	1,870
1PR #16 TWSH	13,425
3/C #4/0	360
3/C #12 w/gnd	4,170
5/C #14 w/gnd	8,220
3/C #10 w/gnd	4,390
3/C #2 w/gnd	420
2/C #12 w/gnd	4,400
1/C-500kcmil	1,080
1/C #2/0 GND	360
7/C #16	4,760
2PR #16 TWSH	3,500
Grand Total	52,565

Interior Glovebox Cables

Sum of Qty NGB (ft)	
GB Cable Size/Type	Total
Grand Total	

All Raceway Types

Sum of Qty Rcwy (ft)	
RCWY	Total
1" IMC	3,720
2" IMC	760
3/4" IMC	11,065
3" RGS	1,990
	0
Grand Total	17,535

All Raceway Types Grouped by SC Designation

Sum of Qty Rcwy (ft)		
SC	RCWY	Total
N	1" IMC	3,000
	2" IMC	760
	3/4" IMC	5,750
	3" RGS	1,750
N Total		11,260
Y	1" IMC	720
	3/4" IMC	5,315
	3" RGS	240
Y Total		6,275
Grand Total		17,535

ATTACHMENT No. 7.2

(Bulk Material Backup Data)

Description: HVAC System Bulk Materials, Cable and Conduit
Reference: E-E2-K-02232, E-E2-K-02233, E-E2-K-02236, E-E2-K-02237, E-E2-K-02238, E-E2-K-0039, J-J8-K-00027, J-J8-K-00032

Item #	From Equipment	To Equipment	Cable Estimates (Exterior GB)			Shared Rcwy/Tray	Raceway Estimates				
			XGB Length (A) (ft)	Qty (A)	Cable size/type	Length (C) (ft)	Length (D) (ft)	Qty (D)	Size/Desc. (D)	SC	Notes/Comments
1	ELNH-MCC-11M,4D	HVAC-AHU-001,2&3	120	3	3/C #4/0	0	100	3	2" IMC	N	Production Support
2	ICS - CAB	HVAC-AHU-001,2&3	120	3	7/C #16	0	100	3	3/4" IMC	N	Production Support
3	ICS - CAB	HVAC-AHU-001,2&3	120	15	2PR #16 TWSH	0	100	3	2" IMC	N	Production Support
4	TRANS#1-M14	HVAV-HCL-001	95	6	1/C 500kcmil	0	75	2	3" RGS	N	Production Support
			95	2	1/C #1/0 GND	75	0	0		N	Production Support
5	TRANS#1-M42	HVAV-HCL-002	320	6	1/C 500kcmil	0	300	2	3" RGS	N	Production Support
			320	2	1/C #1/0 GND	300	0	0		N	Production Support
6	TRANS#3-M38	HVAV-HCL-003	520	6	1/C 500kcmil	0	500	2	3" RGS	N	Production Support
			520	2	1/C #1/0 GND	500	0	0		N	Production Support
7	ELNH-MCC-18M	HVAC-EHTR-001X	260	15	3/C #12 w/gnd	140	100	15	1" IMC	N	Production Support
			260	15	5/C #14 w/gnd	240	0	0		N	Production Support
8	ELNH-MCC-18M	HVAC-EHTR-002X	260	15	3/C #10 w/gnd	140	100	15	1" IMC	N	Production Support
	ELNH-MCC-18M	HVAC-EHTR-002X	260	15	5/C #14 w/gnd	240	0	0		N	Production Support
9	ELNH-MCC-18M, 2E	HVAC-EHTR-020	420	1	3/C #2 w/gnd	240	160	1	2" IMC	N	Production Support
	ELNH-MCC-18M, 2E	HVAC-EHTR-020	420	1	5/C #14 w/gnd	400	0	0		N	Production Support
10	ELLV-PNL-XXX	DAMPERS	220	20	2/C #12 w/gnd	100	100	20	3/4" IMC	N	Production Support
11	ICS - CAB	DAMPERS	220	20	7/C #16	100	100	20	3/4" IMC	N	Production Support
12	ELNH-MCC-12E,2A	HVAC-FAN-004	245	1	3/C #10 w/gnd	75	150	1	3/4" IMC	N	Safety Significant
13	ELNH-MCC-12E,2C	HVAC-FAN-005	245	1	3/C #10 w/gnd	75	150	1	3/4" IMC	N	Safety Significant
14	ELNH-SWGR-001	HVAC-FAN-001	60	6	1/C-500kcmil	0	40	2	3" RGS	Y	Safety Class
			60	2	1/C #2/0 GND	40	0	0			
15	ELNH-SWGR-002	HVAC-FAN-002	60	6	1/C-500kcmil	0	40	2	3" RGS	Y	Safety Class
			60	2	1/C #2/0 GND	40	0	0			
16	ELNH-SWGR-003	HVAC-FAN-003	60	6	1/C-500kcmil	0	40	2	3" RGS	Y	Safety Class
			60	2	1/C #2/0 GND	40	0	0			
17	Stack Monitor	Central Contol Rm	1095	2	1PR #16 TWSH	525	550	2	3/4" IMC	Y	Safety Class
18	Fan House CR	105K DP x-mitters	905	4	1PR #16 TWSH	525	360	2	1" IMC	Y	Safety Class
19	Fan House CR	HVAC-AHU-001-003 INTLK	1285	2	1PR #16 TWSH	525	740	2	3/4" IMC	Y	Safety Class
20	Fan House CR	HVAC-DMP-031	1225	2	1PR #16 TWSH	525	680	2	3/4" IMC	Y	Safety Class
21	Fan House CR	GB HEPA FTR RM	1045	1	1PR #16 TWSH	525	500	2	3/4" IMC	Y	Safety Class
22	Fan House CR	HVAC-FAN-001, -002, -003	85	6	1PR #16 TWSH	30	35	3	3/4" IMC	Y	Safety Class
23	Fan House CR	HVAC-DMP-021, -022, -023	85	6	1PR #16 TWSH	30	35	3	3/4" IMC	Y	Safety Class
24	Fan House CR	HVAC-DMP-027	65	2	1PR #16 TWSH	30	15	3	3/4" IMC	Y	Safety Class
25	Fan House CR	FH UPS	50	4	3/C #12 w/gnd	0	30	4	3/4" IMC	Y	Safety Class
26	GB HEPA Filter RM	HVAC-FAN-004, -005	50	4	1PR #16 TWSH	0	30	2	3/4" IMC	N	Safety Significant
27	GB HEPA Filter RM	HVAC-DMP-032, -033	50	4	1PR #16 TWSH	0	30	2	3/4" IMC	N	Safety Significant
28	GB HEPA Filter RM	GB UPS	35	2	3/C #12 w/gnd	0	15	2	3/4" IMC	N	Safety Significant
29	ICS - CAB	MISC. Instr.	170	10	2PR #16 TWSH	50	100	10	3/4" IMC	N	Production Support

ATTACHMENT 7.3
C/S/A Bulk Material List for HVAC System

Item No.	Description of Item	Size of Item	Total Quantity	Remarks
1	Structural Steel L	L 2 x 2 x ¼	1050 Ft.	
2	Structural Steel L	L 3 x 3 x ¼	350 Ft.	
3	Structural Steel L	L 4 x 4 x ¼	2200 Ft.	
4	Tube Steel	TS 3 x 3 x 0.25	1860 Ft.	
5	Threaded Rod	5/8" Diameter	3160 Ft.	
6	Rod Brackets	For 5/8" Diameter	980 Ea.	
7	Base Plates	10" x 4" x ½" Thick	980 Ea.	
8	Base Plates	9" x 9" x ½" Thick	724 Ea.	
9	Bolts	½" Diameter	4730 Ea.	
10	Bolts	5/8" Diameter	12 Ea.	

PLUTONIUM DISPOSITION PROJECT (U)

Project M09A

SCOPE OF WORK

M-SOW-K-00021 Revision 0

for

Balance of Plant – Air Systems (U)

Originated by: _____ Date: 4/9/07
Suresh Soorma
Senior Mechanical Engineer

Reviewed by: _____ Date: 4/9/07
Arun Amin
Senior Mechanical Engineer

Approved by: _____ Date: 4/11/07
Clayton Holloway
Mechanical Lead

Approved by: _____ Date: 4/10/07
Roderick King
Electrical/I&C Lead

Approved by: _____ Date: 4/10/07
Ghada Elchoufi
C/S/A Lead

Approved by: _____ Date: 4-10-07
Drew Negus
Plant Design Lead

Approved by: _____ Date: 4-9-07
John Hammond
Construction/CDI Lead

Approved by: _____ For Date: 11 APR 07
Randy Sears
Design Authority Engineer

Approved by: _____ Date: 4/11/07
B.C. Patel
Project Engineer

UNCLASSIFIED
DOES NOT CONTAIN
UNCLASSIFIED CONTROLLED
NUCLEAR INFORMATION
ADC & Reviewing Official GSE Ghada S. Elchoufi
(Name and Title)
Date 4/10/2007

Revision Page

Revision	Revision Date	Affected Section	Description of Change
0	4/11/07	N/A	Initial Revision

Table of Contents

Section Page

1.0 SCOPE 4
1.1 General Description 4
1.2 Background 4
2.0 ACRONYMS/ABBREVIATIONS 5
3.0 DESCRIPTION OF PHYSICAL WORK 6
3.1 Performance Category and Functional Classification (PS) 6
3.2 Mechanical/Nuclear/Process 6
3.3 Instrumentation and Controls 10
3.4 Electrical 11
3.5 Plant Design 11
3.6 Civil/Structural/Architectural 11
4.0 ASSUMPTIONS 12
4.1 General Assumptions 12
4.2 Specific Assumptions 12
5.0 TECHNOLOGY DEVELOPEMNT ISSUES 13
6.0 REFERENCES 14
6.1 Drawing List 14
6.2 Design Input Documents 14
6.3 Applicable SRS & Industry Codes, Guides and Standards 14
6.4 Related Scopes of Work (SOW) 15
6.5 Miscellaneous 15
7.0 ATTACHMENTS 15
7.1 Attachment 1, Electrical Bulk Material List (4 pages) 15

1.0 SCOPE

1.1 General Description

This Scope of Work (SOW) covers the compressed gas systems included in the Balance of Plant (BOP) for the Plutonium Disposition Project. BOP compressed gas systems include dry air, breathing air, instrument air, helium gas, argon gas, oxidizing gas, and regeneration gas. The instrument air piping system for the PuVit Facility will be connected to the existing K-Area Complex instrument air system. The dry air, breathing air, helium gas, argon gas, oxidizing gas and regeneration gas systems are completely new.

1.2 Background

The Office of Environmental Management has approximately 13 metric tons (MT) of plutonium in approximately 21 MT bulk materials without any defined disposition path. The Plutonium Disposition (PUD) Project is critical to meet the Department of Energy's strategic goal of providing a responsible resolution to the permanent disposal of the nation's excess high-level radioactive materials and waste; and to enable the cleanup of Environmental Management sites.

The Plutonium Disposition Facility (PDF) will be located at the K-Area Complex (KAC) to disposition up to approximately 13 Metric Tons (MT) of Environmental Management (EM) owned surplus plutonium. The facility will utilize a vitrification process to vitrify plutonium into a lanthanide borosilicate (LaBS) glass matrix. This glass will be packaged into bagless transfer cans and placed inside a Defense Waste Processing Facility (DWPF) type canister. The canister will be transported to DWPF and filled with High Level Waste (HLW) glass. The DWPF canisters will be stored in the Glass Waste Storage Buildings and later transported to the geologic repository at Yucca Mountain.

This Scope of Work (SOW) has been developed for the purpose of facilitating construction cost and schedule estimates for the Conceptual Design Report (CDR) on the PUD project. The input to this SOW was the approved technical baseline consisting of a Facility Design Description (FDD) and associated System Design Descriptions (SDD). Every intent has been made to assure alignment and consistency between this SOW and the appropriate sections of the technical baseline, in order to provide accurate estimates. This SOW is not a PUD technical baseline document. A more detailed description of the system can be found in the associated SDD listed in the reference section.

A HOLD is placed to identify information that is preliminary in nature, results from a design uncertainty, originates from insufficient documentation, needs verification, or identifies a discrepancy. A **TBD** is placed to identify places in the text where numeric values or descriptive information is not available at the time that the current revision of the SOW is released.

2.0 ACRONYMS/ABBREVIATIONS

2.1

Acronyms/Abbreviations	Definitions
ASME	American Society of Mechanical Engineers
B&PVC	Boiler and Pressure Vessel Code
BOP	Balance of Plant
C/S/A	Civil/Structural/Architectural
CDR	Conceptual Design Report
degF	Degrees Fahrenheit
DS	Design Services
DWPF	Defense Waste Processing Facility
EM	Environmental Management
FDD	Facility Design Description
GS	General Services
HLW	High Level Waste
ID	Inside Diameter
KAC	K-Area Complex
LaBS	Lanthanide BoroSilicate
MCC	Motor Control Center
MT	Metric Ton
NFPA	National Fire Protection Association
P&ID	Piping & Instrumentation Diagram
PC	Performance Category
PDF	Plutonium Disposition Facility
PFD	Process Flow Diagram
PS	Production Support
PU	Plutonium
PUD	Plutonium Disposition
PuVit	Plutonium Vitrification
SC	Safety Class
SDD	System Design Description
SOW	Scope of Work
SRS	Savannah River Site
SS	Safety Significant
SSC	Structure, System, Component
SV	Solenoid Valve
TBD	To Be Determined
WSRC	Washington Savannah River Company

3.0 DESCRIPTION OF PHYSICAL WORK

3.1 Performance Category and Functional Classification (PS)

3.1.1 Performance Category

3.1.1.1 Performance Category for all BOP Air Systems is PC-2 (Ref. G-FDD-K-00001).

3.1.2 Functional Classification

3.1.2.1 The systems in this SOW shall be designed in accordance with the requirements of WSRC Manual WSRC-E7, Conduct of Engineering and Technical Support Procedure 2.25 Rev 14, “Functional Classification”. The Functional Classification for various components of BOP Air Systems is as follows:

A. Dry Air
Functional Classification – Production Support (PS)

B. Breathing Air
Functional Classification – Production Support (PS)

C. Instrument Air
Functional Classification – Production Support (PS)

D. Helium Gas
Functional Classification – Production Support (PS)

E. Argon Gas
Functional Classification – Production Support (PS)

F. Oxidizing Gas
Functional Classification – Production Support (PS)

G. Regeneration Gas
Functional Classification – Production Support (PS)

3.2 Mechanical/Nuclear/Process

3.2.1 Dry Air System

3.2.1.1 The Dry Air System provides dry air (-40 deg F dewpoint) to the following services:

A. Oxidation System Exit Staging Glove Box (GBS-GB-001E)

B. Feed Preparation System Glove Box (GBS-ALOK-002, GBS-GB-012B, GBS-ALOK-003, GBS-GB-012C/D)

C. Milling & Mixing System Glove Box (GBS-GB-017)

D. Sections of the Material Handling Tunnel associated or connected with the Gloveboxes in this section.

E. Vitrification Melters (VIT-TK-001 through VIT-TK-010)

3.2.1.2 Refer to M-M5-K-01960 for the Dry Air Flow Diagram. The major components of the Dry Air System are:

A. Dry Air Packaged Unit (2 each)

B. Dry Air Receiver Tank (1 each)

C. Filters at Vitrification Melters (20 each)

D. Piping/Valves. See Piping Isometrics for Bulk Material Quantities.

3.2.1.3 Dry Air Packaged Unit (DRY-DRY-001, DRY-DRY-002)

Each of the two Dry Air Packaged Units (rated for 500 scfm) includes an inlet air filter, centrifugal blower, refrigeration dryer, desiccant dryer, and an outlet air cooler. Each unit shall also include all necessary instruments and controls, and interconnecting piping and wiring. See Data Sheet M-DS-K-00156 for more details.

3.2.1.4 Dry Air Receiver Tank (DRY-VSL-001)

The Dry Air Receiver Tank is a 500 gallon, vertical tank constructed of carbon steel. The tank has design conditions of 10 psig @ 150 degF.

3.2.1.5 Filters at Vitrification Melters (DRY-FLT-003 through DRY-FLT-022)

Each of the twenty dry air filters are constructed of stainless steel and shall be equivalent to Swagelok TF Series filters (Size ½", Sintered Filter Element).

3.2.1.6 Piping/Valves

Piping material is designated by a "P-code" designation from SRS Document WSRC-IM-95-58. The piping material will be threaded, welded or utilize flange fittings. See Piping Isometrics for more details.

3.2.2 Breathing Air System

3.2.2.1 The breathing air system provides CGA Grade D compressed air to the following breathing air manifold locations:

A.	Green Fuel Disassembly Airlock	(-40 elev.)
B.	Bagless Transfer/NDA Room	(-40 elev.)
C.	Oxidation Room	(-40 elev.)
D.	Feed Preparation Room Airlock	(-40 elev.)
E.	Feed Preparation Room	(-40 elev.)
F.	Milling & Mixing Room Airlock	(-40 elev.)
G.	Vitrification Room #1 Airlock	(-40 elev.)
H.	Vitrification Room #3	(-40 elev.)

I. Vitrification Room #2 (-40 elev.)

J. Vitrification Room #5 (-40 elev.)

K. Vitrification Room #4 (-40 elev.)

L. Feed Prep/Oxidation Cont Room Airlock (-40 elev.)

M. Oxidation Room Airlock (-40 elev.)

N. Vitrification Room #3 Airlock (-40 elev.)

O. Bagless Transfer Room Airlock (-40 elev.)

P. Glovebox HEPA Fltr/Mech Equip Rm Airlock (-20 elev.)

Q. TRU Waste Loading Room (-20 elev.)

3.2.2.2 Refer to M-M5-K-01980 for Breathing Air System flow diagram.The major components of the Breathing Air System are:

A. Breathing Air Compressor Package (1 each)

B. Breathing Air Receiver Tank (1 each)

C. Breathing Air Purification System Package (1 each)

D. Breathing Air Particulate Filter (1 each)

E. Breathing Air Bottle Station (1 each)

F. Breathing Air Distribution Manifolds (15 Each)

G. Piping/Valves. See Piping Isometrics for Bulk Material Quantities.

3.2.2.3 Breathing Air Compressor Package (BA-CMP-001)

The breathing air compressor shall be an air-cooled, oil-free, rotary screw compressor capable of providing 280 scfm @ 125 psig. The compressor shall include an inlet filter (BA-FLT-001), aftercooler (BA-HTEX-001), moisture separator (BA-MSR-001), and all required interconnecting piping and instruments/controls. See Data Sheet M-DS-K-00155 for more details.

3.2.2.4 Breathing Air Receiver Tank (BA-VSL-001)

The breathing air receiver tank shall be a 200 gallon, carbon steel vessel with design conditions of 200 psig @ 150 deg F. See Data Sheet M-DS-K-00155 for more details.

3.2.2.5 Breathing Air Purification System Package

The breathing air purification system shall purify 280 scfm (@125 psig) of air to CGA Grade D requirements. The purification system shall include coalescing filter (BA-FLT-003), particulate filter (BA-FLT-004), charcoal filter (BA-FLT-005), air dryer (BA-DRY-001), and CO Monitor (BA-MON-001). See Data Sheet M-DS-K-00155 for more details.

3.2.2.6 Breathing Air Particulate Filter (BA-FLT-002)

The breathing air particulate filter removes particulate sizes 1 micron and greater from a breathing air flow rate of 280 scfm. Design conditions are 150 psig at 150 degF. Suggested Manufacturers include Ingersoll-Rand, Hankison, and Atlas Copco or approved equal.

3.2.2.7 Breathing Air Bottle Station (BA-STAT-001)

The breathing air bottle station is assumed be a station consisting of 8-10 bottles **[HOLD]** of high pressure air manifolded together.

3.2.2.8 Breathing Air Distribution Manifolds

Provide Breathing Air Distribution Manifolds per Engineering Standard 11595, at locations identified in section 3.2.2.1 above.

3.2.2.9 Piping/Valves

Piping material is designated by a “P-code” designation from SRS Document WSRC-IM-95-58. The piping material will be welded, threaded or utilize flange fittings. See Piping Isometrics for more details.

3.2.3 Instrument Air System

3.2.3.1 The Instrument Air System shall be connected to the existing KAC instrument air system. The new Instrument Air System piping provides instrument air to the following locations:

A. Oxidation Room

B. Bagless Transfer Room

C. Milling & Mixing Room

D. Feed Preparation Room

E. Vitrification Rooms

3.2.3.2 Refer to M-M5-K-01961 for PFD for the Instrument Air System. The major components of the Instrument Air System are:

A. Piping/Valves. See Piping Isometrics for Bulk Material Quantities.

B. Wall mounted SV Cabinet (for pneumatic controlled components).

3.2.3.3 Piping/valves

Piping material is designated by a “P-code” designation from SRS Document WSRC-IM-95-58. The piping material will be welded, threaded or utilize flange fittings. See Piping Isometrics for more details.

3.2.3.4 SV Cabinets

Total of five cabinets with distribution manifolds with each containing twelve (12) 3 way solenoid valves. Cabinet size is 24”x24”x10”.

3.2.4 Helium Gas

The Helium Gas System provides helium gas to the bagless transfer glovebox.

3.2.4.1 The major components of the Helium Gas System are:

A. Compressed Helium Gas Bottles (2 each **[HOLD]**)

Piping/Valves. See Piping Isometrics for Bulk Material Quantities.

3.2.5 Argon Gas

The Argon Gas System provides argon to the metal oxidation glove box and to the metal oxidation furnaces.

3.2.5.1 The major components of the Argon Gas System are:

A. Compressed Argon Gas Bottles (2 each **[HOLD]**)

B. Piping/Valves. See Piping Isometrics for Bulk Material Quantities.

3.2.6 Oxidizing Gas

The Oxidizing Gas System provides a helium/oxygen gas mixture to the metal oxidation furnaces.

3.2.6.1 The major components of the Oxidizing Gas System are:

A. Compressed Oxidizing Gas Bottles (2 each **[HOLD]**)

Piping/Valves. See Piping Isometrics for Bulk Material Quantities.

3.2.7 Regeneration Gas

The regeneration gas system provides an argon/hydrogen gas mixture to the argon purification system.

3.2.7.1 The major components of the Regeneration Gas System are:

A. Compressed Regeneration Gas Bottles (2 each **[HOLD]**)

B. Piping/Valves. See Piping Isometrics for Bulk Material Quantities.

3.3 Instrumentation and Controls

3.3.1 Install five Solenoid Valve Cabinets furnished by Engineering within respective process rooms. Each Solenoid Valve Cabinet will contain a remote controller which communicates with Facility ICS via RS485 or similar protocol.

3.3.2 In addition to the instrument air and communications signal interface connections, the SV racks will receive SV control power from a dedicated branch circuit and control power from a UPS backed source.

3.3.3 Skid mounted instrumentation associated with Dry Air Packaged Unit, Breathing Air Compressor, and other Gas Systems will be connected to ICS System via Air Systems I/O Cabinet to allow system status conditions to be communicated to main CCR.

3.3.4 Bulk Cable/Raceway quantities for I & C components are included in Attachment 1.

3.4 Electrical

3.4.1 The scope will include following electrical components and services. The major electrical components will be provided as Engineered Equipment. This Scope of Work includes all raceway, power, control cables/terminations between field equipment and local controls. Provide onsite setup and assembly of the referenced Engineered Equipment. Refer to the attached Bulk Takeoff for cable and conduit descriptions and quantities.

3.4.1.1. Electrical power distribution shall be as shown on single line drawings E-E2-K-02232. A 208/120 V Panel is provided to feed the Breathing Air System loads.

3.4.1.2 A total of four Electrical Relay Cabinets (by Engineering) will be required for this Scope. Three will be located on Elevation -40'-0" and one on Elevation -20'-0" for control of the Horns/Strobes and indicating lights on the Breathing Air Manifolds and associated process work areas.

3.4.1.3 Provide and Install 11 Indicating Lights, 11 Breathing Air Acknowledge Push Buttons and 18 Horn/Strobes on Elevation -40"-0" as shown on drawing SK-DE-BOP-0018.

3.4.1.4 Provide and Install 2 Indicating Lights, 2 Breathing Air Acknowledge Push Buttons and 2 Horn/Strobes on Elevation -20'-0" as shown on drawing SK-DE-BOP-0017.

3.4.1.5 Work Scope includes installation of new grounding pigtails (approx. 10 ft. long with bolted connections) between new permanent electrical equipment and/or skids to the existing ground grid system. Small movable equipment shall be grounded in accordance with code and or industry practices.

3.4.1.6 Provide and install 6-junction boxes of 24" x 24" x 6".

3.4.1.7 Provide and install pull boxes, cables and conduits.

3.4.1.8 See Attachment 1 for listing of Electrical Bulk Materials.

3.5 Plant Design

3.5.1 Piping quantities have been estimated per Piping Isometrics. Add 10% contingency factor to the estimated piping lengths shown on the piping isometrics.

3.6 Civil/Structural/Architectural

3.6.1 The C/S/A scope of work required for installation of supports for the equipments for Compressed Gas System is as follows:

3.6.1.1 Solenoid Valve Cabinets (5 each)
The size of each cabinet will be approx. 24" x 24" x 10" deep and will weigh approx. 100 lbs. It will be provided with the bolt holes for mounting the cabinet. Each cabinet will be supported by a frame made of P1000 unistruts (24"x24") and anchored with ½" dia. bolts to the concrete walls.

3.6.1.2 Relay Cabinets (4 Each)
The size of each Cabinet will be approx. 24” x 10” x 36” high and will weigh approx. 200 lbs. It will be provided with the frame with the bolt holes for mounting the cabinet. Each cabinet will be supported by a frame made of P1000 unistruts (24”x24”) and anchored with ½” dia. bolts to the concrete wall.

3.6.1.3 Breathing Air Purifier System Package (1 Each)
The size of each unit will be approx. 36” x 62” x 71” high and will weigh approx. 1400 lbs. It will be provided with the bolt holes for mounting the cabinet.The unit will be supported by a steel frame made of 4”x4’x1/2” angles and anchored with ½” dia. bolts to the concrete floor.

3.6.1.4 Dry/Breathing Air Receiver Tanks (2 Total)
The size of each tank will be approx. 30” Diameter x 72” high and will weigh approx. 600 lbs. It will be provided with the bolt holes for mounting the tank. It will be anchored with ½” dia. bolts to the concrete floor.

3.6.1.5 Air Compressor[1]
The size of the Unit will be approx. 89” x 54” x 76” high and will weigh approx. 5400 lbs. It will be provided with the bolt holes for mounting the unit. It will be anchored with ¾ ” Dia. bolts to the concrete floor.

3.6.1.6 Dry Air Packaged Units [2]
The size of each Unit will be approx. 7’ x 17’ and will weigh approx. 8500 lbs. It will be provided with the bolt holes for mounting the cabinet. Each unit will be anchored with ¾ ” dia. bolts to the concrete floor.

3.6.1.7 Estimated number of ½” diameter bolts= 60 Nos.

3.6.1.8 Estimated number of 3/4” diameter bolts= 120 Nos.

3.6.1.9 P1000 Unistrut = 64 ft

3.6.1.10 L 4x4x1/2” Angle = 172 ft

4.0 ASSUMPTIONS

4.1 General Assumptions

4.1.1 The Construction Agency will be the SRS Construction Group. DS will provide engineering documentation for the installation of this equipment and will rely on the use of SRS Guides and Standards.

4.1.2 SRS Construction Group will procure all bulk materials.

4.1.3 SRS Construction Group will procure all off-the-shelf components and equipment identified on engineering data sheets that do not require testing or quality documentation.

4.1.4 All vessels with an ID 6" or greater shall be per ASME B&PVC Section VIII, Division 1 code stamped or an approved waiver. An appropriate SRS verification record will be competed for each vessel and pressure protection device (disk or valve).

4.1.5 All piping will be per ASME B31.3.

4.2 Specific Assumptions

4.2.1 Instrumentation and Controls

No specific assumptions have been made.

4.2.2 Electrical

4.2.2.1 Pull/junction boxes will be required at 100 ft. run minimum intervals. Assume box size to be 18” X18” X 6”.

4.2.2.2 The existing grounding grid is intact and adequate for grounding of new equipment.

4.2.3 Plant Design

No specific assumptions have been made.

4.2.4 Mechanical

4.2.4.1 The existing KAC Facility Instrument Air system has sufficient capacity to meet both the existing KAC facility instrument air demands and the new PuVit Facility instrument air demands.

4.2.5 Civil/Structural/Architectural

4.2.5.1 Core drills will be required for routing electrical conduit through walls or floors.

4.2.5.2 Assume all anchor bolts used for equipment and commodity supports will be A36 Drillco Maxi bolts. Alternatively, Hilti Kwik Bolts –TZ are acceptable for anchoring items.

4.2.5.3 Assume Functional Classification for drilling holes in concrete surface is SC.

4.2.5.4 Any components inside any equipment like Glove Box Cabinets etc. are the integral parts of this equipment as one unit.

4.2.5.5 The material for all the base plates and structural steel components shall be Galvanized Carbon Steel.

4.2.5.6 For electrical conduits and equipment supports, use cookbook No. C-CI-G-0039, Rev 0.

4.2.5.7 For routing and supports for NPS 2” and smaller piping, use cookbook no. C-CH-G-00004 Rev. 0.

5.0 TECHNOLOGY DEVELOPEMNT ISSUES

There are currently no technology issues for the DA, BA, and IA systems.

6.0 REFERENCES

6.1 Drawing List

6.1.1 PUD Project Drawings & Sketches

6.1.1.1 M-M5-K-01960, Rev B, Dry Air PFD
6.1.1.2 M-M5-K-01961, Rev A, Instrument Air PFD
6.1.1.3 M-M5-K-01980, Rev A, Breathing Air PFD Exchanger
6.1.1.4 M-DS-K-00155, Rev A, Breathing Air System Data Sheet
6.1.1.5 M-DS-K-00156, Rev B, Dry Air System Data Sheet
6.1.1.6 SK-DE-ISO-0004, Rev A, Breathing Air Piping Isometric
6.1.1.7 SK-DE-ISO-0010, Rev A, Breathing Air Piping Isometric
6.1.1.8 SK-DE-ISO-0011, Rev A, Dry Air Piping Isometric
6.1.1.9 SK-DE-ISO-0012, Rev A, Instrument Air Piping Isometric
6.1.1.10 SK-DE-ISO-0038, Rev A, Oxygen/Helium Gas Piping Isometric
6.1.1.11 SK-DE-ISO-0039, Rev A, Oxygen/Helium Gas Piping Isometric
6.1.1.12 SK-DE-ISO-0040, Rev A, Regeneration Gas Piping Isometric
6.1.1.13 SK-DE-ISO-0041, Rev A, Regeneration Gas Piping Isometric
6.1.1.14 SK-DE-ISO-0042, Rev A, Argon Gas Piping Isometric
6.1.1.15 SK-DE-ISO-0043, Rev A, Argon Gas Piping Isometric
6.1.1.16 SK-DE-ISO-0044, Rev A, P-10 Gas Piping Isometric
6.1.1.17 SK-DE-ISO-0045, Rev A, P-10 Gas Piping Isometric
6.1.1.18 SK-DE-ISO-0046, Rev A, Helium Gas Piping Isometric
6.1.1.19 SK-DE-ISO-0047, Rev A, Helium Gas Piping Isometric
6.1.1.20 SK-DE-ISO-0051, Rev A, Regeneration Gas Piping Isometric
6.1.1.21 SK-DE-ISO-0052, Rev A, Regeneration Gas Piping Isometric
6.1.1.22 SK-DE-ISO-0053, Rev A, Breathing Air Piping Isometric
6.1.1.23 SK-DE-BOP-0017, Rev. A, Breathing Air Manifold Location Plan, Elevation -20
6.1.1.21 SK-DE-BOP-0018, Rev. A, Breathing Air Manifold Location Plan, Elevation -40
6.1.1.22 E-E2-K-02232, Rev. C, HVAC Motor Single Line Diagram Motor Control Center - ELNH-MCC-11M
6.1.1.23 SK-DE-EA-0001, Rev. A, 480V Standby Backup Power, Power Plan 108-1K
6.1.1.24 SK-DE-BOP-0017, Rev. A, Breathing Air Manifold Location Plan, Elevation -20
6.1.1.21 SK-DE-BOP-0018, Rev. A, Breathing Air Manifold Location Plan, Elevation -40

6.2 Design Input Documents

The following Facility Design Description and System Design Descriptions are the baseline documents used to develop this SOW.

6.2.1 Facility Design Description

6.2.1.1 G-FDD-K-00001, Rev B “PUV Facility Design Description”

6.2.2 System Design Description

6.2.2.1 N/A

6.3 Applicable SRS & Industry Codes, Guides and Standards

6.3.1 Industry Codes and Standards

6.3.1.1 ASME B31.3, 2006 - Chemical Plant and Petroleum Refinery Piping
6.3.1.2 ASME Boiler and Pressure Vessel Code, Sect. VIII, Div. 1, 2006
6.3.1.3 NFPA 70, 2005 – National Electrical Code

6.3.2 SRS Guides & Standards

6.3.2.1 WSRC-TM-95-1, Standard no. 15980, Rev. 6, “Mechanical Installation of Safety Class and Safety Significant Instrumentation”
6.3.2.2 WSRC-TM-95-1, Standard no. 11595, Rev. 2, “Breathing Air Distribution Systems”
6.3.2.3 WSRC-IM-95-58, Guide No. 15060-G, Rev. 5, “Application of ASME B31.3”
6.3.2.4 WSRC-IM-95-58, Guide No. 15980-G, Rev.3, “Installation and Calibration of Instruments”
6.3.2.5 WSRC-IM-95-58, Guide No. 16051-G, Rev.2, “Installation of Electrical Raceway Systems and Cable Trays”
6.3.2.6 WSRC-IM-95-58, Guide No. 16052-G, Rev.3, “Installation of Electrical Wires, Cables and Terminations”
6.3.2.7 WSRC-IM-95-58, Guide No. 16053-G, Rev.2, “Installation of Electrical Equipment”
6.3.2.8 WSRC-IM-95-58, Guide No. 16056-G, Rev.2, “Installation of Grounding Systems”
6.3.2.9 WSRC-IM-95-58, Guide No. 03251-G, Rev: 1, Concrete Anchors.
6.3.2.10 WSRC-IM-95-58, Guide No. 03252-G, Rev: 1, Installation and Testing of Concrete Anchors.
6.3.2.11 WSRC-IM-95-58, Guide No. 09900-G, Rev. 2, Architectural Field Painting.
6.3.2.12 WSRC-IM-95-58, Guide No. 09901-G, Rev. 2, Protective Coatings - Concrete and Masonry.

6.4 Related Scopes of Work (SOW)

6.4.1 C-SOW-K-00009, Rev 0, Civil/Structural/Architectural Scope of Work

6.4.2 M-SOW-K-00011, Rev 0, Vitrification Scope of Work

6.4.3 M-SOW-K-00013, Rev 0, Feed Preparation Scope of Work

6.4.3 M-SOW-K-00014, Rev 0, Milling & Mixing Scope of Work.

6.4.4 M-SOW-K-00015, Rev 0, Bagless Transfer and NDA Scope of Work.

6.4.5 M-SOW-K-00019, Rev 0, Metal Oxidation Scope of Work

6.4.6 M-SOW-K-00020, Rev 0, HVAC System Scope of Work

6.4.7 E-SOW-K-00017, Rev 0, Electrical Power System Scope of Work

6.5 Miscellaneous

6.5.1 M&O-NMM-2006-00101, Plant Support System Assessment (Mechanical) for the Plutonium Disposition Project

7.0 ATTACHMENTS

7.1 Attachment 1, Electrical Bulk Material List (4 pages)

ATTACHMENT No. 1
(Bulk Material Summary-Electrical)
BOP - AIR SYSTEMS

Scope Set: Balance of Plant - Air Systems **Date:** 4/3/2007

Prepared By: G.S. Rao **Reviewed By:** Rod King

Exterior Glovebox Cables

Sum of Qty XGB (ft)	
Ext. Cable Size/Type	Total
3/C # 2/0	80
3/C # 8	280
7/C #14	300
5/C #14	3,805
2/0 Gnd	200
3/C #12	4,520
4-20 mA Instrument Cable	900
3/C #14	1,700
2 PR #16	725
3 PR #16	300
Grand Total	12,810

All Raceway Types

Sum of Qty Rcwy (ft)	
RCWY	Total
1-1/2" IMC	540
2" IMC	260
3/4" IMC	7920
1" IMC	480
Grand Total	9200

Description: BOP-Compressed Gas Systems Bulk Materials, Cable and Conduit

Reference: E-E2-K-02232 (MCC-11M), J-J8-K-00050, SK-DE-EA-0001, SK-DE-BOP-0017, SK-DE-BOP-0018, M-M5-K-01961

All Conduits are IMC (Intermediate Metallic Conduit) type.

DO NOT ENTER DATA IN THIS TABLE (BELOW ARE CALCUATED FIELDS)

				Cable Estimates (Exterior GB)		GB Pentr	(Interior. GB)	Shared Rcwy/Tray	Raceway Estimates					XGB Cable Sum.		NGB Cable Sum.		Raceway Summary		
Item #	From Equipment	To Equipment	XGB Length (A) (ft)	Qty (A)	Cable size/type	Conn. (Qty)	Length (B) (ft)	Length (C) (ft)	Length (D) (ft)	Qty (D)	Size/Desc. (D)	Red	Notes/Comments	Ext. Cable Size/Type	Qty XGB (ft)	GB Cable Size/Type	Qty NGB (ft)	RCWY	Red	Qty Rcwy (ft)
1	Motor Control Center ELNH-MCC-11M	Dry Air Skid DRY-DRY-001	140	1	3/C # 8				120	1	1-1/2" IMC	N	Ref: E-E2-K-02232 SK-DE-EA-0001	3/C # 8	140	N/A	0	1-1/2" IMC	N	120
2	Motor Control Center ELNH-MCC-11M	Dry Air Skid DRY-DRY-002	140	1	3/C # 8				120	1	1-1/2" IMC	N	Ref: E-E2-K-02232 SK-DE-EA-0001	3/C # 8	140	N/A	0	1-1/2" IMC	N	120
3	Motor Control Center ELNH-MCC-11M	Breathing Air Compressor BA-CMP-001	80	1	3/C # 2/0				60	1	2" IMC	N	Ref: E-E2-K-02232 SK-DE-EA-0001	3/C # 2/0	80	N/A	0	2" IMC	N	60
4	Dry Air Skid DRY-DRY-001	Air System, I/O Cabinet ICS-CAB-050	100	1	7/C #14				80	1	3/4" IMC	N	Ref: E-E2-K-02232 SK-DE-EA-0001	7/C #14	100	N/A	0	3/4" IMC	N	80
5	Dry Air Skid DRY-DRY-002	Air System, I/O Cabinet ICS-CAB-050	100	1	7/C #14				80	1	3/4" IMC	N	Ref: J-J8-K-00050 SK-DE-EA-0001	7/C #14	100	N/A	0	3/4" IMC	N	80
6	Breathing Air Compressor BA-CMP-001	Air System, I/O Cabinet ICS-CAB-050	100	1	7/C #14				80	1	3/4" IMC	N	Ref: J-J8-K-00050 SK-DE-EA-0001	7/C #14	100	N/A	0	3/4" IMC	N	80
7	Dry Air Skid DRY-DRY-001	Air System, I/O Cabinet ICS-CAB-050	100	3	4-20 mA Instrument Cable				80	1	1" IMC	N	Ref: J-J8-K-00050 SK-DE-EA-0001	4-20 mA Instrument Cable	300	N/A	0	1" IMC	N	80
8	Dry Air Skid DRY-DRY-002	Air System, I/O Cabinet ICS-CAB-050	100	3	4-20 mA Instrument Cable				80	1	1" IMC	N	Ref: J-J8-K-00050 SK-DE-EA-0001	4-20 mA Instrument Cable	300	N/A	0	1" IMC	N	80
9	Breathing Air Compressor BA-CMP-001	Air System, I/O Cabinet ICS-CAB-050	100	3	4-20 mA Instrument Cable				80	1	1" IMC	N	Ref: J-J8-K-00050 SK-DE-EA-0001	4-20 mA Instrument Cable	300	N/A	0	1" IMC	N	80
10	Dry Air Skid DRY-DRY-001	Air System, I/O Cabinet ICS-CAB-050	100	1	3 PR #16				80	1	1" IMC	N	Ref: J-J8-K-00050 SK-DE-EA-0001	3 PR #16	100	N/A	0	1" IMC	N	80
11	Dry Air Skid DRY-DRY-002	Air System, I/O Cabinet ICS-CAB-050	100	1	3 PR #16				80	1	1" IMC	N	Ref: J-J8-K-00050 SK-DE-EA-0001	3 PR #16	100	N/A	0	1" IMC	N	80
12	Breathing Air Compressor BA-CMP-001	Air System, I/O Cabinet ICS-CAB-050	100	1	3 PR #16				80	1	1" IMC	N	Ref: J-J8-K-00050 SK-DE-EA-0001	3 PR #16	100	N/A	0	1" IMC	N	80
13	Relay Panel No.1	120 V Power Panel	70	1	3/C #12				50	1	3/4" IMC	N	Ref: SK-DE-BOP-0017	3/C #12	70	N/A	0	3/4" IMC	N	50
14	Relay Panel No.1	Air System I/O Cabinet ICS-CAB-050	170	1	5/C #14				150	1	3/4" IMC	N	Ref: SK-DE-BOP-0018 J-J8-K-00050	5/C #14	170	N/A	0	3/4" IMC	N	150
15	Relay Panel No.1	Horns/Strobes (2)	205	2	5/C #14				185	2	3/4" IMC	N	Ref: SK-DE-BOP-0017	5/C #14	410	N/A	0	3/4" IMC	N	370
16	Relay Panel No.1	Indicating lights (2)	205	2	3/C #12				185	2	3/4" IMC	N	Ref: SK-DE-BOP-0017	3/C #12	410	N/A	0	3/4" IMC	N	370
17	Relay Panel No.1	BA Ack. Buttons(2) (via JB No.1)	170	2	3/C #14			75	75	2	3/4" IMC		Ref: SK-DE-BOP-0017 (shared conduit)	3/C #14	340	N/A	0	3/4" IMC	N	150
18	Relay Panel No.2	120 V Power Panel	70	1	3/C #12				50	1	3/4" IMC	N	Ref: SK-DE-BOP-0018	3/C #12	70	N/A	0	3/4" IMC	N	50
19	Relay Panel No.2	Air System I/O Cabinet ICS-CAB-050	220	1	5/C #14				200	1	3/4" IMC	N	Ref: SK-DE-BOP-0018 J-J8-K-00050	5/C #14	220	N/A	0	3/4" IMC	N	200
20	Relay Panel No.2	Horns/Strobes (6)	150	6	5/C #14				130	6	3/4" IMC	N	Ref: SK-DE-BOP-0018	5/C #14	900	N/A	0	3/4" IMC	N	780
21	Relay Panel No.2	Indicating lights (3)	160	3	3/C #12				140	3	3/4" IMC	N	Ref: SK-DE-BOP-0018	3/C #12	480	N/A	0	3/4" IMC	N	420
22	Relay Panel No.2	BA Ack. Buttons(3) (via JB No.2)	170	3	3/C #14			75	75	3	3/4" IMC		Ref: SK-DE-BOP-0018 (shared conduit)							
23	Relay Panel No.3	120 V Power Panel	70	1	3/C #12				50	1	3/4" IMC	N	Ref: SK-DE-BOP-0018	3/C #12	70	N/A	0	3/4" IMC	N	50
24	Relay Panel No.3	Air System I/O Cabinet ICS-CAB-050	195	1	5/C #14				175	1	3/4" IMC	N	Ref: SK-DE-BOP-0018 J-J8-K-00050	5/C #14	195	N/A	0	3/4" IMC	N	175
25	Relay Panel No.3	Horns/Strobes (6)	155	6	5/C #14				135	6	3/4" IMC	N	Ref: SK-DE-BOP-0018	5/C #14	930	N/A	0	3/4" IMC	N	810
26	Relay Panel No.3	Indicating lights (4)	150	4	3/C #12				130	4	3/4" IMC	N	Ref: SK-DE-BOP-0018	3/C #12	600	N/A	0	3/4" IMC	N	520

				Cable Estimates (Exterior GB)		GB Pentr (Interior. GB)		Shared Rcwy/Tray	Raceway Estimates					XGB Cable Sum.		NGB Cable Sum.		Raceway Summary		
Item #	From Equipment	To Equipment	XGB Length (A) (ft)	Qty (A)	Cable size/type	Conn. (Qty)	Length (B) (ft)	Length (C) (ft)	Length (D) (ft)	Qty (D)	Size/Desc. (D)	Red	Notes/Comments	Ext. Cable Size/Type	Qty XGB (ft)	GB Cable Size/Type	Qty NGB (ft)	RCWY	Red	Qty Rcwy (ft)
27	Relay Panel No.3	BA Ack. Buttons(4) (via JB No.3)	170	4	3/C #14			75	75	4	3/4" IMC		Ref: SK-DE-BOP-0018 (shared conduit)	3/C #14	680	N/A	0	3/4" IMC	N	300
28	Relay Panel No.4	120 V Power Panel	70	1	3/C #12				50	1	3/4" IMC	N	Ref: SK-DE-BOP-0018	3/C #12	70	N/A	0	3/4" IMC	N	50
29	Relay Panel No.4	Air System I/O Cabinet ICS-CAB-050	170	1	5/C #14				150	1	3/4" IMC	N	Ref: SK-DE-BOP-0018 J-J8-K-00050	5/C #14	170	N/A	0	3/4" IMC	N	150
30	Relay Panel No.4	Horns/Strobes (6)	135	6	5/C #14				115	6	3/4" IMC	N	Ref: SK-DE-BOP-0018	5/C #14	810	N/A	0	3/4" IMC	N	690
31	Relay Panel No.4	Indicating lights(4)	150	4	3/C #12				130	4	3/4" IMC	N	Ref: SK-DE-BOP-0018	3/C #12	600	N/A	0	3/4" IMC	N	520
32	Relay Panel No.4	BA Ack. Buttons(4) (via JB No.4)	170	4	3/C #14			75	75	4	3/4" IMC	N	Ref: SK-DE-BOP-0018 (shared conduit)	3/C #14	680	N/A	0	3/4" IMC	N	300
33	Solenoid Valve Cabinet (Feed Prep)	120 V Power Panel -UPS (via JB No.5)	220	1	3/C #12			100	100	1	3/4" IMC	N	Ref: M-M5-K-01961 (shared conduit)	3/C #12	220	N/A	0	3/4" IMC	N	100
34	Solenoid Valve Cabinet (Feed Prep)	120 V Power Panel (Normal) (via JB No.6)	170	1	3/C #12			100	50	1	3/4" IMC	N	Ref: M-M5-K-01961 (shared conduit)	3/C #12	170	N/A	0	3/4" IMC	N	50
35	Solenoid Valve Cabinet (Feed Prep)	Air System I/O Cabinet ICS-CAB-050	145	1	2 PR #16				125	1	3/4" IMC	N	Ref: M-M5-K-01961	2 PR #16	145	N/A	0	3/4" IMC	N	125
36	Solenoid Valve Cabinet (Oxidation)	120 V Power Panel -UPS (via JB No.5)	220	1	3/C #12			100	100	1	3/4" IMC	N	Ref: M-M5-K-01961 (shared conduit)	3/C #12	220	N/A	0	3/4" IMC	N	100
37	Solenoid Valve Cabinet (Oxidation)	120 V Power Panel (Normal) (via JB No.6)	220	1	3/C #12			100	100	1	3/4" IMC	N	Ref: M-M5-K-01961 (shared conduit)	3/C #12	220	N/A	0	3/4" IMC	N	100
38	Solenoid Valve Cabinet (Oxidation)	Air System I/O Cabinet ICS-CAB-050	145	1	2 PR #16				125	1	3/4" IMC	N	Ref: M-M5-K-01961 J-J8-K-00050	2 PR #16	145	N/A	0	3/4" IMC	N	125
39	Solenoid Valve Cabinet (Milling & Mixing)	120 V Power Panel -UPS (via JB No.5)	220	1	3/C #12			100	100	1	3/4" IMC	N	Ref: M-M5-K-01961 (shared conduit)	3/C #12	220	N/A	0	3/4" IMC	N	100
40	Solenoid Valve Cabinet (Milling & Mixing)	120 V Power Panel (Normal) (via JB No.6)	220	1	3/C #12			100	100	1	3/4" IMC	N	Ref: M-M5-K-01961 (shared conduit)	3/C #12	220	N/A	0	3/4" IMC	N	100
41	Solenoid Valve Cabinet (Milling & Mixing)	Air System I/O Cabinet ICS-CAB-050	145	1	2 PR #16				125	1	3/4" IMC	N	Ref: M-M5-K-01961 J-J8-K-00050	2 PR #16	145	N/A	0	3/4" IMC	N	125
42	Solenoid Valve Cabinet (Vitrification)	120 V Power Panel -UPS (via JB No.5)	220	1	3/C #12			100	100	1	3/4" IMC	N	Ref: M-M5-K-01961	3/C #12	220	N/A	0	3/4" IMC	N	100
43	Solenoid Valve Cabinet (Vitrification)	120 V Power Panel (Normal) (via JB No.6)	220	1	3/C #12			100	100	1	3/4" IMC	N	Ref: M-M5-K-01961	3/C #12	220	N/A	0	3/4" IMC	N	100
44	Solenoid Valve Cabinet (Vitrification)	Air System I/O Cabinet ICS-CAB-050	145	1	2 PR #16				125	1	3/4" IMC	N	Ref: M-M5-K-01961 J-J8-K-00050	2 PR #16	145	N/A	0	3/4" IMC	N	125
45	Solenoid Valve Cabinet (Bagless Transfer)	120 V Power Panel -UPS (via JB No.5)	220	1	3/C #12			100	100	1	3/4" IMC	N	Ref: M-M5-K-01961 (shared conduit)	3/C #12	220	N/A	0	3/4" IMC	N	100
46	Solenoid Valve Cabinet (Bagless Transfer)	120 V Power Panel (Normal) (via JB No.6)	220	1	3/C #12			100	100	1	3/4" IMC	N	Ref: M-M5-K-01961 (shared conduit)	3/C #12	220	N/A	0	3/4" IMC	N	100
47	Solenoid Valve Cabinet (Bagless Transfer)	Air System I/O Cabinet ICS-CAB-050	145	1	2 PR #16				125	1	3/4" IMC	N	Ref: M-M5-K-01961 J-J8-K-00050	2 PR #16	145	N/A	0	3/4" IMC	N	125
48	Relay Panel No.1	Junction Box No.1 (BA Ack. Buttons)							75	1	1-1/2" IMC	N	Shared Conduit	0	0	N/A	0	1-1/2" IMC	N	75
49	Relay Panel No.2	Junction Box No.2 (BA Ack. Buttons)							75	1	1-1/2" IMC	N	Shared Conduit	0	0	N/A	0	1-1/2" IMC	N	75
50	Relay Panel No.3	Junction Box No.3 (BA Ack. Buttons)							75	1	1-1/2" IMC	N	Shared Conduit	0	0	N/A	0	1-1/2" IMC	N	75
51	Relay Panel No.4	Junction Box No.4 (BA Ack. Buttons)							75	1	1-1/2" IMC	N	Shared Conduit	0	0	N/A	0	1-1/2" IMC	N	75

				Cable Estimates (Exterior GB)		GB Pentr	(Interior. GB)	Shared Rcwy/Tray	Raceway Estimates					XGB Cable Sum.		NGB Cable Sum.		Raceway Summary		
Item #	**From Equipment**	**To Equipment**	**XGB Length (A) (ft)**	**Qty (A)**	**Cable size/type**	**Conn. (Qty)**	**Length (B) (ft)**	**Length (C) (ft)**	**Length (D) (ft)**	**Qty (D)**	**Size/Desc. (D)**	**Red**	**Notes/Comments**	***Ext. Cable Size/Type***	***Qty XGB (ft)***	***GB Cable Size/Type***	***Qty NGB (ft)***	***RCWY***	**Red**	***Qty Rcwy (ft)***
52	120 V Power Panel (UPS)	Junction Box No.5 (SV Cabinets)							100	1	2" IMC	N	Shared Conduit	*0*	*0*	*N/A*	*0*	*2" IMC*	*N*	*100*
53	120 V Power Panel (Normal)	Junction Box No.6 (SV Cabinets)							100	1	2" IMC	N	Shared Conduit	*0*	*0*	*N/A*	*0*	*2" IMC*	*N*	*100*
54	Equipment		200	1	2/0 Gnd									*2/0 Gnd*	*200*	*N/A*	*0*	*0*	*N*	*0*

PLUTONIUM DISPOSITION PROJECT (U)

Project M09A

SCOPE OF WORK

M-SOW-K-00022 Revision 0

for

Balance of Plant - Water Systems (U)

Originated by:	Anthony Edwards Mechanical Engineer	Date: 3/23/07
Reviewed by:	Arun Amin Principal Mechanical Engineer	Date: 3/23/2007
Approved by:	EC Zoffitt III for Clayton Holloway Mechanical Lead	Date: 3/23/07
Approved by:	Roderick King Electrical/I&C Lead	Date: 3/23/07
Approved by:	Ghada Elchoufi C/S/A Lead	Date: 3/23/07
Approved by:	Drew Negus Plant Design Lead	Date: 3-23-07
Approved by:	John Hammond Construction/CDI Lead	Date: 3-23-07
Approved by:	Shah for RS. Randy Sears Design Authority	Date: 3-23-07
Approved by:	FOR B.C. Patel Project Engineer	Date: 3-23-07

UNCLASSIFIED
DOES NOT CONTAIN UNCLASSIFIED
CONTROLLED NUCLEAR INFORMATION

DC/RO: EC Zoffitt III 3/23/07

Revision Page

Revision	Revision Date	Affected Section	Description of Change
0	3/23/07	N/A	Initial Revision

Table of Contents

Section Page

1.0 SCOPE 4
1.1 General Description 4
1.2 Background 4
2.0 ACRONYMS/ABBREVIATIONS 5
3.0 DESCRIPTION OF PHYSICAL WORK 6
3.1 Performance Category and Functional Classification (PS, GS) 6
3.2 Mechanical/Nuclear/Process 6
3.3 Instrumentation and Controls 11
3.4 Electrical 12
3.5 Plant Design 13
3.6 Civil/Structural/Architectural 14
4.0 ASSUMPTIONS 16
4.1 General Assumptions 16
4.2 Specific Assumptions 16
5.0 Technology Development Issues 17
6.0 REFERENCES 18
6.1 Drawing List 18
6.2 Design Input Documents 18
6.3 Applicable SRS & Industry Codes, Guides and Standards 19
6.4 Related Scopes of Work (SOW) 19
6.5 Miscellaneous 20
7.0 ATTACHMENTS 20
7.1 Attachment 7.1, Mechanical Bulk Material List 20
7.2 Attachment 7.2, Electrical/I&C Bulk Material List 20
7.3 Attachment 7.3, C/S/A Bulk Material List 20
7.4 Attachment 7.4, Master Equipment List 20
7.5 Attachment 7.5, Cut Sheet for Backflow Preventer 20
7.6 Attachment 7.6, Cut Sheet for Eyewash/Safety Shower Station 20
7.7 Attachment 7.7, Cut Sheet for Personnel Decon Shower 20

1.0 SCOPE

1.1 General Description

This Scope of Work (SOW) covers the water systems included in the Balance of Plant (BOP) for the Plutonium Disposition Project. BOP water systems include cooling tower water, chilled water, domestic water, service clarified water, and sanitary sewer. The newly installed domestic water, service clarified water and sanitary sewer systems will be supported by existing K-Area Complex facility systems. The cooling tower water and chilled water systems are completely new.

1.2 Background

The Office of Environmental Management has approximately 13 metric tons (MT) of plutonium in approximately 21 MT bulk materials without any defined disposition path. The Plutonium Disposition (PUD) Project is critical to meet the Department of Energy's strategic goal of providing a responsible resolution to the permanent disposal of the nation's excess high-level radioactive materials and waste; and to enable the cleanup of Environmental Management sites.

The Plutonium Disposition Facility (PDF) will be located at the K-Area Complex (KAC) to disposition up to approximately 13 Metric Tons (MT) of Environmental Management (EM) owned surplus plutonium. The facility will utilize a vitrification process to vitrify plutonium into a lanthanide borosilicate (LaBS) glass matrix. This glass will be packaged into bagless transfer cans and placed inside a Defense Waste Processing Facility (DWPF) type canister. The canister will be transported to DWPF and filled with High Level Waste (HLW) glass. The DWPF canisters will be stored in the Glass Waste Storage Buildings and later transported to the geologic repository at Yucca Mountain.

This Scope of Work (SOW) has been developed for the purpose of facilitating construction cost and schedule estimates for the Conceptual Design Report (CDR) on the PUD project. The input to this SOW was the approved technical baseline consisting of a Facility Design Description (FDD) and associated System Design Descriptions (SDD). Every intent has been made to assure alignment and consistency between this SOW and the appropriate sections of the technical baseline, in order to provide accurate estimates. This SOW is not a PUD technical baseline document. A more detailed description of the system can be found in the associated SDD listed in the reference section.

A **HOLD** is placed to identify information that is preliminary in nature, results from a design uncertainty, originates from insufficient documentation, needs verification, or identifies a discrepancy. A **TBD** is placed to identify places in the text where numeric values or descriptive information is not available at the time that the current revision of the SOW is released.

2.0 ACRONYMS/ABBREVIATIONS

AHU	Air Handling Unit
ANSI	American National Standards Institute
ASME	American Society of Mechanical Engineers
B&PVC	Boiler and Pressure Vessel Code
BOP	Balance of Plant
CHW	Chilled Water
C/S/A	Civil/Structural/Architectural
CTW	Cooling Tower Water
CDR	Conceptual Design Report
degF	Degrees Fahrenheit
DS	Design Services
DW	Domestic Water
DWPF	Defense Waste Processing Facility
ECF	Entry Control Facility
EM	Environmental Management
FDD	Facility Design Description
ft	feet
GPM	Gallons Per Minute
GS	General Services
HLW	High Level Waste
HVAC	Heating, Ventilation and Air Conditioning
ICS	Integrated Control System
ID	Inside Diameter
I/O	Input/Output
KAC	K-Area Complex
LaBS	Lanthanide BoroSilicate
lbs	pounds
MT	Metric Ton
NDA	NonDestructive Assay
NFPA	National Fire Protection Association
P&ID	Piping & Instrumentation Diagram
PC	Performance Category
PDF	Plutonium Disposition Facility
PFD	Process Flow Diagram
PIDAS	Perimeter Intrusion Detection and Assessment System
PS	Production Support
PU	Plutonium
PUD	Plutonium Disposition
PuVit	Plutonium Vitrification
SANS	Sanitary Sewer
SC	Safety Class
SCDHEC	South Carolina Department of Health & Environmental Control
SCW	Service Clarified Water
SDD	System Design Description
SOW	Scope Of Work
SRS	Savannah River Site
SSC	Structure, System, Component
TBD	To Be Determined
TDH	Total Developed Head
UL	Underwriters Laboratory
VFD	Variable Frequency Drive
WSRC	Washington Savannah River Company

3.0 DESCRIPTION OF PHYSICAL WORK

3.1 Performance Category and Functional Classification (PS, GS)

3.1.1 Performance Category

The performance category for all BOP water systems included in this scope of work is PC-2 (Ref. G-TC-K-00002).

3.1.2 Functional Classification

The systems in this SOW shall be designed in accordance with the requirements of WSRC Manual WSRC-E7, Conduct of Engineering and Technical Support Procedure 2.25 Rev 14, "Functional Classification", as follows (Ref. G-TC-K-00002):

A. Cooling Tower Water: Functional Classification – Production Support (PS)

B. Chilled Water: Functional Classification – Production Support (PS)

C. Domestic Water: Functional Classification – Production Support (PS)

D. Service Clarified Water: Functional Classification – Production Support (PS)

E. Sanitary Sewer System: Functional Classification – General Services (GS)

3.2 Mechanical/Nuclear/Process

3.2.1 *Chilled Water System*

The chilled water system is a closed loop system that provides cooling for the following services:

A. Process Area AHUs (HVAC-AHU-001, HVAC-AHU-002, HVAC-AHU-003)

B. NDA Equipment AHU (HVAC-AHU-004)

C. ECF AHU (HVAC-AHU-005)

D. Canister/Magazine Loading Area AHU (HVAC-AHU-006)

E. Oxidation/Milling & Mixing Heat Exchanger (CHW-HX-001)

F. Vitrification Melter Heat Exchanger (VIT-HTEX-001)

3.2.1.1 Chilled Water System Components - Refer to M-M6-K-02312 & M-M6-K-02313 for the P&ID for the chilled water system. The major components of the chilled water system are:

A. Chillers (3 each)

B. Chilled Water Pumps (5 each)

C. Expansion Tank (1 each)

D. Air Separator (1 each)

E. Chemical Feed Tank (1 each)

F. Heat Exchanger (1 each)

G. Piping/Valves (See Att. 7.1 for Valve Bulk Material Quantities)

3.2.1.2 Chillers (CHW-CHU-001, CHW-CHU-002, CHW-CHU-003)

Each of the three chillers shall be a water-cooled, centrifugal chiller rated for 300 Tons of cooling capacity. Each chiller shall be a packaged unit that includes compressors, compressor motors, condenser, evaporator, motor starters, instruments, and microprocessor based control system with local control panel. Motors shall include VFDs. Reference M-DS-K-00137.

A refrigerant recovery system shall be provided with the three chillers. The refrigerant recovery system shall include a compressor, a storage tank, and interconnecting piping.

3.2.1.3 Chilled Water Pumps (CHW-P-001, CHW-P-002, CHW-P-003, CHW-P-004, CHW-P-005)

Each of the three chilled water pumps (CHW-P-001, 002, 003) shall be base mounted, single stage, end suction centrifugal pumps capable of pumping 725 gpm @ 170 ft TDH. Each pump shall be provided complete with baseplate, motor, and flexible coupling. Reference M-DS-K-00138.

Each of the two chilled water pumps (CHW-P-004, CHW-P-005) shall be a centrifugal, canned motor pump capable of pumping approximately 30 gpm @ 40 psi. Reference M-DS-K-00151.

3.2.1.4 Expansion Tank (CHW-VSL-001)

The expansion tank shall be an ASME B&PVC Section VIII vessel fitted with a heavy-duty, butyl rubber bladder. Tank volume shall be approximately 100 gallon. Reference M-DS-K-00143.

3.2.1.5 Air Separator (CHW-VSL-002)

The tangential, centrifugal type air separator shall be an ASME B&PVC Section VIII vessel. The air separator shall be able to remove air from a chilled water flow rate of 1450 gpm. Reference M-DS-K-00144.

3.2.1.6 Chemical Feed Tank (CHW-VSL-003)

The chemical feed tank shall be a by-pass, chemical shot feeder type of chemical feed tank that is constructed to the requirements of ASME B&PVC Section VIII. Tank volume shall be five gallons. Reference M-DS-K-00145.

3.2.1.7 Heat Exchanger (CHW-HTEX-001)

The heat exchanger shall be a shell and tube type exchanger capable of cooling approximately 30 gpm of water from 60 degF to 55 degF. Ref. M-DS-K-00150.

3.2.1.8 Piping

Piping material is designated by a "P-code" designation from SRS Document WSRC-IM-95-58. The piping material will be threaded, welded or utilize flange fittings.

3.2.2 *Cooling Tower Water System*

The cooling tower water system is an open loop system that provides cooling for the following services:

A. CHW System Chillers (CHW-CHU-001, CHW-CHU-002, CHW-CHU-003)

3.2.2.1 Cooling Tower Water System Components - Refer to M-M6-K-02314 for the P&ID for the cooling tower water. The major components of the cooling tower water system are:

A. Cooling Tower Cells (3 each)

B. Cooling Tower Water Pumps (3 each)

C. Ozone Treatment System (1 each)

D. Piping/Valves (See Att. 7.1 for Valve Bulk Material Quantities)

3.2.2.2 Cooling Tower Cells (CTW-CTW-001, CTW-CTW-002, CTW-CTW-003)

The cooling tower shall be an induced draft, cross-flow type, factory assembled cooling tower that includes three independently operating cells. Each of the three cells shall cool 900 gpm of water from 95 degF to 85 degF. Each cell of the cooling tower shall be equipped with an UL listed control system. Fan motors shall be furnished with VFDs. Reference M-DS-K-00139.

3.2.2.3 Cooling Tower Water Pumps (CTW-P-001, CTW-P-002, CTW-P-003)

Each of the three cooling tower water pumps shall be base mounted, single stage, end suction centrifugal pumps capable of pumping 900 gpm @ 60 ft. TDH. Each pump shall be provided complete with baseplate, motor, and flexible coupling. Reference M-DS-K-00140.

3.2.2.4 Ozone Treatment System (CTW-MIX-001)

The ozone treatment system shall include ozone generator, ozone pump, oxygen concentrator, oxygen receiver tank, control panel, data recorder, and conductivity controller. The system shall also include all interconnecting piping and wiring. The ozone treatment system shall be capable of conditioning a cooling water flow rate of 1800 gpm. Reference M-DS-K-00141.

3.2.2.5 Piping

Piping material is designated by a "P-code" designation from SRS Document WSRC-IM-95-58. The piping material will be welded, threaded or utilize flange fittings.

3.2.3 *Domestic Water System*

The domestic water system shall be connected to the existing KAC domestic water system where the existing piping enters the PuVit Facility building. The new domestic water piping shall provide domestic water to the following services:

A. Eyewash/Safety Shower Stations

B. Personnel Decon Shower

C. Change Room/Restroom Facility Fixtures (ECF)

D. Trailer Offices Outside of PIDAS

E. Admin Building Fixtures

F. Service Clarified Water System (SCW system is fed by DW)

3.2.3.1 Domestic Water System Components – The major components of the domestic water system are:

A. Eyewash/Safety Shower Station (8 each)

B. Personnel Decon Shower (1 ea)

C. Backflow Preventer (5 ea)

D. Piping/Valves (See Att. 7.1 for Valve Bulk Material Quantities)

3.2.3.2 Eyewash/Safety Shower Station (See Attachment 7.5 for Cut Sheet)

The eight eyewash/safety shower stations shall meet the requirements of ANSI Z358.1-2004 and shall include a green light.

3.2.3.3 Personnel Decon Shower (See Attachment 7.6 for Cut Sheet)

The personnel decon shower shall be American Shower & Bath Model CLP-32 or equivalent.

3.2.3.4 Backflow Preventer (See Attachment 7.5 for Cut Sheet)

The five backflow preventers shall meet the requirements of SCDHEC Regulation R.61-58, Primary Drinking Water Regulations. The backflow preventers shall be Watts 909 or equivalent. Estimated sizes of required backflow preventers are:

Backflow Preventer Size	Quantity
¾"	1
1-1/2"	2
2"	2

3.2.3.5 Piping

Piping material is designated by a "P-code" designation from SRS Document WSRC-IM-95-58. The piping material will be welded, threaded or utilize flange fittings.

3.2.4 *Service Clarified Water System*

The service clarified water system will be supplied by and connected to the newly installed domestic water system. The service clarified water system shall provide water to the following services:

A. Make-Up Water for Chilled Water System

B. Make-Up Water for Cooling Tower Water System

C. Service water to AHU humidifiers.

D. Make-Up Water for Oxidation/Milling & Mixing Chilled Water System

E. Make-Up Water for the Disassembly Basin (Existing Service)

F. Make-Up Water to KAC CHW System (Existing Service)

3.2.4.1 Service Clarified Water System Components – The major components of the service clarified water system are:

A. Piping/Valves (See Att. 7.1 for Valve Bulk Material Quantities)

3.2.4.2 Piping

Piping material is designated by a "P-code" designation from SRS Document WSRC-IM-95-58. The piping material will be welded, threaded or utilize flange fittings.

3.2.5 *Sanitary Sewer System*

The sanitary sewer system shall provide service to the following:

A. New Admin. Building

B. Trailer Offices outside of PIDAS

C. ChangeRoom/Restroom Facility (ECF)

3.2.5.1 Sanitary Sewer System – The major components of the sanitary sewer system are:

A. Piping/Valves (See Att. 7.1 for Piping & Valve Bulk Material Quantities)

3.2.5.2 Piping

Piping material is designated by a "P-code" designation from SRS Document WSRC-IM-95-58. The piping material will be welded, threaded or utilize flange fittings.

3.3 Instrumentation and Controls

3.3.1 *Chilled Water System*

The chilled water system shall be controlled by a PLC (CHW-CAB-510) that shall be installed inside of the new chiller building. A serial link will be provided with the PLC for communication to the ICS. The ICS will monitor and provide supervisory control to the chilled water system. The chilled water system shall use I/O cabinet CHW-CAB-500 and instrument cabinet CHW-INST-100. Control requirements and detailed information are provided in the control block diagram J-J8-K-00031 and the logic description J-J2-K-01556. Control requirements for the Milling & Mixing/Oxidation process chilled water system are provided in J-J8-K-00028. Refer to Attachment 7.2 for I&C related bulk cable and raceway material listing.

3.3.1.1 Chillers (CHW-CHU-001, CHW-CHU-002, CHW-CHU-003)

The chillers are served by the following instruments:

A. Evaporator Inlet Temperature Transmitter (3 ea)
B. Evaporator Outlet Temperature Transmitter (3 ea)
C. Evaporator Flow Transmitter (3 ea)
D. Condenser Outlet Temperature Transmitter (3 ea)
E. Condenser Low Flow Switch (3 ea)
F. Evaporator Inlet Valve with Actuator/ 2 Position Switches (3 ea)
G. Condenser Outlet Valve with Actuator/ 2 Position Switches (3 ea)
H. Local Pressure Gauges (12 ea)

3.3.1.2 Chilled Water Pumps (CHW-P-001, CHW-P-002, CHW-P-003)

The chilled water pumps are served by the following instruments:

A. Pump Controls (3 ea)
B. Flow Transmitter (3 ea)
C. Local Pressure Gauges (6 ea)

3.3.1.3 Chilled Water System – General

The chilled water system is served by the following instruments:

A. Three-Way Temperature Control Valve with Actuator/2 Position Switches (4 ea)
B. Pressure Relief Valves (5 ea)
C. Local Level Indicator (2 ea)
D. Local Pressure Gauge (3 ea)
E. Pressure Transmitter (1 ea)
F. Temperature Transmitter (1 ea)

3.3.1.4 Chilled Water Pumps (CHW-P-004, CHW-P-005)

The pumps are served by the following instruments:

A. Flow Transmitter (1 ea)
B. Pump Controls (2 ea)
C. Pressure Transmitter (1 ea)
D. Pressure Relief Valve (1 ea)

3.3.2 *Cooling Tower Water System*

The cooling water tower system shall be controlled by the chilled water system PLC (CHW-CAB-510). Reference section 3.3.1 for additional information on PLC. The cooling tower water system uses I/O cabinet CTW-CAB-500 and instrument cabinet CTW-INST-100. Refer to Attachment 7.2 for I&C bulk material list.

3.3.2.1 Cooling Tower Cells (CTW-CTW-001, CTW-CTW-002, CTW-CTW-003)

The cooling tower cells are served by the following instruments:

A. Cooling Fan VFD (3 ea)
B. Low Level Switch (3 ea)
C. Temperature Transmitter (5 ea)
D. Tower Water Inlet Valve with Actuator/2 Positions Switches (3 ea)

In addition to the instruments listed above, there is one temperature transmitter on the inlet water header to the three cooling tower cells.

3.3.2.2 Cooling Tower Water Pumps (CTW-P-001, CTW-P-002, CTW-P-003)

The cooling tower water pumps are served by the following instruments:

A. Pump Controls (3 ea)
B. Flow Transmitter (3 ea)
C. Local Pressure Gauge (6 ea)

3.4 Electrical

3.4.1 *Chilled Water System*

Refer to E-E2-K-02234 & E-E2-K-02235 for the single line diagrams for the chilled water system. The electrical work required for installation of the major components of the chilled water system is as follows:

3.4.1.1 Chillers (CHW-CHU-001, CHW-CHU-002, CHW-CHU-003)

Supply power to chillers CHW-CHU-001 & CHW-CHU-002 from unit substation ELNH-USS-001C, BUS A, breakers 2A and 2B. Supply power to chiller CHW-CHU-003 from unit substation ELNH-USS-001C, BUS B, breakers 4B.

3.4.1.2 Chilled Water Pumps (CHW-P-001, CHW-P-002, CHW-P-003, CHW-P-004, CHW-P-005)

Supply power to chilled water pumps CHW-P-001 & CHW-P-003 from motor control center ELNH-MCC-001C, cubicles 3B & 4F. Supply power to chilled water

pump CHW-P-002 from motor control center ELNH-MCC-002C, cubicle 1A. Supply power to CHW-P-004 from motor control center ELNH-MCC-24M, cubicle 2E. Supply power to CHW-P-005 from motor control center ELNH-MCC-31M, cubicle 2E.

3.4.2 *Cooling Water System*

Refer to E-E2-K-02234 & E-E2-K-02235 for the single line diagrams for the cooling tower water system. The electrical work required for installation of the major components of the cooling tower water system is as follows:

3.4.2.1 Cooling Tower Cells (CTW-CTW-001, CTW-CTW-002, CTW-CTW-003)

Supply power to cooling tower fans for CTW-CTW-001 & CTW-CTW-002 from motor control center ELNH-MCC-001C, cubicles 2A & 2K. Supply power to cooling tower fan for CTW-CTW-003 from motor control center ELNH-MCC-002C, cubicle 2J.

Feed cooling tower water heaters for CTW-CTW-001, CTW-CTW-002, CTW-CTW-003 from motor control centers ELNH-MCC-001C & ELNH-MCC-002C as shown on E-E2-K-02235

3.4.2.2 Cooling Tower Water Pumps (CTW-P-001, CTW-P-002, CTW-P-003)

Supply power to cooling tower water pump CWS-P-001 from motor control center ELNH-MCC-001C, cubicle 3D. Supply power to cooling tower water pumps CWS-P-002 & CWS-P-003 from motor control center ELNH-MCC-002C, cubicles 3G & 3K.

3.4.2.3 Ozone Treatment System (CTW-MIX-001)

Supply power to ozone treatment system CTW-MIX-001 from motor control center ELNH-MCC-001C, cubicle 1G. Supply power to ozone treatment system pump CTW-P-004 (included in ozone treatment system) from motor control center ELNH-MCC-001C, cubicle 4H.

3.4.3 *Miscellaneous*

Provide and install junction boxes, power outlets, conduits and cables for the equipment described in 3.4.1.1 thru 3.4.2.3.

Refer to Attachment 7.2 for electrical cable and raceway material listing.

3.5 Plant Design

3.5.1 Piping bulk material quantities are contained in the following isometric sketches:

Chilled Water System	SK-DE-ISO-0005, 0006, 0007, 0008, 0009, 0015, 0016, 0017, 0018, 0019, 0020, 0027, 0028, 0032, 0033, 0034, 0037, 0048, 0049
Cooling Tower Water System	SK-DE-ISO-0021, 0022, 0023, 0024, 0025, 0026, 0029, 0030, 0031
Domestic Water System	SK-DE-ISO-0013, 0036, 0050
Service Water System	N/A (piping included in domestic water isometrics)
Sanitary Sewer System	N/A (See Att. 1 for estimated piping quantities)

3.6 Civil/Structural/Architectural

3.6.1 *Chilled Water System*

The C/S/A scope of work required for installation of the major components of the chilled water system is as follows:

3.6.1.1 Chillers (CHW-CHU-001, CHW-CHU-002, CHW-CHU-003)

The chillers shall be located inside of the new chiller building which shall be constructed outside of the PIDAS. Each of the three chillers is expected to have dimensions of 15' L x 4' W x 6' H and will weigh approximately 15,000 lbs. Each chiller shall be provided with four 8" x 8" base plates that include 1-1/8" diameter bolt holes for anchoring chiller to concrete floor. One inch diameter Maxi-Bolts shall be used to anchor the chillers. Alternatively, cast-in-place anchors with grout sleeves or Hilti Kwik Bolt-TZ are acceptable for anchoring items.

3.6.1.2 Chilled Water Pumps (CHW-P-001, CHW-P-002, CHW-P-003)

The chilled water pumps shall be located outside of the new chiller building which shall be constructed outside of the PIDAS. Each of the three chilled water pumps is a base mounted pump with an approximate footprint size of 16" x 50" and an approximate weight of 700 lbs. Each pump shall be anchored to the concrete with ½"-diameter Maxi-Bolts. Alternatively, cast-in-place anchors with grout sleeves or Hilti Kwik Bolt-TZ are acceptable for anchoring items.

3.6.1.3 Chilled Water Pumps (CHW-P-004, CHW-P-005)

The chilled water pumps shall be located inside of the Mechanical Equipment Room 2, on the -20 elevation of the existing KAC building. Each of the two chilled water pumps has an approximate footprint size of 8" x 16" and an approximate weight of 150 lbs. Each pump shall be anchored to the concrete floor with ½"-diameter Maxi-Bolts. Alternatively, cast-in-place anchors with grout sleeves or Hilti Kwik Bolt-TZ are acceptable for anchoring items.

3.6.1.4 Expansion Tank (CHW-VSL-001)

The chilled water expansion tank shall be located outside of the new chiller building which shall be constructed outside of the PIDAS. The expansion tank shall be approximately 24"-diameter x 65" high, and shall weigh approximately 1200 lbs. The tank shall be installed vertically. The tank shall be mounted on three integral base clips that shall be anchored to the concrete with ½"-diameter Maxi-Bolts. Alternatively, cast-in-place anchors with grout sleeves or Hilti Kwik Bolt-TZ are acceptable for anchoring items.

3.6.1.5 Air Separator (CHW-VSL-002)

The air separator is located outside of the new chiller building which shall be constructed outside of the PIDAS. The air separator has three integral support lugs and weighs approximately 2000 lbs. It shall be supported on 2"-diameter pipe legs. Each pipe leg shall be attached to the air separator lifting lug, and shall be fitted with a 12" x 12" x 3/4" steel base plate. The air separator shall be anchored to the concrete with ½"-diameter Maxi-Bolts. Alternatively, cast-in-place anchors with grout sleeves or Hilti Kwik Bolt-TZ are acceptable for anchoring items.

3.6.1.6 Chemical Feed Tank (CHW-VSL-003)

The chemical feed tank is located inside of the new chiller building which shall be constructed outside of the PIDAS. The tank shall be large enough to hold a volume of approximately five gallons, and shall weigh approximately 100 lbs. The tank shall be supported on three legs, provided with the tank, and shall be anchored to the concrete with ½"-diameter Maxi-Bolts. Alternatively, cast-in-place anchors with grout sleeves or Hilti Kwik Bolt-TZ are acceptable for anchoring items.

3.6.1.7 Heat Exchanger (CHW-HTEX-001)

The heat exchanger shall be located inside of the Mechanical Equipment Room 2, on the -20 elevation of the existing KAC building. The heat exchanger shall be approximately 6"-diameter x 40" length, and shall weigh approximately 100 lbs. The heat exchanger shall be supported on two integral mounting feet, and shall be anchored to the concrete with ½"-diameter Maxi-Bolts. Alternatively, cast-in-place anchors with grout sleeves or Hilti Kwik Bolt-TZ are acceptable for anchoring items.

3.6.1.8 Underground Piping

Excavation and backfill is required for installation of 2 – 12" diameter chilled water pipes from the newly constructed chiller building to the existing KAC facility. The two 12" diameter lines will run parallel to one another and the excavation shall be approximately 850 ft. in length.

3.6.2 *Cooling Tower Water System*

The C/S/A scope of work required for installation of the major components of the cooling tower water system is as follows:

3.6.2.1 Cooling Tower Cells (CW-CTW-001, CTW-CTW-002, CTW-CTW-003)

The three cooling tower cells shall be located outside of the new chiller building which shall be constructed outside of the PIDAS. The total weight of the three cells is approximately 27,000 lbs. Each cell is approximately 12' W x12 L x17.5' H, and each cell shall be bolted to W6x25 steel beams with 5/8"-diameter bolts. Steel plates (12" x12" x3/4") shall be welded to each of the W6x25 beams, and shall be anchored to the concrete with ¾"-diameter Maxi-Bolts. Alternatively, cast-in-place anchors with grout sleeves or Hilti Kwik Bolt-TZ are acceptable for anchoring items.

3.6.2.2 Cooling Tower Water Pumps (CTW-P-001, CTW-P-002, CTW-P-003)

The three cooling water pumps shall be located outside of the new chiller building which shall be constructed outside of the PIDAS. Each of the three cooling water pumps is a base mounted pump with an approximate footprint size of 16" x 50" and an approximate weight of 700 lbs. Each pump shall be anchored to the concrete with ½"-diameter Maxi-Bolts. Alternatively, cast-in-place anchors with grout sleeves or Hilti Kwik Bolt-TZ are acceptable for anchoring items.

3.6.2.3 Ozone Treatment System (CTW-MIX-001)

The ozone treatment system shall be located inside of the new chiller building which will be constructed outside of the PIDAS. The system is assumed to be a

skid packaged unit having dimensions of 4' W x4' L x5' H and a weight of 1000 lbs. The system is expected be supplied with four base plates for anchoring the ozone treatment system to the concrete. The ozone treatment system shall be anchored to the concrete with 1"-diameter Maxi-Bolts. Alternatively, cast-in-place anchors with grout sleeves or Hilti Kwik Bolt-TZ are acceptable for anchoring items.

3.6.3 *Domestic Water & Sanitary Sewer – Underground Piping*

Trailer Offices: An underground 4" diameter sanitary sewer drain line shall be required from the new Trailer Offices and tied into an existing SANS line oriented north-south at approximately 200 ft. west of the new offices. An underground 1" diameter domestic water line shall be required from the new Trailer Offices and ties into an existing domestic water line located approximately 200 ft. to the west.

3.6.4 *General*

All piping of 2 inch diameter or less shall be supported per C-CH-G-00004.

All electrical commodities shall be supported per C-CI-G-0039.

Refer to Attachment 7.3 for C/S/A bulk material list.

Concrete work and chiller building installation is included in C-SOW-K-00010.

4.0 ASSUMPTIONS

4.1 General Assumptions

4.1.1 The Construction Agency will be the SRS Construction Group. DS will provide engineering documentation for the installation of this equipment and will rely on the use of SRS Guides and Standards.

4.1.2 SRS Construction Group will procure all bulk materials.

4.1.3 SRS Construction Group will procure all off-the-shelf components and equipment identified on engineering data sheets that do not require testing or quality documentation.

4.2 Specific Assumptions

4.2.1 *Instrumentation and Controls*

No specific assumptions have been made.

4.2.2 *Electrical*

4.2.2.1 Existing power distribution system located in 151-1K has enough capacity for the proposed new chiller plant and other project M09A loads.

4.2.2.2 All lighting and telecommunications related modifications shall be covered in other scope(s) of work.

4.2.2.3 Interface wiring for tie-ins to KAC PA, plant communications and integrated control system shall be routed within new direct buried raceway that is installed along route of new chilled water lines from chiller building to KAC facility.

4.2.3 *Plant Design*

No specific assumptions have been made.

4.2.4 *Mechanical*

4.2.4.1 The existing KAC Facility sanitary sewer system has sufficient capacity to meet both the existing KAC facility sanitary sewer demands and the new PuVit Facility sanitary sewer demands.

4.2.4.2 The existing KAC facility domestic water system has sufficient capacity to meet both the new domestic water demands of the PuVit Facility and the existing domestic water demands of the KAC facility.

4.2.4.3 All vessels with an ID 6" or greater shall be per ASME B&PVC Section VIII, Division 1 code stamped or an approved waiver. An appropriate SRS verification record will be competed for each vessel and pressure protection device (disk or valve).

4.2.4.4 As allowed by the P-Codes, socket welded piping is acceptable.

4.2.4.5 All piping will be per ASME B31.3.

4.2.5 *Civil/Structural/Architectural*

4.2.5.1 Core drills for routing commodities through wall or floor of the KAC will be covered in C-SOW-K-00009.

4.2.5.2 Assume that Hilti Kwik Bolt-TZ anchors are acceptable for use based upon initial evaluation of Awareness Memo 122, AM-122.

4.2.5.3 The material for all the base plates and structural steel components shall be Galvanized Carbon Steel.

4.2.5.4 The standard pipe hanger components such as pipe clamps, threaded rods, upper attachments etc. are catalog items by any hanger manufacturers like Cooper B-Line, ITT Grinnell etc.

4.2.5.5 The newly constructed chiller building shall have TOC elevation of 260'- 0", and the height of the building shall be20 ft. (max.).

4.2.5.6 Functional classification of drilling holes in KAC concrete surfaces is SC.

5.0 Technology Development Issues

There are currently no technology issues for the CHW, CTW, DW, SCW, and SANS systems.

6.0 REFERENCES

6.1 Drawing List

6.1.1 *PUD Project Drawings & Sketches*

6.1.1.1 M-M5-K-01959, Rev C, Chilled Water & Cooling Tower Water Systems PFD
6.1.1.2 M-M5-K-01962, Rev B, Milling & Mixing/Oxidation Heat Exchanger PFD
6.1.1.3 M-M6-K-02312, Rev A, Chilled Water System P&ID
6.1.1.4 M-M6-K-02313, Rev A, Chilled Water System P&ID
6.1.1.5 M-M6-K-02314, Rev B, Cooling Tower Water System P&ID
6.1.1.6 M-M6-K-02291, Rev A, Milling & Mixing/Oxidation Heat Exchanger P&ID
6.1.1.7 M-DS-K-00137, Rev A, Chiller Data Sheet
6.1.1.8 M-DS-K-00138, Rev A, Chilled Water Pump Data Sheet
6.1.1.9 M-DS-K-00139, Rev A, Cooling Tower Data Sheet
6.1.1.10 M-DS-K-00140, Rev A, Cooling Water Pump Data Sheet
6.1.1.11 M-DS-K-00141, Rev A, Ozone Treatment System Data Sheet
6.1.1.12 M-DS-K-00143, Rev A, Expansion Tank Data Sheet
6.1.1.13 M-DS-K-00144, Rev A, Air Separator Data Sheet
6.1.1.14 M-DS-K-00145, Rev A, Chemical Feed Tank Data Sheet
6.1.1.15 M-DS-K-00150, Rev B, Milling & Mixing/Oxidation Cooling Water Heat Exchanger
6.1.1.16 M-DS-K-00151, Rev B, Milling & Mixing/Oxidation Cooling Water Pump
6.1.1.17 J-J8-K-00031, Rev. A, Chilled Water System Control Block Diagram
6.1.1.18 J-J8-K-00028, Rev. B, Milling & Mixing System Control Block Diagram
6.1.1.19 J-J2-K-01556, Rev. A, Chilled Water Logic Diagram
6.1.1.20 E-E2-K-02234, Rev. B, Central Chilled Water Plant Unit Substation Single Line Diagram
6.1.1.21 E-E2-K-02235, Rev. C, Central Chilled Water Plant 480V MCC Single Line Diagram
6.1.1.22 E-E2-K-02229, Rev. D, Milling/Mixing and Vitrification MCC ELNH-MCC-24M Single Line Diagram
6.1.1.23 E-E2-K-02230, Rev. D, Milling/Mixing and Vitrification MCC ELNH-MCC-31M Single Line Diagram

6.1.2 *Existing Savannah River Site (SRS) Drawings*

6.1.2.1 C-CH-G-00004, Rev. 0, Routing & Supports for NPS 2" and Smaller Piping
6.1.2.2 C-CI-G-0039, Rev. 0, Electrical Raceway & Equipment Supports

6.2 Design Input Documents

The following Facility Design Description and System Design Descriptions are the baseline documents used to develop this SOW.

6.2.1 *Facility Design Description*

6.2.1.1 G-FDD-K-00001, Rev B, "PUV Facility Design Description"

6.2.2 *Task Requirements and Criteria*

6.2.2.1 G-TC-K-00002, Rev. A, Existing KAC System Modifications

6.3 Applicable SRS & Industry Codes, Guides and Standards

6.3.1 *Industry Codes and Standards*

6.3.1.1 ASME B31.3, 2006 - Chemical Plant and Petroleum Refinery Piping
6.3.1.2 ASME Boiler and Pressure Vessel Code, Sect. VIII, Div. 1, 2006
6.3.1.3 NFPA 70, 2005 – National Electrical Code

See Functional Design Description and System Design Descriptions References 2.2.1.1, 2.2.2.1, 2.2.2.2, and 2.2.2.3 for more codes and standards.

6.3.2 *SRS Guides & Standards*

6.3.2.1 WSRC-IM-95-58, Guide 15980-G, Rev. 3, Installation and Calibration of Instruments
6.3.2.2 WSRC-TM-95-1, Standard 15980, Rev. 6, "Mechanical Installation of Safety Class and Safety Significant Instrumentation"
6.3.2.3 WSRC-IM-95-58, Guide 15060-G, Rev. 5, "Application of ASME B31.3"
6.3.2.4 WSRC-IM-95-58, Guide 15020-G, Rev. 2, "Installation of Mechanical Equipment"
6.3.2.5 WSRC-TM-95-1, Standard 03010, Rev. 1, Coring, Chipping, and Drilling in Concrete
6.3.2.6 WSRC-TM-95-1, Standard 05057, Rev. 1, Control of Welding
6.3.2.7 WSRC-IM-95-58, Guide 03251-G, Rev. 1, Concrete Anchors
6.3.2.8 WSRC-IM-95-58, Guide 03252-G, Rev. 1, Installation and Testing of Concrete Anchors
6.3.2.9 WSRC-IM-95-58, Guide 16051-G, Rev. 2, Installation of Electrical Raceway and Cable Tray
6.3.2.10 WSRC-IM-95-58, Guide 16052-G, Rev. 3, Installation of Electrical Wires, Cables, and Terminations
6.3.2.11 WSRC-IM-95-58, Guide 16053-G, Rev. 2, Installation of Electrical Equipment
6.3.2.12 WSRC-IM-95-58, Guide 16056-G, Rev. 2, Installation of Grounding Systems

6.4 Related Scopes of Work (SOW)

6.4.1 M-SOW-K-00011, Rev 0, Vitrification Scope of Work – The CHW system provides cooling for the Vitrification cooling water system.

6.4.2 M-SOW-K-00014, Rev 0, Milling & Mixing Scope of Work – The CHW system provides cooling for the milling & mixing/oxidation systems.

6.4.3 M-SOW-K-00019, Rev 0, Metal Oxidation Scope of Work – The CHW system provides cooling for the milling & mixing/oxidation systems.

6.4.4 M-SOW-K-00020, Rev 0, HVAC System Scope of Work – The CHW system removes heat from the HVAC air handling units. The SCW system provides water to the AHU humidifiers.

6.4.5 J-SOW-K-00002, Rev 0, ICS Scope of Work

6.4.6 E-SOW-K-00017, Rev. 0, Electrical General Scope of Work

6.4.7 C-SOW-K-00009, Rev 0, SOW for Structural & Architectural Modifications for Process Building

6.4.8 C-SOW-K-00010, Rev 0, C/S/A SOW for Buildings Outside of the PIDAS

6.5 Miscellaneous

6.5.1 M&O-NMM-2006-00101, Plant Support System Assessment (Mechanical) for the Plutonium Disposition Project

7.0 ATTACHMENTS

7.1 Attachment 7.1, Mechanical Bulk Material List

7.2 Attachment 7.2, Electrical/I&C Bulk Material List

7.3 Attachment 7.3, C/S/A Bulk Material List

7.4 Attachment 7.4, Master Equipment List

7.5 Attachment 7.5, Cut Sheet for Backflow Preventer

7.6 Attachment 7.6, Cut Sheet for Eyewash/Safety Shower Station

7.7 Attachment 7.7, Cut Sheet for Personnel Decon Shower

ATTACHMENT 7.1 (sheet 1 of 2)

Mechanical Bulk Material List

Valves

CHILLED WATER SYSTEM				
Item No	**Description**	**Size**	**Manual/Auto**	**Quantity**
1	Butterfly Valve	8"	Manual	9 ea
2	Gate Valve	2"	Manual	36 ea
3	Butterfly Valve	12"	Manual	2 ea
4	Gate Valve	12"	Manual	2 ea
5	Gate Valve	1"	Manual	12 ea
6	Butterfly Valve	8"	Automatic	3 ea
7	Circuit Setter Valve	8"	Manual	3 ea
8	Triple Duty Valve	8"	Manual	3 ea
9	Three-Way PCV/TCV	2"	Manual	3 ea
10	Three-Way PCV/TCV	2"	Automatic	5 ea
11	Check Valve	2"	Manual	2 ea

COOLING TOWER WATER SYSTEM				
Item No	**Description**	**Size**	**Manual/Auto**	**Quantity**
1	Butterfly Valve	8"	Manual	15 ea
2	Butterfly Valve	8"	Automatic	6 ea
3	Triple Duty Valve	8"	Manual	3 ea
4	Butterfly Valve	12"	Manual	2 ea
5	Ball Valve	2"	Manual	4 ea
6	Gate Valve	2"	Manual	9 ea
7	Butterfly Valve	2"	Manual	3 ea
8	Gate Valve	1-1/2"	Manual	4 ea

DOMESTIC WATER SYSTEM				
Item No	**Description**	**Size**	**Manual/Auto**	**Quantity**
1	Gate Valve	2"	Manual	10 ea
2	Gate Valve	3"	Manual	1 ea
3	Gate Valve	6"	Manual	1 ea

ATTACHMENT 7.1 (sheet 2 of 2)

Mechanical Bulk Material List

Valves (continued)

SERVICE CLARIFIED WATER SYSTEM				
Item No	Description	Size	Manual/Auto	Quantity
1	Gate Valve	2"	Manual	4 ea

SANITARY SEWER SYSTEM				
Item No	Description	Size	Manual/Auto	Quantity
1	Gate Valve	4"	Manual	2 ea

Piping

SANITARY SEWER SYSTEM			
Item No	Description	Size	Quantity
1	PVC	4"	300 ft

DOMESTIC WATER SYSTEM			
Item No	Description	Size	Quantity
1	PVC	1"	200 ft

This is in addition to domestic water shown on isometrics referenced in section 3.5.1 of this document.

ATTACHMENT 7.2 (sheet 1 of 6)

Electrical / I&C Bulk Material List

Scope Set: BOP - WATER SYSTEMS

Prepared By: S. C. Shah

Date: 3/23/07

Reviewed By: [illegible]

Exterior Glovebox Cables

Sum of Qty XGB (ft)	
Ext. Cable Size/Type	Total
1/C 500kcmil	960
1/C #1/0 GND	400
1-3/c#2 w/1-#6gnd	270
1-3/c#6 w/1#10 gnd	630
1-3/c#12 w/gnd	1,615
1-2/c#12 w/gnd	1,640
1PR#16SH	11,230
50PR#16SH	100
Ethernet 8 Fiber Loose Tube 62.5/12.5 um Fiber Optic	1,400
Grand Total	18,245

All Raceway Types

Sum of Qty Rcwy (ft)	
RCWY	Total
1" IMC	120
3/4" IMC	2,455
3" RGS	200
3" IMC	40
Grand Total	2,810

From Equipment	To Equipment	Cable Estimates (Exterior GB)			Shared Rcwy/Tray	Raceway Estimates				Comments
		XGB Length (A) (ft)	Qty (A)	Cable size/type	Length (C) (ft)	Length (D) (ft)	Qty (D)	Size/Desc. (D)	Red	
ELNH-USS-001C,2A	CHW-CHU-001	55	6	1/C 500kcmil	0	35	2	3" RGS	N	
		70	2	1/C #1/0 GND	50	0	0		N	
ELNH-USS-001C,2B	CHW-CHU-002	50	6	1/C 500kcmil	0	30	2	3" RGS	N	
		60	2	1/C #1/0 GND	40	0	0		N	
ELNH-USS-001C,23	CHW-CHU-003	55	6	1/C 500kcmil	0	35	2	3" RGS	N	
		70	2	1/C #1/0 GND	50	0	0		N	
MCC-001C	CHW-P-001	100	1	1-3/c#2 w/1-#6gnd	50	30	1	3/4" IMC	N	
MCC-001C	CHW-P-003	70	1	1-3/c#2 w/1-#6gnd	40	10	1	3/4" IMC	N	
MCC-002C	CHW-P-002	100	1	1-3/c#2 w/1-#6gnd	50	30	1	3/4" IMC	N	
MCC-001C	CWS-P-001	95	1	1-3/c#6 w/1#10 gnd	55	20	1	1" IMC	N	
MCC-002C	CWS-P-002	105	1	1-3/c#6 w/1#10 gnd	65	20	1	1" IMC	N	
MCC-002C	CWS-P-003	115	1	1-3/c#6 w/1#10 gnd	75	20	1	1" IMC	N	
MCC-001C	CTW-CTW-001	95	1	1-3/c#6 w/1#10 gnd	55	20	1	1" IMC	N	
MCC-001C	CTW-CTW-002	105	1	1-3/c#6 w/1#10 gnd	65	20	1	1" IMC	N	

Attachment 7.2
Sht 3 of 6

From Equipment	To Equipment	Cable Estimates (Exterior GB)			Shared Rcwy/Tray	Raceway Estimates				
		XGB Length (A) (ft)	Qty (A)	Cable size/type	Length (C) (ft)	Length (D) (ft)	Qty (D)	Size/Desc. (D)	Red	Comments
MCC-002C	CTW-CTW-003	115	1	1-3/c#6 w/1#10 gnd	75	20	1	1" IMC	N	
MCC-001C	CTW-MIX001	95	1	1-3/c#12 w/gnd	35	40	1	3/4" IMC	N	
MCC-001C	HVAC-FAN-003	70	1	1-3/c#12 w/gnd	35	15	1	3/4" IMC	N	
MCC-002C	HVAC-FAN-012	100	1	1-3/c#12 w/gnd	40	40	1	3/4" IMC	N	
MCC-001C	CTW-HTR-001	90	1	1-3/c#12 w/gnd	55	15	1	3/4" IMC	N	
MCC-001C	CTW-HTR-002	100	1	1-3/c#12 w/gnd	65	15	1	3/4" IMC	N	
MCC-001C	CTW-HTR-003	110	1	1-3/c#12 w/gnd	75	15	1	3/4" IMC	N	
MCC-002C	CTW-HTR-0014	100	1	1-3/c#12 w/gnd	65	15	1	3/4" IMC	N	
MCC-002C	CTW-HTR-005	110	1	1-3/c#12 w/gnd	75	15	1	3/4" IMC	N	
MCC-002C	CTW-HTR-006	120	1	1-3/c#12 w/gnd	85	15	1	3/4" IMC	N	
MCC-001C	CTW-P-004	90	1	1-3/c#12 w/gnd	30	40	1	3/4" IMC	N	
MCC-002C	RFTS-CMP-XXX	90	1	1-3/c#12 w/gnd	40	30	1	3/4" IMC	N	
ELLV-PNL-001C	Safety Shower	100	1	1-2/c#12 w/gnd	0	80	1	3/4" IMC	N	
ELLV-PNL-001C	DCS-PNL-001	60	1	1-2/c#12 w/gnd	0	40	1	3/4" IMC	N	
ELLV-PNL-002C	DCS-PNL-002	80	1	1-2/c#12 w/gnd	0	60	1	3/4" IMC	N	

From Equipment	To Equipment	Cable Estimates (Exterior GB)			Shared Rcwy/Tray	Raceway Estimates				Comments
		XGB Length (A) (ft)	Qty (A)	Cable size/type	Length (C) (ft)	Length (D) (ft)	Qty (D)	Size/Desc. (D)	Red	
ELLV-PNL-001C	MISC. 120V CKTS.	70	10	1-2/c#12 w/gnd	0	50	10	3/4" IMC	N	
ELLV-PNL-002C	MISC. 120V CKTS.	70	10	1-2/c#12 w/gnd	0	50	10	3/4" IMC	N	
ELLV-PNL-002C	PLTA-CMP-XXX	70	1	1-3/c#12 w/gnd	0	50	1	3/4" IMC	N	
ELNH-MCC-24M	CHW-P-004	110	1	1-3/c#12 w/gnd	40	50	1	3/4" IMC	N	
ELNH-MCC-31M	CHW-P-005	110	1	1-3/c#12 w/gnd	40	50	1	3/4" IMC	N	
Cooling Tower Instrumentation	CTW-INST-100	210	14	1PR#16SH	40	150	1	3/4" IMC	N	J-J8-K-00031
Cooling Tower Instrumentation	CTW-CAB-510	160	14	1PR#16SH	60	80	1	3/4" IMC	N	J-J8-K-00031
Cooling Tower Pumps	CTW-INST-100	160	5	1PR#16SH	40	100	1	3/4" IMC	N	J-J8-K-00031
Cooling Tower Pumps	CTW-CAB-510	100	5	1PR#16SH	60	20	1	3/4" IMC	N	J-J8-K-00031
Chiller, General and Condenser	CTW-INST-100	110	20	1PR#16SH	0	90	1	3/4" IMC	N	J-J8-K-00031
Chiller, General and Condenser	CTW-CAB-510	80	20	1PR#16SH	0	60	1	3/4" IMC	N	J-J8-K-00031
Chilled Water Pumps	CTW-INST-100	120	5	1PR#16SH	0	100	1	3/4" IMC	N	J-J8-K-00031

From Equipment	To Equipment	Cable Estimates (Exterior GB)			Shared Rcwy/Tray	Raceway Estimates				
		XGB Length (A) (ft)	Qty (A)	Cable size/type	Length (C) (ft)	Length (D) (ft)	Qty (D)	Size/Desc. (D)	Red	Comments
Chilled Water Pumps	CTW-CAB-510	70	5	1PR#16SH	0	50	1	3/4" IMC	N	J-J8-K-00031
CTW-INST-100	CTW-CAB-510	100	1	50PR#16SH	40	40	1	3" IMC	N	J-J8-K-00031, 44 count actual
CTW-CAB-510	ICS-CAB-060	1400	1	Ethernet 8 Fiber Loose Tube 62.5/12.5 um Fiber Optic	1320	60	1	3/4" IMC	N	J-J8-K-00031, Based on using existing culvert - possibly shared - see ICS Bulk Takeoff for Network wiring to ICS-CAB-060
ELLV-PNL-001C	CHW-INST-100	110	1	1-3/c#12 w/gnd	40	50	1	3/4" IMC	N	J-J8-K-00031, 2 separate 120 VAC circuits - Cab in Southeast corner of Chiller building.
ELLV-PNL-001C	CTW-CAB-510	70	1	1-3/c#12 w/gnd	0	50	1	3/4" IMC	N	J-J8-K-00031, 2 separate 120 VAC circuits - Cab in Southwest corner of Chiller

From Equipment	To Equipment	Cable Estimates (Exterior GB)			Shared Rcwy/Tray	Raceway Estimates				
		XGB Length (A) (ft)	Qty (A)	Cable size/type	Length (C) (ft)	Length (D) (ft)	Qty (D)	Size/Desc. (D)	Red	Comments
										building.
ELLV-PNL-001C	CTW-CNSL-500	70	1	1-3/c#12 w/gnd	0	50	1	3/4" IMC	N	J-J8-K-00031, 2 separate 120 VAC circuits - Cab in Southwest corner of Chiller building.

ATTACHMENT 7.3

C/S/A Bulk Material List

Item No.	Description of Item	Size	Quantity	Remarks
1	Base Plates	12"x12"x ¾" Tk.	75 ea	
2	A-36 Maxi Bolts	¾" Dia.	300 ea	
3	A-36 Maxi Bolts	½ " Dia.	57 ea	
4	A-36 Maxi Bolts	5/8 " Dia.	18 ea	
5	A-36 Maxi Bolts	1" Dia.	32 ea	
6	Sch. 80 Pipe	2" Dia.	15 Ft.	
7	Steel Beam	W6x25	72 Ft.	
8	Tube Steel	TS 4x4x 0.5	137 Ft	
9	Tube Steel	TS 3x3x0.375	144 Ft	
10	Pipe Clamps	12" Dia.	21 ea	Hanger
11	Pipe Clamps	12" Dia.	2 ea	Axial
12	Pipe Clamps	8" Dia.	3 ea	
13	Pipe Clamps	4" Dia.	6 ea	
14	Threaded Rods	1" Dia.	288 Ft.	
15	Upper Attachment	For 1" Dia. Rod	30 ea	
16	Steel Lugs	4"x2"x1" Tk.	8 ea.	Axial

EXCAVATION		
Item No	**Description**	**Quantity**
1	Sanitary Sewer Line	90 cubic yards
2	Domestic Water Line	45 cubic yards
3	Chilled Water Lines	375 cubic yards

ATTACHMENT 7.4

Equipment No. (System - EqType - Eqpmt #) WBS	Equipment Description	Manufacturer	Model No.	Ref.Document	Discipline	Procurement Level	Area	Facility Code	Bldg	Eq. Status	Functional Classification	Est. Cost	Cost Basis
CHW - VSL - 001 01.30.02.34.01.01.01.08.04.02	Expansion Tank	Creator ERICTA		M-M5-K-01959 M-M6-K-02312 M-DS-K-00143	M		K	KL	LATER	DESIGN	PS		
CHW - VSL - 002 01.30.02.34.01.01.01.08.04.02	Air Separator	Creator ERICTA		M-M5-K-01959 M-M6-K-02312 M-DS-K-00144	M		K	KL	LATER	DESIGN	PS		
CHW - VSL - 003 01.30.02.34.01.01.01.08.04.02	Chemical Feed Tank	Creator ERICTA		M-M5-K-01959 M-M6-K-02312 M-DS-K-00145	M		K	KL	LATER	DESIGN	PS		
CHW - CHU - 001 01.30.02.34.01.01.01.08.04.02	Chiller	Creator ERICTA		M-M5-K-01959 M-M6-K-02313 M-DS-K-00137	M		K	KL	LATER	DESIGN	PS		
CHW - CHU - 002 01.30.02.34.01.01.01.08.04.02	Chiller	Creator ERICTA		M-M5-K-01959 M-M6-K-02313 M-DS-K-00137	M		K	KL	LATER	DESIGN	PS		
CHW - CHU - 003 01.30.02.34.01.01.01.08.04.02	Chiller	Creator ERICTA		M-M5-K-01959 M-M6-K-02313 M-DS-K-00137	M		K	KL	LATER	DESIGN	PS		
CHW - P - 001 01.30.02.34.01.01.01.08.04.02	Chilled WaterPump	Creator ERICTA		M-M5-K-01959 M-M6-K-02312 M-DS-K-00138	M		K	KL	LATER	DESIGN	PS		
CHW - P - 002 01.30.02.34.01.01.01.08.04.02	Chilled Water Pump	Creator ERICTA		M-M5-K-01959 M-M6-K-02312 M-DS-K-00138	M		K	KL	LATER	DESIGN	PS		
CHW - P - 003 01.30.02.34.01.01.01.08.04.02	Chilled Water Pump	Creator ERICTA		M-M5-K-01959 M-M6-K-02312 M-DS-K-00138	M		K	KL	LATER	DESIGN	PS		

ATTACHMENT 7.4

Equipment No. (System - EqType - Eqpmt #) WBS	Equipment Description	Manufacturer	Model No.	Ref.Document	Discipline	Procurement Level	Area	Facility Code	Bldg	Eq. Status	Functional Classification	Est. Cost	Cost Basis
CHW - P - 004 01.30.02.34.01.01.01.08.04.02	Cooling Water Pump	Creator Cameron		M-M5-K-01962 M-M6-K-02291 M-DS-K-00151	M		K	KL	105000	DESIGN	PS		
CHW - HTEX - 001 01.30.02.34.01.01.01.08.04.02	Cooling Water Heat Exchanger	Creator Cameron		M-M5-K-01962 M-M6-K-02291 M-DS-K-00150	M		K	KL	105000	DESIGN	PS		
CHW - P - 005 01.30.02.34.01.01.01.08.04.02	Cooling Water Pump (Stand-by)	Creator Cameron		M-M5-K-01962 M-M6-K-02291 M-DS-K-00151	M		K	KL	105000	DESIGN	PS		
CHW - CNSL - 500 01.30.02.34.01.01.01.08.04.02	Control Console, Chilled Water	Creator Manucy		J-J8-K-00031	I&C		K	KL	LATER	DESIGN	PS		
CHW - INST - 100 01.30.02.34.01.01.01.08.04.02	Instrument Rack, Chilled Water	Creator Manucy		J-J8-K-00031	I&C		K	KL	LATER	DESIGN	PS		
CHW - CAB - 500 01.30.02.34.01.01.01.08.04.02	PLC I/O Cabinet, Chilled Water	Creator Manucy		J-J8-K-00031	I&C		K	KL	LATER	DESIGN	PS		
CHW - CAB - 510 01.30.02.34.01.01.01.08.04.02	PLC Processor, Chilled Water	Creator Manucy		J-J8-K-00031	I&C		K	KL	LATER	DESIGN	PS		

ATTACHMENT 7.4

Equipment No. (System - EqType - Eqpmt #) WBS	Equipment Description	Manufacturer	Model No.	Ref.Document	Discipline	Procurement Level	Area	Facility Code	Bldg	Eq. Status	Functional Classification	Est. Cost	Cost Basis
CTW - CTW - 001 01.30.02.34.01.01.01.08.04.03	Cooling Tower, one cell	Creator ERICTA		M-M5-K-01959 M-M6-K-02314 M-DS-K-00139	M		K	KL	LATER	DESIGN	PS		
CTW - CTW - 002 01.30.02.34.01.01.01.08.04.03	Cooling Tower, one cell	Creator ERICTA		M-M5-K-01959 M-M6-K-02314 M-DS-K-00139	M		K	KL	LATER	DESIGN	PS		
CTW - CTW - 003 01.30.02.34.01.01.01.08.04.03	Cooling Tower, one cell (Stand-by)	Creator ERICTA		M-M5-K-01959 M-M6-K-02314 M-DS-K-00139	M		K	KL	LATER	DESIGN	PS		
CTW - P - 001 01.30.02.34.01.01.01.08.04.03	Cooling Tower Water Pump	Creator ERICTA		M-M5-K-01959 M-M6-K-02314 M-DS-K-00140	M		K	KL	LATER	DESIGN	PS		
CTW - P - 002 01.30.02.34.01.01.01.08.04.03	Cooling Tower Water Pump	Creator ERICTA		M-M5-K-01959 M-M6-K-02314 M-DS-K-00140	M		K	KL	LATER	DESIGN	PS		
CTW - P - 003 01.30.02.34.01.01.01.08.04.03	Cooling Tower Water Pump (Stand-by)	Creator ERICTA		M-M5-K-01959 M-M6-K-02314 M-DS-K-00140	M		K	KL	LATER	DESIGN	PS		
CTW - P - 004 01.30.02.34.01.01.01.08.04.03	Ozone Treatment Pump	Creator ERICTA		M-M5-K-01959 M-M6-K-02314 M-DS-K-00141	M		K	KL	LATER	DESIGN	PS		
CTW - MIX - 001 01.30.02.34.01.01.01.08.04.03	Ozone Treatment Stystem	Creator ERICTA		M-M5-K-01959 M-M6-K-02314 M-DS-K-00141	M		K	KL	LATER	DESIGN	PS		
CTW - INST - 100 01.30.02.34.01.01.01.08.04.03	Instrument Rack, Cooling Tower	Creator Manucy		J-J8-K-00031	I&C		K	KL	LATER	DESIGN	PS		

ATTACHMENT 7.4

Equipment No. (System - EqType - Eqpmt #) WBS	Equipment Description	Manufacturer	Model No.	Ref.Document	Discipline	Procurement Level	Area	Facility Code	Bldg	Eq. Status	Functional Classification	Est. Cost	Cost Basis
CTW - CAB - 600 01.30.02.34.01.01.01.08.04.03	PLC I/O Cabinet, Cooling Tower	Creator Manucy		J-J8-K-00031	I&C		K	KL	LATER	DESIGN	PS		
CTW - CC - 001 01.30.02.34.01.01.01.08.04.03	Conductivity Controller	Creator T. Edwards		M-M5-K-01959 M-M6-K-02314 M-DS-K-00141	M		K	KL	LATER	DESIGN	PS		

For Health Hazard Applications

Job Name _____ Contractor _____

Job Location _____ Approval _____

Engineer _____ Contractor's P.O. No. _____

Approval _____ Representative _____

Series 909

Reduced Pressure Zone Assemblies

909 Sizes: ¾", 1" (20, 25mm)
909M1 Sizes: 1¼", 1½", 2" (32, 40, 50mm)

Series 909 Reduced Pressure Zone Assemblies are designed to provide superior cross-connection control protection of the potable water supply in accordance with national plumbing codes and containment control for water authority requirements. This series can be utilized in a variety of installations, including health hazard cross-connections in plumbing systems or for containment at the service line entrance. With its exclusive, design incorporating the patented "air-in/water-out" principle it provides maximum relief valve discharge during the emergency conditions of combined backsiphonage and backpressure with both checks fouled. Model 909QT, standardly furnished with full port, resilient seated and bronze ball valve shutoffs. Sizes ¾" and 1" (20 and 25mm) shutoffs have tee handles.

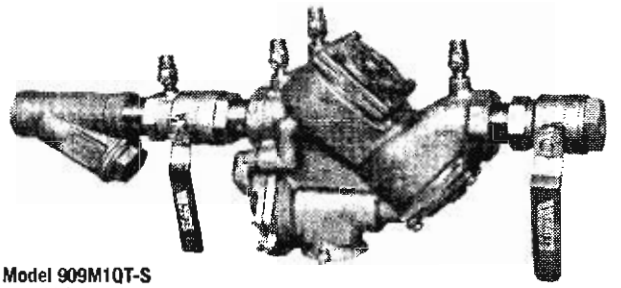

Model 909M1QT-S
1½" (40mm)

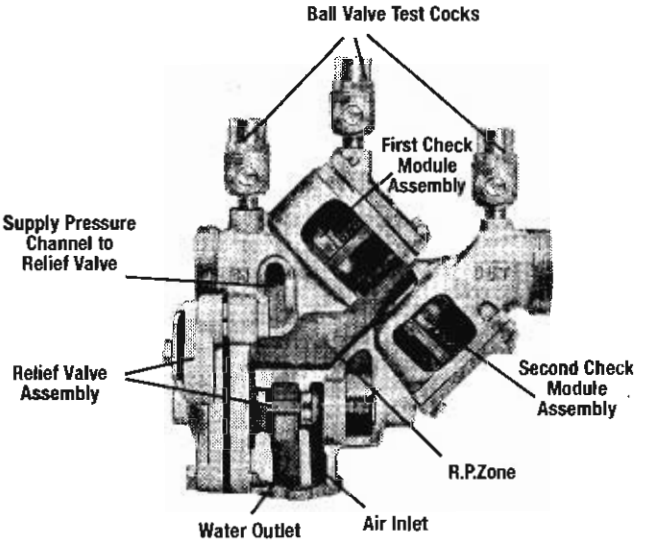

Features

- Modular design
- Replaceable seats
- Compact for installation ease
- Horizontal or vertical (up or down) installation
- No special tools required for servicing

Specifications

A Reduced Pressure Zone Assembly shall be installed at each cross-connection to prevent backsiphonage and backpressure of hazardous materials into the potable water supply. The assembly shall consist of a pressure differential relief valve located in a zone between two positive seating check valves. Backsiphonage protection shall include provision to admit air directly into the reduced pressure zone via a separate channel from the water discharge channel, or directly into the supply pipe via a separate vent. The assembly shall include two tightly closing shutoff valves before and after the assembly, test cocks and a protective strainer upstream of the No. 1 shutoff valve. The assembly (specify Model 909 for temperatures up to 140°F (60°C) or Model 909HW for temperatures up to 210°F (99°C)) shall meet the requirements of ASSE Std. 1013; AWWA Std. C-511-92 CSA B64.4; FCCCHR of USC Manual Section 10. Listed by IAPMO (UPC). SBCCI (Standard Plumbing code). The assembly shall be a Watts Regulator Company Series 909QTS or 909QTSHW.

Now Available
WattsBox Insulated Enclosures.
For more information, send for literature ES-WB.

WATTS®

Watts product specifications in U.S. customary units and metric are approximate and are provided for reference only. For precise measurements, please contact Watts Technical Service. Watts reserves the right to change or modify product design, construction, specifications, or materials without prior notice and without incurring any obligation to make such changes and modifications on Watts products previously or subsequently sold.

M-SOW-K-00022, Rev. 0
pg 35 of 38
Attachment 7.5 sht 2 of 2

Models

Suffix

AQT	Elbow fittings for 360° rotation ¾" – 2" only
C&T	Cap and tether test cocks
PC	Internal polymer coating
QT	Quarter-turn ball valves
S	Bronze strainer
HW	Stainless steel check modules for hot and harsh water conditions
LF	Without shutoff valves
LH	Locking ball valve handles (open position)
HC	Inlet/outlet fire hydrant fitting (2" only)

Prefix

C	Clean and check strainer - ¾" and 1" (20 and 25mm) only
U	Union - ¾" and 1" (20 and 25mm) only
FAE	Flanged adapter ends - 1¼", 1½", 2" (32, 40, 50mm) only

NOTE: The installation of a drain line is recommended. When installing a drain line, an air gap is necessary.

Approvals

Listed by IAPMO

Listed by SBCCI

1013 B64.4

*Approved by the Foundation for Cross-Connection Control and Hydraulic Research at the University of Southern California.

Horizontal and vertical "flow-up" approval on ¾" and 1" sizes (models 909QT, 909PCQT, and U909QT).

Pressure — Temperature

Temperature Range: 33°F – 140°F (5°C – 60°C) continuos, 180°F (82°C) intermittent

Maximum Working Pressure: 175psi (12.06 bar)

Series 909HW:

Temperature Range: 33°F – 210°F (5°C – 99°C)

Maximum Working Pressure: 175psi (12.06 bar)

Materials

Body:	Bronze
Check Seats:	909 Celcon®
Relief Valve Seats:	Stainless steel 909HW
Test Cocks:	Bronze

Celcon® is a registered trademark of Celanese, Limited

Connections

¾", 1" (19, 25mm) 909-NPT Female threaded body connection.

1¼" – 2" (32 – 50mm) 909-M1-NPT Male threaded body connection.

Standards

AWWA C-511-92

FCCCHR of USC Manual Section 10

IAPMO (UPC), SBCCI (Standard Plumbing code)

How it Operates

The unique relief valve construction incorporates two channels: one for air, one for water. When the relief valve opens, as in the accompanying air-in/water-out diagram, the right-hand channel admits air to the top of the reduced pressure zone, relieving the zone vacuum. The channel on the left then drains the zone to atmosphere. Therefore, if both check valves foul, and simultaneous negative supply and positive backpressure develop, the relief valve uses the air-in/water-out principle to stop potential backflow.

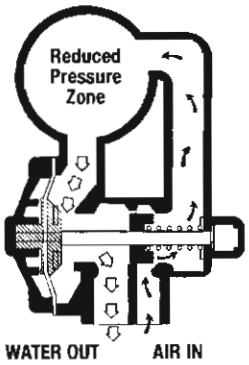

Patent# 4,241,752

Dimensions — Weights

When installing a drain line use 909AG series Air Gaps on Series 909 backflow preventers. *909EL series elbows are for air gaps on backflow preventers in vertical installations.

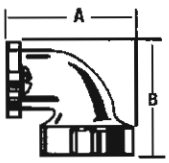

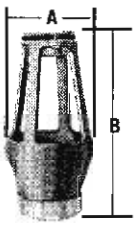

Series 909AG Air Gaps

		909 DRAIN		OUTLET		DIMENSIONS				WEIGHTS	
Iron Body		Sizes		Sizes		A		B			
No.	*Desc.*	*in.*	*mm*	*in.*	*mm*	*in.*	*mm*	*in.*	*mm*	*lbs.*	*kg.*
909-AG-C	Air Gap	¾,1	19.25	1	25	3¼	83	4⅞	124	1½	.7
909-EL-C	Elbow*	¾,1	19.25	–	–	2⅜	60	2⅜	60	⅜	.2
909-AG-F	Air Gap	1¼-2	32-50	2	50	4⅜	111	6¾	171	3¼	1.5
909-EL-F	Elbow*	1¼-2	32-50	–	–	3⅝	92	3⅝	92	2	.9

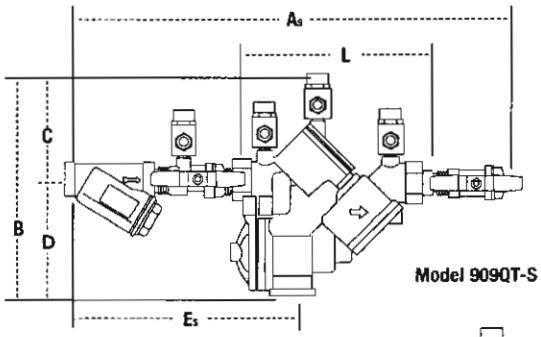

Model 909QT-S

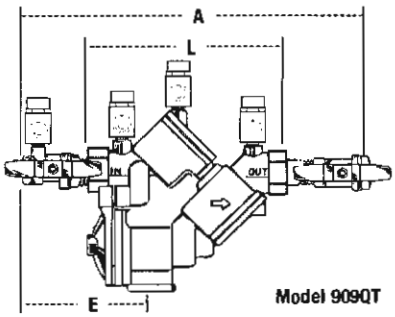

Model 909QT

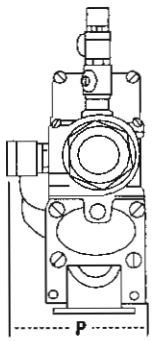

Eye wash example

SPEAKMAN

SE-6000 SERIES ROUGH-IN AND REPLACEMENT PART COMPONENTS

M-SOW-K-00022, Rev. 0
Pg. 36 of 38
Attachment 7.6
Sht 1 of 1

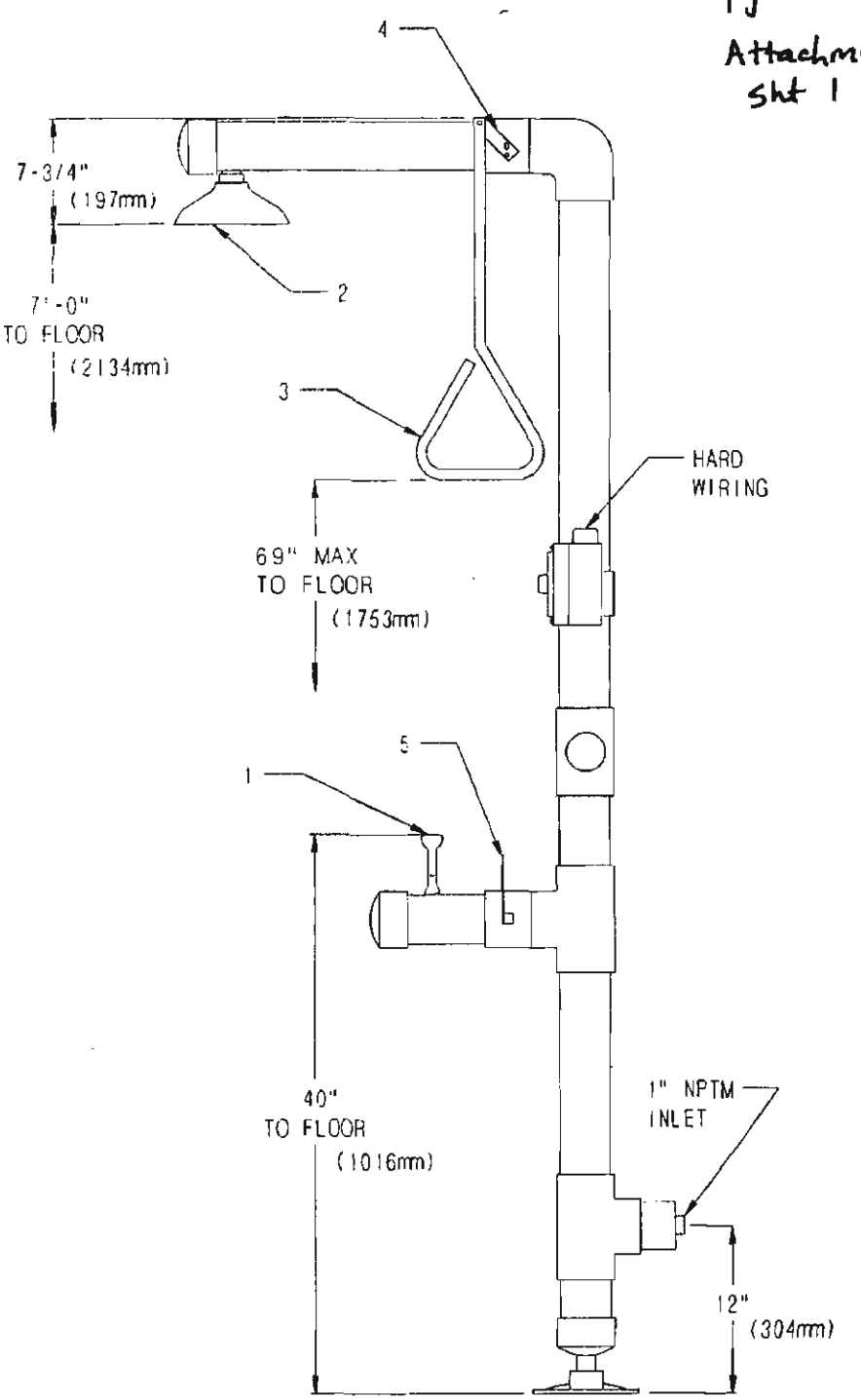

~~M-DCP-K-98007 Rev~~ ~~PG 8 of 11~~
MQL 3/22/07
M-SOW-K-00022, Rev. 0
pg 37 of 38
Attachment 7.7 Sht 1 of 2

- Heavy-gauge walls
- One-piece wall design prevents water leakage
- Molded-in soap dish and shampoo holders
- Two handrails for safety
- Textured, non-slip floor
- Rust-resistant; An inexpensive alternative for camps, cabins, lodges, and all-weather locations
- Easy-to-clean walls
- Assembles in minutes
- Includes all installation hardware

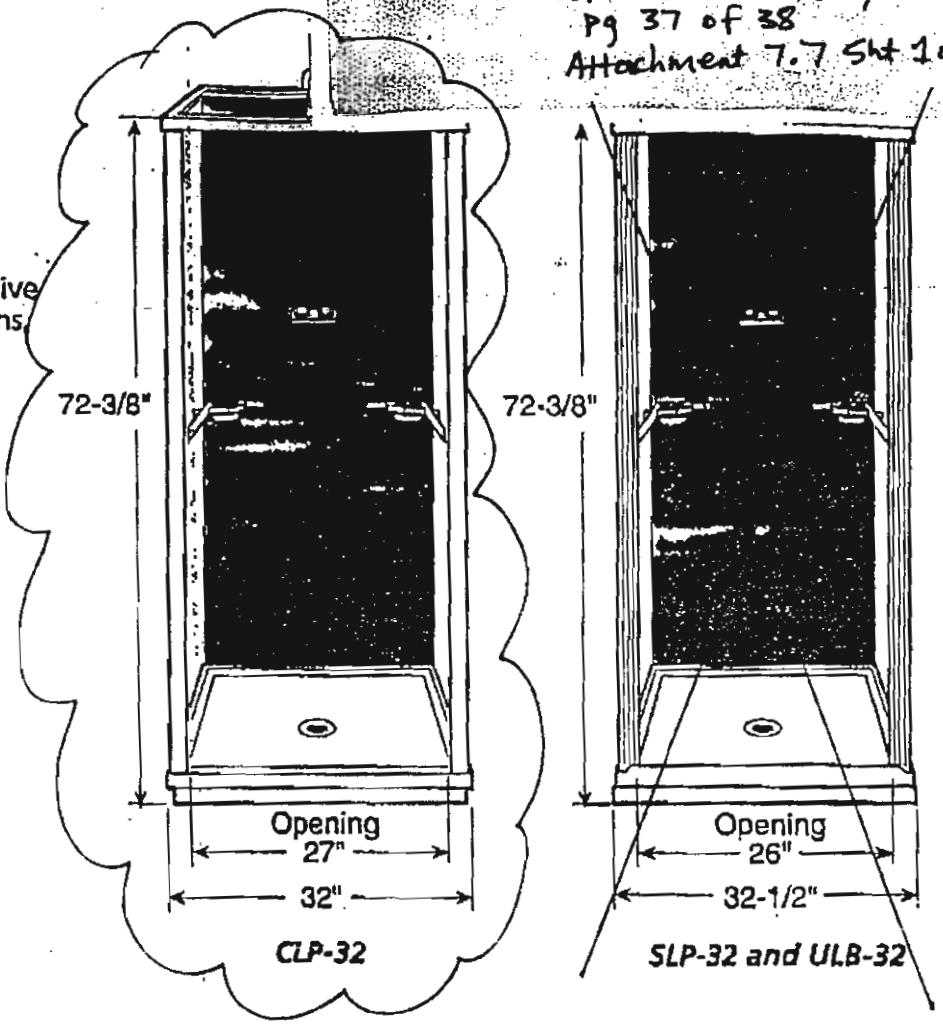

ASB offers three types of shower stalls:

[illegible]	[illegible]	[illegible]	[illegible]
No-caulk drain	✔	✔	✔
Shower head	✔	✔	✔
Shower curtain	✔	✔	✔
32" x 32" base	Injection Molded	Structural Foam	Structural Foam
Faucets	Plastic	Plastic	Deluxe Brass
Front rail	Plastic	Aluminum	Aluminum

American Shower & Bath Corporation
540 Glen Avenue • Moorestown, NJ 08057 • Phone: 800-355-2721 • Fax: 609-235-9262

Made in the USA

American Shower & Bath
151 HELLER PLACE, BELLMAWR, NJ 08031
TELEPHONE: (609) 931-0200 • FAX (609) 931-0201

~~M-DOW-K-98007~~
~~Rev 0~~ MOE 3/22/07
~~Pg 9 of 14~~

CLP 32" SHOWER STALL PARTS AND INSTALLATION

1. DETERMINE LOCATION OF SHOWER BASE DRAIN PIPE USING DIMENSIONS SHOWN BELOW.
2. DRAIN SYSTEMS IS DESIGNED FOR 2" I.P.S. PIPE, IF 1-1/2" PIPE IS BEING USED IT WILL BE NECESSARY TO PURCHASE REDUCING FITTINGS.
3. AROUND DRAIN PIPE PROVIDE A MINIMUM OF 4-1/2" DEEP CLEARANCE TO CLEAR DRAIN HOUSING ON BASE.
4. MAKE SURE THAT FLOOR UNDER BASE IS LEVEL. VISIBL DRAIN PIPE SHOULD BE STRAIGHT UP AND SOLIDLY HEL TO THE FLOOR.
5. TO INSTALL DRAIN ASSEMBLY REFER TO PAGE ENTITLED 'DRAIN ASSEMBLY INSTRUCTIONS.'

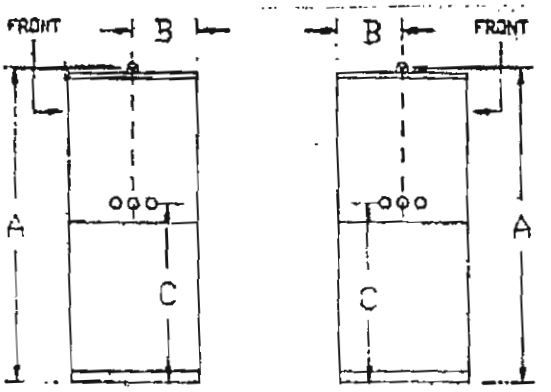

M-SOW-K-00022, Rev.0
pg 38 of 38
Attachment 7.7
sht 2 of 2

DIMENSIONS

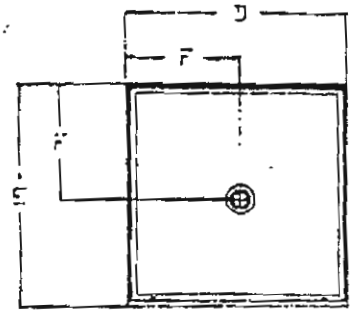

MODEL	A	B	C	D	E	F	
KD-CLP-32W	73-7/16	16	41	32-1/4	32-1/4	16-1/8	INCHES
	186.5	40.6	104.1	81.9	81.9	40.9	CENTIMETERS

FIG. 1

FIGURE 1, SHOWS A TYPICAL BASE INSTALLATION, FOR DETAILED INSTALLATION OF THE DRAIN ASSEMBLY REFER TO PAGE ENTITLED 'DRAIN ASSEMBLY INSTRUCTIONS.'

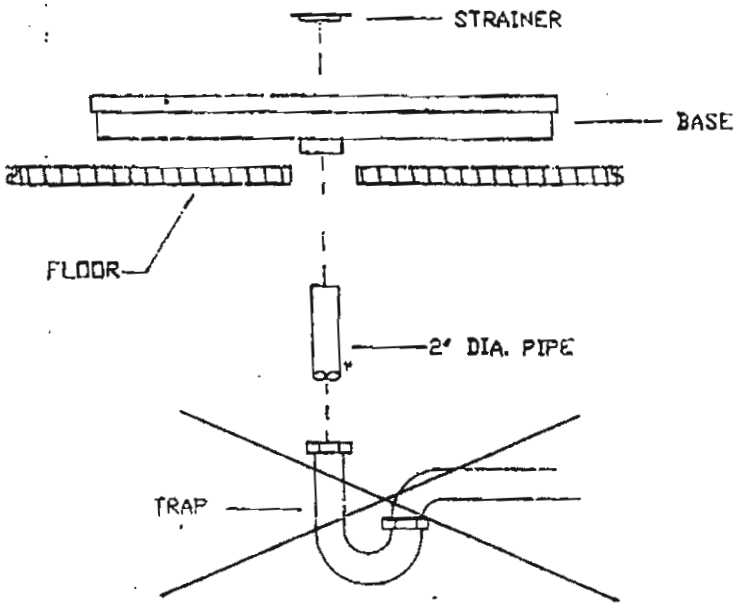

PLUTONIUM DISPOSITION PROJECT (U)

Project M09A

SCOPE OF WORK

M-SOW-K-00026 Revision 0
for
Green Fuel Disassembly System (U)

Originated by: Marc Cameron Date: 4/11/07
Marc Cameron
Mechanical Engineer

Reviewed by: N. Shanmuganathan Date: 4/11/2007
Nagarajan Shanmuganathan
Principal Engineer

Approved by: Clayton Holloway Date: 4/11/07
Clayton Holloway
Mechanical Lead

Approved by: Roderick King Date: 4/12/07
Roderick King
Electrical/I&C Lead

Approved by: Ghada S. Elchoufi Date: 4/11/07
Ghada Elchoufi
C/S/A Lead

Approved by: Date: 4-11-07
Drew Negus
Plant Design Lead

Approved by: John Hammond Date: 4-12-07
John Hammond
Construction Lead

Approved by: Date: 4-12-07
Kraig Oldfield
Design Authority

Approved by: Date: 4/12/07
B.C. Patel
Project Engineer

UNCLASSIFIED
DOES NOT CONTAIN UNCLASSIFIED CONTROLLED NUCLEAR INFORMATION

ADC/RO: Ghada Elchoufi

Date: 4/11/07

Revision Page

Revision	Revision Date	Affected Section	Description of Change
0	4/12/07	N/A	Initial Revision

Table of Contents

Section **Page**

1.0 SCOPE 4
- 1.1 General Description 4
- 1.2 Background 4

2.0 ACRONYMS/ABBREVIATIONS 5

3.0 DESCRIPTION OF PHYSICAL WORK 5
- 3.1 Performance Category and Functional Classification (SS, PS) 5
- 3.2 Mechanical/Nuclear/Process 6
- 3.3 Instrumentation and Controls 8
- 3.4 Electrical 8
- 3.5 Plant Design 9
- 3.6 Civil/Structural/Architectural 9

4.0 ASSUMPTIONS 10
- 4.1 General Assumptions 10
- 4.2 Specific Assumptions 10
- 4.3 High Business Decision Estimate Range (BDER) 11
- 4.4 Maintenance Strategy 11

5.0 TECHNOLOGY DEVELOPMENT ISSUES 11

6.0 REFERENCES 11
- 6.1 Drawing List 11
- 6.2 Design Input Documents 12
- 6.3 Applicable SRS & Industry Codes, Guides and Standards 12
- 6.4 Related Scopes of Work (SOW) 13
- 6.5 Miscellaneous 13

7.0 ATTACHMENTS 13
- Attachment 1 – Bulk Electrical Materials 14
- Attachment 2 – Bulk C/S/A Materials 16

1.0 SCOPE

1.1 General Description

This Scope of Work (SOW) covers the Green Fuel Disassembly System (GFDS) for the Plutonium Disposition Project. The GFDS will receive Hanford Unirradiated Fuel Packages (HUFPs). Each HUFP contains one Core Component Container (CCC). There will be a total of 13 CCC's received by PUD

- 9 containing a total of 56 Fast Flux Test Facility (FFTF) Driver Fuel Assemblies (DFA) (217 pins per assembly totaling 12152 pins)
- 4 containing a total of 21 Ident-69s (4125 pins).

Each pin contains approximately 150 pressed and sintered mixed uranium/plutonium oxide pellets. One DFA or Ident will be removed from a CCC at a time and moved into the GFDS air hood. Either a pin bundle from a DFA or individual pins from an Ident-69 will be removed and transferred through an airlock into the GFDS glovebox. Once inside the glovebox, these pins will be disassembled and the fuel placed in Pin Fuel Cans for transport to the Feed Preparation System (FPS). The non-fuel metal will be discarded as waste.

1.2 Background

The Office of Environmental Management has approximately 13 metric tons (MT) of plutonium in approximately 21 MT bulk materials without any defined disposition path. The Plutonium Disposition (PUD) Project is critical to meet the Department of Energy's strategic goal of providing a responsible resolution to the permanent disposal of the nation's excess high-level radioactive materials and waste; and to enable the cleanup of Environmental Management sites.

The Plutonium Vitrification Facility (PVF) will be located at the K-Area Complex (KAC) to disposition up to approximately 13 Metric Tons (MT) of Environmental Management (EM) owned surplus plutonium. The facility will utilize a vitrification process to vitrify plutonium into a lanthanide borosilicate (LaBS) glass matrix. This glass will be packaged into bagless transfer cans and placed inside a Defense Waste Processing Facility (DWPF) type canister. The canister will be transported to DWPF and filled with High Level Waste (HLW) glass. The DWPF canisters will be stored in the Glass Waste Storage Buildings and later transported to the geologic repository at Yucca Mountain.

This Scope of Work (SOW) has been developed for the purpose of facilitating construction cost and schedule estimates for the Conceptual Design Report (CDR) on the PUD project. The input to this SOW was the approved technical baseline consisting of a Facility Design Description (FDD) and associated System Design Descriptions (SDD). Every intent has been made to assure alignment and consistency between this SOW and the appropriate sections of the technical baseline, in order to provide accurate estimates. This SOW is not a PUD technical baseline document. A more detailed description of the system can be found in the associated SDD listed in the reference section.

A **HOLD** is placed to identify information that is preliminary in nature, results from a design uncertainty, originates from insufficient documentation, needs verification, or identifies a discrepancy. A **TBD** is placed to identify places in the text where numeric values or descriptive information is not available at the time that the current revision of the SOW is released.

2.0 ACRONYMS/ABBREVIATIONS

Acronym / Abbreviation	Definition
CCC	Core Component Container
DFA	Driver Fuel Assembly
DOE	Department of Energy
FDD	Facility Design Description
FFTF	Fast Flux Test Facility
FPS	Feed Preparation System
GFDS	Green Fuel Disassembly System
GS	General Support
HUFP	Hanford Unirradiated Fuel Package
I&C	Instrumentation and Controls
KAC	K Area Complex
MC&A	Material Control and Accountability
MCC	Motor Control Center
MT	Metric Tons
PS	Production Support
PUD	Plutonium Disposition
PUV	Plutonium Vitrification
PVF	Plutonium Vitrification Facility
SC	Safety Class
SDD	System Design Description
SOW	Scope of Work
SRS	Savannah River Site
SS	Safety Significant
TBD	To Be Determined
WSRC	Washington Savannah River Company

3.0 DESCRIPTION OF PHYSICAL WORK

3.1 Performance Category and Functional Classification (SS, PS)

3.1.1 Performance Category

3.1.1.1 The performance category for all functions associated with the Green Fuel Disassembly System is PC-2 (Refer to G-FDD-K-00001).

3.1.2 Functional Classification

3.1.2.1 The Green Fuel Disassembly System shall be designed in accordance with the requirements of WSRC Manual WSRC-E7, Conduct of Engineering and Technical Support Procedure 2.25 Rev. 14, “Functional Classification”.

3.1.2.2 All equipment in the Green Fuel Disassembly System except the glovebox and air hood falls under the Functional Classification, Production Support (PS) (Refer to G-FDD-K-00001).

3.1.2.3 The Green Fuel Disassembly System Glovebox and Air Hood are Functional Classification Safety Significant (SS).

3.2 Mechanical/Nuclear/Process

3.2.1 Green Fuel Disassembly System

3.2.1.1 Refer to the basic block flow diagram M-M8-K-00019 and area layout drawing SK-DE-GFDS-0003 for the Green Fuel Disassembly System. This system is manually operated using hoists, cranes, saws, winches, etc. to disassemble HUFPs and load Pin Fuel Cans with Green Fuel to be transported to the Feed Preparation System (FPS). The major components (Quantity 1 each unless otherwise noted) are:

- Air Hood
  - Equipment No. GBS-HOOD-005
- Glovebox
  - Equipment No. GBS-GB-015
- Crane
  - Equipment No. GFDS-CRN-001
- DFA/Ident Handler
  - Equipment No. GFDS-MAN-001
- Portaband Saw
  - Equipment No. GFDS-SAW-001
- Winch
  - Equipment No. GFDS-HOI-001
- Glovebox Hoist
  - Equipment No. GFDS-HOI-002
- Rotary Saw (2 each)
  - Equipment No. GFDS-SAW-002 and GFDS-SAW-003
- Rod Press
  - Equipment No. GFDS-PRES-001

3.2.2 Air Hood

3.2.2.1 The Air Hood is designed to accept and disassemble a DFA or Ident-69. Refer to drawing SK-DE-GFDS-0001 for Air Hood dimensions and layout, drawing M-M5-

K-01968 for Air Hood air flow rate requirements, and specification M-SPP-K-00059 for the general air hood requirements.

3.2.2.2 The Air Hood will contain a Portaband Saw and Winch to aid in disassembly.

3.2.2.3 The Air Hood will be provided with room air for ventilation and will be exhausted into the building exhaust sand filter.

3.2.3 Glovebox

3.2.3.1 The Glovebox is designed to accept and disassemble pin bundles or pins and fill pin fuel cans with the fuel before transporting them to the Feed Preparation System (FPS). Refer to drawing SK-DE-GFDS-0001 for glovebox dimensions and layout and specification M-SPP-K-00059 for the general glovebox requirements. Refer to M-M5-K-01968 for glovebox air flow rate requirements.

3.2.3.2 The Glovebox will contain a Glovebox Hoist, two Rotary Saws, and a Rod Press to aid in disassembly.

3.2.3.3 The Glovebox will be provided with room air for ventilation and will be exhausted through a HEPA filter into the building exhaust sand filter.

3.2.4 Crane

3.2.4.1 The Crane is designed to move HUFPs to and from storage, remove the CCC from the HUFP, and remove the DFA or Ident-69 from the CCC and transport it to the DFA/Ident Handler (Refer to M-DS-K-00112).

3.2.5 DFA/Ident Handler

3.2.5.1 The DFA/Ident Handler is designed to rotate the DFA or Ident-69 from a vertical to a horizontal position (Refer to M-DS-K-00113).

3.2.5.2 The DFA/Ident Handler will be equipped with wheels for easy movement over to the Air Hood where a forklift will be used to lift the DFA or Ident-69 into the Air Hood.

3.2.6 Portaband Saw

3.2.6.1 The Portaband Saw is located in the Air Hood and is designed to cut open a DFA or Ident-69 so that the pins can be removed (Refer to M-DS-K-00117).

3.2.7 Winch

3.2.7.1 The Winch is located inside the Air Hood. It is designed to remove the duct from around the fuel pin bundles or individual fuel pins from a DFA or Ident-69, respectively (Refer to M-DS-K-00119).

3.2.8 Rotary Saw

3.2.8.1 The Rotary Saws (2) are located inside the Glovebox and are designed to cut open each end of a fuel pin so that the fuel can be removed via the Rod Press (Refer to M-DS-K-00118).

3.2.9 Rod Press

3.2.9.1 The Rod Press is designed to push the fuel pellets from a pin after it has been cut at both ends by the Rotary Saws.

3.3 Instrumentation and Controls

3.3.1 Material Control and Accountability (MC&A)

Green Fuel Disassembly System contains the following instrumentation for MC&A. Refer to Attachment 1 – Bulk Electrical Materials for cable and conduit descriptions and quantities.

3.3.1.1 Cables and equipment associated with the MC&A system are designated as "Red" (i.e. classified) and shall be installed per requirements of S-SRI-K-00005 (e.g. marking, separation) and security plan documents (later).

3.3.1.2 One Gamma Isotopic System, GFDS-GRIS-001, for the MC&A system. Refer to data sheets J-JD-K-00046 and drawing J-J8-K-00048

3.3.1.3 One Pin Fuel Can Scale, GFDS-SCL-001, located in the Green Fuel Glovebox. Refer to Data Sheet J-JD-K-00047 and drawing J-J8-K-00048..

3.3.1.4 One Active/Passive Neutron Multiplicity Counter, GFDS-NCC-001, for measuring neutron activity of Green Fuel. Refer to Data Sheet J-JD-K-00048 and drawing J-J8-K-00048.

3.3.1.5 Four Gamma Holdup Monitors, GFDS-RE/RT-001 through 004, are installed in the Green Fuel Glovebox. Refer to Data Sheet J-JD-K-00163 and drawing J-J8-K-00048.

3.4 Electrical

3.4.1 The GFDS System will contain the following electrical components and services. The major electrical components will be provided as Engineered Equipment. This Scope of Work includes all raceway, power, control cables/terminations between field equipment and local controls. Provide onsite setup and assembly of the referenced Engineered Equipment. Approximately 6 Glovebox Feed-thru Penetrations Connector Assemblies are required for service to electrical and I&C components/equipment located within the glovebox.

3.4.1.1. Electrical power distribution will be as shown on single line drawings E-E2-K-02232. The following two power panels will be located in the GFDS general area (refer drawing SK-DE-GFDS-0003) to feed the Electrical, I & C and Mechanical loads.

1. 480 Volts, 3 phase, 4 wire, Green Fuel Power Panel ELNH-PNL-001

2. 208/120 Volts, 100 A, Green Fuel Power Panel ELNH-PNL-012

3.4.1.2 Work Scope includes installation of new grounding pigtails (approx. 10 ft. long with bolted connections) between new permanent electrical equipment and/or skids to the existing ground grid system. Small movable equipment will be grounded in accordance with code and or industry practices.

3.4.1.3 Provide and install Junction boxes, pull boxes, cables, conduits.

3.4.1.4 Refer to Attachment 3, Bulk Electrical Materials for cable and conduit descriptions and quantities. Unless otherwise stated, it is the responsibility of the installer to provide these commodities.

3.5 Plant Design

3.5.1 No piping is associated with this Scope of Work.

3.6 Civil/Structural/Architectural

3.6.1 The C/S/A scope of work required for installation of supports for the major components of Green Fuel Disassembly System is as follows.

3.6.2 Glovebox
The size of the Glovebox is approximately 16'x 4' x 7' high and weighs approximately 36100 lbs. It is supplied with 10 legs with a 6"x6" plate at the bottom. Each leg will be welded to a base plate 12"x12"x ¾" thick and anchored with ¾" diameter bolts to the concrete slab. Follow the manufacturer's recommendations for the support details.

3.6.3 Air Hood
The size of the Air Hood is approximately 25' x 4' x 7' high and weighs approximately 26700 lbs. It is supplied with a mounting frame. It will be anchored with ½" diameter bolts to the concrete slab. Follow the manufacturer's recommendations for the support details.

3.6.4 HUFP Handler
The size of the HUFP Handler is approximately 7' x 8' x 19' high and weighs approximately 13300 lbs. It is supplied with a mounting frame. It will be anchored with ¾" diameter bolts to the concrete slab. Follow the manufacturer's recommendations for the support details.

3.6.5 DFA Handler
The size of the DFA Handler is approximately 2' x 2' x 14' high with the capacity to handle one DFA weighing approximately 400 lbs. It is supplied with a mounting frame. It will be anchored with ½" diameter bolts to the concrete slab. Follow the manufacturer's recommendations for the support details.

3.6.6 Crane
The frame of structural steel beams and columns will be erected to support the crane. The columns will be welded to 15" x 15" x 1" thick base plates with 1"diameter bolts anchored to the concrete ceiling. Follow the manufacturer's recommendations for the support details for the Crane.

3.6.7 Storage Rack
The size of the Storage Platform with Bottom Rack is 25' x 13' x 10' high. The weight is approximately 20,000 lbs. based on Richardson's platform guide of 30 lbs/SF of surface area adjusted by factor of 2 to account for increased member size and height above floor.

3.6.8 Platform for HUFP
The size of the HUFP Platform is 30' x 13' x 25' high. The weight is approximately 30,000 lbs. based on Richardson's platform guide of 30 lbs/SF of surface area adjusted by factor of 3 to account for increased member size and height above floor.

4.0 ASSUMPTIONS

4.1 General Assumptions

4.1.1 The Construction Agency will be the SRS Construction Group. DS will provide engineering documentation for the installation of this equipment and will rely on the use of SRS Guides and Standards.

4.1.2 SRS Construction Group will procure all bulk materials.

4.1.3 SRS Construction Group will procure all off-the-shelf components and equipment identified on engineering data sheets that do not require testing or quality documentation.

4.2 Specific Assumptions

4.2.1 Instrumentation and Controls

4.2.1.1 Construction scope includes initial calibration of instruments installed per this SOW.

4.2.2 Electrical

4.2.2.1 Assume that all permanently installed cabling will be routed in protected conduit/tray.

4.2.2.2 Cables installed within Glove boxes will be routed within designated tray, located within GB and/or supported from structural members within GB utilizing cable tie wraps

4.2.2.3 Existing grounding grid is intact and adequate for grounding of new equipment.

4.2.2.4 Pull/junction boxes will be required at 100 ft. run minimum intervals. Assume box size to be 18” X18” X 6”.

4.2.2.5 Engineered Equipment will include all hardware and cabling necessary for on site assembly. Terminations will utilize vendor assembled connectors or detailed wiring/connection drawings will be provided.

4.2.3 Plant Design

4.2.3.1 No specific assumptions have been made in this group.

4.2.4 Civil/Structural/Architectural

4.2.4.1 Core drills will be required for routing commodities through existing walls or floors, which is covered in C-SOW-K-00009.

4.2.4.2 Assume all anchor bolts used for equipment and commodity supports will be A36 Drillco Maxi bolts. Alternatively, Hilti Kwik Bolts -TZ are acceptable for anchoring items.

4.2.4.3 Any components inside any equipment like the Glovebox, Air Hood etc. are the integral parts of that equipment as one unit.

4.2.4.4 Functional Classification for drilling holes in concrete surface is SC.

4.3 High Business Decision Estimate Range (BDER)

4.3.1 HUFP requalification for drop testing.

4.4 Maintenance Strategy

4.4.1 Maintenance and replacement of Green Fuel equipment will be manual/hands on. If any Green Fuel equipment fails during operation it will be manually removed and replaced (Refer to M-ESR-K-00017).

5.0 TECHNOLOGY DEVELOPMENT ISSUES

There are no technology development issues associated with the Green Fuel Disassembly System.

6.0 REFERENCES

6.1 Drawing List

6.1.1 PUD Project Drawings & Sketches

6.1.1.1 E-E2-K-02232 – Plutonium Disposition Project Motor Control Center ELNH-MCC-11M

6.1.1.2 J-J8-K-00048 – Green Fuel MC & A Control Block Diagram

6.1.1.3 J-JD-K-00046 – Green Fuel Disassembly Gamma Isotopic System Data Sheet

6.1.1.4 J-JD-K-00047 – Green Fuel Disassembly Pin Fuel Can Weigh Scale Data Sheet

6.1.1.5 J-JD-K-00048 – Green Fuel Disassembly APNMC Data Sheet

6.1.1.6 J-JD-K-00163 – Green Fuel Holdup Monitors

6.1.1.7 M-DS-K-00112 – Green Fuel Disassembly Overhead Bridge Crane Data Sheet

6.1.1.8 M-DS-K-00113 – Green Fuel Disassembly DFA Handler Data Sheet

6.1.1.9 M-DS-K-00117 – Green Fuel Disassembly Band Saw Data Sheet

6.1.1.10 M-DS-K-00118 – Green Fuel Disassembly Rotary Saw Data Sheet

6.1.1.11 M-DS-K-00119 – Green Fuel Disassembly Winch Data Sheet

6.1.1.12 M-M5-K-01968 – Green Fuel Disassembly System Glovebox Airflow Diagram

6.1.1.13 M-M8-K-00019 – Plutonium Disposition Facility Green Fuel Disassembly Material Handling Block Flow Diagram

6.1.1.14 M-SPP-K-00059 – Procurement Specification- Plutonium Disposition Gloveboxes

6.1.1.15 SK-DE-GFDS-0001 – Plutonium disposition Project Green Fuel Disassembly Glovebox and Air Hood Layout

6.1.1.16 SK-DE-GFDS-0002 – Green Fuel System Pin Fuel Can

6.1.1.17 SK-DE-GFDS-0003 – Plutonium Disposition Project Green Fuel Disassembly Area Facility Layout -40 Level

6.1.1.18 SK-DE-GFDS-0004 – Plutonium Disposition Project Green Fuel Storage Rack Plan, Sections, and Details

6.2 Design Input Documents

The following Facility Design Description and System Design Descriptions are the baseline documents used to develop this SOW.

6.2.1 Facility Design Description

6.2.1.1 G-FDD-K-00001, Rev. C, “PUV Facility Design Description”

6.2.2 System Design Description

6.2.2.1 X-SYD-K-00002, Rev. C, “Green Fuel Disassembly System (GFDS) SDD”

6.2.3 Safeguards and Security Requirements Identification document

6.2.3.1 S-SRI-K-00005, KAC Safeguards and Security Requirements Identification Document for Plutonium Disposition.

6.3 Applicable SRS & Industry Codes, Guides and Standards

6.3.1 Industry Codes and Standards

6.3.1.1 NFPA – 70, 2005 Edition, National Electrical Code.

6.3.2 SRS Guides & Standards

6.3.2.1 WSRC-IM-95-58, Standard 03252-G, Rev: 1, Installation and Testing of Concrete Anchors, December 19, 2005

6.3.2.2 WSRC-IM-95-58, Standard 15980-G, Rev: 3, Installation and Calibration of Instruments, July 16, 2004

6.3.2.3 WSRC-IM-95-58, Standard 16051-G, Rev: 2, Installation of Electrical Raceway Systems and Cable Trays, April 24, 2003

6.3.2.4 WSRC-IM-95-58, Standard 16052-G, Rev: 3, Installation of Electrical Wires, Cables and Terminations, August 15, 2005

6.3.2.5 WSRC-IM-95-58, Standard 16053-G, Rev: 2, Installation of Electrical Equipment, February 12, 2004

6.3.2.6 WSRC-IM-95-58, Standard 16056-G, Rev: 2, Installation of Grounding Systems, August 19, 2003

6.3.2.7 WSRC-TM-95-1, Standard 03010, Rev: 1, Coring, Chipping, and Drilling in Concrete, December 19, 2005

6.3.3 DOE Orders & Standards

6.3.3.1 DOE Manual 470.4-6, Rev: Chg.1, Nuclear Materials Control and Accountability, August 14, 2006

6.4 Related Scopes of Work (SOW)

6.4.1 M-SOW-K-00013, Feed Preparation System – This related SOW provides information on the Feed Preparation System. The Feed Preparation System receives 3013's and Pin Fuel Cans and prepares the contents for Oxidation.

6.4.2 E-SOW-K-00017, Electrical Power Supply System – This related SOW provides information on the electrical power supply for all systems. Electrical power is supplied to main electrical distribution equipment, which is utilized to service process and BOP equipment electrical needs.

6.4.3 C-SOW-K-00009, Scope of Work for Structural & Architectural Modifications for the K-Area Complex.

6.4.4 J-SOW-K-00002, Integrated Control System – This related SOW provides the interface to (automated) process control systems and/or MC&A network equipment included associated with this work scope.

6.4.5 M-SOW-K-00027, Material Handling System – This related SOW provides details on how material is transported between systems.

6.4.6 S-SOW-K-00002, Safeguards and Securities – This related SOW provides details on safeguard and security measures being implemented for each of the systems.

6.5 Miscellaneous

6.5.1 C-CI-G-0039, Rev: 0, Electrical Conduit and Equipment Supports, February 9, 2005.

6.5.2 WSRC-TR-06-0043, Rev: 0, Plutonium Vitrification Facility Consolidated Hazard Analysis, January 2007.

7.0 ATTACHMENTS

Attachment 1 – Bulk Electrical Materials

Attachment 2 – Bulk C/S/A Materials

Attachment 1 – Bulk Electrical Materials

Scope Set: Green Fuel Disassembly System **Date:** 4/5/2007

Prepared By: G.S. Rao **Reviewed By:** Rod King

Exterior Glovebox Cables

Sum of Qty XGB (ft)	
Ext. Cable Size/Type	Total
Cat 5E (4 PR#24)	100
3/C #12	715
USB Cable	220
2/C #16	480
2/0 Gnd	200
12/C Cable w/connectors at both ends Vendor Cable	100
1 PR # 16 SH	480
Grand Total	2,295

Interior Glovebox Cables

Sum of Qty NGB (ft)	
GB Cable Size/Type	Total
3/C #12	120
Cat 5E (4 PR#24)	20
Grand Total	140

All Raceway Types

Sum of Qty Rcwy (ft)	
RCWY	Total
3/4" IMC	695
1-1/2" IMC	60
1" IMC	800
Grand Total	1555

All Raceway Types Grouped by Red Designation

Sum of Qty Rcwy (ft)		
Red	RCWY	Total
N	3/4" IMC	495
	1" IMC	800
Y	3/4" IMC	200
	1-1/2" IMC	60
Grand Total		1,555

NOTE: Red designated raceways are associated with (classified) protected transmission system. Installation and (independent) inspection of these components and their associated wiring shall be per Project

Attachment 1 – Continued

	Description:	Green Fuel Disassembly System Bulk Materials, Cable and Conduit											
	Reference:	E-E2-K-02232 (MCC-11M), J-J8-K-00048, M-DS-K-00117, M-DS-K-00118, J-DS-K-0011											
		All Conduits are IMC (Intermediate Metallic Conduit) type											
				Cable Estimates (Exterior GB)		GB Pentr	(Interior. GB)	Shared Rcwy/Tray	Raceway Estimates				
Item #	From Equipment	To Equipment	XGB Length (A) (ft)	Qty (A)	Cable size/type	Conn. (Qty)	Length (B) (ft)	Length (C) (ft)	Length (D) (ft)	Qty (D)	Size/Desc. (D)	Red	Notes/Comments
1	GFDS Power Panel ELLV-PNL-012	GIS Computer Rack GFDS-GRIS-001A	75	1	3/C #12				55	1	3/4" IMC	N	Ref: E-E2-K-02232 J-J8-K-00048
2	GFDS Power Panel ELLV-PNL-012	Pin Fuel Can Weigh Scale GFDS-SCL-001	110	1	3/C #12	1	20		70	1	3/4" IMC	N	Ref: E-E2-K-02232 J-J8-K-00048
3	GFDS Power Panel ELLV-PNL-012	APNMC - Computer Rack GFDS-NCC-001A	50	1	3/C #12				30	1	3/4" IMC	N	Ref: E-E2-K-02232 J-J8-K-00048
4	GFDS Power Panel ELLV-PNL-012	Greeen Fuel Disassembly Winch GFDS-HOI-001	150	1	3/C #12	1	40		90	1	3/4" IMC	N	Ref: E-E2-K-02232 J-DS-K-00119
5	GFDS Power Panel ELLV-PNL-012	Abrasive Rotary Saw GFDS-SAW-002	110	1	3/C #12	1	20		70	1	3/4" IMC	N	Ref: E-E2-K-02232 M-DS-K-00118
6	GFDS Power Panel ELLV-PNL-012	Abrasive Rotary Saw GFDS-SAW-003	110	1	3/C #12	1	20		70	1	3/4" IMC	N	Ref: E-E2-K-02232 M-DS-K-00118
7	GFDS Power Panel ELLV-PNL-012	Band Saw GFDS-SAW-001	110	1	3/C #12	1	20		70	1	3/4" IMC	N	Ref: E-E2-K-02232 M-DS-K-00117
8	GIS - Computer Rack GFDS-GRIS-001A	Gamma Isotopic System GFDS-GRIS-001	55	1	12/C Cable w/connectors at both ends Vendor Cable				35	1	1-1/2" IMC	Y	Ref: E-E2-K-02232 J-J8-K-00048 Vendor cable size is assumed
9	APNMC - Electronics Rack GFDS-NCC-001A	Active/Passive Neutron Multiplicity Counter GFDS-NCC-001	45	1	12/C Cable w/connectors at both ends Vendor Cable				25	1	1-1/2" IMC	Y	Ref: E-E2-K-02232 J-J8-K-00048 Vendor cable size is assumed
10	MCA-CAB-004	Pin Fuel Can Weigh Scale GFDS-SCL-001	100	1	Cat 5E (4 PR#24)	1	20		60	1	3/4" IMC	Y	Ref: E-E2-K-02232 J-J8-K-00048
11	MCA-CAB-004	Gamma Holdup Monitors GFDS-RT/RE-001 thru 004	55	4	USB Cable				35	4	3/4" IMC	Y	Ref: E-E2-K-02232 J-J8-K-00048
12	Green Fuel Glove Box	Green Fuel I/O Cabinet ICS-CAB-090	120	4	1 PR # 16 SH				100	4	1" IMC	N	Ref: E-E2-K-02232 J-J8-K-00048
13	Green Fuel Glove Box	Green Fuel I/O Cabinet ICS-CAB-090	120	4	2/C #16				100	4	1" IMC	N	Ref: E-E2-K-02232 J-J8-K-00048
14	GFDS Power Panel ELLV-PNL-012	GIS Mechanical Cooler GFDS-CHU-001	60		3/C #12				40	1	3/4" IMC	N	Ref: E-E2-K-02232 J-J8-K-00048
15	Equipment	Ground Grid	200	1	2/0 Gnd								
16	TOTAL NO. OF GB PENETRATIONS					6							

Attachment 2 – Bulk C/S/A Materials

Plates	12” x 12” x ¾” thick	10 Ea.
Plates	15” x 15” x 1” thick	28 Ea. (For Crane)
Anchor Bolts	½” Diameter	60 Ea.
Anchor Bolts	¾” Diameter	66 Ea.
Anchor Bolts	1” Diameter	112 Ea. (For Crane)
Storage Rack	25’ x 13’ x 10’ high	20,000 lbs. of steel
HUFP Platform	30’ x 13’ x 25’ high	30,000 lbs. of steel
Steel Beams	W12 x 22	100 Ft. (For Crane)
Steel Columns	TS 8 x 8 x 0.5	60 Ft. (For Crane)

PLUTONIUM DISPOSITION PROJECT (U)

Project M09A

SCOPE OF WORK

M-SOW-K-00027 Revision 0

for

Material Handling System (U)

Originated by: _____ Date: 3/13/07
Suresh Soorma
Senior Mechanical Engineer

Reviewed by: _____ Date: 3/13/07
Edward Tefft
Senior Mechanical/Process Engineer

Approved by: _____ Date: 3-15-07
Clayton Holloway
Mechanical Lead

Approved by: _____ Date: 3/14/07
Roderick King
Electrical/I&C Lead

Approved by: _____ Date: 3/13/07
Ghada Elchoufi
C/S/A Lead

Approved by: _____ Date: 3-13-07
Drew Negus
Plant Design Lead

Approved by: _____ Date: 3-13-07
William Randall
Design Authority Engineer

Approved by: _____ Date: 3-13-07
John Hammond
Construction Lead

Approved by: _____ Date: 3/15/07
B.C. Patel
Project Engineer

UNCLASSIFIED
DOES NOT CONTAIN UNCLASSIFIED
CONTROLLED NUCLEAR INFORMATION
ADC/RO EC Tefft III
Date 3/13/07

Revision Page

Revision	Revision Date	Affected Section	Description of Change
0	3/15/2007	N/A	Initial Issue

Table of Contents

Section Page

1.0 SCOPE 4
1.1 General Description 4
1.2 Background 4
2.0 ACRONYMS/ABBREVIATIONS 5
3.0 DESCRIPTION OF PHYSICAL WORK 6
3.1 Performance Category and Functional Classification (PS, SS) 6
3.2 Mechanical/Nuclear/Process 6
3.3 Instrumentation and Controls 9
3.4 Electrical 10
3.5 Plant Design 11
3.6 Civil/Structural/Architectural 11
4.0 ASSUMPTIONS 12
4.1 General Assumptions 12
4.2 Specific Assumptions 13
5.0 TECHNOLOGY DEVELOPMENT ISSUES 13
6.0 REFERENCES 14
6.1 Drawing List 14
6.2 Design Input Documents 14
6.3 Applicable SRS & Industry Codes, Guides and Standards 14
6.4 Related Scopes of Work (SOW) 15
6.5 Miscellaneous 15
7.0 ATTACHMENTS 16
7.1 Attachment 1, Bulk Material Lists 16

1.0 SCOPE

1.1 General Description

This Scope of Work (SOW) Covers the Material Handling System (MH) for the Plutonium Disposition Project. The MH transports feed material (e.g., plutonium metal, plutonium oxide) and vitrified plutonium oxide product within and between various process modules (e.g., gloveboxes) and facilities including DWPF. In some cases, it also delivers empty containers back to the sending module for reuse. The MH utilizes various components such as automated transport carts (power pallets), manual and motorized shielded carts, dumbwaiters, helical lead screws (for vertical movement), elevators, dock lift, and transportation trailer. In addition, the material is transported in various containers such as 3013s, pin fuel cans, batch cans, transport cans, transport hoppers, vitrification cans, bagless cans, and canisters.

1.2 Background

The Office of Environmental Management has approximately 13 metric tons (MT) of plutonium in approximately 21 MT bulk materials without any defined disposition path. The Plutonium Disposition (PUD) Project is critical to meet the Department of Energy's strategic goal of providing a responsible resolution to the permanent disposal of the nation's excess high-level radioactive materials and waste; and to enable the cleanup of Environmental Management sites.

The Plutonium Disposition Facility (PDF) will be located at the K-Area Complex (KAC) to disposition up to approximately 13 Metric Tons (MT) of Environmental Management (EM) owned surplus plutonium. The facility will utilize a vitrification process to vitrify plutonium into a lanthanide borosilicate (LaBS) glass matrix. This glass will be packaged into bagless transfer cans and placed inside a Defense Waste Processing Facility (DWPF) type canister. The canister will be transported to DWPF and filled with High Level Waste (HLW) glass. The DWPF canisters will be stored in the Glass Waste Storage Buildings and later transported to the geologic repository at Yucca Mountain.

This Scope of Work (SOW) has been developed for the purpose of facilitating construction cost and schedule estimates for the Conceptual Design Report (CDR) on the PUD project. The input to this SOW was the approved technical baseline consisting of a Facility Design Description (FDD) and associated System Design Descriptions (SDD). Every intent has been made to assure alignment and consistency between this SOW and the appropriate sections of the technical baseline, in order to provide accurate estimates. This SOW is not a PUD technical baseline document. The SDD for the MH will be prepared during preliminary design phase of the project.

A HOLD is placed to identify information that is preliminary in nature, results from a design uncertainty, originates from insufficient documentation, needs verification, or identifies a discrepancy. A **TBD** is placed to identify places in the text where numeric values or descriptive information is not available at the time that the current revision of the SOW is released.

2.0 ACRONYMS/ABBREVIATIONS

2.1

Acronyms/Abbreviations	Definitions
CART	Automated Transport Cart
CAB	Cabinet
CNSL	Console
CDR	Conceptual Design Report
DOE	Department of Energy
DOT	Department of Transportation
DS	Design Services
DWPF	Defense Waste Processing Facility
FDD	Facility Design Description
GBS	Glovebox System
GS	General Services
HLW	High level Waste
HVAC	Heating, Ventilation and Air Conditioning
ICS	Integrated Control System
IRT	Infrared Transceiver
KAC	K-Area Complex
LaBS	Lanthanide Borosilicate
MC&A	Material Control and Accountability
MH	Material Handling
MT	Modification Traveler
NFPA	National Fire Protection Association System
OWS	Operator Workstation
PLC	Programmable Logic Controller
PDF	Plutonium Disposition Facility
PS	Production Support
PUD	Plutonium Disposition
PuVit	Plutonium Vitrification
RFID	Radio Frequency Identification
SC	Safety Class
SDD	System Design Description
SOW	Scope of Work
SRS	Savannah River Site
SS	Safety Significant
TBD	To Be Determined
TT	Transportation Trailer
TUNL	Transport Glovebox Tunnel
WSRC	Washington Savannah River Company

3.0 DESCRIPTION OF PHYSICAL WORK

3.1 Performance Category and Functional Classification (PS, SS)

3.1.1 Performance Category

3.1.1.1 The performance category for MH is PC-2 (Refer to G-FDD-K-00001).

3.1.2 Functional Classification

3.1.2.1 The systems in this SOW shall be designed in accordance with the requirements of WSRC Manual WSRC-E7, Conduct of Engineering and Technical Support Procedure 2.25 Rev 14, "Functional Classification". Functional Classification for various components of MH, per WSRC-TR-06-0043, is as follows:

A. Manual Shielded Cart (Each-1)
Functional Classification – Production Support (PS)

B. Motorized Shielded Cart (Each-1)
Functional Classification – Production Support (PS)

C. Dumbwaiters (Each-2)
Functional Classification - Production Support (PS)

D. Freight Elevator (Each-2)
Functional Classification - Production Support (PS)

E. Dock Lift (Each-1)
Functional Classification - Production Support (PS)

F. Motorized Power Pallet (Each -16; See section 3.2.7.1 for details)
Functional Classification- Production Support (PS)

G. Transportation Trailer (Each-1)
Functional Classification- Production Support (PS)

H. Material Handling Tunnel Sections
Functional Classification- Safety Significant (SS)

3.2 Mechanical/Nuclear/Process

3.2.1 Material Handling System Components

3.2.1.1 Refer to SK-DA-MH-0001for the Material Transport Strategy block flow diagram. The major components of the Material Handling system are as follows:

- Manual Shielded Cart
- Motorized Shielded Cart
- Dumbwaiters
- Freight Elevators
- Dock Lift
- Automated Transport Cart
- Transportation Trailer

3.2.2 Manual Shielded Cart

3.2.2.1 Provide a Manual Shielded Cart to transport two (2) 3013 cans from 00 level to the Feed Preparation and Oxidation gloveboxes on the -40 level. The outer lid of the cart shall be lockable. See Data Sheet M-DS-K-00102.

3.2.3 Motorized Shielded Cart

3.2.3.1 Provide a Motorized Shielded Cart as a walk behind pallet mover with a large shielded container mounted to the lifting forks. The shielded container will house a 4-pack basket containing 4 bagless cans for transfer to -40 to -20 and then to -14 levels. See Data Sheet M-DS-K-00102 and SK-DE-BTS-0004.

3.2.4 Dumbwaiters

3.2.4.1 Provide a Dumbwaiter capable of carrying two (3013s), mounted on Manual Shielded Cart, from 00 to -40 level. Assume a maximum cart weight of 250 lbs plus a load of 60 lbs. The dumbwaiter shall be lockable during operation. See Data Sheet M-DS-K-00103.

3.2.4.2 Provide a Dumbwaiter capable of carrying four (bagless cans), loaded in a basket type container, from -14 to 00 level. Assume a maximum cart weight of 160 lbs plus a load of 50 lbs. The dumbwaiter shall be lockable during operation. See Data Sheet M-DS-K-00103.

3.2.5 Freight Elevators

3.2.5.1 Provide a Freight Elevator (6000 lbs capacity) capable of transporting a Motorized Shielded Cart and an Operator from -40 to -20 levels. See Data Sheet M-DS-K-00104.

3.2.5.2 Provide a Freight Elevator (8000 lbs capacity) capable of transporting an Operator, equipment, supplies, etc. from -00 to -20 levels. See Data Sheet M-DS-K-00104.

3.2.6 Dock Lift

3.2.6.1 Provide a Dock Lift (8000 lbs capacity) capable of transporting a Motorized Shielded Cart and an Operator from -20 to -14 levels. See Data Sheet M-DS-K-00105.

3.2.7 Automated Transport Cart (Power Pallet)

3.2.7.1 Provide a total of (16) motorized power pallets (Ref. M-SPP-K-00059).

- Two (2) motorized pallets with permanently mounted transport hopper.
- Five (5) motorized power pallets with no hopper.
- Seven (7) motorized power pallets to recover any of the other power pallets that fail during operation.
- Two (2) spare motorized power pallets, one (1) with hopper and (1) with no hopper.

3.2.8 Transportation Trailer (TT)

3.2.8.1 Provide a transportation trailer to carry loaded Can-In-Canisters from PUV to DWPF and to transport empty canisters back to PUV on return trip.

3.2.8.2 The TT will be a modified commercially available low boy type. The TT will be moved by a commercially available truck.

3.2.8.3 The TT will carry loaded canisters in the vertical position.

3.2.8.4 The TT will be designed to carry a minimum of two loaded canisters at a time to DWPF.

3.2.8.5 To facilitate unloading in the exit tunnel of DWPF into wells or holes in the DWPF floor, the TT also must be designed to unload canisters by lowering them through a hole in the trailer floor as the ceiling height inside the exit tunnel will not allow for normal unloading from above.

3.2.8.6 The (Shielded Canister Transporter) SCT outriggers will be required for stabilizing the TT during loading and unloading operations.

3.2.8.7 The canisters will be top loaded into the TT. The KAC cranes will be utilized for loading the canister into the TT. The TT will be provided with shielded walls to house two loaded canisters and will include features to secure the canisters and minimize the possibility of credible accident during transport.

3.2.8.8 Provide an on-board jib crane over the rear wheels for removing a DWPF exit tunnel floor plug and support and lower the canisters and put the plug back into the hole.

3.2.8.9 The TT jib crane will be of 5 ton capacity and will be powered by the TT. The mast will be telescopic capable of varying the height from 10 ft to 20 ft. The beam of the crane will be able to rotate 360 degrees on the powered telescopic mast. The crane will have two types of grapples one for the plug and the other for the canister.

3.2.8.10 The rear wheels of the TT will be able to turn and maneuver its opening to center precisely over the plug opening in the slab to unload canisters and be able to put the plug back in the hole.

3.2.8.11 The TT will be provided with a target mechanism to ensure that the canister is properly aligned over the exit tunnel.

3.2.8.12 The following design data shall be used for the TT:

1. Wt. on TT = 25000 lbs. (Estimated) (Ref M-SYD-K-00002)
2. Wt. of loaded canister = 2000 lbs. (Estimated) (Ref M-SYD-K-00002)
3. Wt. of shielding = 10000 lbs. (Estimated) (Ref M-SYD-K-00002)
4. Canister size = 24" Dia. X 118" Long (Ref. M&O-PUD-2006-00072)
5. Overall Height from the floor < 12 Ft (Ref. M&O-PUD-2006-00072)
6. Wt. of grapple (Estimated) = 600 lbs.

3.2.8.13 See Sketch Number SK-DE-MH-0003 for more details.

3.2.9 Material Handling Tunnel Sections

3.2.9.1 Material Handling Tunnel sections shall be procured per Procurement Specification M-SPP-K-00059. For layout dimensions details see Data Sheet M-DS-K-00101.

3.3 Instrumentation and Controls

3.3.1 Material Handling System Automated Control Strategy

3.3.1.1 Operational control for the Material Handling System is shown on the Control Block Diagram, drawing J-J8-K-00037, sheet 3 of 10. Typical cart travel through each tunnel section is described on drawings J-J8-K-00037, sheets 6-10.
These drawings provide CART operational sequences and define any interface logic that may be applicable.

3.3.2 Automated Transport Carts

3.3.2.1 Automated Transport Carts (CART) are the product transport devices (Approx. 20" x 20"x6" H) which travel horizontally on the tunnel floor. These carts are battery-powered and contain a pre-programmed PLC to control their movement within the tunnels. Excluding spares, there are seven (7) main CART which serve the five (5) main tunnels and two branches in tunnels 3 and 4. These CART originate and return to each of the seven (7) tunnel maintenance sections.

3.3.3 Automated Tow Carts

3.3.3.1 Automated Tow Carts are more robust and are heavy duty versions of the Automated Transport Carts in Section 3.3.2.1.These carts are used for maintenance purposes, primarily for towing or pushing a disabled Automated Transport Cart which may have become immobile in the transport tunnel. These seven (7) CART are on a standby posture and are stored in each of seven (7) tunnel maintenance sections.

3.3.4 CART Battery Charging Systems

3.3.4.1 Each of the seven (7) tunnel maintenance sections contains a 24-48 vdc, at about 3 amps, CART battery charger which charges both the Automated Transport Cart and the Automated Tow Cart. Charger operating status and trouble alarms are transmitted from the charging stations to the MH Operator Workstation.

3.3.5 MH Line Controller

3.3.5.1 The Line Controller is a programmable logic controller (PLC) which contains all of the software programming for MH system operation. The MH Line Controller sends and receives information to and from the Infrared Communications Controller. The MH Line Controller receives and sends data to the transport cart elevators, Integrated Control System Interface Cabinet and the MH Operator's Workstation (OWS). The Integrated Control System serves as Supervisory Control over the Material Handling System and provides process-related communications to the MH System. The Integrated Control System also passes discrete data, such as interlocks and permissives, from the Material Control and Accountability (MC&A) System to the MH Line Controller. Neither the Integrated Control System, MH Operator Workstation nor the Material Control and Accountability System are within the scope of the Material Handling System supplier. (See drawing J-J8-K-00037, sheet 3 of 10).

3.3.6 MH Infrared Controller

3.3.6.1 The infrared controller sends and receives data from the MH Line Controller. The infrared controller converts commands and other data from the MH Line Controller to infrared signals for transmission to the Infrared Transceivers (IRTs). Each IRT operates on an independent frequency so that frequency interference is avoided.

3.3.6.2 Infrared signals received by the MH Infrared Controller from the IRT's are converted to serial data and passed to the MH Line Controller. (See drawing J-J8-K-00037, sheet 3 of 10).

3.3.7 Infrared Transceivers (IRTs)

3.3.7.1 These transceivers send and receive infrared line-of-sight signals to and from the Infrared Communications Controller. This communication link assists in commanding CART speed and direction. In addition, this communications link provides cart location information through the Infrared Communications Controller to feed the Material Handling System graphics panel located in the +15 elevation Control Room. (See drawing J-J8-K-00037, sheet 4 of 10 for IRT quantity and locations).

3.3.8 Radio Frequency Identification (RFID) Tags

3.3.8.1 The RFID tags are passive devices operating on low power radio frequencies. These tags provide location information through the IRT's back to the Infrared Communications Controller. (See drawing J-J8-K-00037, sheet 5 of 10 for RFID quantity and locations).

3.3.9 Transport Cart Elevator

3.3.9.1 The Transport Cart Elevators provide the vertical movement of the CART's when an elevation change in the tunnel is necessary. The CART location at the elevator is signaled back to the Infrared Communications Controller by an RFID. Vertical movements are programmed into the Infrared Communications Controller which ultimately provides elevator control. (See drawing J-J8-K-00037, sheet 2 of 10 for quantities and lift locations within the tunnels).

3.4 Electrical

3.4.1 Motorized Shielded Cart

3.4.1.1 Provide120 Volt power for an integral battery charger for the Motorized Shielded Cart. This battery charging location is to be located at Column BL/5 on -14 level south of the Bagless storage room. Electrical load for the cart charger is assumed to be 300 va. For cabling and raceway requirements see Attachment 1 page 2 and 3 of 3 for Material Handling Bulk Materials spreadsheet.

3.4.2 Dumbwaiters (00 to -40 levels)

3.4.2.1 Provide 480 Volt 3 phase power to the Dumbwaiter. Electrical load for the Dumbwaiter is assumed to be a 2 hp motor. Dumbwaiters will be locally controlled. For cabling and raceway requirements see Attachment 1 page 2 and 3 of 3 for Material Handling Bulk Materials spreadsheet.

3.4.3 Dumbwaiter (-14 to 00 levels)

3.4.3.1 Provide 480 Volt 3 phase power to the Dumbwaiter. Electrical load for the Dumbwaiter is assumed to be a 1 hp motor. Provide control cabling to the magazine loading control console PLC. For cabling and raceway requirements see Attachment 1 page 2 and 3 of 3 for Material Handling Bulk Materials spreadsheet.

3.4.4 Freight Elevators

3.4.4.1 Provide 480 Volt 3 phase power for the Freight Elevator. Electrical load for the Freight Elevator is assumed to be a 15 hp motor. For cabling and raceway requirements see Attachment 1 page 2 and 3 of 3 for Material Handling Bulk Materials spreadsheet.

3.4.5 Dock Lift

3.4.5.1 Provide 480 Volt 3 phase power to the dock lift. Electrical load for the dock lift is assumed to be a 5 hp motor. For cabling and raceway requirements see Attachment 1 page 2 and 3 of 3 for Material Handling Bulk Materials spreadsheet.

3.4.6 Tunnel Sections

3.4.6.1 Provide 120 Volt power for 7 (see section 3.3.4.1) battery chargers in tunnel maintenance sections. Electrical load for each charger is assumed to be 150 va. Provide 120 Volt power for 12 elevator lifts in vertical glove box sections. Electrical load for each lift is assumed to be a fractional horsepower motor. Provide control cabling for 12 elevator lifts and 7 battery chargers. Provide cabling from 21 infrared transceivers to the Feed Preparation/Oxidation control room on -40. Provide a fiber optic cable from the MC&A cabinet to the ICS cabinet in the -20 I/O room. Provide an RS232 data line from the feed prep control room to the +15 Control Room. In the +15 Control Room provide a 120 Volt power feed for the local operator panel. For cabling and raceway requirements see Attachment 1 page 2 and 3 of 3 for Material Handling Bulk Materials spreadsheet.

3.5 Plant Design

3.5.1 For layout details of Material Handling Tunnel sections see Sketch Numbers SK-DE-MH-0001 and SK-DE-MH-0002.

3.6 Civil/Structural/Architectural

3.6.3 Dumbwaiters

3.6.3.1 The size of dumbwaiter is 36" X 36" X 48 "with a capacity of 500 lbs. It carries the cart containing 2-3013 containers from 00 Level to -40 level. It will be housed in the newly constructed concrete walls and sheetrock walls from 00 Level to -40 level. The shaft will be made of reinforced concrete walls with necessary door openings. For more information see C-SOW-K-00009.

3.6.3.2 The size of dumbwaiter is 20" X 20" X 30 "with a capacity of 500 lbs. It carries the basket of 4 'Bagless cans' from -14 to 00 levels. It will be housed in the newly constructed concrete walls from 00 Level to -14 level. The shaft will be made of reinforced concrete walls with necessary door openings. For more information see C-SOW-K-00009.

3.6.4 Freight Elevators

3.6.4.1 There are two Freight Elevators. One capable of transporting a Motorized Shielded Cart and an Operator from -40 to -20 level and other will transport personals, tools, materials etc. from -00 to -20 level. The size of each elevator is 8'-4" X 12'-0". It will be housed and

supported on the newly constructed concrete shaft. The elevator shaft will be a structure made of reinforced concrete walls with necessary door openings. For more information see C-SOW-K-00009.

3.6.5 Dock Lift

3.6.5.1 The size of dock Lift is 6' X 10' with a capacity of 6200 lbs. It will transport the shielded cart and operator from -20 Level to -14 Level. It will be securely anchored on the concrete floor by ¾" diameter A-36 bolts at its parking location.

3.6.6 Tunnel Sections

3.6.6.1 A system of material handling tunnel sections is designed for transporting the material between various process glovebox modules. It will also be capable of recycling empty containers back to the sending modules for reuse. It will be routed to pass thru there three different areas:

- Oxidation/Feed Preparation: This section of tunnel will be supported on the structural steel hangers attached to the base plates (Size:12" X 12" X ¾" thick) and anchored with 3/4" diameter bolts to the existing concrete ceiling of -20 Level floor.

- Milling and Mixing: This section of tunnel will be supported on the structural steel hangers attached to the base plates (Size:12" X 12" X ¾" thick) and anchored with 3/4" diameter bolts to the existing concrete ceiling of -20 Level floor.

- Vitrification: This section of tunnel will be supported on the structural frame work, attached to the base plates (Size: 12" X 12" X ¾" thick) and anchored with 3/4" bolts to the existing concrete floor of -40 Level.

- Bagless Transfer: The section of tunnel will be supported on the structural hangers attached to the base plates (Size: 12" X 12" X ¾" thick) and anchored with 3/4" bolts to the existing concrete ceiling of -20 Level floor.

- Platforms constructed of steel structure with grating, railing etc. will be provided, as required, for the maintenance work at each transport tunnel including maintenance sections. The platforms will be standard steel framework with 3"-6" high pipe railing, 1"-6" steel ladder and steel grating. Platforms will be supported on TS 6x6x0.5 columns attached to the base plates 12"x12"x3/4" and anchored with ¾' dia. bolts to the existing -40 level concrete floor.

3.6.6.2 See Attachment 1 page 1 of 3 for C/S/A Bulk Material details.

4.0 ASSUMPTIONS

4.1 General Assumptions

4.1.1 The Construction Agency will be the SRS Construction Group. Design Services will provide engineering documentation for the installation of this equipment and will rely on the use of SRS Guides and Standards.

4.1.2 SRS Construction Group will procure all bulk materials.

4.1.3 SRS Construction Group will procure all off-the-shelf components and equipment identified on engineering data sheets that do not require testing or quality documentation.

4.2 Specific Assumptions

4.2.1 Mechanical

4.2.1.1 The crane in Green Fuel area will be covered in M-SOW-K-00026.

4.2.1.2 The crane in Bagless Transfer Storage area will be covered in M-SOW-K-00017.

4.2.1.3 The crane in Magazine Loading area will be covered in M-SOW-K-00017.

4.2.1.4 The crane in NDA room will be covered in M-SOW-K-00015.

4.2.1.5 The material handling tunnel sections will be maintained at a negative pressure with respect to the room where the gloveboxes are located.

4.2.2 Instrumentation and Controls

4.2.2.1 No specific assumptions have been made in this group.

4.2.3 Electrical

4.2.3.1 Approximately 47 (SS Functional Class) electrical feed through connector assemblies will be required for service to commodities located within tunnel sections.

4.2.4 Plant Design

4.2.4.1 No specific assumptions have been made in this group.

4.2.5 Civil/Structural/Architectural

4.2.5.1 Core drills will be required for routing electrical conduit through walls or floors. See C-SOW-K-00009 for more details.

4.2.5.2 All anchors bolts used for equipment and commodity supports will be A36 Drillco Maxi bolts.

4.2.5.3 Assume Functional Classification for drilling holes in concrete is SC.

4.2.5.4 For electrical conduits and equipment supports, use cookbook C-CI-G-0039.

4.2.5.5 Steel bar grating for the platforms will be commercially available standard item.

5.0 TECHNOLOGY DEVELOPMENT ISSUES

5.1 See sections 6.5.1 and 6.5.2 for details on selection of transport technology for the Material Handling system.

6.0 REFERENCES

6.1 Drawing List

6.1.1 PUD Project Drawings & Sketches

6.1.1.1 M-DS-K-00101, Rev A, Data Sheet for MH Tunnel Sections

6.1.1.2 M-DS-K-00102, Rev A, Data Sheet for Material Handling Carts

6.1.1.3 M-DS-K-00103, Rev A, Data Sheet for Dumbwaiters

6.1.1.4 M-DS-K-00104, Rev A, Data Sheet for Freight Elevators

6.1.1.5 M-DS-K-00105, Rev A, Data Sheet for Dock Lift

6.1.1.6 SK-DA-MH-0001, Rev B, Material Transport Strategy Block Flow Diagram

6.1.1.7 J-J8-K-00037, Rev B, Sheets 1 to 10, Automated Control System for Material Handling

6.1.1.8 SK-DE-MH-0001, Rev A, MH Tunnel Sections Layout

6.1.1.9 SK-DE-MH-0002, Rev A, MH Tunnel Sections Details

6.1.1.10 SK-DE-MH-0003, Rev A, Canister Transport Trailer

6.1.1.11 SK-DE-BTS-0004, Rev A, Bagless Transfer Motorized Shielded Cart Details

6.2 Design Input Documents

The following Facility Design Description and System Design Descriptions are the baseline documents used to develop this SOW.

6.2.1 Facility Design Description

6.2.1.1 G-FDD-K-00001, Rev B "PUV Facility Design Description"

6.2.2 System Design Description

6.2.2.1 M-SYD-K-00002, Rev B, Can-In-Canister Loading, Storage and Transport (For Transport Trailer Only).

6.2.3 Safeguards and Security Requirements Identification Document

6.2.3.1 S-SRI-K-00005, KAC Safeguards and Security Requirements Identification Document for Plutonium Disposition

6.3 Applicable SRS & Industry Codes, Guides and Standards

6.3.1 Industry Codes and Standards

6.3.1.1 NFPA 70, National Electric Code

6.3.1.2 NFPA 101, Life Safety Code, August 18, 2005.

6.3.1.3 ANSI/ITSDF B56.1, Safety Standard for Low and High Lift Trucks, 2005.

6.3.1.4 ANS/UL 583, Rev: 9th Edition, UL Standard for Safety of Electric Battery Operated Industrial Trucks, January 31, 2006.

6.3.2 SRS Guides & Standards

6.3.2.1 WSRC-TM-95-1, Standard 03010, Rev 1: Coring, Chipping, and Drilling in Concrete.

6.3.2.2 WSRC-TM-95-1, Standard 05057, Rev 1: Control of Welding.

6.3.2.3 WSRC-IM-95-98, Guide 03251-G, Rev 1: Concrete Anchors.

6.3.2.4 WSRC-IM-95-98, Guide 03252-G, Rev1: Installation and Testing of Anchors.

6.3.2.5 WSRC-IM-95-98, Guide 16051-G, Rev 2: Installation of Electrical Raceway Systems and Cable Trays.

6.3.2.6 WSRC-IM-95-98, Guide 16052-G, Rev 3: Installation of Electrical Wires, Cables, and Terminations.

6.3.2.7 WSRC-IM-95-98, Guide 16053-G, Rev 2: Installation of Electrical Equipment.

6.3.2.8 WSRC-IM-95-98, Guide 16056-G, Rev 2: Installation of Grounding Systems.

6.4 Related Scopes of Work (SOW)

6.4.1 C-SOW-K-00009, Structural and Architectural Modifications for Process Building.

6.4.2 E-SOW-K-00017, Electric Power Supply System

6.4.3 F-SOW-K-00001, Scope of Work for Fire Protection System

6.4.4 J-SOW-K-00002, Scope of Work for Integrated Control System

6.4.5 M-SOW-K-00011, Scope of Work for Vitrification

6.4.6 M-SOW-K-00013, Scope of Work for Feed Preparation

6.4.7 M-SOW-K-00014, Scope of Work for Milling and Mixing

6.4.8 M-SOW-K-00015, Scope of Work for Bagless Transfer and NDA

6.4.9 M-SOW-K-00019, Scope of Work for Metal Oxidation

6.4.10 M-SOW-K-00024, Scope of Work for Dustless Transfer System

6.4.11 S-SOW-K-00002, Scope of Work for Safeguards and Security

6.5 Miscellaneous

6.5.1 M-ESR-K-00012, Facility Material Transport System Strategy Report.

6.5.2 M-ESR-K-00018, Facility Material Transport System Alternate Study.

6.5.3 M-SPP-K-00059, Procurement Specification for Plutonium Disposition

Gloveboxes.

6.5.4 WSRC TR-06-0043, Rev 0: Plutonium Vitrification Facility Consolidated Hazard Analysis, January 2007.

6.5.5 C-CI-G-0039, Rev 0: Electrical Conduit and Equipment Supports, February 9, 2005.

7.0 ATTACHMENTS

7.1 Attachment 1, Bulk Material Lists

Attachment 1
Page 1 of 3

Bulk Material List for C/S/A

Item No.	Description of Item	Size	Platforms	Oxidation/Feed Prep./Milling & Mixing	Vitrification	Bagless Transfer	Total Quantity
1	Base Plates	12"x12"x ¾" Thick	24	62	32	26	**144 Ea.**
2	A-36 maxi Bolts	¾" Dia.	96	248	128	104	**576 Ea.**
3	Tube Steel	TS 4x4x0.5	_	1000'	600'	400'	**2000 LF**
4	Tube Steel	TS 6x6x0.5	220LF	_	_	_	**220 LF**
5	Steel Ladder	1'-6" Wide	55 LF (Ref C-C1-G-0103)	_	_	_	**55 LF**
6	Pipe Railing	3'-6" High	198 LF (Ref C-C1-G-0101)	_	_	_	**198 LF**
7	Steel Angle	L 6x6x½	198 LF	_	_	_	**198 LF**
8	Steel Channel	C 5x9	136 LF	_	_	_	**136 LF**
9	Galv. Grating	1"x3/16"	385 Ft^2	_	_	_	**385 Ft^2**

All the structural steel members will be welded connections.

Prepared By: Eddie Taylor
(Eddie Taylor)

Reviewed By: RK 3-14-07
(Rod King)

Exterior Glovebox Cables

Sum of Qty XGB (ft)	
Ext. Cable Size/Type	Total
3/C#10 w/1-#12gnd	520
4/C #12	1,480
4/C#12	530
Fiber optic cable-6 conductor	130
1 PR#18 TWSH	5,295
16c #16	640
6/C #18	4,780
Grand Total	13,375

Interior Glovebox Cables

Sum of Qty NGB (ft)	
GB Cable Size/Type	Total
4/C #12	70
6/C #18	190
Grand Total	260

All Raceway Types

Sum of Qty Rcwy (ft)	
RCWY	Total
3/4" IMC	1,850
1 1/2" IMC	120
1 1/2"IMC	175
Grand Total	2,145

All Raceway Types Grouped by Red Designation

Sum of Qty Rcwy (ft)		
Red	RCWY	Total
N	3/4" IMC	1,850
	1 1/2" IMC	120
	1 1/2"IMC	175
Grand Total		2,145

Description: Facility Material Handling System Bulk Materials, Cable and Conduit
Reference: J-J8-K-00037, M-ESR-K-00012

			Cable Estimates (Exterior GB)			GB Pentr	(Interior. GB)	Shared Rcwy/Tray	Raceway Estimates				
Item #	From Equipment	To Equipment	Length (A) (ft)	Qty (A)	Cable size/type	Conn. (Qty)	Length (B) (ft)	Length (C) (ft)	Length (D) (ft)	Qty (D)	Size/Desc. (D)	Red	Notes/Comments
1	ELLV-PNL-005	Charger for motorized cart	260	1	4/C#12	0	0	0	250	1	3/4" IMC		Charging station is located on -14 Col BL/5 south of bagless storage
2	MCC-22E	Dumbwaiter (-40 to 00)	160	1	4/C#12	0	0	0	150	1	3/4" IMC		Controls will be vendor supplied/installed
3	MCC-31E	Dumbwaiter (-14 to 00)	110	1	4/C#12	0	0	0	100	1	3/4" IMC		
4	MCC-18M	Freight Elevator (-20 to -40)	260	1	3/C#10 w/1-#12gnd	0	0	0	250	1	3/4" IMC		Controls will be vendor supplied/installed
5	MCC-22E	Material lift platform (-20 to -14)	260	1	3/C#10 w/1-#12gnd	0	0	0	250	1	3/4" IMC		Controls will be vendor supplied/installed
6	Local Pnl	Glove box elevators	260	1	4/C #12	0	0	200	50	1	3/4" IMC		power ckt for 4 elevators
7	Local Pnl	Glove box elevators	260	1	4/C #12	0	0	200	50	1	3/4" IMC		power ckt for 4 elevators
8	Local Pnl	Glove box elevators	260	1	4/C #12	0	0	200	50	1	3/4" IMC		power ckt for 4 elevators
9	Feed Prep/Oxidation Cntrl Room	Glove box elevators	270	12	6/C #18	12	10	200	50	1	3/4" IMC		control ckt for elevators
10	Feed Prep/Oxidation Cntrl Room	Tunnel cart chargers	250	1	4/C #12	4	40	150	50	1	3/4" IMC		power ckt for 4 chargers
11	Feed Prep/Oxidation Cntrl Room	Tunnel cart chargers	240	1	4/C #12	3	30	150	50	1	3/4" IMC		power ckt for 3 chargers
12	Feed Prep/Oxidation Cntrl Room	Tunnel cart chargers	220	7	6/C #18	7	10	150	50	1	3/4" IMC		control ckt for chargers
13	(+15) Control Room	Feed Prep/Oxidation Cntrl Room	360	1	1 PR#18 TWSH	0	0	50	300	1	3/4" IMC		RS 232 Data Line
14	Local Pnl	(+15) Operator Control Station	210	1	4/C #12	0	0	0	200	1	3/4/" IMC		power ckt for local operator panel
15	Feed Prep/Oxidation Cntrl Room	Transport tunnel transceivers	235	21	1 PR#18 TWSH	21	0	200	25	1	3/4" IMC		21 Transceiver ckts.
16	Magazine loading control console	Dumbwaiter (-14 to 00)	160	4	16c #16	0	0	0	150	1	1 1/2"IMC		Dumbwaiter remote controls
17	MC & A	ICS (-20)	130	1	Fiber optic cable-6 conductor	0	0	0	120	1	1 1/2" IMC		
18													
19													
20					Total penetrations	47							

Preliminary Assumption List

for

Plutonium Vitrification Time and Motion Study

iGrafx™ Model

Document No. M&O-PUD-2006-00061
Revision 1

Washington Savannah River Company
Savannah River Site
Aiken, South Carolina 29808

APPROVAL PAGE

Prepared by: _____ _____
K. Dara B. Dixon Date
Systems Engineering

Approved by:_____ _____
David P. Eisele Date
Design Authority Lead

Approved by:_____ _____
Robert H. Smith Date
Design Authority

Approved by:_____ _____
P.K. Hightower Date
NMM Operations

Table of Contents

APPROVAL PAGE 2
APPENDIX A – 3
Pu Vit iGraphix® Model Major Assumptions and Material Transfer Assumptions 3
APPENDIX B - 3
Material Receipt and Storage System Assumptions 3
APPENDIX C - 3
Green Fuel Disassembly System Assumptions 3
APPENDIX D - 3
Oxidation System Assumptions 3
APPENDIX E - 3
Feed Preparation System Assumptions 3
APPENDIX F - 3
Milling and Mixing System Assumptions 3
APPENDIX G - 3
Vitrification System Assumptions 3
APPENDIX H - 3
Bagless Transfer System Assumptions 3
APPENDIX I - 3
Magazine Loading and Storage System Assumptions 3
APPENDIX J - 3
Canister Loading System Assumptions 3
APPENDIX K - 3
Canister Transport System Assumptions 3
APPENDIX L - 3
Waste Management Assumptions 3
APPENDIX M - 3
Labor and Equipment Assumptions 3

APPENDIX A –

Pu Vit iGraphix® Model Major Assumptions and Material Transfer Assumptions

Table A0. General Assumptions

Category	Assumption Description	Note	Owner	Source Document
Pu Vit Facility Operation life	4th quarter FY2013 - end FY2019 (7/1/2013 - 9/30/2019)			
Pu Vit Facility Operation life	Operations 24 hours/day, 7 days/week			PUV FDD Draft A, G-FDD-K-00001
Pu Vit Facility Feed	6911 3013's will be processed (5911 3013's and 1000 3013 equivalents from Green Fuel)			Y-ADS-G-00002
Feed Selection	All 3013 selection will be done in such a way as to have optimal Pu loading in the Pu Vit system. Out of 5 cans being processed each day: 1 can is Green fuel 1 can is metal (DMO) 3 cans are oxide Each day, assume 4 3013 are sent from vault to oxid/feed prep and 1 3013 is sent to feed prep from GFDS. Of the 4 3013, 1 is metal and three are oxides.	The Green fuel can will not be a 3013 container. It will not be welded or comply with DOE 3013 requirements.	B. Smith	
Can handling	Only one can is handled at a time or in transport at a time, in each gloveboxes.		Bob Smith	
Convenience Cans for 3013 with Oxide	Assume all 3013 with oxide have convenience cans.		Bob Smith	
MBA's	Assume that Pu Vit Facility is one MBA.		B. Randall	
Attritor Hold-up Event	An alarm will go off once every 2 years for Attritor hold-up. There will be stop work for 2 weeks for both Attritors.		D. Fisher	
Spilling between FP and Mix/Mill	Assume no spilling between Feed Prep and Mix/Mill		D. Fisher	

Category	Assumption Description	Note	Owner	Source Document
Calorimetry	The logic flow for all calorimetry is as follows: - On a single calorimeter a Empty Baseline runs is done first, 8 hours; assume this baseline can not fail. The baseline is done every 6th measurement. - Every 6th measurement, the calorimeter has a standard run, 8 hrs; assume failure 1% of the time. When failure occurs the standard is repeated, 8 hrs. The repeated standard is assumed not to fail. - Then the calorimeter performs a measurement, taking 8 hrs. - Assume it takes 35 min to load and 30 min to unload the calorimeter. There are 2 Ops for loading and unloading. - Assume there are enough standards to support the calorimeter needs for processing.		L. Baker B. Smith	5 measuremt limit is based on Manual 14Q, Procedure 3.06.
Bar Code Reading	Assume that given durations for functions include required bar code reading.			
GIC/GIS/GRIS	All of these acronyms refer to a Gamma Ray Isotopic System and are interchangeable (Gamma Isotopic Counter) (Gamma Isotopic System).		E. Schneier	
Equipment Availability/Planned Facility Outage	Availability for all equipment is assumed to be 100%. This is taking into account that planned maintenance will be performed during planned facility outages every 6 months for a one month duration. Availability due to unplanned outages can be seen in Appendix M.		B. Smith	
Facility Outage for accountability period	The facility will be down every two months for 1 week for accountability. This time period could include minor fixes on equipment.			
Security Related Outages	Assume no interruptions to facility operations due to potential security related outages.	Per Dave Adkins, Pu Vit will have monthly emergency preparedness drills lasting 2-3 hours, security drills on the backshift which occur twice a year (with the possibility of going to quarterly) that last 4-6 hours, and also infrequent material moves when only HRP folks are allowed to remain. These represent a number of drills and scenarios that can impact operations. Per Dave, there could be work arounds and/or scheduling that would limit any negative impacts.	D. Adkins	
Receive, Inspect and Store Material	- Assume that take 9975's out once a day. - Assume 30% of 3013's contain metal - Assume 70% of 3013' contain oxide - Assume that 3013 are retrieved from vault 1 time per day on night shift (two separate retrievals of 2 3013s each, but completed consecutively are preferred. However, if there is another 3013 out of the vault already, then retrieve 1 3013 at a time from the vault). - Material receipt storage vault capacity = 1,000 containers - Based on CSSC safety basis, two bare 3013's can be out of the		L. Milton B. Smith	

Category	Assumption Description	Note	Owner	Source Document
	vault in this area at a time. -Assume 100% accountability and weight measurements complete in CSSC			
GFDS	- One CCC is emptied before another one is opened - Assume no lag storage for Green fuel. Pin fuel cans will be transferred to Feed Prep as they are filled with one 3013 equivalent. - For both Ident and DFA, 17 pins per pin fuel can for a 3013 equivalent. There are 217 fuel pins in a DFA. - Assume random selection for DFA or Ident. - Assume process occurs in vault type room. - Assume operators performing work are also considered material surveillance. - Assume random selection of Ident Version (A, B, C, D). - There are 7 DFA's in each CCC. - There are 56 DFA's. - There are 21 Ident (6A, 5B, 6C, and 4D) - Assume that 13 HUFP/CCC's are available for processing at beginning of simulation. 9 HUFP's contain DFA's and 4 HUFP's contain Ident-69.		K. Oldfield	
Oxidation	-Assume that for modeling purposes if Transport Cans are recycled, there is no need to model input of New Transport Cans - Assume 5 Lag storage positions for 3013 (metal) - Assume 5 Lag storage positions for loaded transport cans 90% of the time there is no trouble opening the cans. 10% of time there is trouble opening the conv. can		B. Smith	
Feed Prep	Assume that for modeling purposes if batch cans are recycled, there is no need to model input of new batch cans. 5 positions for 3013 (oxide) lag storage. 90% of the time there is no trouble opening the cans. 10% of time there is trouble opening the conv. can. 6 storage positions to share between pin fuel cans, transport cans from oxidation, and batch cans. Assuming Batch Can Sample Analysis is always okay for processing. 1 Butt can generated every 2 days.	Each batch no more than 2 kg of Pu oxide MC&A complete in 24 hr Green fuel goes straight to crusher staging	B. Smith D. Fisher	X-SYD-K-00004 M&O-NMM-2006-0009

Category	Assumption Description	Note	Owner	Source Document
	10 storage positions for 2 kg Batch Cans			
Mill/Mix	One Batch can processed at a time through mix/milling. Assume that for modeling purposes if Transport Hoppers are recycled; there is no need to model the input of new transport hoppers. Assume no additive feeder. Assume attritor outage due to holdup once every two years. Outage lasts for two weeks.		D. Fisher B. Smith	
Vitrify	Assume that no transfers from Mill/Mix will be made until a melter is available. Assume empty vit cans are loaded near bagless GB. Vit cans are loaded once per day. Loaded 20 at a time.	10 melter units (CIM), when a melter unit is available, receive transport hopper from mix/milling. Provide storage space for min of 20 cooling positions for Vit Cans.	D. Fisher	
Bagless Transfer	Assume empty bagless cans are staged in once per day. Assume 6 positions available for Lag storage of loaded BTC.		B. Smith	
MLS	Pu Vit capable of storing 4 month supply of loaded BTC: - either as 400 loaded magazines - 1600 BTC - combination of above 2 Assume empty magazines are loaded once per week. 35 empty magazines are loaded into lag storage at the same time. Lag storage for 35 empty magazines. Assume 880 positions for interim storage of bagless cans. Assume 32 positions for lag storage of bagless cans. Assume 180 positions for storage of loaded magazines.	Process 4 BTC into a magazine/ hr	L. Milton B. Smith	M-SYD-K-00002
CANL	7 magazines loaded/ DWPF canister 4 positions available for loaded canister. Assume two empty canister shipments per week. Assume a shipment is once per day. Assume that two canisters can be delivered at a time, for a total of 4 canisters per week. Assume that crane is inside and bad weather will not affect unloading/moving of canister		L. Milton B. Smith	M-SYD-K-00003

Category	Assumption Description	Note	Owner	Source Document
	Assume that all canisters pass inspection. Assume that plugs are available.			
CANT	Assume cask/shielding is on the trailer and will not have to be moved for canister loading.		L. Milton B. Smith	
Waste Management	Assume all process steps are in MAA. Assume all 2 man rule. Assume 30 staging positions for unassayed TRU pails. Assume 60 staging positions for assayed TRU pails. Assume 4 assayed drums are staged at a time.		B. Westover E. Estochen B. Smith	

Logic tables for transfers between systems.

Table A3. Transfer 3013s for processing

Category	Assumption Description	Note	Owner	Source Document
Inputs		To Oxidation or Feed Prep from storage.		
Resources required				
Task Duration		Included in MRS subprocess for transfer times and resources required.		
Outputs	3013 Oxide (to FPS) through MHS (Shielded Cart (SC) to Dumb Waiter (DW) to Shielded Cart (SC)) 3013 Metal (to Oxid) through MHS (SC to DW to SC)		M. Petrella	M-ESR-K-00012, Rev. 0
Other				

Table A28. Transfer pin fuel can for processing

Category	Assumption Description	Note	Owner	Source Document
Inputs		To Feed Prep from GFDS.		
Resources required	2 Front End Ops		B. Randall	
Task Duration	15 min			
Outputs	Pin fuel cans (SC to DW to SC) to Feed Prep		M. Petrella	M-ESR-K-00012, Rev. 0
Other				

Table A6. Transfer transport can to Feed Prep

Category	Assumption Description	Note	Owner	Source Document
Inputs		To Feed Prep from Oxidation.		
Resources required	1 Front End Op Conveyor A - 1			
Task Duration	5 min.	Oxide transfer can is loaded into elevator, can is transported up 8 feet to horizontal transfer system, south 46 feet, then down 8 ft to FP GB	M. Petrella	
Outputs	Transport Cans filled with Pu Oxide from Oxidation System (OHC)		M. Petrella	M-ESR-K-00012, Rev. 0
Other				

Table A9. Transfer empty transport can to Oxidation

Category	Assumption Description	Note	Owner	Source Document
Inputs		From Feed Prep to Oxidation.		
Resources required	1 Front End Op Conveyor A - 1			
Task Duration	5 min.	Empty Transport can is loaded into elevator, can is transported up 8 feet to horizontal transfer system, south 46 feet, then down 8 ft to DMO GB	M. Petrella	
Outputs	Empty Transport Cans (OHC)		M. Petrella	M-ESR-K-00012, Rev. 0
Other				

Table A10. Transfer batch can to Mill/Mix, dock at attritor

Category	Assumption Description	Note	Owner	Source Document
Inputs		From Feed Prep to Mill/Mix		
Resources required	1 Front End Op Conveyor B - 1			
Task Duration	5 min.	Hopper is transported up 8 ft into overhead conveyor system, travels approximately 84 ft along two horizontal axis, then is mated to the mill input tube at the hopper outlet = ~ 3 min. Rounded to 5 min for modeling purposes.	M. Petrella	
Outputs	Batch Cans filled with PuOxide to Milling/Mixing System		M. Petrella	M-ESR-K-00012, Rev. 0
Other				

Table A14. Transfer batch can to Feed Prep

Category	Assumption Description	Note	Owner	Source Document
Inputs		From Mill/Mix to Feed Prep		
Resources required	1 Front End Op Conveyor B - 1			
Task Duration	10 min.	Hopper disconnects from mill feed tube, travels back to feed prep box, is weighed, then is ready for reloading = ~ 8 min. Rounded to 10 min for modeling purposes.	M. Petrella	
Outputs	Empty Batch Cans to Feed Prep			

Category	Assumption Description	Note	Owner	Source Document
Other				

Table A15. Transfer Hopper to Vit, dock at Melter

Category	Assumption Description	Note	Owner	Source Document
Inputs		From Mill/Mix to Vit		
Resources required	1 MM Ops Conveyor C - 1			
Task Duration	10 min.	- Hopper travels to melter, including two vertical lifts and approximately 90 ft horizontally, then lowers to mate with cooled melter = ~3 min. - Operator verifies mating with melter = ~ 5 min - Rounded total transfer time to 10 min for modeling purposes.	M. Petrella	
Outputs	Transport Hoppers filled with Frit/Oxide Mix to VIT (OHC)			M-ESR-K-00012, Rev. 0
Other				

Table A18. Recycle Transport hopper to Mill/Mix from Vit

Category	Assumption Description	Note	Owner	Source Document
Inputs		From Vit to Mill/Mix		
Resources required	1 Vit Op Conveyor C - 1			
Task Duration	5 min	- Hopper returns to mill = ~ 2 min. Rounded to 5 min for modeling purposes.	M. Petrella	
Outputs	Empty Transport Hopper			
Other				

Table A19. Transfer vit can to Bagless

Category	Assumption Description	Note	Owner	Source Document
Inputs		From Vit to Bagless Transfer		
Resources required	1 Vit Op Conveyor D - 1			
Task Duration	5 min	- Vit can leaves storage, travels approximately 14 ft to an airlock section at the bagless transfer GB. The can is then manipulated through an airlock to the BT system = ~ 4 min. Rounded to 5 min for modeling purposes.	M. Petrella	

Category	Assumption Description	Note	Owner	Source Document
Outputs	Vit Cans to BTS (Over Head Crane)		M. Petrella	M-ESR-K-00012, Rev. 0
Other				

Table A21. Transfer bagless cans to magazine loading

Category	Assumption Description	Note	Owner	Source Document
Inputs	Bagless cans (from BTS) (SC to DW to SC)	From Bagless Transfer (BT) to Magazine Loading (MLS)		
Resources required				
Task Duration	0	See H.21, "Transfer to bagless can storage area" on the "Bagless Transfer" process flow for duration and resources for the transfer of bagless cans to the bagless can storage area in Magazine Loading.	M. Petrella	
Outputs	Bagless cans in storage			
Other				

Table A27. Return shielded bagless cart

Category	Assumption Description	Note	Owner	Source Document
Inputs		From MLS to BT.		
Resources required	1 NDA Out Ops Shielded Bagless Cart - 1			
Task Duration	15 min	The shielded transfer cart travels, with manual operation, to a freight elevator = ~ 2 min On the elevator, the shielded cart with cans and an operator travel from -40 level to -20 level = ~ 3 min The shield cart and operator leave the elevator and travel approximately 322 ft to the north side of KAC = ~ 4 min. The cart is then attached to a lift to travel to the -14 level then brought 20 ft to mate with the bagless transfer can storage area = ~ 5 min. Total time rounded to 15 min for modeling purposes.	M. Petrella	
Outputs				
Other				

Table A100. Activity for data capture only

Category	Assumption Description	Note	Owner	Source Document
Inputs				
Resources required				
Task Duration				
Outputs				
Other	This function is for modeling purposes only.			

APPENDIX B -

Material Receipt and Storage System Assumptions

Table B.49 Count

Category	Assumption Description	Note	Owner	Source Document
Inputs				
Resources required				
Task Duration				
Outputs				
Other	This function is for modeling purposes only.			

Logic for Material Receipt and Storage of Metal

Table B.4 Unpack 9975 Shipping package (Metal)

Category	Assumption Description	Note	Owner	Source Document
Inputs	9975 Shipping package from KAMS	30% of the time the 9975 is metal.		
Resources required	MRS Hoist - 1 2 Front End Ops 1RCO		L. Milton B. Smith	
Task Duration	30min		L. Milton B. Smith	
Outputs	Empty 9975 3013 Container (Metal) 3013 Container (Oxide)			
Other	Assume no 9975/3013 are contaminated			

Table B.5 Reassemble empty 9975, install TID

Category	Assumption Description	Note	Owner	Source Document

Category	Assumption Description	Note	Owner	Source Document
Inputs	Empty 9975 Shipping package to storage			
Resources required	2 Front End Ops		L. Milton B. Smith	
Task Duration	15 min		L. Milton B. Smith	
Outputs				
Other	Assume no 9975 contaminated.			

Table B.6 Send empty 9975 to storage

Category	Assumption Description	Note	Owner	Source Document
Inputs	Empty 9975 Shipping package to CSSC	Assume to room 910A.		
Resources required	1 Front End Op		L. Milton B. Smith	
Task Duration	15 min	To move down the hall.	L. Milton B. Smith	
Outputs				
Other				

Table B.7 Empty 9975's out of PUV

Category	Assumption Description	Note	Owner	Source Document
Inputs	Empty 9975 Shipping package to CSSC	Assume from 910A to outside MAA.		
Resources required	1 Front End Op		L. Milton B. Smith	
Task Duration	30 min	Done once per day; bring 5 out at a time; put on pallet; put on truck	L. Milton B. Smith	
Outputs				
Other	Assume empty 9975 staged out. Take 9975's out once a day.		L. Milton B. Smith	

Table B.8 Perform GIS measurement on 3013 (metal)

Category	Assumption Description	Note	Owner	Source Document
Inputs				
Resources required	MRS GIS - 1 2 Front End Ops		L. Milton B. Smith	
Task Duration	1 hr		L. Milton B. Smith	
Outputs				
Other		Accountability done on all received shipping packages		X-SYD-K-00001

Table B.38 Place 3013 into Storage during cal baseline

Category	Assumption Description	Note	Owner	Source Document
Inputs	16.67% of the time a baseline is needed. This is based on that a baseline is needed every sixth measurement.			
Resources required	2 Front End Ops MRS 3013 Storage Position (+) 1		B. Smith	
Task Duration	15 min		B. Smith	
Outputs				
Other	Assumes that the vault door doesn't have to be opened and Wackenhut doesn't need to be there.	1000 storage positions per Rev B of the MRS FDD input document.		

Table B.17 Run baseline calorimeter Measurement

Category	Assumption Description	Note	Owner	Source Document
Inputs	Assume baseline is needed 16.67% of the time. Assuming after a baseline and standard are run, the calorimeter is good for 5 measurements before another baseline is needed.	For metal 3013 after GIS measurement.		
Resources required	MRS Calorimeter -1		B. Smith	
Task Duration	8 hrs			
Outputs				
Other	Assume baseline results are always okay.			

Table B.39 Remove 3013 from storage for cal measurement

Category	Assumption Description	Note	Owner	Source Document
Inputs				
Resources required	2 Front End Ops MRS 3013 Storage Position (-) 1		B. Smith	
Task Duration	15 min		B. Smith	
Outputs				
Other	Assumes that the vault door doesn't have to be opened and Wackenhut doesn't need to be there.	1000 storage positions per Rev B of the MRS FDD input document.		

Table B.27 Load Calorimeter

Category	Assumption Description	Note	Owner	Source Document
Inputs				
Resources required	MRS Calorimeter -1 2 Front End Ops		B. Smith	
Task Duration	35 min		B. Smith	
Outputs				
Other				

Table B.20 Perform Calorimeter measurement on 3013

Category	Assumption Description	Note	Owner	Source Document
Inputs				
Resources required	MRS Calorimeter -1		B. Smith	
Task Duration	8 hours		B. Smith	
Outputs				
Other				

Table B.28 Unload Calorimeter

Category	Assumption Description	Note	Owner	Source Document
Inputs				
Resources required	MRS Calorimeter -1 2 Front End Ops		B. Smith	
Task Duration	30 min		B. Smith	
Outputs				
Other				

Table B.40 Place 3013 into storage

Category	Assumption Description	Note	Owner	Source Document
Inputs	This function is done if a calorimeter standard is needed. A standard is needed for every five measurements.			
Resources required	2 Front End Ops MRS 3013 Storage Position (+) 1		B. Smith	
Task Duration	15 min		B. Smith	
Outputs				
Other	Assumes that the vault door doesn't have to be opened and Wackenhut doesn't need to be there.	1000 storage positions per Rev B of the MRS FDD input document.		

Table B.22 Run Calorimeter Standard

Category	Assumption Description	Note	Owner	Source Document
Inputs				

Category	Assumption Description	Note	Owner	Source Document
Resources required	MRS Calorimeter -1			
Task Duration	8 hr		B. Smith	
Outputs				
Other				

Table B.24 Re-run calorimeter standard

Category	Assumption Description	Note	Owner	Source Document
Inputs		Go here if calorimeter results are not okay. Assume 1% of time calorimeter results are not okay.		
Resources required	MRS Calorimeter – 1		B. Smith	
Task Duration	8 hr		B. Smith	
Outputs				
Other	Assume that after standard re-run, results are acceptable.			

Table B.68 Unload Standard

Category	Assumption Description	Note	Owner	Source Document
Inputs				
Resources required	2 Front End Ops MRS Calorimeter - 1		B. Smith	
Task Duration	30 min		B. Smith	
Outputs				
Other				

Table B.67 Unload Standard

Category	Assumption Description	Note	Owner	Source Document
Inputs		Go here if calorimeter results are okay. Assume 99% of time calorimeter results are okay.		
Resources required	2 Front End Ops MRS Calorimeter - 1		B. Smith	

Category	Assumption Description	Note	Owner	Source Document
Task Duration	30 min		B. Smith	
Outputs				
Other				

Logic for Material Receipt and Storage of Oxide.

Table B.52 Don't start oxide if NMC is out of service

Category	Assumption Description	Note	Owner	Source Document
Inputs		70% of the time the 9975 is oxide.		
Resources required				
Task Duration				
Outputs				
Other	This function if for modeling purposes only.			

Table B.50 Unpack 9975 shipping package (oxide)

Category	Assumption Description	Note	Owner	Source Document
Inputs				
Resources required	2 Front End Operators 1 RCO MRS Hoist - 1			
Task Duration	30 min			
Outputs				
Other				

Table B.51 Perform GIS measurement on 3013 (oxide)

Category	Assumption Description	Note	Owner	Source Document
Inputs				
Resources required	2 Front End Operators MRS GIS - 1			
Task Duration	60 min			

Category	Assumption Description	Note	Owner	Source Document
Outputs				
Other				

Table B.10 Neutron Multiplicity

Category	Assumption Description	Note	Owner	Source Document
Inputs		Done only on oxides.	L. Milton B. Smith	
Resources required	MRS NMC - 1 2 Front End Ops		L. Milton B. Smith	
Task Duration	1 hr		L. Milton B. Smith	
Outputs				
Other				

Logic for both Metal and Oxide

Table B.11 Place 3013 into Storage

Category	Assumption Description	Note	Owner	Source Document
Inputs		When calorimeter standard complete, then store Also, store Oxide once done with NMC.		
Resources required	2 Front End Ops MRS 3013 Storage position (+) 1	Assumes that the vault door doesn't have to be opened and Wackenhut doesn't need to be there.	L. Milton B. Smith	
Task Duration	15 min	Use of manual cart, put in storage position, record storage position, documentation. Assume that do not have to open door, and that Wakenhut is not required for vault entry.	L. Milton B. Smith	
Outputs				
Other		1000 storage positions per Rev B of the MRS FDD input document.		X-SYD-K-00001

Table B.60 Count

Category	Assumption Description	Note	Owner	Source Document
Inputs				
Resources required				
Task Duration				
Outputs				
Other	This function is for modeling purposes only.			

Table B.12 Store 3013

Category	Assumption Description	Note	Owner	Source Document
Inputs				
Resources required				
Task Duration				
Outputs				
Other	The purpose of this function is to capture a storage position.	Max of 1,000 3013 containers.		

Table B.13 Block until ready to move from vault

Category	Assumption Description	Note	Owner	Source Document
Inputs				
Resources required	MRS 3013 Storage Position (-) 1			
Task Duration				
Outputs				
Other	Assume 4 3013 are sent from vault to Oxid/feed prep and 1 3013 sent to feed prep from GFDS. Of 4 3013, 1 is metal and 3 are oxide. This function is for modeling control purposes only.	The schedule for 3013 retrieval from vault is 1 time per day on night shift.	B. Smith	

Table B.41 Check if 3013s are out of vault

Category	Assumption Description	Note	Owner	Source Document
Inputs				
Resources required				

Category	Assumption Description	Note	Owner	Source Document
Task Duration				
Outputs				
Other	This function is for modeling control purposes only.			

Table B.14 Retrieve from vault, load cart, transfer to dumbwaiter, send to first floor

Category	Assumption Description	Note	Owner	Source Document
Inputs				
Resources required	4 Front End Ops MRS 3013 Cart -1 MRS Dumbwaiter - 1		L. Milton B. Smith	
Task Duration	30 min per cart	Once out of vault 2 operators must be at top of dumb waiter, and 2 operators at bottom of dump waiter. This is scheduled once a day. Same time everyday, on night shift. Put entire cart on dumb waiter. Do two evolutions of 15 min each to get two carts downstairs.	L. Milton B. Smith	
Outputs				
Other	Cart will carry 2 3013's at a time. Material limits will allow only 2 containers at a time.			

Table B.15 Transport to GB input station

Category	Assumption Description	Note	Owner	Source Document
Inputs				
Resources required	2 Front End Ops MRS 3013 Cart -1			
Task Duration	15 min per cart	Per input from M. Petrella, transfer from dumbwaiter to GB input station is 10 min/cart. This gives 20 min for 2 carts. The time for transfer per cart is assumed to be 15 minutes to allow for case where 3 3013 are oxide and 1 is metal. This would give 20 min for 2 carts to FP and then the cart (with the remaining metal 3013) to go to oxidation (10 min more).	L. Milton B. Smith M. Petrella	
Outputs	Oxide to Feed Prep Metal to Oxidation			
Other				

Logic to schedule 3013 retrieval from vault.

Table B.29 Set scenario variable for vault retrieval

Category	Assumption Description	Note	Owner	Source Document
Inputs		One time per day on night shift.	B. Smith	
Resources required				
Task Duration				
Outputs				
Other	This function is for modeling purposes only.	Per Bob Smith at 7/13/06 meeting, assume that 4 3013 are sent from vault to oxidation/feed prep and one 3013 is sent to feed prep from green fuel disassembly. Also assume that of the four 3013s, one is metal and three are oxides.		

Table B.55 Time Delay

Category	Assumption Description	Note	Owner	Source Document
Inputs				
Resources required				
Task Duration	10 min		B. Smith	
Outputs				
Other	Time delay for vault retrieval.			

Table B.56 Check for Vault Activity

Category	Assumption Description	Note	Owner	Source Document
Inputs				
Resources required				
Task Duration				
Outputs				
Other	This function is for modeling purposes only.			

Logic to return to unpackaging 9975's.

Table B.58 Set scenario variable to allow unpackaging

Category	Assumption Description	Note	Owner	Source Document
Inputs				
Resources required				
Task Duration				
Outputs				
Other	This function is for modeling purposes only.			

Table B.59 Reset counter

Category	Assumption Description	Note	Owner	Source Document
Inputs				
Resources required				
Task Duration				
Outputs				
Other	This function is for modeling purposes only.			

APPENDIX C -

Green Fuel Disassembly System Assumptions

Table C.1 Open HUFP and CCC

Category	Assumption Description	Note	Owner	Source Document
Inputs		Start with HUFP in rack.		
Resources required	2 Front End Ops 1 RCO		K. Oldfield	
Task Duration	30 min	Time is for performing TID and removing bolts.	K. Oldfield	
Outputs				
Other	Per 8/17/06 meeting with Kraig Oldfield, the assumption is made that the HUFP will be stored with the top impact limiter already removed and, thusly, will not require removal prior to opening the HUFP.			

Logic if CCC contains DFA.

Table C.27 Add transactions, 7 DFA's / CCC

Category	Assumption Description	Note	Owner	Source Document
Inputs		69.23% of the time CCC contains a DFA. This is based on an assumption that 9/13 HUFP/CCC's contain DFA's.		
Resources required				
Task Duration				
Outputs				
Other	This function is for modeling purposes only.			

Table C.2 Remove DFA from HUFP/CCC

Category	Assumption Description	Note	Owner	Source Document
Inputs		.		
Resources required	GFDS Overhead Crane – 1 2 Front End Ops 1 RCO		K. Oldfield	

Category	Assumption Description	Note	Owner	Source Document
Task Duration	1 hr		K. Oldfield	
Outputs	DFA Ident-69			
Other				

Table C.28 DFA Counter

Category	Assumption Description	Note	Owner	Source Document
Inputs				
Resources required				
Task Duration				
Outputs				
Other	This function is for modeling purposes only.			

Table C.19 Place DFA in Hood

Category	Assumption Description	Note	Owner	Source Document
Inputs				
Resources required	2 Front End Ops 1 RCO		K. Oldfield	
Task Duration	1 hr		K. Oldfield	
Outputs				
Other				

Table C.4 Open DFA

Category	Assumption Description	Note	Owner	Source Document
Inputs				
Resources required	2 Front End Ops		K. Oldfield	
Task Duration	15 hrs		K. Oldfield	
Outputs	22 pin bundles			

Category	Assumption Description	Note	Owner	Source Document
Other				

Table C.5 Remove pins and Transfer all to glovebox (DFA)

Category	Assumption Description	Note	Owner	Source Document
Inputs				
Resources required	2 Front End Ops		K. Oldfield	
Task Duration	1 hr	Pull pin bundle out and position in GB. Was previously 10 min per pin bundle. At an assumption of 22 pin bundles with 10 pins per bundle that gave a total time for transferring pins into the glovebox of 3.67 hours. Now, assuming that bundles will be disassembled in the hood and pins will be transferred individually after they are removed from the DFA, revise this time to 1 hour for transferring all pins into the glovebox (per phone conversation with Kraig Oldfield 9/20/06).	K. Oldfield	
Outputs	Pin bundle			
Other		Duplicate 217 times fro 217 pins.		

Table C.6 Position pin for fuel separation (DFA)

Category	Assumption Description	Note	Owner	Source Document
Inputs	Pin bundle			
Resources required	2 Front End Ops		K. Oldfield	
Task Duration	10 min		K. Oldfield	
Outputs	Disassembled pin bundle			
Que/Trigger				
Other				

Table C.7 Cut pin and remove contents (DFA)

Category	Assumption Description	Note	Owner	Source Document
Inputs				
Resources required	2 Front End Ops		K. Oldfield	
Task Duration	30 min		K. Oldfield	

Category	Assumption Description	Note	Owner	Source Document
Outputs	Fuel pellets and waste			
Other				

Table C.8 Separate fuel pellets from waste

Category	Assumption Description	Note	Owner	Source Document
Inputs				
Resources required	2 Front End Ops		K. Oldfield	
Task Duration	45 min	This activity time of 45 minutes includes placing individual fuel pellets into the pin fuel cans during the sorting operation.	K. Oldfield	
Outputs				
Other				

Table C.29 Set ready for next DFA variable

Category	Assumption Description	Note	Owner	Source Document
Inputs				
Resources required				
Task Duration				
Outputs				
Other	This function is for modeling purposes only.			

Ident-69 Logic starts here.

CCC A Logic.

Table C.31 6 Idents/CCC A

Category	Assumption Description	Note	Owner	Source Document
Inputs	Assume that 25% of time there is a type A present.	Per “Hanford Unirradiated Fuel Package (HUFP)” presentation.	K. Oldfield	

Category	Assumption Description	Note	Owner	Source Document
Resources required				
Task Duration				
Outputs				
Other	This function is for modeling purposes only.			

Table C.32 Remove Ident from CCC A

Category	Assumption Description	Note	Owner	Source Document
Inputs				
Resources required	2 Front End Ops 1 RCO GFDS Overhead Crane - 1		K. Oldfield	
Task Duration	1 hr		K. Oldfield	
Outputs				
Other				

Table C.33 Place CCC A Ident in hood

Category	Assumption Description	Note	Owner	Source Document
Inputs				
Resources required	1 RCO 2 Front End Ops		K. Oldfield	
Task Duration	1 hr		K. Oldfield	
Outputs				
Other				

Table C.20 Open CCC A Ident-69

Category	Assumption Description	Note	Owner	Source Document
Inputs				
Resources required	2 Front End Ops		K. Oldfield	
Task Duration	1 hr		K. Oldfield	

Category	Assumption Description	Note	Owner	Source Document
Outputs	187 pins/Type A		K. Oldfield	
Other	Per the "Hanford Unirradiated Fuel Package (HUFP)" presentation: - 6 Type A Idents with total of 1122 pins – average of 187 pins/Type A Ident-69 - 5 Type B Idents with total of 1189 pins – average of 238 pins/Type B Ident-69 - 6 Type C Idents with total of 1283 pins – average of 214 pins/Type C Ident-69 - 4 Type D Idents with total of 531 pins – average of 133 pins/Type D Ident-69			

Table C.34 Remove pins and transfer into glovebox (CCC A Ident)

Category	Assumption Description	Note	Owner	Source Document
Inputs				
Resources required	2 Front End Ops			
Task Duration	1 hr	1 hour for transferring all 187 pins into the glovebox (per phone conversation with Kraig Oldfield 9/20/06).	K. Oldfield	
Outputs				
Other				

Table C.35 Cut pin and remove contents (CCC A Ident)

Category	Assumption Description	Note	Owner	Source Document
Inputs				
Resources required	2 Front End Ops		K. Oldfield	
Task Duration	30 min		K. Oldfield	
Outputs				
Other	Duplicate 187 times.			

Table C.36 Separate fuel pellets from waste (CCC A Ident)

Category	Assumption Description	Note	Owner	Source Document
Inputs				

Category	Assumption Description	Note	Owner	Source Document
Resources required	2 Front End Ops		K. Oldfield	
Task Duration	45 min	This activity time of 45 minutes includes placing individual fuel pellets into the pin fuel cans during the sorting operation.	K. Oldfield	
Outputs				
Other				

Table C.37 Set ready for next CCC A Ident variable

Category	Assumption Description	Note	Owner	Source Document
Inputs				
Resources required				
Task Duration				
Outputs				
Other	This function is for modeling purposes only.			

CCC B Logic.

Table C.38 5 Idents/CCC B

Category	Assumption Description	Note	Owner	Source Document
Inputs	Assume that 25% of time there is a type B present.	Per "Hanford Unirradiated Fuel Package (HUFP)" presentation.	K. Oldfield	
Resources required				
Task Duration				
Outputs				
Other	This function is for modeling purposes only.			

Table C.39 Remove Ident from CCC B

Category	Assumption Description	Note	Owner	Source Document
Inputs				

Category	Assumption Description	Note	Owner	Source Document
Resources required	2 Front End Ops 1 RCO GFDS Overhead Crane - 1		K. Oldfield	
Task Duration	1 hr		K. Oldfield	
Outputs				
Other				

Table C.40 Place CCC B Ident in hood

Category	Assumption Description	Note	Owner	Source Document
Inputs				
Resources required	1 RCO 2 Front End Ops		K. Oldfield	
Task Duration	1 hr		K. Oldfield	
Outputs				
Other				

Table C.21 Open CCC B Ident-69

Category	Assumption Description	Note	Owner	Source Document
Inputs			K. Oldfield	
Resources required	2 Front End Ops		K. Oldfield	
Task Duration	1 hr		K. Oldfield	
Outputs	238 pins/Type B		K. Oldfield	
Other	Per the "Hanford Unirradiated Fuel Package (HUFP)" presentation: - 6 Type A Idents with total of 1122 pins – average of 187 pins/Type A Ident-69 - 5 Type B Idents with total of 1189 pins – average of 238 pins/Type B Ident-69 - 6 Type C Idents with total of 1283 pins – average of 214 pins/Type C Ident-69 - 4 Type D Idents with total of 531 pins – average of 133 pins/Type D Ident-69			

Table C.13 Remove pin and transfer into glovebox (CCC B Ident)

Category	Assumption Description	Note	Owner	Source Document
Inputs				
Resources required	2 Front End Ops		K. Oldfield	
Task Duration	1 hr	1 hour for transferring all pins into the glovebox (per phone conversation with Kraig Oldfield 9/20/06).	K. Oldfield	
Outputs	Fuel pin			
Other				

Table C.15 Cut pin and remove contents (CCC B Ident)

Category	Assumption Description	Note	Owner	Source Document
Inputs				
Resources required	2 Front End Ops		K. Oldfield	
Task Duration	30 min		K. Oldfield	
Outputs	Fuel pellets and waste			
Other	Duplicate 238 times.	No separate bundle here.		

Table C.26 Separate fuel pellets from waste (CCC B Ident)

Category	Assumption Description	Note	Owner	Source Document
Inputs				
Resources required	2 Front End Ops		K. Oldfield	
Task Duration	45 min	This activity time of 45 minutes includes placing individual fuel pellets into the pin fuel cans during the sorting operation.	K. Oldfield	
Outputs				
Other				

Table C.41 Set ready for next CCC B Ident variable

Category	Assumption Description	Note	Owner	Source Document
Inputs				
Resources required				

Category	Assumption Description	Note	Owner	Source Document
Task Duration				
Outputs				
Other	This function is for modeling purposes only.			

CCC C Logic.

Table C.42 6 Idents/CCC C

Category	Assumption Description	Note	Owner	Source Document
Inputs	Assume that 25% of time there is a type C present.	Per "Hanford Unirradiated Fuel Package (HUFP)" presentation.	K. Oldfield	.
Resources required				
Task Duration				
Outputs				
Other	This function is for modeling purposes only.			

Table C.43 Remove Ident from CCC C

Category	Assumption Description	Note	Owner	Source Document
Inputs				
Resources required	2 Front End Ops 1 RCO GFDS Overhead Crane - 1		K. Oldfield	
Task Duration	1 hr		K. Oldfield	
Outputs				
Other				

Table C.44 Place CCC C Ident in hood

Category	Assumption Description	Note	Owner	Source Document
Inputs				
Resources required	2 Front End Ops		K. Oldfield	

Category	Assumption Description	Note	Owner	Source Document
	1 RCO			
Task Duration	1 hr		K. Oldfield	
Outputs				
Other				

Table C.22 Open CCC C Ident-69

Category	Assumption Description	Note	Owner	Source Document
Inputs				
Resources required	2 Front End Ops		K. Oldfield	
Task Duration	1 hr		K. Oldfield	
Outputs	214 pins/Type C		K. Oldfield	
Other	Per the "Hanford Unirradiated Fuel Package (HUFP)" presentation: - 6 Type A Idents with total of 1122 pins – average of 187 pins/Type A Ident-69 - 5 Type B Idents with total of 1189 pins – average of 238 pins/Type B Ident-69 - 6 Type C Idents with total of 1283 pins – average of 214 pins/Type C Ident-69 - 4 Type D Idents with total of 531 pins – average of 133 pins/Type D Ident-69			

Table C.45 Remove pin and transfer into glovebox (CCC C Ident)

Category	Assumption Description	Note	Owner	Source Document
Inputs				
Resources required	2 Front End Ops		K. Oldfield	
Task Duration	1 hr	1 hour for transferring all pins into the glovebox (per phone conversation with Kraig Oldfield 9/20/06).	K. Oldfield	
Outputs	Fuel pin			
Other				

Table C.46 Cut pin and remove contents (CCC C Ident)

Category	Assumption Description	Note	Owner	Source Document
Inputs				
Resources required	2 Front End Ops		K. Oldfield	
Task Duration	30 min		K. Oldfield	
Outputs	Fuel pellets and waste			
Other	Duplicate 214 times.	No separate bundle here.		

Table C.47 Separate fuel pellets from waste (CCC C Ident)

Category	Assumption Description	Note	Owner	Source Document
Inputs				
Resources required	2 Front End Ops		K. Oldfield	
Task Duration	45 min	This activity time of 45 minutes includes placing individual fuel pellets into the pin fuel cans during the sorting operation.	K. Oldfield	
Outputs				
Other				

Table C.48 Set ready for next CCC C Ident variable

Category	Assumption Description	Note	Owner	Source Document
Inputs				
Resources required				
Task Duration				
Outputs				
Other	This function is for modeling purposes only.			

CCC D Logic.

Table C.49 4 Idents/CCC D

Category	Assumption Description	Note	Owner	Source Document
Inputs	Assume that 25% of time there is a type D present.	Per "Hanford Unirradiated Fuel Package (HUFP)" presentation.	K. Oldfield	.
Resources required				
Task Duration				
Outputs				
Other	This function is for modeling purposes only.			

Table C.50 Remove Ident from CCC D

Category	Assumption Description	Note	Owner	Source Document
Inputs				
Resources required	2 Front End Ops 1 RCO GFDS Overhead Crane - 1		K. Oldfield	
Task Duration	1 hr		K. Oldfield	
Outputs				
Other				

Table C.51 Place CCC D Ident in hood

Category	Assumption Description	Note	Owner	Source Document
Inputs				
Resources required	2 Front End Ops 1 RCO		K. Oldfield	
Task Duration	1 hr		K. Oldfield	
Outputs				
Other				

Table C.23 Open CCC D Ident-69

Category	Assumption Description	Note	Owner	Source Document

Category	Assumption Description	Note	Owner	Source Document
Inputs				
Resources required	2 Front End Ops		K. Oldfield	
Task Duration	1 hr		K. Oldfield	
Outputs	133 pins/Type D		K. Oldfield	
Other	Per the "Hanford Unirradiated Fuel Package (HUFP)" presentation: - 6 Type A Idents with total of 1122 pins – average of 187 pins/Type A Ident-69 - 5 Type B Idents with total of 1189 pins – average of 238 pins/Type B Ident-69 - 6 Type C Idents with total of 1283 pins – average of 214 pins/Type C Ident-69 - 4 Type D Idents with total of 531 pins – average of 133 pins/Type D Ident-69			

Table C.52 Remove pin and transfer into glovebox (CCC D Ident)

Category	Assumption Description	Note	Owner	Source Document
Inputs				
Resources required	2 Front End Ops		K. Oldfield	
Task Duration	1 hr	1 hour for transferring all pins into the glovebox (per phone conversation with Kraig Oldfield 9/20/06).	K. Oldfield	
Outputs	Fuel pin			
Other				

Table C.53 Cut pin and remove contents (CCC D Ident)

Category	Assumption Description	Note	Owner	Source Document
Inputs				
Resources required	2 Front End Ops		K. Oldfield	
Task Duration	30 min		K. Oldfield	
Outputs	Fuel pellets and waste			
Other	Duplicate 133 times.	No separate bundle here.		

Table C.54 Separate fuel pellets from waste (CCC D Ident)

Category	Assumption Description	Note	Owner	Source Document
Inputs				
Resources required	2 Front End Ops		K. Oldfield	
Task Duration	45 min	This activity time of 45 minutes includes placing individual fuel pellets into the pin fuel cans during the sorting operation.	K. Oldfield	
Outputs				
Other				

Table C.55 Set ready for next CCC D Ident variable

Category	Assumption Description	Note	Owner	Source Document
Inputs				
Resources required				
Task Duration				
Outputs				
Other	This function is for modeling purposes only.			

Logic for DFA, CCC A Ident, CCC B Ident, CCC C Ident, and CCC D Ident.

Table C.11 Load pin fuel can with pellets from 17 pins

Category	Assumption Description	Note	Owner	Source Document
Inputs	Fuel pellets			
Resources required				
Task Duration	0 sec		K. Oldfield	
Outputs	Loaded pin fuel can			
Other	Collect 17 pins per pin fuel can. Time for actually placing fuel pellets in the pin fuel can is included in C.8, C.36, C.26, C.47, and C.54, "Separate fuel pellets from waste". This activity is included in order to batch pins into a group of 17 for each pin fuel can.			

Table C.12 Bagout pin fuel can and waste

Category	Assumption Description	Note	Owner	Source Document
Inputs				
Resources required	2 Front End Ops 1 RCO		K. Oldfield	
Task Duration	1 hr	Time includes set up and 3 min of work.	K. Oldfield	
Outputs	Pin fuel can Waste			
Other	Assume can bagout pin fuel can and waste at the same time.			

Table C.56 Complete GIS measurement

Category	Assumption Description	Note	Owner	Source Document
Inputs				
Resources required	2 Front End Ops GFDS GIS - 1		K. Oldfield	
Task Duration	60 min		K. Oldfield	
Outputs				
Other				

Table C.57 Complete NMC measurement

Category	Assumption Description	Note	Owner	Source Document
Inputs				
Resources required	2 Front End Ops GFDS NMC - 1		K. Oldfield	
Task Duration	60 min		K. Oldfield	
Outputs				
Other				

Table C.18 Transfer pin fuel can to Feed Prep

Category	Assumption Description	Note	Owner	Source Document
Inputs				

Category	Assumption Description	Note	Owner	Source Document
Resources required				
Task Duration				
Outputs				
Other	See "Pu Vit Top Level", activity A.26 for resources and transfer time for transfer of pin fuel can to Feed Prep.			

Table C.101 Test activity to discard trans

Category	Assumption Description	Note	Owner	Source Document
Inputs				
Resources required				
Task Duration				
Outputs				
Other	This function is for modeling purposes only.			

Table C.100 Test activity to discard trans

Category	Assumption Description	Note	Owner	Source Document
Inputs				
Resources required				
Task Duration				
Outputs				
Other	This function is for modeling purposes only.			

Table C.17 Manage Waste

Category	Assumption Description	Note	Owner	Source Document
Inputs				
Resources required				
Task Duration				
Outputs				

Category	Assumption Description	Note	Owner	Source Document
Other	See Waste Management Logic.			

APPENDIX D -

Oxidation System Assumptions

Table D.30 Check for lag storage position

Category	Assumption Description	Note	Owner	Source Document
Inputs		Come here if there is not a transport can.		
Resources required				
Task Duration				
Outputs				
Other	This function is for modeling purposes only.			

Table D.2 Batch 3013s

Category	Assumption Description	Note	Owner	Source Document
Inputs				
Resources required				
Task Duration				
Outputs				
Other	This function is for modeling purposes only.			

Table D.3 Receive and Stage in 3013 (metal)

Category	Assumption Description	Note	Owner	Source Document
Inputs	3013 Container filled with metal from CSSC rack			
Resources required	2 Front End Ops		B. Randall	
Task Duration	15 min	Time to unload cart and put 3013's into GB. Time is for one or more 3013's.	B. Randall	
Outputs				
Other		Incoming metal <= 4.4 kg Pu		X-SYD-K-00003

Table D.4 Lag store 3013 (Metal)

Category	Assumption Description	Note	Owner	Source Document
Inputs				
Resources required	2 Front End Ops DMO Lag Store Input Position - 1		B. Randall	
Task Duration	10 min	10 min for each 3013 to put into storage	B. Randall	
Outputs	Empty 3013 Outer Container			
Other	5 Lag storage positions		B. Randall	

Table D.5 Open Outer 3013 (Metal)

Category	Assumption Description	Note	Owner	Source Document
Inputs				
Resources required	DMO Outer Can cutter - 1 2 Front End Ops		B. Randall	
Task Duration	30 min	Time includes transfer from staging to can cutter and weighing.	B. Randall	
Outputs	Empty 3013 Outer Container			
Other				

Table D.6 Open Inner 3013 (metal) & conv can

Category	Assumption Description	Note	Owner	Source Document
Inputs				
Resources required	DMO Inner Can cutter - 1 2 Front End Ops		B. Randall	
Task Duration	30 min	Time includes transfer from outer can cutter and weighing.	B. Randall	
Outputs				
Other		2 in lag storage (5 kg each = 10 kg)		

Table D.17 Interim store outer 3013 (metal) waste

Category	Assumption Description	Note	Owner	Source Document
Inputs				
Resources required				
Task Duration				
Outputs				
Other	This function is a place holder in model logic.			

Table D.18 Stage out outer 3013 (metal) waste

Category	Assumption Description	Note	Owner	Source Document
Inputs				
Resources required	2 Front End Ops		B. Randall	
Task Duration	30 min		B. Randall	
Outputs				
Other		Outer 3013 is clean waste or low level waste		X-SYD-K-00003

Table D.101 Test activity to discard transactions (when indicated in red)

Category	Assumption Description	Note	Owner	Source Document
Inputs				
Resources required				
Task Duration				
Outputs				
Other	This function is for modeling purposes only.			

Table D.21 Manage Waste

Category	Assumption Description	Note	Owner	Source Document
Inputs				
Resources required				
Task Duration				

Category	Assumption Description	Note	Owner	Source Document
Outputs				
Other	See logic for Waste Management.			

Table D.8 Open Inner and conv. can

Category	Assumption Description	Note	Owner	Source Document
Inputs	10% of time there is trouble opening the conv. can so have to open using special tools and come to this function. 90% of time there is no trouble and this function is not done.			
Resources required	DMO Inner Can Cutter - 1 2 Front End Ops		B. Randall	
Task Duration	30 min		B. Randall	
Outputs				
Other				

Table D.9 Weigh 3013 (metal) contents

Category	Assumption Description	Note	Owner	Source Document
Inputs	3013 (metal) container Convenience Can Empty Furnace Basket			
Resources required	2 Front End Ops		B. Randall	
Task Duration	5 min.		B. Randall	
Outputs	Furnace basket with 3013 (metal) material Furnace basket with convenience can material Empty 3013 Inner container Empty convenience can			
Other				

Table D.10 Interim store inner 3013 (metal) / Convenience Can waste

Category	Assumption Description	Note	Owner	Source Document
Inputs				

Category	Assumption Description	Note	Owner	Source Document
Resources required				
Task Duration				
Outputs				
Other	Lag Storage for emptied convenience cans so not interrupt processing. Convenience can occur 50% of the time. This function is a place holder in model logic.		B. Randall	

Table D.11 Stage Out Inner 3013 (metal) / convenience can waste

Category	Assumption Description	Note	Owner	Source Document
Inputs				
Resources required	2 Front End Ops		B. Randall	
Task Duration	30 min		B. Randall	
Outputs	Empty 3013 Container Parts from Oxidation (Inner 3013 and conv. can is TRU waste)			
Other				

Table D.100 Test activity to discard transactions (when indicated in red)

Category	Assumption Description	Note	Owner	Source Document
Inputs				
Resources required				
Task Duration				
Outputs				
Other	This function is for modeling purposes only.			

Table D.22 Manage Waste

Category	Assumption Description	Note	Owner	Source Document
Inputs				

Category	Assumption Description	Note	Owner	Source Document
Resources required				
Task Duration				
Outputs				
Other	See logic for Waste Management.			

Table D.12 Load DMO Furnace

Category	Assumption Description	Note	Owner	Source Document
Inputs				
Resources required	DMO Furnace - 1 2 Front End Ops		B. Randall	
Task Duration	55 min	Time includes: Dump metal into basket (10min), load basket in furnace (15 min), prepare oxide procedures, furnace startup (30 min)	B. Randall	
Outputs				
Other				

Table D.13 Oxidize Metal

Category	Assumption Description	Note	Owner	Source Document
Inputs				
Resources required	DMO Furnace (1 can per furnace) - 1		B. Randall	
Task Duration	11.5 hours		Bob Smith B. Randall	
Outputs				
Other		Furnace sized to receive and oxidize material in 1 -3013. Temp. = 600C		X-SYD-K-00003

Table D.31 Complete GIC measurement

Category	Assumption Description	Note	Owner	Source Document
Inputs				
Resources required	DMO GIC – 1 2 Front End Ops		B. Randall	

Category	Assumption Description	Note	Owner	Source Document
Task Duration	60 min		Bob Smith B. Randall	
Outputs				
Other				

Table D.32 Complete NMC measurement

Category	Assumption Description	Note	Owner	Source Document
Inputs				
Resources required	DMO NMC – 1 2 Front End Ops		B. Randall	
Task Duration	60 min		Bob Smith B. Randall	
Outputs				
Other				

Table D.14 Transfer transport Can and weigh

Category	Assumption Description	Note	Owner	Source Document
Inputs				
Resources required	2 Front End Ops		B. Randall	
Task Duration	35 min	Time is for moving empty basket, moving transport can out of furnace, weighing, sending to staging, and preparing for next use.	B. Randall	
Outputs	Loaded Transport Can Empty Furnace Basket			
Other				

Table D.15 Lag store loaded transport can

Category	Assumption Description	Note	Owner	Source Document
Inputs				
Resources required	2 Front End Ops DMO Load Trans Can Lag Store - 1		B. Randall	

Category	Assumption Description	Note	Owner	Source Document
Task Duration	15 min		B. Randall	
Outputs				
Other	5 loaded Transport Can Lag Storage positions		B. Randall	

Table D.16 Stage Out Transport Can

Category	Assumption Description	Note	Owner	Source Document
Inputs		Acceptable oxide in TC		
Resources required	2 Front End Ops		B. Randall	
Task Duration	10 min		B. Randall	
Outputs	Transport Can Filled with Oxide			
Other				

Table D.23 Test activity to discard transactions (when indicated in red)

Category	Assumption Description	Note	Owner	Source Document
Inputs				
Resources required				
Task Duration				
Outputs				
Other	This function is for modeling purposes only.			

Logic for Recycled Empty Transport Cans from Feed Prep.

Table D.19 Stage in Transport Cans

Category	Assumption Description	Note	Owner	Source Document
Inputs	Empty Transport Can from FPS			
Resources required	2 Front End Ops		B. Randall	
Task Duration	10 min		B. Randall	
Outputs				

Category	Assumption Description	Note	Owner	Source Document
Ques/Triggers				
Other	Assume for modeling purposes, that if transport cans are recycled, there is no need to model input for new transport cans.		B. Smith	

Table D.20 Lag store empty transport can

Category	Assumption Description	Note	Owner	Source Document
Inputs				
Resources required				
Task Duration				
Outputs				
Ques/Triggers				
Other	Assume can hold as many transport cans as come in. This function severs as a place holder for model logic.		B. Randall	

APPENDIX E -

Feed Preparation System Assumptions

Logic for Oxide into Feed Prep.

Table E.59 Check for lag storage position

Assumption No.	Category	Assumption Description	Note	Owner	Source Document
	Inputs		If not a recycled batch can from Mill/Mix, and if not oxide in transport cans from Oxidation and not Pin fuel can, then is oxide in 3013 from MRS.		
	Resources required				
	Task Duration				
	Outputs				
	Other	This function is to capture a storage postion.			

Table E.4 Batch 3013's

Assumption No.	Category	Assumption Description	Note	Owner	Source Document
	Inputs	3013 Containers of Oxide from MRS			
	Resources required				
	Task Duration				
	Outputs				
	Other	This function serves as a place holder for model logic.			

Table E.5 Receive and Stage in 3013 (oxide)

Assumption No.	Category	Assumption Description	Note	Owner	Source Document
	Inputs	3013 Containers of Oxide from MRS			
	Resources required	2 Front End Ops		B. Randall	
	Task Duration	15 min		B. Randall	

Assumption No.	Category	Assumption Description	Note	Owner	Source Document
	Outputs				
	Other				

Table E.6 Place 3013 (oxide) in lag storage

Assumption No.	Category	Assumption Description	Note	Owner	Source Document
	Inputs				
	Resources required	2 Front End Ops FP Lag Store Oxide Input Position - 1		B. Randall	
	Task Duration	10 min/ can		B. Randall	
	Outputs				
	Other	5 positions for lag storage.		B. Randall	

Table E.7 Lag Store 3013 (oxide)

Assumption No.	Category	Assumption Description	Note	Owner	Source Document
	Inputs				
	Resources required	FP Lag Store Oxide Input Position - 1			
	Task Duration				
	Outputs				
	Other	The purpose of this function is to capture a storage position.			

Table E.45 Open outer 3013 (oxide)

Assumption No.	Category	Assumption Description	Note	Owner	Source Document
	Inputs				
	Resources required	2 Front End Ops FP Outer Can Cutter – 1		B. Randall	
	Task Duration	30 min	Includes transfer from staging to can cutter and weighing	B. Randall	
	Outputs				
	Other				

Table E.8 Vent Inner 3013 (oxide)

Assumption No.	Category	Assumption Description	Note	Owner	Source Document
	Inputs				
	Resources required	FP Can puncture device -1 2 Front End Ops		B. Randall	
	Task Duration	90 min	Time includes weighing and completion of can puncture (1.5 hrs).	B. Randall	
	Outputs				
	Other				

Table E.9 Open inner 3013 (oxide) and convenience Can

Assumption No.	Category	Assumption Description	Note	Owner	Source Document
	Inputs				
	Resources required	FP Can Cutter -1 2 Front End Ops		B. Randall	
	Task Duration	30 min		B. Randall	
	Outputs	Empty 3013 Outer Container			
	Other				

Table E.11 Open inner and convenience Can

Assumption No.	Category	Assumption Description	Note	Owner	Source Document
	Inputs	If there is trouble opening conv, can, then go here. This is assumed to occur 10% of the time. 90% of the time there is no trouble opening the cans.			
	Resources required	FP can cutter -1 2 Front End Ops		B. Randall	
	Task Duration	30 min		B. Randall	
	Outputs				
	Other				

Table E.12 Weigh material container

Assumption No.	Category	Assumption Description	Note	Owner	Source Document
	Inputs				
	Resources required	2 Front End Ops		B. Randall	
	Task Duration	5 min		B. Randall	
	Outputs				
	Other				

Logic for pin fuel pellets from Green Fuel into Feed Prep.

Table E.60 Check for lag storage position

Assumption No.	Category	Assumption Description	Note	Owner	Source Document
	Inputs		If not a recycled batch can from Mill/Mix, and if not transport can of oxide from Oxidation then is a pin fuel can. Pin Fuel Cans filled with Green Fuel from GFDS (Green fuel goes straight to weighing and then crusher).		
	Resources required				
	Task Duration				
	Outputs				
	Other	This function is to capture a storage position.			

Table E.27 Receive and bag in pin fuel can

Assumption No.	Category	Assumption Description	Note	Owner	Source Document
	Inputs				
	Resources required	2 Front End Ops		B. Randall	
	Task Duration	30 min		B. Randall	
	Outputs				
	Other				

Table E.28 Place pin fuel can in lag storage position

Assumption No.	Category	Assumption Description	Note	Owner	Source Document
	Inputs	Pin Fuel Can			
	Resources required	2 Front End Ops FP Lag Store Input Position - 1		B. Randall	
	Task Duration	10 min		B. Randall	
	Outputs				
	Other	6 lag storage positions to share between pin fuel cans and transport cans	Provide lag storage for 1 day processing (6 total lag storage positions) and lag storage for 1 day processing of empty batch cans.	B. Randall	X-SYD-K-00004

Table E.29 Lag Store pin fuel can

Assumption No.	Category	Assumption Description	Note	Owner	Source Document
	Inputs				
	Resources required	FP Lag Store Input Position - 1			
	Task Duration				
	Outputs				
	Other	The purpose of this function is to capture a lag storage position.			

Back to logic after weighing of material container.

Table E.46 Place dustless transfer device on can and dump to crusher

Assumption No.	Category	Assumption Description	Note	Owner	Source Document
	Inputs				
	Resources required	2 Front End Ops		B. Randall	
	Task Duration	15 min		B. Randall	
	Outputs				
	Other				

Table E.16 Crush oxide or green fuel pellets

Assumption No.	Category	Assumption Description	Note	Owner	Source Document
	Inputs	Crusher with oxide Crusher with fuel pellets			
	Resources required	FP Crusher - 1 2 Front End Ops		B. Randall	
	Task Duration	10 min		B. Randall	
	Outputs	Crusher with crushed oxide Crusher with crushed fuel pellets Empty 3013 Inner Container Empty Convenience can Empty pin fuel			
	Other	One 3013 (oxide) or pin fuel can produces approx. 2 batch cans.			

Table E.13 Weigh Empty Material container

Assumption No.	Category	Assumption Description	Note	Owner	Source Document
	Inputs				
	Resources required	2 Front End Ops		B. Randall	
	Task Duration	5 min		B. Randall	
	Outputs				
	Other				

Table E.14 Stage Out Empty container waste

Assumption No.	Category	Assumption Description	Note	Owner	Source Document
	Inputs				
	Resources required	2 Front End Ops		B. Randall	
	Task Duration	30 min		B. Randall	
	Outputs	TRU Waste			
	Other	Can do staging out while crusher is operating	Lag storage for empty containers, to not interrupt production.		X-SYD-K-00004

Table E.101 Test Activity to discard transactions (when indicated in red)

Assumption No.	Category	Assumption Description	Note	Owner	Source Document

Assumption No.	Category	Assumption Description	Note	Owner	Source Document
	Inputs				
	Resources required				
	Task Duration				
	Outputs				
	Other	This function is for modeling purposes only.			

Table E.15 Manage Waste

Assumption No.	Category	Assumption Description	Note	Owner	Source Document
	Inputs				
	Resources required				
	Task Duration				
	Outputs				
	Other	See logic for Waste Management.			

Table E.17 Split and Load Batch Cans

Assumption No.	Category	Assumption Description	Note	Owner	Source Document
	Inputs	Crusher with crushed oxide Crusher with crushed fuel pellets Empty Batch Cans from mixing and milling			
	Resources required	2 Front End Ops		B. Randall	
	Task Duration	10 min	10 min per can	B. Randall	
	Outputs	Loaded Batch Cans			
	Other	Assume that for modeling purposes, if batch cans are recycled, there is no need to model input of new batch cans. Assume Batch Cans are always available. Assume that the required # of BC will be introduced and if one is damaged (assumed to be rare) a replacement can be provided in a negligible amount of time with respect to long term operation of the facility/model. Batch can handling/transport times are accounted for elsewhere in the model.	Oxide into 2 Batch Cans at 2 kg per can. Remaining oxide into 3rd Batch Can to be loaded to 2 kg bulk maximum (butt can) (staged if <2 kg, do not sample.)	B. Smith	

Logic for Transport Can from Oxidation into Feed Prep.

Table E.61 Check for lag storage position

Assumption No.	Category	Assumption Description	Note	Owner	Source Document
	Inputs		If not a recycled batch can from Mill/Mix and if a transport can from Oxidation, the execute this logic		
	Resources required				
	Task Duration				
	Outputs				
	Other	This function is for modeling purposes only.			

Table E.30 Receive and Stage in Transport Can

Assumption No.	Category	Assumption Description	Note	Owner	Source Document
	Inputs	Transport Cans of Oxide from Oxidation			
	Resources required	2 Front End Ops		B. Randall	
	Task Duration	15 min		B. Randall	
	Outputs				
	Other				

Table E.31 Place transport can in lag storage

Assumption No.	Category	Assumption Description	Note	Owner	Source Document
	Inputs				
	Resources required	2 Front End Ops FP Lag Store Input Position - 1		B. Randall	
	Task Duration	10 min		B. Randall	
	Outputs				
	Other	6 lag storage positions shared between pin fuel cans and transport cans and loaded batch cans.		B. Randall	

Table E.32 Lag Store transport can

Assumption No.	Category	Assumption Description	Note	Owner	Source Document

Assumption No.	Category	Assumption Description	Note	Owner	Source Document
	Inputs				
	Resources required	FP Lag Store Input Position - 1			
	Task Duration				
	Outputs				
	Other	The purpose of this function is to capture a storage position.			

Table E.33 Weigh/Open Transport Can

Assumption No.	Category	Assumption Description	Note	Owner	Source Document
	Inputs				
	Resources required	2 Front End Ops		B. Randall	
	Task Duration	5 min		B. Randall	
	Outputs				
	Other				

Table E.34 Split Transport Can into Batch Can

Assumption No.	Category	Assumption Description	Note	Owner	Source Document
	Inputs	Empty Batch Can recycled from mix/mill			
	Resources required	2 Front End Ops		B. Randall	
	Task Duration	20 min	Time includes weighing BC and empty and splitting TC.	B. Randall	
	Outputs	Recycled Transport Can to Oxidation Loaded Batch Can			
	Other		TC emptied and split into 2 BC; 2 kg per Batch Can. Remainder of material in TC dumped into butt can that will be loaded to max. of 2 kg.		X-SYD-K-00004

Table E.37 Split Transport Can into Batch Can 2

Assumption No.	Category	Assumption Description	Note	Owner	Source Document
	Inputs	Empty Batch Can recycled from mix/mill			
	Resources required	2 Front End Ops		B. Randall	
	Task Duration	20 min	Time includes weighing BC.	B. Randall	
	Outputs	Recycled Transport Can to Oxidation Loaded Batch Can			
	Other		TC emptied and split into 2 BC; 2 kg per Batch Can. Remainder of material in TC dumped into butt can that will be loaded to max. of 2 kg.		X-SYD-K-00004

Table E.35 Stage Out Empty Transport Can

Assumption No.	Category	Assumption Description	Note	Owner	Source Document
	Inputs				
	Resources required	2 Front End Ops		B. Randall	
	Task Duration	10 min		B. Randall	
	Outputs	Recycled Transport Cans to Oxidation			
	Other				

Logic where Batch Can (from either oxide, pin fuel can, or DMO) is sampled.

Table E.19 Sample and Analyze Batch Can

Assumption No.	Category	Assumption Description	Note	Owner	Source Document
	Inputs		50% of time sample batch can; 50% of time do not sample batch can.		
	Resources required	2 Front End Ops LIBS - 1		B. Randall	
	Task Duration	30 min		B. Randall	
	Outputs				
	Other	Assume that frequency and time involved for handling unacceptable LIBS results is negligible in comparison to long term operations of facility/model.	Analysis conducted in-line within FPS.		

Table E.22 Weigh and load GIC

Assumption No.	Category	Assumption Description	Note	Owner	Source Document
	Inputs				
	Resources required	Feed Prep GIS - 1 2 Front End Ops		B. Randall	
	Task Duration	15 min		B. Randall	
	Outputs				
	Other				

Table E.23 Complete GIC measurements

Assumption No.	Category	Assumption Description	Note	Owner	Source Document
	Inputs				
	Resources required	Feed Prep GIS - 1		B. Randall	
	Task Duration	90 min	90 min for each GIC measurement	B. Randall	
	Outputs				
	Other				

Butt Can logic.

Table E.43 Load butt can

Assumption No.	Category	Assumption Description	Note	Owner	Source Document
	Inputs				
	Resources required	2 Front End Ops		B. Randall	
	Task Duration	30 min		B. Randall	
	Outputs				
	Other	1 Butt can generated every 2 days.			

Table E.44 Weigh and load GIC

Assumption No.	Category	Assumption Description	Note	Owner	Source Document
	Inputs				

Assumption No.	Category	Assumption Description	Note	Owner	Source Document
	Resources required	Feed Prep GIS - 1 2 Front End Ops		B. Randall	
	Task Duration	15 min		B. Randall	
	Outputs				
	Other		Rate to support throughput of oxide @ 25kg/24 hr		X-SYD-K-00004

Table E.24 Place in-process batch cans in lag storage

Assumption No.	Category	Assumption Description	Note	Owner	Source Document
	Inputs				
	Resources required	2 Front End Ops FP Lag Batch Can Store Position - 1		B. Randall	
	Task Duration	10 min		B. Randall	
	Outputs				
	Other	10 storage positions for 2 kg Batch Cans	Safe lag storage for 10 loaded batch cans prior to transfer to milling and mixing system.	B. Randall	

Table E.25 Lag Store in-process batch cans

Assumption No.	Category	Assumption Description	Note	Owner	Source Document
	Inputs				
	Resources required	FP Lag Batch Can Store Position - 1			
	Task Duration				
	Outputs				
	Other	10 storage positions for 2 kg Batch Cans The purpose of this function is to capture a storage position.		B. Randall	

Table E.26 Stage Out Loaded Batch Can

Assumption No.	Category	Assumption Description	Note	Owner	Source Document
	Inputs				
	Resources required	2 Front End Ops		B. Randall	
	Task Duration	10 min		B. Randall	
	Outputs	Batch Cans of Oxide to Milling/Mixing			
	Other				

Table E.100 Test activity to discard transaction (when indicated in red)

Assumption No.	Category	Assumption Description	Note	Owner	Source Document
	Inputs				
	Resources required				
	Task Duration				
	Outputs				
	Other	This function is for modeling purposes only.			

Recycled Batch Can from Milling and Mixing Logic.

Table E.38 Stage In Empty Batch Can

Assumption No.	Category	Assumption Description	Note	Owner	Source Document
	Inputs	Empty Batch Cans from mixing and milling			
	Resources required	2 Front End Ops		B. Randall	
	Task Duration	15 min	For all 10 Batch Cans.	B. Randall	
	Outputs				
	Other	Done daily.			

Table E.39 Weigh Empty Batch Can

Assumption No.	Category	Assumption Description	Note	Owner	Source Document
	Inputs				

Assumption No.	Category	Assumption Description	Note	Owner	Source Document
	Resources required	2 Front End Ops			
	Task Duration	5 min			
	Outputs				
	Other				

Table E.40 Lag store empty batch can

Assumption No.	Category	Assumption Description	Note	Owner	Source Document
	Inputs				
	Resources required				
	Task Duration				
	Outputs				
	Other	This function is used as a logic place holder.			

Table E.41 Use Batch Can

Assumption No.	Category	Assumption Description	Note	Owner	Source Document
	Inputs				
	Resources required				
	Task Duration				
	Outputs				
	Other	This function is used a logic place holder.			

APPENDIX F -

Milling and Mixing System Assumptions

Table F.5 Batch can transported to attritor

Assumption No.	Category	Assumption Description	Note	Owner	Source Document
	Inputs		If not a recycled transport hopper, then come here.		
	Resources required				
	Task Duration				
	Outputs				
	Other		See the A.10, "Transfer batch can to Mill/Mix, dock at attritor", activity on the "Pu Vit Top Level" process flow for duration and resources for the transfer from Feed Prep to Mill and Mix.		

Table F.6 Load attritor mill with oxide

Assumption No.	Category	Assumption Description	Note	Owner	Source Document
	Inputs				
	Resources required	MM Attritor Mill -1 MM Ops - 1		D. Fisher B. Smith	
	Task Duration	2 min		D. Fisher B. Smith	
	Outputs				
	Other		The mixer can only process one batch can at a time.		X-SYD-K-00005

Table F.7 Add frit to attritor mill/ check neutron rate

Assumption No.	Category	Assumption Description	Note	Owner	Source Document
	Inputs	Bulk Glass Frit (18 kg Frit)			
	Resources required	MM Attritor Mill - 1 MM Ops – 1 MM Bulk Frit Hopper – 1 MM Neutron Probe1- 1		D. Fisher B. Smith	

Assumption No.	Category	Assumption Description	Note	Owner	Source Document
	Task Duration	5 min		D. Fisher B. Smith	
	Outputs				
	Other	Assume no additive feeder.	Add 18 kg LaBs frit to Pu Oxide Feed		X-SYD-K-00005

Table F.13 Recycle batch can to Feed Prep

Assumption No.	Category	Assumption Description	Note	Owner	Source Document
	Inputs				
	Resources required				
	Task Duration				
	Outputs				
	Other	See top level function A.14 "Transfer Batch Can to Feed Prep."	Assume that batch can weight can be taken back in Feed Prep when batch can is returned.	D. Fisher B. Smith	

Table F.8 Mix frit and oxide

Assumption No.	Category	Assumption Description	Note	Owner	Source Document
	Inputs				
	Resources required	MM Attritor Mill – 1 MM Ops - 1		D. Fisher B. Smith	
	Task Duration	5 min		D. Fisher B. Smith	
	Outputs				
	Other		Milling/mixing apparatus can process batch of min weight of 20 kg. 2 kg bulk + 18 kg of frit = 20 kg bulk		X-SYD-K-00005

Table F.9 Load Transport Hopper

Assumption No.	Category	Assumption Description	Note	Owner	Source Document
	Inputs	Empty Transport Hopper from VIT			
	Resources required	MM Attritor Mill – 1 MM Ops - 1		D. Fisher B. Smith	

Assumption No.	Category	Assumption Description	Note	Owner	Source Document
	Task Duration	10 min		D. Fisher B. Smith	
	Outputs	Loaded Transport Hopper			
	Other		Resultant powder discharged in two10 kg batches. Collect entire contents of milling/mixing apparatus plus added collection volume of 25%. Each melter feed batch shall weigh 10 kg. Collection hopper emptied into 2 transport hoppers at a batch size of 10 kg per Transport Hopper.		X-SYD-K-00005

Table F.10 Weigh Loaded Transport Hopper

Assumption No.	Category	Assumption Description	Note	Owner	Source Document
	Inputs				
	Resources required	MM Ops – 1 MM Neutron Probe2- 1		D. Fisher B. Smith	
	Task Duration	15 min	15 minutes includes the 8 minute transfer time identified by Mike Petrella (per Time & Motion Model Input, hard copy dated 8/1/06).	D. Fisher B. Smith M. Petrella	
	Outputs				
	Other				

Table F.23 Complete GIS measurement

Assumption No.	Category	Assumption Description	Note	Owner	Source Document
	Inputs				
	Resources required	MM Ops – 1 MM GIS - 1		D. Fisher B. Smith	
	Task Duration	15 min		D. Fisher B. Smith	
	Outputs				
	Other				

Table F.11 Transfer loaded hopper to Vit

Assumption No.	Category	Assumption Description	Note	Owner	Source Document
	Inputs				
	Resources required				
	Task Duration				
	Outputs				
	Other		See "Pu Vit Top Level" for resources and duration of hopper transport to Vit.		

Table F.100 Test Activity to discard transactions

Assumption No.	Category	Assumption Description	Note	Owner	Source Document
	Inputs				
	Resources required				
	Task Duration				
	Outputs				
	Other	This function is for modeling purposes only.			

Table F.12 Measure holdup in attritor

Assumption No.	Category	Assumption Description	Note	Owner	Source Document
	Inputs				
	Resources required	MM Attritor Mill - 1 MM Ops – 1 MM Gamma Monitor - 1		D. Fisher B. Smith	
	Task Duration	15 min		D. Fisher B. Smith	
	Outputs				
	Other	Assume results are okay.			

Recycle Transport Hopper Logic.

Table F.2 Receive transport hopper

Assumption No.	Category	Assumption Description	Note	Owner	Source Document
	Inputs				
	Resources required	MM Ops - 1		D. Fisher B. Smith	
	Task Duration	5 min		D. Fisher B. Smith	
	Outputs				
	Other	Assume for modeling purposes, if Transport Hoppers are recycled, there is no need to model input of new Transport Hoppers.	Receive and handle min of 20 transport hoppers recycled back from Vit each 24 hr period.	Bob Smith	X-SYD-K-00005

Table F.3 Weigh empty transport hopper

Assumption No.	Category	Assumption Description	Note	Owner	Source Document
	Inputs				
	Resources required	MM Ops - 1		D. Fisher B. Smith	
	Task Duration	5 min		D. Fisher B. Smith	
	Outputs				
	Other				

Table F.4 Position hopper for loading

Assumption No.	Category	Assumption Description	Note	Owner	Source Document
	Inputs				
	Resources required	MM Ops - 1		D. Fisher B. Smith	
	Task Duration	5 min		D. Fisher B. Smith	
	Outputs				
	Other				

Logic for Bulk frit hopper loading

Table F.17 Load bulk frit hopper

Assumption No.	Category	Assumption Description	Note	Owner	Source Document
	Inputs				
	Resources required	MM Ops – 1 MM Bulk Frit Hopper - 1		D. Fisher B. Smith	
	Task Duration	2 hr		D. Fisher B. Smith	
	Outputs				
	Other	Loading of bulk frit hopper is assumed to occur once per week. Set for Wednesday on back shift at 10:30 p.m.			

APPENDIX G -

Vitrification System Assumptions

Table G.1 Loaded hopper transported from Mill/mix

Assumption No.	Category	Assumption Description	Note	Owner	Source Document
	Inputs				
	Resources required				
	Task Duration				
	Outputs				
	Other		See the A.15, "Transfer hopper to Vit, dock at melter", activity on "Pu Vit Top Level" process flow for duration and resources for the transfer from Mill & Mix to Vit.		

Table G.2 Position empty vit can to receive glass

Assumption No.	Category	Assumption Description	Note	Owner	Source Document
	Inputs	Empty vit can			
	Resources required	Vit Melter - 1 Vit Ops - 1		D. Fisher B. Smith	
	Task Duration	5 min		D. Fisher B. Smith	
	Outputs				
	Other				

Table G.3 Load Melter

Assumption No.	Category	Assumption Description	Note	Owner	Source Document
	Inputs				
	Resources required	Vit Melter - 1 Vit Ops - 1		D. Fisher B. Smith	
	Task Duration	5 min		D. Fisher	

Assumption No.	Category	Assumption Description	Note	Owner	Source Document
				B. Smith	
	Outputs				
	Other				

Table G.4 Melt

Assumption No.	Category	Assumption Description	Note	Owner	Source Document
	Inputs				
	Resources required	Vit Melter - 1		D. Fisher B. Smith	
	Task Duration	2 hrs		D. Fisher B. Smith	
	Outputs				
	Other		Temp. is 1500 C		X-SYD-K-00006

Table G.12 Recycle transport hopper to Mix/mill

Assumption No.	Category	Assumption Description	Note	Owner	Source Document
	Inputs				
	Resources required				
	Task Duration				
	Outputs				
	Other		See A.18 “Recycle transport hopper to Mill/Mix” on “Pu Vit Top Level” diagram.		

Table G.101 Test Activity to discard transactions (when indicated in red)

Assumption No.	Category	Assumption Description	Note	Owner	Source Document
	Inputs				
	Resources required				
	Task Duration				
	Outputs				

Assumption No.	Category	Assumption Description	Note	Owner	Source Document
	Other	This function is for modeling purposes only.			

Table G.5 Pour/ discharge glass

Assumption No.	Category	Assumption Description	Note	Owner	Source Document
	Inputs				
	Resources required	Vit Melter – 1 Vit Ops - 1		D. Fisher B. Smith	
	Task Duration	30 min	Based on melter run information provided by Tim Jones to D. Fisher, discharging glass takes longer than previously thought. Based on Tim's number and allowing for more glass (10 kg rather than 6), please change the Pour Glass duration to 30 minutes.	D. Fisher B. Smith	
	Outputs				
	Other				

Table G.11 Cool Melter

Assumption No.	Category	Assumption Description	Note	Owner	Source Document
	Inputs				
	Resources required	Vit Melter - 1		D. Fisher B. Smith	
	Task Duration	9.25 hr		D. Fisher B. Smith	
	Outputs				
	Other				

Table G.6 Cool Vit Can prior to moving

Assumption No.	Category	Assumption Description	Note	Owner	Source Document
	Inputs				
	Resources required				
	Task Duration	1 hr		D. Fisher	

Assumption No.	Category	Assumption Description	Note	Owner	Source Document
				B. Smith	
	Outputs				
	Other				

Table G.7 Move vit can for continued cooling

Assumption No.	Category	Assumption Description	Note	Owner	Source Document
	Inputs				
	Resources required	Vit Ops - 1		D. Fisher B. Smith	
	Task Duration	5 min	- The vit can is then moved to a transport cart or pallet. Pallet then travels approximately 90 ft horizontally to a temporary lag storage/final cooling area = ~ 5 min.	D. Fisher B. Smith	
	Outputs				
	Other				

Table G.8 Continue to cool vit can

Assumption No.	Category	Assumption Description	Note	Owner	Source Document
	Inputs				
	Resources required				
	Task Duration	4 hrs		D. Fisher B. Smith	
	Outputs				
	Other				

Table G.9 Move for transport to Bagless

Assumption No.	Category	Assumption Description	Note	Owner	Source Document
	Inputs				
	Resources required	Vit Ops - 1		D. Fisher B. Smith	

Assumption No.	Category	Assumption Description	Note	Owner	Source Document
	Task Duration	25 min		D. Fisher B. Smith	
	Outputs				
	Other				

Table G.10 Transfer vit can to Bagless

Assumption No.	Category	Assumption Description	Note	Owner	Source Document
	Inputs				
	Resources required				
	Task Duration				
	Outputs				
	Other		See the A.19, "Transfer vit can to Bagless", activity on the Pu Vit Top level process flow for duration and resources for the transfer from Vit to Bagless.		

Table G.100 Test Activity to discard transactions (when indicated in red)

Assumption No.	Category	Assumption Description	Note	Owner	Source Document
	Inputs				
	Resources required				
	Task Duration				
	Outputs				
	Other	This function is for modeling purposes only.			

Logic to Account for empty vit can loading time

Table G.14 Receive vit cans from warehouse

Assumption No.	Category	Assumption Description	Note	Owner	Source Document
	Inputs	Empty Vit Can from Non-Nuclear Material Storage and Staging	20 received at a time. Done once per day.		
	Resources required	Vit Ops - 2		D. Fisher	

Assumption No.	Category	Assumption Description	Note	Owner	Source Document
				B. Smith D. Fisher B. Smith	
	Task Duration	15 min			
	Outputs				
	Other				

Table G.15 Stage in empty vit cans

Assumption No.	Category	Assumption Description	Note	Owner	Source Document
	Inputs				
	Resources required	Vit Ops – 2 Conveyor D - 1		D. Fisher B. Smith	
	Task Duration	30 min	Total of 30 min for 20 cans to go into GB.	D. Fisher B. Smith	
	Outputs				
	Other	Assume vit cans are loaded near bagless GB.			

APPENDIX H -

Bagless Transfer System Assumptions

Table H.1 Vit can received from Vit

Assumption No.	Category	Assumption Description	Note	Owner	Source Document
	Inputs	Filled Vit cans (from VIT)	If not a shielded bagless cart, then come here.		
	Resources required				
	Task Duration				
	Outputs				
	Other		See A.19 “Transfer Vit can to Bagless” in “Pu Vit Top Level” diagram.		

Table H.2 Load and weld bagless can

Assumption No.	Category	Assumption Description	Note	Owner	Source Document
	Inputs	Empty BTC			
	Resources required	Bagless Transfer Unit - 1 BT Ops - 2		B. Smith K. Oldfield	
	Task Duration	2 hr		B. Smith K. Oldfield	
	Outputs	Filled BTC Waste to Waste Management.	2 caps/pail 10 pails generated	B. Smith	
	Other				

Table H.3 Collect stub waste

Assumption No.	Category	Assumption Description	Note	Owner	Source Document
	Inputs				
	Resources required				
	Task Duration				
	Outputs				

Assumption No.	Category	Assumption Description	Note	Owner	Source Document
	Other	This function serves as a place holder in model logic.			

Table H.4 Bag out waste

Assumption No.	Category	Assumption Description	Note	Owner	Source Document
	Inputs				
	Resources required	BT Ops - 2		B. Smith K. Oldfield	
	Task Duration	30 min		B. Smith K. Oldfield	
	Outputs				
	Other				

Table H.5 Place bags in pail for transfer to waste

Assumption No.	Category	Assumption Description	Note	Owner	Source Document
	Inputs				
	Resources required	BT Ops - 2		B. Smith K. Oldfield	
	Task Duration	10 min		B. Smith K. Oldfield	
	Outputs				
	Other				

Table H.100 Test Activity to discard transactions

Assumption No.	Category	Assumption Description	Note	Owner	Source Document
	Inputs				
	Resources required				
	Task Duration				
	Outputs				
	Other	This function is for modeling purposes only.			

Table H.25 Manage Waste

Assumption No.	Category	Assumption Description	Note	Owner	Source Document
	Inputs				
	Resources required				
	Task Duration				
	Outputs				
	Other	See logic for Waste Management.			

Table H.6 Contamination/ leak check

Assumption No.	Category	Assumption Description	Note	Owner	Source Document
	Inputs				
	Resources required	BT Ops - 2 BT Leak Check Station - 1		B. Smith K. Oldfield	
	Task Duration	1 hr		B. Smith K. Oldfield	
	Outputs				
	Other				

Table H.8 Transfer failed bagless can to GB

Assumption No.	Category	Assumption Description	Note	Owner	Source Document
	Inputs	If leak check failed. This is assumed to occur 0.1% of the time.			
	Resources required	BT Ops - 2		B. Smith K. Oldfield	
	Task Duration	30 min		B. Smith K. Oldfield	
	Outputs				
	Other				

Table H.9 Cut failed bagless can

Assumption No.	Category	Assumption Description	Note	Owner	Source Document
	Inputs				
	Resources required	BT Can Cutter – 1 BT Ops - 2		B. Smith K. Oldfield	
	Task Duration	45 min	Time accounts for the same time as opening the inner 3013 and conv. can in Oxid (30 min) plus an additional 15 min allowance for remote operations.	B. Smith K. Oldfield	
	Outputs				
	Other				

Table H.10 Remove vit can and transfer to bagless unit for recycle

Assumption No.	Category	Assumption Description	Note	Owner	Source Document
	Inputs				
	Resources required	BT Ops - 2		B. Smith K. Oldfield	
	Task Duration	15 min		B. Smith K. Oldfield	
	Outputs	Recycle vit can to receive vit can			
	Other				

Table H.11 Bag out failed bagless can

Assumption No.	Category	Assumption Description	Note	Owner	Source Document
	Inputs				
	Resources required	BT Ops - 2		B. Smith K. Oldfield	
	Task Duration	30 min		B. Smith K. Oldfield	
	Outputs	TRU Waste			
	Other				

Table H.12 Place bag in pail for transfer to waste

Assumption No.	Category	Assumption Description	Note	Owner	Source Document
	Inputs				
	Resources required	BT Ops - 2		B. Smith K. Oldfield	
	Task Duration	5 min		B. Smith K. Oldfield	
	Outputs	TRU Waste			
	Other				

Table H.101 Test Activity to discard transactions

Assumption No.	Category	Assumption Description	Note	Owner	Source Document
	Inputs				
	Resources required				
	Task Duration				
	Outputs				
	Other	This function is for modeling purposes only.			

Table H.26 Manage Waste

Assumption No.	Category	Assumption Description	Note	Owner	Source Document
	Inputs				
	Resources required				
	Task Duration				
	Outputs				
	Other	See logic for Waste Management.			

Logic for if leak check passed.

Table H.13 Move to lag storage position

Assumption No.	Category	Assumption Description	Note	Owner	Source Document

Assumption No.	Category	Assumption Description	Note	Owner	Source Document
	Inputs	Come here if leak check passed. This is assumed to occur 99.9% of the time.			
	Resources required	BT Ops - 2		B. Smith K. Oldfield	
	Task Duration	5 min		B. Smith K. Oldfield	
	Outputs				
	Other				

Table H.14 Lag store bagless can

Assumption No.	Category	Assumption Description	Note	Owner	Source Document
	Inputs				
	Resources required	BT Load Bagless Lag Store Position -1			
	Task Duration				
	Outputs				
	Other	Assume 6 positions for lag storage. This function purpose is to capture a storage position.			

Table H.15 Transfer bagless can to NDA instrument

Assumption No.	Category	Assumption Description	Note	Owner	Source Document
	Inputs				
	Resources required	BT Ops - 2 BT NDA Overhead crane – 1 Conveyor E - 1		B. Smith K. Oldfield	
	Task Duration	5 min	A robotic manipulator removes the BTC from inspection area and places it on the transport system. The system then elevates the can 11ft to an overhead transport, travels approximately 46 ft through the adjoining wall into the NDA room, then lowers the can 10 ft to a retrieval station = ~ 3 min. The can is then transferred to one of the pieces of NDA equipment for measurement = ~ 2 min. The 5 minutes include placing the bagless can in the	M. Petrella	

Assumption No.	Category	Assumption Description	Note	Owner	Source Document
			NDA instrument.		
	Outputs	BTC to Lag storage			
	Other				

Table H.30 Run "baseline" calorimeter measurement

Assumption No.	Category	Assumption Description	Note	Owner	Source Document
	Inputs	Assume 16.67% of time a baseline is needed. Then go here. Assuming, after a baseline and standard are run, the calorimeter is good for 5 measurements before another baseline is needed.		B. Smith	
	Resources required	BT Calorimeter - 1		B. Smith	
	Task Duration	8 hrs		B. Smith	
	Outputs				
	Other				

\Table H.16 Load Calorimeter

Assumption No.	Category	Assumption Description	Note	Owner	Source Document
	Inputs				
	Resources required	BT Calorimeter - 1 NDA Out Ops - 2 BT NDA Overhead Crane - 1		B. Smith	
	Task Duration	35 min		B. Smith	
	Outputs				
	Other				

Table H.28 Run calorimeter

Assumption No.	Category	Assumption Description	Note	Owner	Source Document
	Inputs				
	Resources required	BT Calorimeter - 1		B. Smith	

Assumption No.	Category	Assumption Description	Note	Owner	Source Document
	Task Duration	8 hr		B. Smith	
	Outputs				
	Other				

Table H.29 Unload Calorimeter

Assumption No.	Category	Assumption Description	Note	Owner	Source Document
	Inputs				
	Resources required	BT Calorimeter - 1 NDA Out Ops - 2 BT NDA Overhead Crane - 1		B. Smith	
	Task Duration	30 min		B. Smith	
	Outputs				
	Other				

Table H.33 Run calorimeter standard

Assumption No.	Category	Assumption Description	Note	Owner	Source Document
	Inputs		Done every 5 measurements.		
	Resources required	BT Calorimeter - 1		B. Smith	
	Task Duration	8 hr		B. Smith	
	Outputs				
	Other				

Table H.35 Re-run calorimeter standard

Assumption No.	Category	Assumption Description	Note	Owner	Source Document
	Inputs	1% of time the standard must be re-run.			
	Resources required	BT Calorimeter - 1		B. Smith	

Assumption No.	Category	Assumption Description	Note	Owner	Source Document
	Task Duration	8 hr		B. Smith	
	Outputs				
	Other				

Table H.56 Unload standard

Assumption No.	Category	Assumption Description	Note	Owner	Source Document
	Inputs		Come here if do not have to do standard re-run.		
	Resources required	BT Calorimeter - 1 NDA Out Ops - 2		B. Smith	
	Task Duration	30 min			
	Outputs				
	Other				

Table H.17 Transfer to GIS

Assumption No.	Category	Assumption Description	Note	Owner	Source Document
	Inputs				
	Resources required	BT NDA Overhead Crane – 1 NDA Out Ops - 2		B. Smith	
	Task Duration	5 min			
	Outputs				
	Other				

Table H.18 Complete GIS measurement

Assumption No.	Category	Assumption Description	Note	Owner	Source Document
	Inputs				
	Resources required	BT GIS – 1 NDA Out Ops - 2			
	Task Duration	60 min			
	Outputs				

Assumption No.	Category	Assumption Description	Note	Owner	Source Document
	Other	Assuming dewars can be filled approximately once every two weeks with out disrupting calorimetry measurements in progress.			

Table H.19 Transfer bagless can to bagless transfer cart

Assumption No.	Category	Assumption Description	Note	Owner	Source Document
	Inputs	Filled Bagless Transfer Cans			
	Resources required	Shielded transfer cart – 1 BT NDA Overhead bridge crane - 1 NDA Out Ops - 2		B. Smith	
	Task Duration	5 min	5 minutes per transfer is based on meeting with Bob Smith and Kraig Oldfield. 5 minutes per transfer (total of 20 minutes for 4 bagless cans into shielded cart) conflicts with the Mike Petrella input of 10 minutes for loading shielded cart with 4 cans. 20 minutes was more conservative and was used as a result.	B. Smith K. Oldfield	
	Outputs				
	Other	Transfer Cart holds 4 Bagless Transfer Cans			

Table H.20 Stage transfer cart until loaded

Assumption No.	Category	Assumption Description	Note	Owner	Source Document
	Inputs				
	Resources required	Shielded Bagless cart – 1		B. Smith	
	Task Duration				
	Outputs				
	Other	Transfer Cart holds 4 Bagless Transfer Cans. This function serves as a place holder for model logic.			

Table H.21 Transfer to bagless can storage area

Assumption No.	Category	Assumption Description	Note	Owner	Source Document
	Inputs				

Assumption No.	Category	Assumption Description	Note	Owner	Source Document
	Resources required	NDA Out Oper – 2 Shielded Bagless Cart – 1 Mechanical lift -1 Elevator – 1			
	Task Duration	15 min			
	Outputs				
	Other				

Table H.103 counter

Assumption No.	Category	Assumption Description	Note	Owner	Source Document
	Inputs				
	Resources required				
	Task Duration				
	Outputs				
	Other	This function is for modeling purposes only.			

Table H.102 Test activity to discard transactions

Assumption No.	Category	Assumption Description	Note	Owner	Source Document
	Inputs				
	Resources required				
	Task Duration				
	Outputs				
	Other	This function is for modeling purposes only.			

Logic for Empty bagless can loading

Table H.23 Receive bagless cans from warehouse

Assumption No.	Category	Assumption Description	Note	Owner	Source Document
	Inputs				
	Resources required	BT Ops - 2		B. Smith	

Assumption No.	Category	Assumption Description	Note	Owner	Source Document
	Task Duration	15 min		B. Smith	
	Outputs				
	Other	Assume done once per day. 20 at a time.			

Table H.24 Stage in empty bagless cans

Assumption No.	Category	Assumption Description	Note	Owner	Source Document
	Inputs				
	Resources required	BT Ops - 2		B. Smith	
	Task Duration	30 min		B. Smith	
	Outputs				
	Other				

Logic to position bagless transfer cart for loading.

Table H.42 Position shielded bagless cart for loading

Assumption No.	Category	Assumption Description	Note	Owner	Source Document
	Inputs				
	Resources required	Shielded Bagless Cart – 1 1 NDA Out Ops		B. Smith	
	Task Duration	5 min		B. Smith	
	Outputs				
	Other				

APPENDIX I -

Magazine Loading and Storage System Assumptions

Table I.29 Batch cans

Assumption No.	Category	Assumption Description	Note	Owner	Source Document
	Inputs				
	Resources required				
	Task Duration				
	Outputs				
	Other	This function is for modeling purposes only.			

Table I.30 Check for loaded bagless can storage positions

Assumption No.	Category	Assumption Description	Note	Owner	Source Document
	Inputs				
	Resources required				
	Task Duration				
	Outputs				
	Other	The purpose of this function is to capture a storage position.			

Table I.1. Receive/Unload Bagless Cans

Assumption No.	Category	Assumption Description	Note	Owner	Source Document
	Inputs	4 Filled BTC from BTS on Shielded Cart			
	Resources required	Shielded Bagless Cart -1 MLS Remote Handler – 1 (moves BTC on -14) 1 CRO	MLS Remote Handler moves BTC on -14	L. Milton B. Smith	
	Task Duration	30 min	4 BTC per cart, moved individually with remote handler. Duration is to move all 4 BTC.	L. Milton B. Smith	
	Outputs	Empty Transfer Cart			
	Other	Assume Bagless Transfer Cans received as a batched transaction. Time here is for unloading 4 cans total. The actual operation will be performed on BTC at a time.	Transactions are batched at activity I.29 to represent receiving 4 bagless cans in the shielded transfer cart. Time here is for unloading 4 cans total. The	L. Milton B. Smith	

Assumption No.	Category	Assumption Description	Note	Owner	Source Document
			actual operation will be performed one bagless can at a time.		

Table I.15 Return Shielded Transfer Cart

Assumption No.	Category	Assumption Description	Note	Owner	Source Document
	Inputs				
	Resources required				
	Task Duration				
	Outputs				
	Other	Note: the transactions are joined at the upper level to account for 1 shielded transfer cart return for each 4 bagless cans delivered to mag loading.	See "Pu Vit Top Level" for resources and duration involved in the shielded transfer cart return.		

Table I.2 Unbatch bagless cans

Assumption No.	Category	Assumption Description	Note	Owner	Source Document
	Inputs				
	Resources required				
	Task Duration				
	Outputs				
	Other	Function serves as a place holder in model logic.			

Table I.3 Interim Store Bagless Cans

Assumption No.	Category	Assumption Description	Note	Owner	Source Document
	Inputs	Filled BTC			
	Resources required	Load Bag Can Store Position - 1			
	Task Duration				
	Outputs				
	Other	880 Storage positions. Assume BTC goes through storage on -14 before going to 0. The purpose of this function is to capture a storage position.		Larry Milton	

Table I.31 Check for loaded bagless can lag storage positions

Assumption No.	Category	Assumption Description	Note	Owner	Source Document
	Inputs				
	Resources required				
	Task Duration				
	Outputs				
	Other	The purpose of this function is to capture a storage position.			

Table I.4 Transfer bagless cans to dumbwaiter

Assumption No.	Category	Assumption Description	Note	Owner	Source Document
	Inputs	1 BTC			
	Resources required	MLS Remote Handler - 1 1 CRO		L. Milton B. Smith	
	Task Duration	5 min/ can (4 cans total)	Each BTC is transferred at a time. Each can takes 5 min. So for 4 BTC, the total transfer time is 20 min.	L. Milton B. Smith	
	Outputs	BTC on dumbwaiter			
	Other				

Table I.5 Transfer bagless cans to 0' from interim storage

Assumption No.	Category	Assumption Description	Note	Owner	Source Document
	Inputs	1 BTC			
	Resources required	MLS Dumbwaiter -1 1 CRO		L. Milton B. Smith	
	Task Duration	5 min	Assume transfer is within sub-MBA and does not include the 30 min MC&A transfer time noted by Bill Randall at 8/3/06 meeting. Input from M. Petrella indicated 1 min transfer time in dumbwaiter, rounded up to 5 min here.	M. Petrella	
	Outputs				
	Other	Transfers one at a time.			

Table I.6 Place bagless cans in lag storage

Assumption No.	Category	Assumption Description	Note	Owner	Source Document
	Inputs	1 BTC			
	Resources required	MLS Bridge Robot - 1 1 CRO Load Bag Can Lag Store Position (+) 1		L. Milton B. Smith	
	Task Duration	5 min/ can (4 cans total)		L. Milton B. Smith	
	Outputs				
	Other	32 positions in Lag Storage of BTC on level 0’			M-SYD-K-00002

Table I.7 Lag store bagless cans

Assumption No.	Category	Assumption Description	Note	Owner	Source Document
	Inputs				
	Resources required	Load Bag Can Lag Store Position (-) 1			
	Task Duration				
	Outputs				
	Other	The purpose of this function is to capture a storage position.			

Table I.8 Batch bagless cans for mag loading

Assumption No.	Category	Assumption Description	Note	Owner	Source Document
	Inputs				
	Resources required				
	Task Duration				
	Outputs				
	Other	This function serves as a place holder in model logic.			

Table I.9 Position empty magazine for loading

Assumption No.	Category	Assumption Description	Note	Owner	Source Document

Assumption No.	Category	Assumption Description	Note	Owner	Source Document
	Inputs	1 Empty Magazine			
	Resources required	MLS Bridge Robot – 1 1 CRO MLS Magazine Loader - 1		L. Milton B. Smith	
	Task Duration	15 min	Includes time for positioning magazine loader in the vertical position, reading the bar code on the empty mag., and returning the mag. loader to the horizontal position after empty mag. loading.	L. Milton B. Smith	
	Outputs				
	Other				

Table I.10 Transfer bagless cans to magazine loader

Assumption No.	Category	Assumption Description	Note	Owner	Source Document
	Inputs	BTC (from Lag Storage)			
	Resources required	MLS Bridge Robot - 1 MLS Magazine Loader - 1 1 CRO		L. Milton B. Smith	
	Task Duration	20 min (5 min for each BTC)		L. Milton B. Smith	
	Outputs				
	Other				

Table I.11 Load Magazine and Cap

Assumption No.	Category	Assumption Description	Note	Owner	Source Document
	Inputs	(4) BTC, (1) Empty Magazine			
	Resources required	MLS Magazine Loader -1 1 CRO		L. Milton B. Smith	
	Task Duration	15 min		L. Milton B. Smith	
	Outputs	Loaded Magazine (from magazine loader)			
	Other	7 magazines are loaded to fill each DWPF canister. Pick and choose bagless based on Pu loading and canister loading.		L. Milton B. Smith	

Table I.12 Inspect Magazines

Assumption No.	Category	Assumption Description	Note	Owner	Source Document
	Inputs	Loaded Magazines			
	Resources required	MLS Bridge Robot - 1 1 CRO MLS Magazine Loader - 1		L. Milton B. Smith	
	Task Duration	5 min		L. Milton B. Smith	
	Outputs				
	Other	Inspection in vertical position Per 7/27/06 meeting with L. Milton and B. Smith, assume that frequency and likelihood of a loaded mag. not passing the visual inspection does not warrant modeling at this stage of the project/model.		L. Milton B. Smith	

Table I.13 Transfer loaded magazine to storage

Assumption No.	Category	Assumption Description	Note	Owner	Source Document
	Inputs	Loaded Magazines			
	Resources required	MLS Bridge Robot - 1 1 CRO		L. Milton B. Smith	
	Task Duration	15 min		L. Milton B. Smith	
	Outputs				
	Other	Up to 180 magazines.	Once have 7 magazines then ready to load into DWPF canister.		M-SYD-K-00002

Table I.14 Store loaded magazine

Assumption No.	Category	Assumption Description	Note	Owner	Source Document
	Inputs				
	Resources required	Load Mag Store Position - 1			
	Task Duration				

Assumption No.	Category	Assumption Description	Note	Owner	Source Document
	Outputs				
	Other	Storage for 180 loaded magazines.			

Table I.100 test activity to discard transactions

Assumption No.	Category	Assumption Description	Note	Owner	Source Document
	Inputs				
	Resources required				
	Task Duration				
	Outputs				
	Other	This function is for modeling purposes only.			

Logic for Empty Magazine loading time.

Table I.17 Batch empty magazine transactions

Assumption No.	Category	Assumption Description	Note	Owner	Source Document
	Inputs	Empty Magazines			
	Resources required				
	Task Duration				
	Outputs				
	Other	This function serves as a place holder in model logic.			

Table I.18 Planning meeting

Assumption No.	Category	Assumption Description	Note	Owner	Source Document
	Inputs				
	Resources required	1 CRO		L. Milton B. Smith	
	Task Duration	15 min		L. Milton B. Smith	

Assumption No.	Category	Assumption Description	Note	Owner	Source Document
	Outputs				
	Other				

Table I.19 Place empty magazines in lag storage

Assumption No.	Category	Assumption Description	Note	Owner	Source Document
	Inputs				
	Resources required	Purification Wing Bridge Crane - 1 1 CRO		L. Milton B. Smith	
	Task Duration	15 min		L. Milton B. Smith	
	Outputs				
	Other	Assume 1 week supply of empty magazines, delivered to storage for use. Store 35 magazines/week. 35 magazines are in a single rack. Assume empty magazines are brought in once per week.		Larry Milton	

Table I.20 Lag Store Empty Magazines

Assumption No.	Category	Assumption Description	Note	Owner	Source Document
	Inputs				
	Resources required	Empty Mag Store Position - 1			
	Task Duration				
	Outputs				
	Other	One storage position for 1 rack (which holds 35 magazines) The purpose of this function is to capture a storage position.		Larry Milton	

APPENDIX J -

Canister Loading System Assumptions

Table J.1 Batch loaded magazines

Assumption No.	Category	Assumption Description	Note	Owner	Source Document
	Inputs				
	Resources required				
	Task Duration				
	Outputs				
	Other	This function serves as a place holder in model logic.			

Table J.2 Move empty canister into position

Assumption No.	Category	Assumption Description	Note	Owner	Source Document
	Inputs	(1) Empty modified DWPF Canister			
	Resources required	Purification Wing Bridge Crane - 1 1 CRO		L. Milton B. Smith	
	Task Duration	10 minutes		L. Milton B. Smith	
	Outputs				
	Other	Assume that crane is inside and bad weather will not affect unloading/moving of canister		L. Milton B. Smith	

Table J.3 Load Magazines into Canister

Assumption No.	Category	Assumption Description	Note	Owner	Source Document
	Inputs	7 Loaded Magazine			
	Resources required	MLS Bridge Robot – 1 1 CRO		L. Milton B. Smith	
	Task Duration	30 minutes	Time includes selecting the correct 7 magazines and verification to ensure the magazines selected are the correct magazines (bar code reading).	L. Milton B. Smith	

Assumption No.	Category	Assumption Description	Note	Owner	Source Document
	Outputs	Loaded Canister			
	Other	Each canister loaded with 7 magazines.		L. Milton B. Smith	

Table J.4 Inspect Loaded Canister

Assumption No.	Category	Assumption Description	Note	Owner	Source Document
	Inputs				
	Resources required	MLS Bridge Robot - 1 1 CRO		L. Milton B. Smith	
	Task Duration	5 minutes		L. Milton B. Smith	
	Outputs				
	Other	Visual inspection Per 7/28/06 meeting with L. Milton and B. Smith, assume that the frequency and likelihood of a loaded canister failing the visual inspection does not warrant modeling at this stage of the project/model.		L. Milton B. Smith	

Table J.5 Install Temporary Plug in Canister

Assumption No.	Category	Assumption Description	Note	Owner	Source Document
	Inputs				
	Resources required	MLS Bridge Robot - 1 1 CRO		L. Milton B. Smith	
	Task Duration	5 minutes		L. Milton B. Smith	
	Outputs			L. Milton B. Smith	
	Other	Assume that all canisters pass inspection. Assume that plugs are available.		L. Milton B. Smith	

Table J.6 Weigh Loaded Canister

Assumption No.	Category	Assumption Description	Note	Owner	Source Document
	Inputs				
	Resources required	1 CRO		L. Milton B. Smith	
	Task Duration	5 min		L. Milton B. Smith	
	Outputs				
	Other	Automatic Assume that scale is part of loading station and therefore does not require moving the canister after loading is complete.		L. Milton B. Smith	

Table J.7 Place loaded canister in storage

Assumption No.	Category	Assumption Description	Note	Owner	Source Document
	Inputs	Loaded canister			
	Resources required	Purification Wing Bridge Crane - 1 1 CRO Loaded Canister Store Position - 1		L. Milton B. Smith	
	Task Duration	15 min		L. Milton B. Smith	
	Outputs				
	Other	Going over shielded wall. Assume 4 canister storage positions.			

Table J.8 Store Loaded Canister

Assumption No.	Category	Assumption Description	Note	Owner	Source Document
	Inputs	Loaded canister			
	Resources required	Loaded Canister Store Position - 1			
	Task Duration				
	Outputs				
	Ques/Triggers	When ever DWPF is ready to receive then cask is loaded with canister.			
	Other	Provide storage of minimum of 4 loaded canisters (1 wk			

Assumption No.	Category	Assumption Description	Note	Owner	Source Document
		capacity) 1 canister goes into 1 cask Ship one loaded canister at a time. This function serves as a place holder in model logic.			

Logic to account for empty canister handling time.

Table J.10 Planning meeting

Assumption No.	Category	Assumption Description	Note	Owner	Source Document
	Inputs				
	Resources required	1 RCO 2 CRO		L. Milton B. Smith	
	Task Duration	15 min		L. Milton B. Smith	
	Outputs				
	Other		Assumes 2 empty canister shipments per week. Assume that 2 canisters can be delivered at a time.	L. Milton B. Smith	

Table J.11 Prep Receipt Area

Assumption No.	Category	Assumption Description	Note	Owner	Source Document
	Inputs				
	Resources required	1 RCO 2 CRO		L. Milton B. Smith	
	Task Duration	1 hr		L. Milton B. Smith	
	Outputs				
	Other	Assume truck is here and in position.			

Table J.12 Bring truck in, undo tie downs

Assumption No.	Category	Assumption Description	Note	Owner	Source Document
	Inputs				
	Resources required	1 RCO 2 CRO		L. Milton B. Smith	
	Task Duration	30 min	This task includes: Station guards, open door, back truck in = 15 min Disconnect tie down from trailer = 15 min	L. Milton B. Smith	
	Outputs				
	Other	Assumes that empty canister unloading can be completed without unhitching trailer and removing the truck from the truck bay.		L. Milton B. Smith	

Table J.13 Place empty canister in lag storage

Assumption No.	Category	Assumption Description	Note	Owner	Source Document
	Inputs				
	Resources required	Purification Wing Bridge Crane - 1 1 RCO 1 CRO		L. Milton B. Smith	
	Task Duration	20 min		L. Milton B. Smith	
	Outputs				
	Other	Assume crane is inside and bad weather will not affect unloading.		L. Milton B. Smith	

Table J.14 Take Truck out, close door

Assumption No.	Category	Assumption Description	Note	Owner	Source Document
	Inputs				
	Resources required	1 RCO 2 CRO		L. Milton B. Smith	
	Task Duration	10 min		L. Milton B. Smith	
	Outputs				
	Other				

APPENDIX K -

Canister Transport System Assumptions

Table K.2 Planning meeting

Assumption No.	Category	Assumption Description	Note	Owner	Source Document
	Inputs				
	Resources required	1 RCO 2 CRO		L. Milton B. Smith	
	Task Duration	15 min		L. Milton B. Smith	
	Outputs				
	Other				

Table K.3 Prep Receipt Area

Assumption No.	Category	Assumption Description	Note	Owner	Source Document
	Inputs				
	Resources required	1 RCO 2 CRO		L. Milton B. Smith	
	Task Duration	1 hr		L. Milton B. Smith	
	Outputs				
	Other	Assume truck is here and in position.		L. Milton B. Smith	

Table K.4 Bring truck in, load canister on truck

Assumption No.	Category	Assumption Description	Note	Owner	Source Document
	Inputs	Loaded Canister (from CANL)			
	Resources required	Purification Wing Bridge Crane - 1 1 RCO		L. Milton B. Smith	

Assumption No.	Category	Assumption Description	Note	Owner	Source Document
		2 CRO Canister Transport Trailer (+) 1			
	Task Duration	30 min	This task includes: Station guards, open door, back truck in = 15 min load canisters = 20 min connect tie down to trailer = 15 min	L. Milton B. Smith	
	Outputs				
	Other	Assume that no cask is being used for canister transport to DWPF. Also assume, per 7/28/06 meeting with L. Milton and B. Smith, that the truck and trailer are dedicated to canister transport and are always available.		L. Milton B. Smith	

Table K.5 Release Truck for transport

Assumption No.	Category	Assumption Description	Note	Owner	Source Document
	Inputs				
	Resources required	1 RCO 2 CRO		L. Milton B. Smith	
	Task Duration	20 min		L. Milton B. Smith	
	Outputs				
	Other				

Table K.6 Take truck out and close door

Assumption No.	Category	Assumption Description	Note	Owner	Source Document
	Inputs				
	Resources required	2 CRO 1 RCO		L. Milton B. Smith	
	Task Duration	10 min		L. Milton B. Smith	
	Outputs				
	Other				

Table K.7 Transport canister to DWPF

Assumption No.	Category	Assumption Description	Note	Owner	Source Document
	Inputs				
	Resources required				
	Task Duration	1 hr		L. Milton B. Smith	
	Outputs				
	Other	Once per day		L. Milton B. Smith	

Table K.8 Survey and inspect trailer prior to next use

Assumption No.	Category	Assumption Description	Note	Owner	Source Document
	Inputs				
	Resources required	1 CRO 1 RCO Canister Transport Trailer (-) 1		L. Milton B. Smith	
	Task Duration	1 hr		L. Milton B. Smith	
	Outputs				
	Other	Done before loading or after unloading of canister on trailer.			

APPENDIX L -

Waste Management Assumptions

Logic for TRU/Mixed TRU Waste.

Table L1. Transport pails for waste handling

Assumption No.	Category	Assumption Description	Note	Owner	Source Document
	Inputs	Transport pails	Does not include removed equipment.		
	Resources required	WM Ops - 2		B. Westover E. Estochen B. Smith	
	Task Duration	15 min		B. Westover E. Estochen B. Smith	
	Outputs				
	Other				

Table L3. Place unassayed TRU pails in staging

Assumption No.	Category	Assumption Description	Note	Owner	Source Document
	Inputs	If TRU or Mixed TRU waste in pails then come here.			
	Resources required	WM Ops - 2 WM Unassay TRU Pail Store Position - 1		B. Westover E. Estochen B. Smith	
	Task Duration	20 min		B. Westover E. Estochen B. Smith	
	Outputs				
	Other	Assume 30 positions for Unassayed TRU pail staging.			

Table L4. Stage unassayed TRU pail

Assumption No.	Category	Assumption Description	Note	Owner	Source Document
	Inputs				

Assumption No.	Category	Assumption Description	Note	Owner	Source Document
	Resources required	WM Unassay TRU Pail Store Position - 1			
	Task Duration				
	Outputs				
	Other	Assume 30 positions for Unassayed TRU pail staging. This function serves as a place holder in model logic.			

Table L5. Transfer for assay and load

Assumption No.	Category	Assumption Description	Note	Owner	Source Document
	Inputs				
	Resources required	WM Ops - 2		B. Westover E. Estochen B. Smith	
	Task Duration	15 min		B. Westover E. Estochen B. Smith	
	Outputs				
	Other	Assume a 60 pail rack; 4 days capacity			

Table L6. Complete Q2 measurement

Assumption No.	Category	Assumption Description	Note	Owner	Source Document
	Inputs				
	Resources required	WM Q2 - 1		B. Westover E. Estochen B. Smith	
	Task Duration	90 min		B. Westover E. Estochen B. Smith	
	Outputs				
	Other				

Logic if Not TRU Waste.

Table L8. Transfer pail to LLW staging area

Assumption No.	Category	Assumption Description	Note	Owner	Source Document
	Inputs	Come here if not TRU waste. This is assumed to happen 20% of the time. LLW pails			
	Resources required	WM Ops - 2		B. Westover E. Estochen B. Smith	
	Task Duration	15 min		B. Westover E. Estochen B. Smith	
	Outputs				
	Other				

Logic if LLW/Hazardous/Mixed Waste.

Table L32. Transport bags to waste handling

Assumption No.	Category	Assumption Description	Note	Owner	Source Document
	Inputs	LLW bags	Estimating 5 LLW bags per day. One from each of the following rooms: Feed Prep., Oxidation, Bagless Transfer, Drum Loading, and Green Fuel Disassembly.	B. Westover	
	Resources required	WM Ops - 2		B. Westover E. Estochen B. Smith	
	Task Duration	15 min		B. Westover E. Estochen B. Smith	
	Outputs				
	Other				

Table L9. Place LLW pails in staging

Assumption No.	Category	Assumption Description	Note	Owner	Source Document
	Inputs	Come here if not TRU waste.			

Assumption No.	Category	Assumption Description	Note	Owner	Source Document
	Resources required	WM Ops - 2		B. Westover E. Estochen B. Smith	
	Task Duration	15 min		B. Westover E. Estochen B. Smith	
	Outputs				
	Other				

Table L10. Stage LLW

Assumption No.	Category	Assumption Description	Note	Owner	Source Document
	Inputs				
	Resources required				
	Task Duration				
	Outputs				
	Other	This function serves as a place holder in model logic.			

Table L11. Load B-25

Assumption No.	Category	Assumption Description	Note	Owner	Source Document
	Inputs				
	Resources required	WM Ops - 2		B. Westover	
	Task Duration	30 min		B. Westover	
	Outputs				
	Other	Per meeting with B. Westover (8/21/06), assume B-25 rather than B-12 for model. B-25 is 90 cubic feet. Assume a waste bag is about 4 cubic feet (per email from B. Westover, 8/30/06). Therefore, about 22 bags can be placed in a B-25.		B. Westover	

Table L33. Transfer for B-25 for weight

Assumption No.	Category	Assumption Description	Note	Owner	Source Document
	Inputs				
	Resources required	WM Ops - 2		B. Westover	
	Task Duration	10 min		B. Westover	

Assumption No.	Category	Assumption Description	Note	Owner	Source Document
	Outputs				
	Other				

Table L12. Weigh B-25

Assumption No.	Category	Assumption Description	Note	Owner	Source Document
	Inputs				
	Resources required	WM Ops - 2		B. Westover	
	Task Duration	5 min		B. Westover	
	Outputs				
	Other				

Table L13. Transfer B-25 to 0' level

Assumption No.	Category	Assumption Description	Note	Owner	Source Document
	Inputs				
	Resources required	WM Ops - 2		B. Westover	
	Task Duration	30 min		B. Westover	
	Outputs				
	Other				

Table L34. Transport empty B-25 for loading

Assumption No.	Category	Assumption Description	Note	Owner	Source Document
	Inputs				
	Resources required	WM Ops - 1		B. Westover	
	Task Duration	30 min		B. Westover	
	Outputs				
	Other				

Table L103. transaction discard and monitor LLW

Assumption No.	Category	Assumption Description	Note	Owner	Source Document
	Inputs				

Assumption No.	Category	Assumption Description	Note	Owner	Source Document
	Resources required				
	Task Duration				
	Outputs				
	Other	This function is for modeling purposes only.			

Logic for if after Q2 measurement, there is TRU waste.

Table L18. Transfer for assayed staging

Assumption No.	Category	Assumption Description	Note	Owner	Source Document
	Inputs				
	Resources required	WM Ops - 2		B. Westover E. Estochen B. Smith	
	Task Duration	15 min		B. Westover E. Estochen B. Smith	
	Outputs				
	Other				

Table L19. Stage assayed pails

Assumption No.	Category	Assumption Description	Note	Owner	Source Document
	Inputs				
	Resources required	WM Assayed TRU Pail Store Position - 1			
	Task Duration				
	Outputs				
	Other	Assume 60 positions for Assayed TRU pail staging. This function serves as a place holder in model logic.			

Table L20. Transfer pails for drum loading

Assumption No.	Category	Assumption Description	Note	Owner	Source Document
	Inputs				

Assumption No.	Category	Assumption Description	Note	Owner	Source Document
	Resources required	WM Ops - 2		B. Westover E. Estochen B. Smith	
	Task Duration	30 min		B. Westover E. Estochen B. Smith	
	Outputs				
	Other				

Table L21. Load drum

Assumption No.	Category	Assumption Description	Note	Owner	Source Document
	Inputs				
	Resources required	WM Ops - 2 WM Drum loading station - 1		B. Westover E. Estochen B. Smith	
	Task Duration	2 hr		B. Westover E. Estochen B. Smith	
	Outputs				
	Other				

Table L16. Transfer to APNMC and load

Table L16. Transfer to APNMC and load Assumption No.	Category	Assumption Description	Note	Owner	Source Document
	Inputs				
	Resources required	WM APNMC – 1 WM Ops - 2		B. Westover E. Estochen B. Smith	
	Task Duration	15 min		B. Westover E. Estochen	

Table L16. Transfer to APNMC and load

Table L16. Transfer to APNMC and load Assumption No.	Category	Assumption Description	Note	Owner	Source Document
				B. Smith	
	Outputs				
	Other				

Table L17. Complete APNMC measurement

Assumption No.	Category	Assumption Description	Note	Owner	Source Document
	Inputs				
	Resources required	WM APNMC – 1		B. Westover E. Estochen B. Smith	
	Task Duration	60 min		B. Westover E. Estochen B. Smith	
	Outputs				
	Other				

Table L24. Transfer assayed drum for staging

Assumption No.	Category	Assumption Description	Note	Owner	Source Document
	Inputs				
	Resources required	WM Ops - 2		B. Westover E. Estochen B. Smith	
	Task Duration	15 min		B. Westover E. Estochen B. Smith	
	Outputs				

Assumption No.	Category	Assumption Description	Note	Owner	Source Document
	Other				

Table L25. Stage assayed drum

Assumption No.	Category	Assumption Description	Note	Owner	Source Document
	Inputs				
	Resources required	WM Assayed Drum Staging - 1			
	Task Duration				
	Outputs				
	Other	Assume 4 positions for assayed drum staging. This function serves as a place holder in model logic.			

Table L26. Place drums on pallet

Assumption No.	Category	Assumption Description	Note	Owner	Source Document
	Inputs				
	Resources required	WM Ops - 2		B. Westover E. Estochen B. Smith	
	Task Duration	30 min		B. Westover E. Estochen B. Smith	
	Outputs				
	Other				

Table L27. Transfer to 0’ level thru ECF

Assumption No.	Category	Assumption Description	Note	Owner	Source Document
	Inputs				
	Resources required	WM Ops - 2		B. Westover E. Estochen B. Smith	
	Task Duration	30 min		B. Westover E. Estochen B. Smith	
	Outputs				

Assumption No.	Category	Assumption Description	Note	Owner	Source Document
	Other				

Table L28. Place drums in staging prior to shipment

Assumption No.	Category	Assumption Description	Note	Owner	Source Document
	Inputs				
	Resources required	WM Ops - 2		B. Westover E. Estochen B. Smith	
	Task Duration	15 min		B. Westover E. Estochen B. Smith	
	Outputs				
	Other				

Table L46. Transport 4 empty drums to waste handling

Assumption No.	Category	Assumption Description	Note	Owner	Source Document
	Inputs				
	Resources required	WM Ops - 1		B. Westover E. Estochen B. Smith	
	Task Duration	30 min		B. Westover E. Estochen B. Smith	
	Outputs				
	Other				

Table L101. transaction discard and monitor TRU waste

Assumption No.	Category	Assumption Description	Note	Owner	Source Document
	Inputs				
	Resources required				
	Task Duration				
	Outputs				
	Other	This function is for modeling purposes only.			

Logic for job control/ maint. TRU waste.

Table L30. Transport pails for waste handling

Assumption No.	Category	Assumption Description	Note	Owner	Source Document
	Inputs				
	Resources required	WM Ops - 2		B. Westover E. Estochen B. Smith	
	Task Duration	15 min		B. Westover E. Estochen B. Smith	
	Outputs				
	Other	Assume 2 TRU pails per day.			

Logic for HEPA filters in pails.

Table L38. Transport to waste handling

Assumption No.	Category	Assumption Description	Note	Owner	Source Document
	Inputs				
	Resources required	WM Ops - 2		B. Westover E. Estochen B. Smith	
	Task Duration	15 min	Per e-mail from Ashok Shah dated 8/22/06 ("HVAC System, HEPA/Pre-Filters"), the estimated number of 6" dia HEPA's is 8 and their expected changing frequency is 2 to 3 years. Assume that the HEPA's will be sent to waste at 1 per day starting at the end of year 2 (7/1/15) and starting again at year 4.5 (1/1/18).	B. Westover E. Estochen B. Smith	
	Outputs				
	Other	Assuming small HEPAs from gloveboxes (6"dia) will be able to fit into pails.			

Logic for HEPA filters in poly box.

Table L40. Transport poly box to waste handling

Assumption No.	Category	Assumption Description	Note	Owner	Source Document
	Inputs				
	Resources required	WM Ops - 2		B. Westover E. Estochen B. Smith	
	Task Duration	30 min	Per e-mail from Ashok Shah dated 8/22/06 ("HVAC System, HEPA/Pre-Filters"), the estimated number of 12" x 12" HEPA's/pre-filters is 60 each (120 total) and their expected changing frequency is 2 to 3 years. Assume that the HEPA's will be sent to waste at 10 per month starting at the end of year 2 (7/1/15) and starting again at year 4.5 (1/1/18). 24" x 24" main glovebox exhaust HEPA's will be placed in SWB's.	B. Westover E. Estochen B. Smith	
	Outputs				
	Other	Assume larger HEPA filters (12” X 12”) will be placed in poly boxes for waste handling. Assume 1 HEPA filters per poly box.			

Table L41. Place poly box in unassayed staging

Assumption No.	Category	Assumption Description	Note	Owner	Source Document
	Inputs				
	Resources required	WM Ops - 2		B. Westover E. Estochen B. Smith	
	Task Duration	20 min		B. Westover E. Estochen B. Smith	
	Outputs				
	Other				

Table L42. Stage unassayed poly box

Assumption No.	Category	Assumption Description	Note	Owner	Source Document
	Inputs				
	Resources required				
	Task Duration				

Assumption No.	Category	Assumption Description	Note	Owner	Source Document
	Outputs				
	Other	This function serves as a place holder in model logic.			

Table L43. Transfer for assay and load

Assumption No.	Category	Assumption Description	Note	Owner	Source Document
	Inputs				
	Resources required	WM Ops - 2		B. Westover	
	Task Duration	30 min		B. Westover	
	Outputs				
	Other				

Table L15. Complete GWAS measurement

Assumption No.	Category	Assumption Description	Note	Owner	Source Document
	Inputs	If do not have to do Q2 measurement, then come here. Assume do not have to do Q2 measurement 70% of the time.		B. Westover	
	Resources required	WMGWAS - 1		B. Westover	
	Task Duration	60 min		B. Westover	
	Outputs				
	Other				

Table L45. Complete Q2 assay

Assumption No.	Category	Assumption Description	Note	Owner	Source Document
	Inputs	If do have to do Q2 measurement, then come here. Assume this happens 30% of the time.		B. Westover	
	Resources required	WM Q2 - 1		B. Westover	
	Task Duration	90 min		B. Westover	
	Outputs				
	Other				

Table L47. Transfer for assayed staging

Assumption No.	Category	Assumption Description	Note	Owner	Source Document

Assumption No.	Category	Assumption Description	Note	Owner	Source Document
	Inputs				
	Resources required	WM Ops - 2		B. Westover	
	Task Duration	30 min		B. Westover	
	Outputs				
	Other				

Table L48. Stage assayed poly boxes

Assumption No.	Category	Assumption Description	Note	Owner	Source Document
	Inputs				
	Resources required				
	Task Duration				
	Outputs				
	Other	This function serves as a place holder in model logic.			

Table L49. Load SWB

Assumption No.	Category	Assumption Description	Note	Owner	Source Document
	Inputs				
	Resources required	WM Ops - 2		B. Westover	
	Task Duration	2 hr		B. Westover	
	Outputs				
	Other				

Table L50. Transfer to level 0’ thru ECF

Assumption No.	Category	Assumption Description	Note	Owner	Source Document
	Inputs				
	Resources required	WM Ops - 2		B. Westover	
	Task Duration	30 min		B. Westover	
	Outputs				
	Other				

Table L51. Place SWB in staging prior to shipment

Assumption No.	Category	Assumption Description	Note	Owner	Source Document
	Inputs				
	Resources required	WM Ops - 2		B. Westover	
	Task Duration	15 min		B. Westover	
	Outputs				
	Other				

Table L52. Transport empty SWB

Assumption No.	Category	Assumption Description	Note	Owner	Source Document
	Inputs				
	Resources required	WM Ops - 1		B. Westover	
	Task Duration	30 min		B. Westover	
	Outputs				
	Other				

Table L100. transaction discard and monitor activity

Assumption No.	Category	Assumption Description	Note	Owner	Source Document
	Inputs				
	Resources required				
	Task Duration				
	Outputs				
	Other	This function is for modeling purposes only.			

Logic for Removed Equipment and HEPA's in SWB.

Table L63. Transfer removed equipment/HEPA's to -20 for SWB loading

Assumption No.	Category	Assumption Description	Note	Owner	Source Document
	Inputs				
	Resources required	WM Ops - 2		B. Westover	
	Task Duration	30 min	Assuming 24" x 24" HEPAs from main glovebox	B. Westover	

Assumption No.	Category	Assumption Description	Note	Owner	Source Document
			exhaust system will fit 2 per SWB. Per e-mail from Ashok Shah dated 8/22/06 ("HVAC System, HEPA/Pre-Filters"), the estimated number of 24" x 24" HEPA's and pre-filters combined is 16 and their expected changing frequency is 4 to 5 years. Assume that the HEPA's will be sent to waste at 2 per day starting at the end of year 4 (7/1/17). NOTE: The generator for 24" x 24" HEPAs/pre-filters will send 8 individual transactions to waste mgt but each transaction represents a HEPA/pre-filter combination and therefore goes into a single SWB. This transaction count is consistent with the removed equipment assumptions of 1 transaction (piece of equipment) per SWB. It is further assumed that the transfer, assay, and loading of the HEPA/pre-filter combination can be accomplished in the same time as one piece of removed equipment.		
	Outputs				
	Other				

Table L64. Prepare for assay

Assumption No.	Category	Assumption Description	Note	Owner	Source Document
	Inputs				
	Resources required	WM Ops - 2		B. Westover	
	Task Duration	30 min		B. Westover	
	Outputs				
	Other				

Table L58. Assay removed equipment/HEPA's

Assumption No.	Category	Assumption Description	Note	Owner	Source Document
	Inputs				
	Resources required	WM GWAS - 1		B. Westover	
	Task Duration	1 hr		B. Westover	

Assumption No.	Category	Assumption Description	Note	Owner	Source Document
	Outputs				
	Other				

Table L55. Load SWB with removed equipment/HEPA's

Assumption No.	Category	Assumption Description	Note	Owner	Source Document
	Inputs				
	Resources required	WM Ops - 2		B. Westover	
	Task Duration	1 hr		B. Westover	
	Outputs				
	Other				

Table L59. Transfer for assayed staging

Assumption No.	Category	Assumption Description	Note	Owner	Source Document
	Inputs				
	Resources required	WM Ops - 2		B. Westover	
	Task Duration	30 min	Includes time for replacing SWB after assay, if necessary.	B. Westover	
	Outputs				
	Other				

Table L60. Stage SWB

Assumption No.	Category	Assumption Description	Note	Owner	Source Document
	Inputs				
	Resources required				
	Task Duration				
	Outputs				
	Other	The purpose of this function is to serve as a place holder in model logic.			

Table L61. Transfer to 0' level thru ECF

Assumption No.	Category	Assumption Description	Note	Owner	Source Document

Assumption No.	Category	Assumption Description	Note	Owner	Source Document
	Inputs				
	Resources required	WM Ops - 2		B. Westover	
	Task Duration	30 min		B. Westover	
	Outputs				
	Other				

Table L62. Place SWB in staging prior to shipment

Assumption No.	Category	Assumption Description	Note	Owner	Source Document
	Inputs				
	Resources required	WM Ops - 2		B. Westover	
	Task Duration	15 min		B. Westover	
	Outputs				
	Other				

Table L102. transaction discard and monitor SWB

Assumption No.	Category	Assumption Description	Note	Owner	Source Document
	Inputs				
	Resources required				
	Task Duration				
	Outputs				
	Other	This function is for modeling purposes only.			

APPENDIX M -

Labor and Equipment Assumptions

Table M1. Labor Assumptions

Labor Resource Name	Process Areas	Pool Name	Schedule	Number Available	Availability
FrontEndOperators	Green Fuel Disassembly, Feed Prep, Oxidation, Material Receipt (including NDA in)	FrontEndDays	DayShiftPlus	10	83%
		FrontEndBackshift	Backshift	10	70%
BTOperator	Bagless Transfer	BTDays	DayShiftPlus	3	83%
		BTBackshift	Backshift	3	70%
VitOperator	Vitrification	VitDays	DayShiftPlus	1	83%
		VitBackshift	Backshift	1	70%
MMOperator	Milling & Mixing	MMDays	DayShiftPlus	1	83%
		MMBackshift	Backshift	1	70%
ControlRoomOperator	Magazine Loading, Canister Loading, Canister Transport	ControlRoomDays	DayShiftPlus	3	83%
		ControlRoomBackshift	Backshift	3	70%
NDAOutOperator	NDA after Bagless	NDAOutDays	DayShiftPlus	2	83%
		NDAOutBackshift	Backshift	2	70%
RCO	RCO on All Process Areas	RCODays	DayShift	5	70%
		RCOBackshift	Backshift	5	70%
		RCODayRelief	DayShift	4	70%
WMOperator	Waste Management	WMDays	DayShift	4	70%
		WMBackshift	Backshift	4	70%
		WMDayRelief	DayShift	6	70%
DayReliefOperator	Green Fuel Disassembly, Feed Prep, Oxidation, Material Receipt (including NDA in), Bagless Transfer, Vitrification, Milling & Mixing, Magazine Loading, Canister Loading, Canister Transport, NDA after Bagless		DayShift	0	70%

Assumptions:

- MRS, GFDS, FP, and Oxidation personnel can rotate between their systems. These personnel are shared between all of these systems. Therefore, 10 Ops are available to work in any of these 5 systems.
- Total operator staffing on days is 20 /shift plus 4 on days for day relief = 24 total operators on days.
- Assume not addressing shift CRO's in staffing because these are always in control room (on +15) monitoring entire process.
- Total waste operator staffing on days is 4/shift plus 6 on days = 10 total waste operators on days.
- 70% availability is based on a 1 year time span where personnel spends approximately 20% of time in training and remaining 10% is for vacation, sick days, etc. Safety meetings, safety briefings, pre-job briefings, lunch and breaks are not included.
- Availability on "DaysPlus" schedule is adjusted to 83.3% (up from 70%) to account for additional hours available from the day relief operators (4) shown in the table but not included as another resource in the model. The 4 day relief operators are included as additional hours available for the front end operators, bt operators, vit operators, mm operators, control room operators, and NDA out operators.
- Assume no special jobs requiring special briefings to be included in model.
- Assume 30 min lunch break and two 15 min breaks throughout the day.
- A shift is 12 hours.
- A day shift is 12 hours.

Note. For all equipment, availability is considered to be 100%. Planned maintenance will be performed during planned facility outages every 6 months for a 1 month duration.

Table M2. Material Movement Equipment Assumptions

System	Type of Equipment	Total number of Equipment	Availability of equipment	Frequency and duration of unplanned outages	Source Document/ Contact
MRS – Material Movement	Hoist	1	100%	none	M. Petrella
MRS – Material Movement	Dumb waiter (0 to -40)	1	100%	1 per month; 1day	M. Petrella
MRS – Material Movement	3013 Cart	1	100%	none	M. Petrella
Conveyor A	Elevator	1	100%	1 per month; 1day	M. Petrella
Conveyor A	pallet	1	100%	1 per month; 3 hrs	M. Petrella
Conveyor B	Elevator	1	100%	1 per month; 1day	M. Petrella
Conveyor B	Pallet	1	100%	1 per month; 3 hrs	M. Petrella
Conveyor C	Elevator	1	100%	1 per month; 1day	M. Petrella
Conveyor C	Pallet	1	100%	1 per month; 3 hrs	M. Petrella
Conveyor D	Elevator	1	100%	1 per month; 1day	M. Petrella
Conveyor D	Pallet	1	100%	1 per month; 3 hrs	M. Petrella
Conveyor E	Elevator	1	100%	1 per month; 1day	M. Petrella
Conveyor E	pallet	1	100%	1 per month; 3 hrs	M. Petrella
Material movement from conveyor E to NDA equipment	Remote Handler (BT NDA Overhead Crane)	1	100%	1 per month; 1day	M..Petrella
Material Movement from NDA to Elevator	Shielded Bagless cart	1	100%	none	M. Petrella
Material Movement from -40 to -20	Elevator (-40 to -20)	1	100%	none	M. Petrella
Material Movement from -20 to -14	Mechanical Lift (-20 to -14)	1	100%	none	M. Petrella
Material Movement from Transfer Cart to Temp. Storage (-14)	MLS Remote Handler	1	100%	1 per month; 1day	M. Petrella

System	Type of Equipment	Total number of Equipment	Availability of equipment	Frequency and duration of unplanned outages	Source Document/ Contact
Material Movement from Temp. Storage (-14) to interim storage (Level 00)	MLS Dumb Waiter (-14 to 0)	1	100%	1 per month; 1day	M. Petrella

Table M2. Green Fuel Disassembly Equipment Assumptions

System	Type of Equipment	Total number of Equipment	Availability of equipment	Frequency and duration of unplanned outages	Source Document/ Contact
GFDS	Overhead Crane	1	Assume 100% available, completely dedicated to GFDS.	1 per year; 3 days	K. Oldfield
GFDS	Equipment for placing assembly in hood	NA	NA	NA	K. Oldfield

Table M3. Oxidation and Feed Prep Equipment Assumptions

System	Type of Equipment	Total number of Equipment	Availability of equipment	Frequency and duration of unplanned outages	Source Document/ Contact
Oxid	Outer Can Cutter	1	100%	15 times/yr; between 1-3 days	B. Randall
Oxid	Inner Can Cutter	1	100%	15 times/yr; between 1-3 days	B. Randall
Oxid	Metal Oxidation Furnace	2	100%	15 times/yr per furnace for a total of 30 times per year; between 1-3 days each time	B. Randall
Feed Prep	Can Puncture Device	1	100%	10 times/yr; between 0.5-2 days	B. Randall
Feed Prep	Outer can cutter	1	100%	15 times/yr; between 1-3 days	B. Randall
Feed Prep	Can Cutter	1	100%	15 times/yr; between 1-3 days	B. Randall
Feed Prep	Can Crusher	1	100%	15 times/yr; between 1-3 days	B. Randall
Feed Prep	Chemical Analysis Equipment (LIBS)	1	100%	1 time/yr; between 0.25-0.75 days	B. Randall

Table M4. Milling/Mixing and Vitrification Equipment Assumptions

System	Type of Equipment	Total number of Equipment	Availability of equipment	Frequency and duration of unplanned outages	Source Document/ Contact
Mill/Mix	Attritor Mills	2	100%	Assume attritor outage due to holdup once every two years. Outage lasts for two weeks.	D. Fisher

System	Type of Equipment	Total number of Equipment	Availability of equipment	Frequency and duration of unplanned outages	Source Document/ Contact
				Both attritors have to be shutdown for repair because both are in same glovebox.	
Mill/Mix	Bulk Frit Hopper	1	100%	none	D. Fisher
Vit	Melters	10	100%	2 times/yr/ melter (20 times per year); out for 3 shifts (36 hrs) each time.	D. Fisher

Table M5. Bagless Transfer Equipment Assumptions

System	Type of Equipment	Total number of Equipment	Availability of equipment	Frequency and duration of unplanned outages	Source Document/ Contact
BT	Bagless Transfer Units	3	100%	2 times/yr/ bagless transfer unit (3 bagless transfer units, so 6 times/yr); out 1 day each time.	K. Oldfield B. Smith
BT	BTC Can Cutter/Opener	1	100%	NA	K. Oldfield
BT	Leak Check Station	3	100%	2 times/yr/ leak check station (3 leak check stations, so 6 times/yr); out 1 day each time.	K. Oldfield B. Smith

Table M6. MLS, CANL, and CANT Equipment Assumptions

System	Type of Equipment	Total number of Equipment	Availability of equipment	Frequency and duration of unplanned outages	Source Document/ Contact
MLS	Bridge Robot	1	100%	1 per yr; 1 day	L. Milton
MLS	Magazine Loaders	1	100%	1 per yr; 1 day	L. Milton
CANL/ CANT	Purification Bridge Crane (holds both magazine loader and canister loader)	1	100%	3 per year; between 1-5 days	L. Milton
CANT	Canister Transport Trailer	1	100%	none	L. Milton

Assumptions:

1) Magazine loader will be custom equipment. Will utilize sealed bearings/drive, etc. to minimize maintenance. Expect unplanned outage due to control system rather than hardware.
2) Bridge crane will be commercially available design. High reliability and availability of vendor for service. Expect unplanned outage due to controller or software rather than hardware.

Table M7. Waste Management Equipment Assumptions

System	Type of Equipment	Total number of Equipment	Availability of equipment	Frequency and duration of unplanned outages	Source Document/ Contact
Waste Mang.	Drum cart	1	100%	NA	B. Westover
Waste Mang.	Pallet Jack	1	100%	NA	B. Westover
Waste Mang.	Drum Loading Station	1	100%	NA	B. Westover

Table M8. MC&A Equipment Assumptions

System	Type of Equipment	Total number of Equipment	Availability of equipment	Frequency and duration of unplanned outages	Source Document/ Contact
MRS	Calorimeter	2	100%	10% of time outage is expected. 5 times/yr/calorimeter (2 calorimeters, so 10 times/yr); between 5-9 days.	S. Kahook
MRS	GIS	2	100%	15% of time outage is expected. 3 times/yr/ GIS (2 GIS, so 6 times/yr); between 4-9 days.	S. Kahook
MRS	Neutron Multiplicity Counter	1	100%	10% of time outage is expected. 5 times/yr; between 4-8 days.	S. Kahook
GFDS	GIS	1	100%	3 times/yr per GIS; between 4-9 days.	S. Kahook
GFDS	NMC	1	100%	5 times/yr; between 4-8 days.	S. Kahook
Feed Prep	GIC	4	100%	15% of time outage is expected. 3 times/yr/ GIC (4 GIC, so 12 times/yr); between 4-9 days.	S. Kahook
Oxid	GIC	1	100%	3 times/yr per GIC; between 4-9 days.	S. Kahook
Oxid	NMC	1	100%	5 times/yr; between 4-8 days.	S. Kahook
Mill/Mix	Gamma monitor (hold-up)	4	100%	15% of time outage is expected. 5 times/yr/ gamma monitor (4 gamma monitors, so 20 times/yr); between 5-9 days.	S. Kahook
Mill/Mix	Neutron Probe 1 (probes at attritor mills)	2	100%	2 times/yr/probe (2 probes so 4 times/yr); between 2-3 days.	S. Kahook
Mill/Mix	Neutron Probe 2 (probes at weigh station)	2	100%	2 times/yr/probe (2 probes so 4 times/yr); between 2-3 days.	S. Kahook
Mill/Mix	GIS	1	100%	3 times/yr/GIS; between 4-9 days.	S. Kahook
BT	Calorimeters	12	100%	10% of time outage is expected. 5 times/yr/calorimeter (12 calorimeters so 60 times/yr); between 5-9 days.	S. Kahook
BT	GIS	4	100%	15% of time outage is expected. 3	S. Kahook

System	Type of Equipment	Total number of Equipment	Availability of equipment	Frequency and duration of unplanned outages	Source Document/ Contact
				times/yr/GIS (4 GIS so 12 times/yr); between 4-8 days.	
Waste Mang.	Q2	1	100%	15% of time outage is expected. 5 times/yr; between 5-9 days.	S. Kahook
Waste Mang.	Gamma Waste Assay System	1	100%	15% of time outage is expected. 5 times/yr; between 5-9 days.	S. Kahook
Waste Mang.	APNMC	1	100%	10% of time outage is expected. 5 times/yr; between 5-9 days.	S. Kahook

WASTE STUDY

FOR THE

PLUTONIUM DISPOSITION PROJECT

IN THE K AREA COMPLEX

SK-DA-WM-0001
Revision ~~1~~ B BLW 11/9/06

November 8, 2006

Prepared By: Betsy L Westover — 11-8-06
B. L. Westover — Date
NMM Environmental Engineering Lead Engineer

Reviewed By: D. P. Cal FOR EGE — 8 NOV 06
E. G. Estochen — Date
Design Authority Lead: Waste Management

UNCLASSIFIED
DOES NOT CONTAIN
UNCLASSIFIED CONTROLLED
NUCLEAR INFORMATION
ADC & Reviewing Official D. P. Cal
(Name and Title)
Date: 8 NOV 06

TABLE OF CONTENTS

1.0 PURPOSE 3
2.0 INTRODUCTION 3
3.0 ROLES AND RESPONSIBILITIES 3
4.0 WASTE TYPES 3
5.0 ASSUMPTIONS 4
6.0 WASTE SOURCES 6
6.1 D&R PHASE: 6
1. Clean/Sanitary Wastes and Recyclable/Salvageable Items: 6
2. Low Level Waste (LLW): 6
3. Mixed (Non-TRU)/Hazardous: 6
4. Polychlorinated Biphenyl (PCB) Waste: 7
5. Asbestos Waste: 7
6. Liquid Waste (LW): 7
7. Low Level Liquid Waste (LLLW): 7
6.2 OPERATIONAL PHASE: MAIN PROCESS AND MAINTENANCE ACTIVITIES 7
1. Clean/Sanitary/Green-Is-Clean Wastes: 8
2. Low Level Waste (LLW): 8
3. Mixed (Non-TRU)/Hazardous: 9
4. Transuranic (TRU) Waste: 9
5. Liquid Waste (LW): 11
6.3 OPERATIONAL PHASE: GENERATION RATES 11
7.0 WASTE ASSAY EQUIPMENT 11
8.0 WASTE MANAGEMENT AREA DESCRIPTION 12
9.0 WASTE STAGING AND INVENTORY CONTROL 13
10.0 WASTE PLANS, PROCEDURES, AND TRAINING 14
11.0 CHARACTERIZATION OF WASTE 15
12.0 ISSUES REQUIRING FURTHER INVESTIGATION/RESOLUTION 15
13.0 CONCLUSION 16
14.0 REFERENCES 16

1.0 PURPOSE

The purpose of this Waste Study is to provide the overall Waste Management (WM) strategy for the Plutonium Disposition Project which is designated to be constructed and operated in the K Area Complex. The strategy covers both the Demolition and Removal (D&R) phase and the Operational phase. The strategies discussed within are based upon the best available information to date and are subject to revision over time as the project evolves.

This document supersedes the following:

- SK-DA-WM-0001, Revision 0, Waste Study for the Plutonium Disposition Project in the K Area Complex (KAC) issued June 26, 2006.

2.0 INTRODUCTION

The Plutonium Disposition Project will be located at the K Area Complex (KAC) to disposition 13 Metric Tons (MT) of Environmental Management (EM) owned surplus plutonium [1]. The project will utilize a vitrification process to vitrify plutonium into a lanthanide borosilicate (LaBS) glass matrix. This glass will be packaged into bagless transfer cans and placed inside a Defense Waste Process Facility (DWPF) type canister. The canister will be transported to DWPF and filled with High Level Waste (HLW) glass. The DWPF canisters will be stored in the Glass Waste Storage Buildings and later transported to the geologic repository at Yucca Mountain. The plutonium vitrification operations are currently slated for 2012 through 2018. The plutonium disposition project is critical to meet the Department of Energy's strategic goal of providing a responsible resolution to the permanent disposal of the nation's excess high-level radioactive materials and waste; and to enable the cleanup of Environmental Management site by 2025.

The Plutonium Disposition Project will generate waste during the Demolition & Removal (D&R) phase and the Operational phase of the project. The D&R phase will remove excess equipment from the main K reactor building to make room for the installation of the Plutonium Vitrification (Pu-Vit) Facility. D&R of the -20 and -40 areas (both inside and outside the current Contamination Areas) will be required. There is a potential for a variety of waste types to be generated during this phase. The Operational phase will also have the potential to generate a variety of waste types, both from the main process and maintenance activities.

3.0 ROLES AND RESPONSIBILITIES

Design Authority Engineering

- Responsible for maintenance of this study
- Responsible for development of initial Waste Management system design
- Responsible for approval of all documentation related to Waste Management system final design.
- Responsible for addition of requirements associated with this strategy into Facility Design Description and System Design Description documents.

Design Authority Operations

- Responsible for facility implementation of this strategy.
- Responsible for procedure development required to implement this strategy.

Design Engineering Services

- Responsible for design development to meet this strategy.

Analytical Laboratories Project /Nuclear Measurements Section (ALP/NMS) Group

- Responsible for specification and approval of NDA equipment used to implement this strategy.

4.0 WASTE TYPES

The different waste types expected to be encountered during either the D&R or Operational phases of the project are defined below.

A. Clean Waste: waste that reads no more than background when monitored in an area with low background radiation, or <20 dpm alpha, < 200 dpm beta-gamma (includes Green-is-Clean waste)

B. Low Level Waste (LLW): radioactive waste that does not meet any other definition

C. Transuranic Waste (TRU): waste that is contaminated with alpha-emitting Transuranic radionuclides (atomic number > than 92) with half-lives > 20 years, and at concentrations > 100 nCi/g of waste matrix at time of assay. The mass of the waste container or shielding cannot be used in calculating the TRU concentration. However, if stabilization is required of the waste, a reclassification would be performed to determine whether TRU or LLW remains.

D. Hazardous Waste (HW): clean waste that is designated hazardous by South Carolina Hazardous Waste Management Regulations (SCHWMR) and as defined in the Resource Conservation and Recovery Act (RCRA)

E. Mixed Waste (MW): waste that contains both radioactivity and RCRA constituents (heavy metals, solvents, Methyl Ethyl Keytone (MEK), etc.)

F. PCB Waste (PCBW): waste that is contaminated with PCBs (Bulk Product: paint, light ballasts, cables, oils, gaskets, etc.). PCBW could be clean, LLW or also characterized as a Mixed Waste.

G. Mixed TRU Waste (MTRU): waste that is TRU and contains RCRA constituents

H. Low Level Liquid Waste (LLLW): liquid waste that is contaminated with radioactivity (could also contain RCRA constituents and be categorized as Mixed)

I. Liquid Waste (LW): non radioactive liquid waste (could also contain RCRA constituents and be categorized as Hazardous)

J. Beryllium Waste: waste that is contaminated with non-hazardous beryllium waste forms in concentrations requiring specific packaging/labeling (IH limits) and or reporting to the Waste Management Area Project (WMAP) facilities (waste containers with >1g Be)

K. Asbestos Waste: all waste containing, or with the potential to contain, asbestos fibers and which requires disposal at permitted disposal site (friable and nonfriable)

5.0 ASSUMPTIONS

The following assumptions were made in the development of this Waste Study and the overall Waste Strategy for the Plutonium Disposition Project.

D&R:

None

Operations:

1. Waste Management operations are located on -20, except for limited staging space located on -40, and pre-shipment staging at 0' level.

2. For Green Fuel Disassembly (GFD), oxide pellets will be extracted from slender steel pins that are approximately 8 feet in length. Hundreds of these pins are located within a Driver Fuel Assembly (DFA) or Ident-69G, of which 4-7 are stored inside a Core Component Container (CCC). The CCC with contents will be transported from Hanford to SRS enclosed in a DOT Type-B shipping container called the Hanford Unirradiated Fuel Package (HUFP). Prior to start-up of Pu-Vit processing, 13 loaded HUFPs will be moved into the building, and due to their size, will remain in the building until the end of the project. The GFD will be designed to maximize waste being categorized as LLW vs. TRU waste, and certain portions (i.e., HUFP, CCC, and empty DFA/Ident) will be nested as an assembly after removal of the fuel pins, and stored until the completion of material processing. At that time, the assemblies will be removed from the facility for entry into appropriate waste streams or recycled if possible. Based on current knowledge, all assembly components are expected be clean with only minimal contamination potential (i.e., LLW)

for the DFAs/Idents. The pins are expected to be TRU waste, but based on the purity of the contained oxides, will not be Mixed-TRU. The pins will be cut to size that will fit a standard TRU-pail, and will be sent to the Pu-Vit process waste stream.

3. Elevator(s) will be available to move waste containers from between the -20 and the -40 levels of the facility, and to the 0' level for exit through the Pu-Vit Entry Control Facility (ECF) to remote staging while awaiting shipment.

4. Fire suppression will include room sprinkler systems for portions of the process within the Plutonium Vitrification Facility (LW).

5. WM activities will be on a daily, if not 24/7, schedule, and an office area with computer station will be available in WM area.

6. Facility personnel, and not the Nuclear Measurements Section personnel, will operate the NDA equipment, unless special portable assays are requested.

7. WM area is RMA/RBA, no dress out required to perform waste activities once waste has left the individual process areas (contamination areas); even for drum loading (except for use of portable ventilation if needed).

8. Only waste from gloveboxes requires MC&A assays. Waste generated from general process rooms does not.

9. WSI will perform the SNM theft deterrent surveys upon removal of waste containers from MAA.

10. There are no security or MC&A issues associated with establishing MBAs outside of the MAA if required for waste containers staged while awaiting shipment to WMAP.

11. All TRU waste requiring packaging in an SWB will require assay prior to placement in the SWB as it is not practical to model a full SWB for assay (due to uncertain configuration of waste items inside SWBs).

12. All TRU pails, bagged HEPA filters, polyboxes, and drums, including drums direct loaded with waste that would not fit into a 5-gallon pail, will be subjected to assay on a LLW/TRU Waste Assay system.

13. Characterization as MW or MTRU waste (RCRA metal content), or as Beryllium Waste, is based on the following levels [6]:

Arsenic	5.0	mg/L (ppm)	
Barium	100.0	mg/L (ppm)	
Cadmium	1.0	mg/L (ppm)	
Chromium	5.0	mg/L (ppm)	
Lead	5.0	mg/L (ppm)	
Mercury	0.2	mg/L (ppm)	
Selenium	1.0	mg/L (ppm)	
Silver	5.0	mg/L (ppm)	
Beryllium	1.0	gram/container	(detection level for lab analysis to use 5 mg/L (ppm))

14. Glovebox waste will be directly bagged out of each glovebox. It was determined that this will be the most space efficient and cost effective option considering the layout of the facility. Automated waste removal utilizing a central waste hood was considered.

15. Glovebox waste (i.e., gloves and filters only) generation is estimated to be 7 m^3 per year. This is based upon the following assumptions:

    Glovebox Filters:
    - Size: 12" x 12" x 5 7/8" = 0.5 ft^3
    - Qty: 60 filters per 5 GB; assume 12 filters per GB
    - Change out Rate: assume FPS 3x/yr, Other GB 1x/yr = 84/yr

Waste Generation: 42 ft^3/yr = 1.2 m^3/yr

Gloves:

Assume all lead-lined
Qty: assume FPS and DMO = 48/GB; assume rest = 24/GB
Change out Rate: assume FPS and DMO = 1/mo; assume other GB = 1/3mo; = 1440 gloves/yr
Waste Generation: assume 5 gloves per pail; 0.67 ft^3 per pail; therefore, 193 ft^3/yr = 5.5 m^3/yr

6.0 WASTE SOURCES

The three sources of waste related to the Plutonium Disposition Project include: D&R, Main Process, and Balance of Plant (maintenance activities).

6.1 D&R Phase:

D&R of the -20, -40, -14, Purification Cell and Trailer Space areas of the K reactor building will involve the removal of a variety of equipment and piping which will present challenges in the characterization and packaging for disposal in the appropriate Treatment, Storage, and Disposal Facility (TSDF). The main items that will require removal include heat exchangers, Bingham pumps, AC and DC motors, motor control centers, moderator storage and overflow tanks, and several hundred feet of process, cooling, and effluent piping (24", 36", 42", and 48" diameter). Other tanks, equipment and piping will also require removal from these areas. In addition, the 186 basin will be drained and the sludge will be required to be removed and disposed, and the 190 Cooling Water (CW) Pumphouse will be D&R'd. The different types of D&R waste that could be generated are listed below with examples of each.

1. Clean/Sanitary Wastes and Recyclable/Salvageable Items:

The majority of the D&R items to be removed from the -40 motor rooms and cross over, the -20 pipe corridors and cross over and the 190 CW Pumphouse are expected to be non-radioactive. There are a few contamination areas (i.e., against the pump room wall on -40) that would generate LLW (see #2). Radiological Controls Operations (RCO) personnel will have to be involved in determining which items can be free released, which items fall under the metals moratorium, and which items may have to be treated as LLW due to unknown history. In addition, all items will require evaluations for asbestos, PCB and RCRA constituents prior to determining a final disposition path.

2. Low Level Waste (LLW):

The majority of the D&R items to be removed from the -20 Heat Exchanger Bay,the -40 Pump Rooms, -14, Purification Cells, and Trailer Space are expected to be LLW. This waste will fall under the established routine process area waste stream. If a waste with suspect origin requires disposal, NMM waste certification engineering will develop an appropriate waste stream. Sampling and analysis to quantify the radionuclide content of the waste may be required to determine the appropriate disposal facility. Waste will be packaged and handled in accordance with the established NMM Waste Certification Program Plans (WCPP), procedures, and training in approved containers as dictated by the disposal facility and the waste size. A potential challenge with some of the larger items will be whether size reduction will be required for either removal from the facility or to meet disposal facility requirements. Characterization methodologies may also require further definition to ensure accurate accounting of waste activity. NMM Waste Management, RCO, and WMAP personnel will be required to work closely with the project in pre-planning the D&R activities.

3. Mixed (Non-TRU)/Hazardous:

There is a potential for MW/HW to be generated from the D&R activities. Process knowledge and sampling & analysis will be utilized to evaluate all waste items to appropriately categorize them to ensure proper handling, staging, packaging, labeling and shipment. When MW/HW is identified, it will be moved to a RCRA satellite accumulation area (SAA) or staging area (SA), depending on the volume of waste. If there is less than 55 gallons of the particular mixed/hazardous waste generated and additional generation is expected, the SAA will remain established at or near the point-of-generation until 55 gallons has accumulated. Once 55 gallons has accumulated (or if more than 55 gallons is generated initially), the waste will be moved to a SA. At this time, the 90-Day regulatory clock will begin within which time the waste must be characterized and transferred to an approved TSDF. Waste Management, Environmental Compliance Authority, and Environmental Services Section (ESS) personnel will be required to work closely with the project in pre-planning the D&R activities.

Examples of MW/HW that could be encountered include: circuit boards, mercury switches, silver contacts, fluorescent lightbulbs, oils, excess chemicals, painted items, and lead shielding (i.e., bricks).

4. Polychlorinated Biphenyl (PCB) Waste:

There is a potential for PCB waste to be generated from the D&R activities. Process knowledge and sampling & analysis will be utilized to evaluate all waste items to appropriately categorize them to ensure proper handling, staging, packaging, labeling and shipment. When PCB waste is identified, it will be moved to the appropriate temporary PCB waste storage area as designated by the Environmental Compliance Authority (ECA). Depending on which type of area is utilized, the regulatory timeframe within which the waste must be packaged, characterized and transferred to WMAP can range from 30 days to 180 days. Waste Management, ECA and ESS personnel will be required to work closely with the project in pre-planning the D&R activities. Examples of PCB waste that could be encountered include: painted items (including walls, floors), rubber gaskets, rubber & plastic electrical cables, oils, capacitors, voltage regulators, and light ballasts.

NOTE: If PCBs are found in wall and/or floor paints that are to remain on the facility, there are requirements for painting over these areas with two coats of contrasting colors and labeling with the EPA Large Mark. Needs to be considered in the D&R and Construction phases of the project.

5. Asbestos Waste:

There is a potential for asbestos waste to be generated from D&R activities. Process knowledge and sampling & analysis will be utilized to evaluate all waste items to appropriately categorize them to ensure proper handling, staging, packaging, labeling and shipment. Although there is no regulatory time clock associated with asbestos waste, there are specific packaging and labeling requirements. Waste Management, ECA and ESS personnel will be required to work closely with the project in pre-planning the D&R activities. Examples of asbestos waste that could be encountered include: electrical cables, Transite boards, gaskets and pipe insulation.

6. Liquid Waste (LW):

There is the potential for LW (nonradioctive) to be generated from the D&R activities. If LW is generated, it will be handled using the standard building procedures and capabilities. The disposal path for LW would include staging, sampling, and evaluating against allowable release criteria. If the LW meets the release criteria, it would be released per facility procedures. If the LW does not meet the release eriteria, then evaluation against other disposition criteria would be completed. Mixing with grout (or some other type of absorbent/solidification agent) may be required. The final LW containers will be staged in a designated staging location until transferred to the final disposal location. Waste Management personnel will be required to work closely with the project in pre-planning the D&R activities. Examples of LW that could be encountered include: oils, sump liquids, and decontamination liquids.

7. Low Level Liquid Waste (LLLW):

There is a potential for LLLW to be generated from the D&R activities. Although most of the process water piping and components have been drained and/or vacuum dried, it is likely that residual amounts of tritiated liquids (i.e., moderator) will be discovered during line breaks and disconnections of equipment. This LLLW will be collected in appropriate containers (e.g., drums, TUFF tanks), sampled, characterized and dispositioned utilizing existing facility procedures. Depending on the amount generated, the purity of the tritiated liquid, and other sample results, the liquid may be placed into the moderator program versus the waste program. If determined to be waste, the final LLLW containers will be staged in a designated staging location until transferred to the final disposal location. Waste Management personnel will be required to work closely with the project in pre-planning the D&R activities. Other examples of LLLW that could be encountered include: tritiated oils, sump liquids, and decontamination liquids.

6.2 Operational Phase: Main Process and Maintenance Activities

The operational phase of the process will generate a variety of the waste types. There will be main process wastes which include glovebox waste such as the empty 3013 containers along with any additional cans inside the 3013s, failed bagless transfer cans, weld stubs, pin components from Green Fuel Disassembly, HEPA filters, contaminated equipment, gloves,

wipes, and other glove box and Job Control Waste (JCW). Some of these wastes, due to their size and location in the process, may present challenges in the logistics of waste container movements within the Plutonium Vitrification Facility to the 0' Level, and beyond the Pu-Vit ECF for staging until shipment. The different types of Operational waste that could be generated are listed below with the general process, flow path, requirements, and examples of each.

1. Clean/Sanitary/Green-Is-Clean Wastes:

The operational phase of the project will generate clean/sanitary/Green-is-Clean (GIC) wastes from the Green Fuel Disassembly and Non-Nuclear Material Handling portions of the project. This will include the HUFP/CCC and likely DFAs/Ident-69Gs, empty packaging from supplies required for the process and any excess/unused chemicals. Excess/unused chemicals requiring disposition will be handled per established procedure with the assistance of the NMM Chemical Coordinator. GIC waste will consist of RMA waste that is non-radioactive and associated waste as defined per the WSRC 1S Manual.

2. Low Level Waste (LLW):

The operational phase of the project may generate LLW from glovebox operations in the Green Fuel Disassembly, Feed Preparation, Oxidation and Bagless Transfer portions of the process. In addition, general room waste and JCW are generated throughout the entire process. Additional LLW may be generated from the use of containment devices. The two sources of LLW will be differentiated as follows: GB-LLW for LLW from the glovebox processes and RM-LLW for LLW from the general rooms (outside of glovebox).

GB-LLW:

Feed Preparation and Oxidation GB-LLW consist of the outer 3013 cans, which have the potential of being LLW as they are cut and separated in a segregated glovebox cabinet (by way of an airlock) from where the inner containers/material will be accessed. Bagless Transfer GB-LLW consists of the weld stubs, which have the potential of being LLW due to limited contamination potential inherent in this post-vitrification portion of the process. However, until proven to be LLW, they will be handled as if TRU. The outer 3013 containers will be bagged out of the glovebox in the same manner as TRU waste, placed into 5-gallon pails, and taken to unassayed 5-gallon pail staging (see #3 below) to await assay. If when assayed these 5-gallon pails are determined to be LLW, they will be moved to the LLW staging area, where the bags will be removed from the 5-gallon pails and placed into a B12/B25. The 5-gallon pails will then be surveyed by RCO and if cleared, relocated to the -40 clean 5-gallon pail storage area for reuse. If they cannot be cleared, the 5-gallon pails will also be disposed of as LLW in the B12/B25.

Green Fuel GB-LLW will include at least portions of the pins, after oxide pellet removal. The pins will be cut to pieces of a length compatible with a 5-gallon pail. Assay of the TRU pails containing the cut pin portions will confirm waste type, and the pail will either be handled as TRU or as discussed previously for glovebox LLW. If pin seal integrity has been maintained, and the DFA/Ident-69G has not been contaminated, the DFAs/Idents will be returned to the CCC from which they were removed for storage until the end of the project, at which time they will be removed from the facility, and either disposed of or recycled as appropriate. Contaminated DFAs/Idents will be size reduced, and removed as TRU or LLW depending on assay results. This process applies only to those pins in DFAs that were not exposed to Sodium. See Section 12.0, Item #5 for the issue with the Sodium Contaminated DFA Pins.

RM-LLW:

The general room waste and containment device waste is expected to consist of typical JCW, such as tape, cloth gloves, etc. RM-LLW will be collected in radioactive waste bags and segregated with regard to the waste stream. Receptacles, which are lined with a radioactive waste bag, will be located throughout the facility (i.e., at stepoff pads) for collection of LLW. Once full, each bag will be surveyed and cleared by RCO and then relocated to the LLW staging area. Each bag will then be weighed and tagged with a Radioactive Waste Tag, which includes the following information: generation location, date, alpha room posting, bag weight, contents and waste generator initials. The waste generator will ensure that RCO obtains the dose rate of the bag. The bags will then be loaded into a B12/B25 located on the -20 level, in a dedicated LLW processing room. A Curie logsheet is filled out for each B12/B25 listing every LLW bag (either GB or RM) that is loaded into that B12/B25. Once the B12/B25 is full, it is weighed, Tamper Indication Device (TID) attached, and relocated to the 0' Level Waste Staging location outside the MAA until shipment to the appropriate WMAP facility.

NOTE: Depending on the quantification of RCRA constituents in the plutonium oxide material that is to be processed through the Pu-Vit process, and how that transfers to the waste to be disposed from K Area, the LLW waste discussed above may in actuality be categorized as Mixed waste (either all or at least some portion). The exact volume will not be determined until either process knowledge or analysis can be conducted to complete the evaluations.

3. Mixed (Non-TRU)/Hazardous:

The operational phase of the project is expected to generate limited amounts of Mixed (Non-TRU)/Hazardous waste. Examples would be damaged, unused lead-lined gloves, decontamination chemicals, non-clearable fluorescent lightbulbs, non-clearable batteries (lead-acid, nickel-cadmium), painted items, etc. When MW/HW is identified, it will be placed into a RCRA satellite accumulation area (SAA) or staging area (SA), depending on the volume of waste accumulated by the end of that shift. This SAA or SA will be established within the MAA. If there is less than 55 gallons of the particular mixed/hazardous waste generated and additional generation is expected, the SAA will remain established at or near the point-of-generation until 55 gallons has accumulated. Once 55 gallons has accumulated (or if more than 55 gallons is generated initially), the waste will be moved to a SA. At this time, the 90-Day regulatory clock will begin within which time the waste must be characterized and transferred to an approved TSDF. Characterization of the waste may involve RCO surveys, NDA assays, and/or sampling & analysis, depending on the type of waste and the generation point. Once the drum is characterized, it will be relocated to a RCRA SA located to the 0' Waste Staging location outside the MAA in preparation for shipment to WMAP.

4. Transuranic (TRU) Waste:

The operational phase of the project will generate TRU waste throughout the glovebox operations. For clarification purposes, three "sources" of TRU waste have been identified. First is that from the Green Fuel Disassembly (GFD), referred to as GFD-TRU. The second source is the waste from processing material contained in 3013s, referred to as Vit-TRU. Though separated for ease of discussion, the two portions of the process will be interconnected, with Vit-TRU relying on GFD to handle any "high" TRU 5-gallon pails, and GFD-TRU being fed back into the Vit-TRU stream. The third source is from the Balance-of-Plant (BoP) operations, such as equipment and HEPA filter change-outs, and maintenance activities, referred to as BoP-TRU. The WM area will have a non-destructive LLW/TRU Waste Assay System available to determine waste package categorization (LLW or TRU). The LLW/TRU Waste Assay System must be located in an area of low background or shielded such that it can detect to the levels necessary to differentiate between the two. Consideration of separate spacing for TRU and Mixed TRU (MTRU) waste is required to facilitate expedited disposal requirements for MTRU.

Vit-TRU:

The waste generated by the processing portion of the facility consists primarily of empty inner 3013 cans, pin fuel cans used to transport material from GFD to the Feed Preparations glovebox, convenience cans, failed bagless transfer cans, weld stubs that cannot be classified as LLW, lead-lined gloves (MTRU) and other glovebox waste. It is assumed that all of the waste will be of a geometry that can be handled by standard 5-gallon pails. Based on a daily processing rate of five (5) 3013 containers, it is estimated that, along with JCW and a contingency, a total of 14 Vit-TRU 5-gallon pails will be generated by the process each day. The glovebox waste will be bagged out at each station utilizing established procedures, placed into 5-gallon pails and staged in the Unassayed Container Staging Room of Waste Management (WM). Unassayed 5-gallon pail staging will require a criticality-safe (i.e., minimum 2 foot surface to surface spacing) staging rack. Rack capacity should be based on thirty 5-gallon pails to account for a minimum of 25 spaces for TRU 5-gallon pails and 5 spaces for segregation of MTRU 5-gallon pails. When designated, 5-gallon pails will be assayed utilizing a LLW/TRU Waste Assay System. If at this time any 5-gallon pails can be categorized as LLW, they will be relocated to the LLW staging room and processed as described in #2 above. Any 5-gallon pails that exceed assay limits, will be classified as a "high pail", and sent to the "high pail" repackaging portion of GFD. Once repacked in GFD, they will either be assayed at GFD using a portable waste assay system, or brought back to the TRU Waste Assay Room for re-assay to determine if repackaging was successful. If not, repackaging continues until the 5-gallon pail(s) is below acceptable limits. The 5-gallon pails that are within assay limits are then moved to the Assayed Pail Staging Room (non-spacing-critical) with a capacity of 50 TRU 5-gallon pails and 10 MTRU 5-gallon pails.

After determined ready by the Generator Certification Official (GCO) and/or Waste Certification Engineer (WCE), the assayed 5-gallon pails are evaluated for packaging into a TRU 55-gallon drum. The selected 5-gallon pails are relocated to the TRU Waste Loading Room where they are opened, the bags removed and placed into a TRU drum. Either a filtered containment device (i.e., hood) or a MAC-21 (or equivalent portable ventilation device) will be available for the drum loading operation, if determined necessary by RCO. The empty 5-gallon pails will be recycled back into the process if cleared by RCO. Non-cleared 5-gallon pails will be disposed of as LLW. The loaded drum will be weighed, TIDs attached, and undergo an accountability measurement (i.e., nuclear coincidence counter) to ensure no diversion of SNM has occurred. Drums that contain suspect or low levels of transuranics may be placed in the LLW/TRU Waste Assay System to determine if the contents meet LLW disposal limits. The drum will then be relocated to the 0' Waste Staging location outside the MAA until shipment to the appropriate WMAP facility. Production support requires the 0' Waste Staging location to have a capacity of 60 drums and to account for segregation of TRU and MTRU drums..

GFD-TRU:

Anticipated GFD-TRU waste includes the portion of the fuel pins in contaet with the pellets, wipes, lead-lined gloves (MTRU), and other glovebox waste. It is anticipated that all other components of Green Fuel waste, including DFAs, Ident-69Gs, CCCs and HUFPs, will be categorized as either clean/sanitary or LLW. Due to the length of the fuel pins, size reducing equipment will be required as part of the process. The glovebox containing the size reduction capability required for GFD-TRU will also be fed by Vit-TRU to eliminate the need for a separate "high pail" repackaging glovebox. If size reduction of the pins to fit in a pail is impractical or other large items exist, drums and standard waste boxes (SWBs) may be required to package the waste. Waste that is TRU-5-gallon pail size compatible will be fed into the unassayed 5-gallon pail staging portion of Vit-TRU. Based on GFD production rate, equivalent to one 3013 container per day, it is anticipated that two (2) GFD-TRU pails will be contributed per day to Vit-TRU. Items too large to fit inside pails, but small enough to fit inside a drum, will require assay using a portable LLW/TRU Waste Assay system. Items that are too large to fit inside a drum, will either require size reduction to fit in a drum, or will require an alternate method of assay (TBD) prior to loading into SWBs as part of GFD. Once loaded with the assayed items, the full SWBs will be weighed, TIDs attached, assessed (method TBD) to ensure no diversion of SNM, then relocated to the 0' Waste Staging location outside the MAA until shipment to the appropriate WMAP facility. Partial SWBs will be staged in either the SWB Loading Area or the Failed Equipment Room until fully loaded. Any drums generated in GFD will be fed to the Vit-TRU process at the weigh and accountability stage.

BoP-TRU:

The waste generated by the balance-of-plant portion consists primarily of waste generated due to maintenance activities from all portions of the process. Examples include spent HEPA filters, lead-lined gloves (MTRU) and contaminated equipment. That waste removed from the glovebox with 5-gallon pails will be generated and follow the path as outlined in Vit-TRU. In the extraordinary event that a piece of equipment should fail while loaded, and the load cannot be completely removed (i.e., locked attritor mill grinding arms or melter vessel/pour heater failures), special procedure based response actions will be required to remove the failed piece of equipment, quantify the accountable material, potentially size reduce high-dose equipment, and process through the appropriate waste stream. Further description of the special circumstances associated with the loaded equipment failure, beyond the need for a special operations procedure and the requirement for a dedicated failed equipment room in the facility to deal with this maintenance activity, is outside the scope of this Waste Study at the CD-1 stage. All other items, too large for 5-gallon pails may be packaged directly into drums, HEPA filter polyboxes, or SWBs depending on size. If items fit into drums, drums will be brought to that portion of the process where equipment is to be removed. If items are too large for drums and SWBs cannot be placed directly at the point of waste generation, then with RCO approval, items will be bagged, assayed and then loaded into an SWB as close to the glovebox location as safely possible.

The HEPA filter polyboxes will be handled and treated similarly to 5-gallon pails in that, once filled, they will be relocated to the Unassayed Container Staging Room, (which will also require criticality-safe staging configuration), subject to assay using the LLW/TRU Waste Assay system, characterized as either LLW or TRU, if "high", repackaged if needed in GFD, and finally placed into assayed staging in the SWB Loading Area until GCO/WCE authorizes loading into a SWB.

Any direct loaded drums will have to be staged in the Unassayed Container Staging Room, and remain in a criticality-safe staging configuration until assayed. Once assayed, weighed, and TIDs attached, they will follow the path as outlined in Vit-TRU for drums.

Due to the size of SWBs, a dedicated SWB weigh room will be required. This room will also include SWB loading if the SWB cannot be taken to the process location where the waste is to be generated. The final Safeguards "no diversion of

material" confirmation for a SWB, prior to removal from the facility is TBD, and is not documented here because of no current known method of accountability on items the size of a SWB.

NOTE: Depending on the quantification of RCRA constituents in the plutonium oxide material, in various concentrations [4],1 that is to be processed through the Pu-Vit process and how that transfers to the waste to be disposed from K Area, the TRU waste discussed above may in actuality be categorized as Mixed TRU waste (either all or at least some portion). The exact volume will not be determined until either process knowledge or analysis can be conducted to complete the evaluations. The key impact would be the required expedited timeframe from waste generation to shipment for disposal (RCRA 90 Day Clock requirements).

5. Liquid Waste (LW):

The operational phase of the project is expected to be dry throughout. However, there is the potential for LW generation from eyewash stations, decontamination activities, emergency events such as fire, and any lubricating or cooling fluids required for equipment operation. If LW is generated, it will be handled using the standard building procedures and capabilities. The disposal path for LW would include staging, sampling, and evaluation against allowable release criteria. If the LW meets the release criteria, it would be released per established facility procedures. If the LW does not meet the release criteria, then evaluation against other disposition criteria would be completed. If those criteria are met, the LW will be packaged to meet the received TSDF's requirements. Solidification/absorption of the LW may be required to meet the TSDF Waste Acceptance Criteria (WAC) or chosen as an option for disposal, which could include mixing with grout (or some other type of absorbent/solidification agent). This evolution would preferably take place outside the Plutonium Vitrification Facility itself. The LW containers would be relocated outside the MAA to 0' level via the elevator either for further processing or relocation to a designated staging area while awaiting shipment to WMAP.

6.3 Operational Phase: Generation Rates

The expected waste generation rate for the Operational Phase of the Pu-Vit facility waste streams has been estimated on an annual basis assuming a 24 hour 7 day a week operation. The generation rates per waste stream are summarized in the table below:

Waste Stream	Estimated Annual Generation Rate (m^3/year)
Clean/Sanitary/GIC	50
Low Level Waste	250
Mixed Waste (non-TRU)	80
Hazardous Waste	80
TRU/MTRU	460
Liquid Waste	0 (expected)

7.0 WASTE ASSAY EQUIPMENT

All waste leaving the MBA/MAA will be assayed for accountability values and diversion. LLW may be assayed for accountability values and diversion prior to being placed in B12/B25 containers. All material placed in B12/B25 containers will be under two-person control during use and locked and TID'd between uses.

A LLW/TRU waste assay system will be used to perform the initial assay of 5-gallon pails to obtain accountability values and determine if the pail is LLW or TRUW. Large items, such as removed equipment and filters, are assayed with a portable waste assay system to obtain the accountability values. This portable waste assay system will consist of a HPGe detector on cart with a turntable. Full loaded drums will be assayed with an APNMC prior to leaving the facility to ensure that no diversion of SNM has occurred. Larger items such as SWBs will require special equipment for assay prior to leaving the facility to ensure no diversion of SNM has occurred. This equipment has yet to be determined.

As part of waste minimization, a LLW/TRU NDA instrument must be located in a shielded area to reduce background radiation levels to determine if certain categories of TRU waste are in actuality LLW.

Space must be allocated for TRU pails, 5-gallon pails and drum NDA equipment, LLW/TRU instrument and drum loading. Special discard limits will be established and approved for all waste by MC&A closer to the startup of the project once waste streams are established.

The following assay instruments will be utilized in the Waste Management System:

Quantity	Instrument Type	Function
5	Scale	One scale to weigh pails One scale to weigh drums One scale to weigh SWBs One scale to weigh bags One scale to weigh B12s/B25s
1	LLW/TRU Waste Assay System	Assay waste pails, drums, polyboxes for determination as LLW or TRU, and to obtain accountability values used for characterization.
1	Active Passive Neutron Multiplicity Counter	Assay waste drums for SNM diversion data.
1	Portable Waste Assay System	Assay removed equipment, items too large to fit in pail or drum, and other items as needed for accountability values used for characterization.

8.0 WASTE MANAGEMENT AREA DESCRIPTION

The Pu-Vit Waste Management System consists of several rooms located throughout the facility on the -40, -20 and 0' levels. These rooms have various purposes to support the generation, transport, staging, assaying, loading/packaging, and shipping of waste. Listed below is each room with a short description of its purpose, general location, and room content. As the project matures and waste streams are defined, the room content with respect to number of waste containers/cuts for each may change, as well as required equipment. The information described below is based on the best available data to date.

1. Unassayed Container Staging Room: This room is to be located on -20 and will be used to stage unassayed waste containers in criticality safe arrays. The maximum amount of containers to be staged in this room include: 30 5-gallon pails, 10 small HEPA polyboxes, and four (4) 55-gallon TRU drums. If large polyboxes are to be utilized or staged in this room, then the number of containers would be limited to within the finalized allowed inventory for the room.

2. TRU Waste Assay Room: This room is to be located on -20 and will be used for the assay of waste containers including 5-gallon pails, HEPA polyboxes, drums, large items, etc. Only one item at a time will be brought into the room for assay, unless determined by ALP/NMS that more than one assay machine can be utilized at a time. The room or equipment within the room will be shielded as necessary to ensure that the background levels are low enough to allow for differentiation between LLW and TRUW when assayed. The equipment to be located in this room include: 2 scales, the LLW/TRU Waste Assay System, the APNMC, and a Portable Waste Assay System.

3. Assayed Pail Staging Room: This room is to be located on -20 and will be used for staging 5-gallon pails after they have been assayed. Space for up to 60 pails will be allocated, which includes an area for "high" pails while awaiting relocation to GFD for repackaging. The pails will be staged on shelving, at most two high.

4. TRU Waste Loading: This room is to be located on -20 and will be used for loading assayed 5-gallon pail waste into 55-gallon TRU waste drums. A MAC-21 or ventilation hood will be available for use during waste loading if determined necessary by RCO. Up to four (4) drums worth of waste can be staged in this room at one time. Pails will be opened, the bagged waste cuts removed and then placed directly into the designated drum. Once the drum is loaded and sealed, it will be transported back to the TRU Waste Assay Room for weighing and assaying in the APNMC for SNM checks.

5. SWB Loading Area: This room is to be located on -20 and will be used for loading SWBs with assayed waste such as HEPA filter polyboxes or large items. Unassayed waste cuts may be staged in SWBs in this room temporarily if needed until the waste cuts can be relocated to the TRU Waste Assay Room for assaying. Up to 2 SWBs and 12 assayed small polyboxes may be staged in this room at one time. Shelving for staging the assayed polyboxes (to fit both the small and large), hoisting equipment to assist with the loading of the SWBs, and a scale to weigh the SWBs will be provided. The hoisting equipment should be able to lift a full SWB if needed.
6. Outgoing Waste Staging Area: This room is to be located on -20 and will be used for staging a pallet to collect up to 4 full TRU waste drums. Once four drums have been collected, the pallet will be relocated by elevator to 0' level for removal from the MAA.

7. Failed Equipment Staging Room: This room is to be located on -20 and will be used for staging SWBs containing failed equipment from the gloveboxes (e.g., melter, furnace, and attritor) with various amounts of MAR. The room or containers within the room may require shielding for personnel protection. These items will require staging while characterization and MC&A issues are resolved for their final disposition. Up to three (3) SWB may be staged in this room at one time. Hoisting equipment to assist with the loading of the SWBs and relocating of the loaded SWBs, if necessary, will be provided.

8. LLW Staging Room: This room is to be located on -20 and will be used for staging bags of RM-LLW from the various process rooms and containers of GB-LLW until time to package into the B12s/B25s. Up to 2 B25s worth of LLW will be staged in this room at a time. A scale for weighing the bags of LLW will be located in this room.

9. LLW Loading Room: This room is to be located on -20 and will be used for loading the LLW into the B12s/B25s. Once all information from the RM-LLW bags and/or GB-LLW pails is obtained, the LLW will be added to the B12s/B25s. Once full, the B12/B25 will be sealed, weighed and TID'd then relocated to 0' level for removal from the MAA. The scale for weighing the B12/B25 will be located in this room.

10. Waste Staging Room: This room is to be located on -40 and will be used for temporarily staging LLW until it is transported to -20. No TRUW is to be staged in this location. Up to one (1) B25's worth of LLW may be staged in this room at a time.

11. HW/MW (Non-TRU) Staging: This room is to be located on -40 and will be used for the establishment of Satellite Accumulation Areas (SAA) if needed. Up to two (2) drums worth of HW/MW may be staged in this room at one time. Once a SAA drum is full, it will be relocated, within the same room, to a Staging Area (SA) and the 90-Day clock initiated. Once the drum is characterized and cleared through SNM checks, it will be relocated to 0' level for removal from the MAA.

12. 0' Level Waste Staging: This room/building is to be located on 0' and will be used for the staging of full, characterized waste containers awaiting shipment to WMAP. The containers will consist of drums, SWBs, and B12/B25s. A capacity of 60 TRU drums, 10 SWBs and 30 B12s/B25s will be provided. This building must be a Hazard Category 2 facility. Fork truck access and hoisting equipment will also be required. Shelving may be utilized for TRU drum and SWB staging if needed. If HW/MW (Non-TRU) drums requiring staging in this facility, they will be part of the 60 drum staging portion. TRU drums and SWBs shall not be stacked directly on top of each other. B12s/B25s may be stacked two (2) high.

9.0 WASTE STAGING AND INVENTORY CONTROL

All LLW waste staging areas in and around the KAC have been designated as Hazard Category 3 facilities. Therefore, the total inventory of all LLW waste staged (regardless of actual location or waste stream) in and around K Area must meet the DSA requirements (<20% of the HC2 TQ and the fissile mass limits). No credit is taken for waste stored in physically

separated areas. It is assumed all LLW waste is staged together (as if in one big "pile") and subject to the proposed accidents described in the DSA.

Due to the radionuclide content of TRU waste and that the inventory of only one or two 5-gallon pails of TRU waste can exceed the Hazard Category 3 limits, all TRU waste staging areas must be within a Hazard Category 2 facility until transferred out of the KAC. The specific structural requirements of the waste staging facilities (e.g., PC-2, PC-3, Seismic qualifications, ventilation, etc.) will be determined through Consolidated Hazards Analysis Process (CHAP) evaluation.

During the CHAPs process, the various waste processing and staging rooms were defined and assigned a Material at Risk (MAR). The maximum FGE Pu-239 values per container type are assumed to be as follows [2,3,4]:

TRU drum = 195 g	Large Polybox = 100 g
Pail = 20 g	Small Polybox = 40 g
SWB = 325 g	B12/B25/LLW drum = 31 g

The table below summarizes the MAR assumed per room utilized in the WM CHAPS process:

Waste Management Room	Location	Contents	MAR (FGE Pu-239; grams)
Unassayed Container Staging Room	-20	32 Pails, 6 Drums, 12 Small Polyboxes	2490
TRU Waste Assay Room	-20	1 Drum or 1 Pail or 1 Polybox	195 (max)
Assayed Pail Staging Room	-20	64 Pails	1280
TRU Waste Loading Room	-20	4 Drums (equivalent)	780
SWB Loading Area	-20	12 Small Polyboxes (equivalent), 2 SWBs	1130
Outgoing Waste Staging Area	-20	4 Drums	780
Failed Equipment Staging Room	-20	3 SWBs	975
LLW Staging Room	-20	2 B25s (equivalent)	62
LLW Loading Room	-20	4 B25s	124
Waste Staging Room	-40	1 B25 (equivalent)	31
HW/MW (Non-TRU) Staging	-40	2 LLW-Drums	62
0' Waste Staging Location	0'	60 Drums, 10 SWBs, 30 B12/B25	15,880

As a waste container is issued (5-gallon pail, drum, SWB, B12/B25, etc) it is assumed to be full at that time with a bounding activity as determined by WCE. This is for inventory tracking purposes. Prior to shipment to WMAP for disposal, actual activities for the waste cuts will be determined and waste package contents adjusted as required. All waste packages will be verified to meet the requirements of the WSRC 1S Manual prior to shipment to WMAP.

10.0 WASTE PLANS, PROCEDURES, AND TRAINING

The NMM LLW and MW Certification Program Plan, the KAC TRU and MTRU Waste Certification Program Plan, the LLW/TRU waste procedures, the LLW/TRU waste training, etc. will all require revision to implement the details of the process described in this document. In addition, WCE personnel will develop the waste stream(s), distribution(s) and bounding activities for the various waste container types for characterization, inventory tracking and disposal purposes. The potential for beryllium and RCRA content will be addressed in the Waste Certification Program Plans (WCPP), procedures, training, and waste stream(s) development. These activities are to be completed prior to the generation of the first waste from the Plutonium Vitrification Facility. Established procedures and training will ensure that all waste handlers have the required security, radiological control, and waste qualifications (e.g., HRP, 2-person rule training, RWT, etc.). Lessons learned from the K Area Interim Surveillance (KIS) and the Container Surveillance and Storage Capability (CSSC) projects will be incorporated into the overall KAC waste program and specifically to the Plutonium Disposition Project where benefits would be gained.

Further details regarding the required sampling for the process waste and the overall process for the GFD-TRU will be determined, as well as any other final refinements to the Pu-Vit waste strategy and will be documented in this Waste Study. Developing requirements resulting from the evolving Pu-Vit process design will be accumulated and documented in future revisions of this study.

11.0 CHARACTERIZATION OF WASTE

Characterization of the D&R and Operational phases of the Plutonium Disposition Project will involve a variety of techniques. These will include, but are not limited to, process knowledge, sample & analysis, dose-to-cure (DTC), smear-to-curie (STC), nondestructive assay (NDA), and inline sampling (operational phase only) if possible. The constituents of concern for each phase include:

D&R: radionuclides, RCRA, PCBs, asbestos
Operational: radionuclides, RCRA, Be

Proper characterization of D&R waste during the planning stages is essential to success. The characterization determines the required packaging, labeling, and disposal facility. The packaging will impact the amount of size reduction required. In addition, proper characterization will ensure that all regulatory time clocks will be established and complied with in accordance with the appropriate regulations. The waste streams utilized for D&R waste are those already established for NMM process areas.

Proper characterization of the Operational process waste is equally important. There are potentially two key constituents of the process waste that must be characterized appropriately, beryllium and RCRA. Beryllium limits the amount of fissile material allowed in a waste container and RCRA institutes the 90 day clock within which waste must be shipped to the proper TSDF. Improper characterization of either could have severe consequences, such as receipt of Notices of Violation from the regulators, violations of the KAC or other facilities', DSA and/or TSR requirements, etc.

To assist with the process control of glass production via elemental analysis of the feeds, inline sampling will be conducted. The process sampling system can not be used to identify quantities of RCRA or Be due to the very low detection levels required. For this reason, WCE will need to determine an alternative sampling method for in-process waste to accurately characterize the waste.

The WCE will also utilize process knowledge backed by analysis to try to provide the facility with Go/No-Go levels of the Be and RCRA constituents to facilitate waste segregation. As information on the isotopic and impurity composition of the materials, to be processed through the Plutonium Vitrification Facility, become available, evaluations will be conducted to determine if this is a viable option to minimize the time and effort in the field.

12.0 ISSUES REQUIRING FURTHER INVESTIGATION/RESOLUTION

The following issues require further investigation or require information that is not yet available.

1. Green Fuel Disassembly: to minimize the size reduction required to make items fit into 5-gallon pails, larger items may be removed from the glovebox and placed directly into drums, SWBs or even B25s if determined LLW. MC&A requires assay to confirm if LLW or TRU waste. Issue is related to the definition of the assay equipment that will be required for large items and SWBs.

2. Anticipated Radiological Classification for Waste Management Areas: Confirm with RCO if WM areas will be RMA/RBA or if dress out required, especially in the TRU Waste Loading Room.. Also, can bagged items, even if potentially TRU be transported through facility on cart to a SWB if the SWB cannot be taken to each process area (in case of large equipment change out from glovebox).

3. GFD Process Procedure to Minimize TRU: Verify Green Fuel Disassembly process; how will the outer containers be removed from inner, nested for long term storage, and how likely will outer containers be clean vs. LLW.

4. Sample Method for RCRA Metals and Beryllium: Determine alternate method or process to obtain required analysis data on the RCRA metals and Beryllium constituents. Even if it is decided to categorize all TRU waste as MTRU with

Beryllium contamination, it is required by the 1S Manual to quantify the amounts of each of these constituents present in each waste container. Possibilities to explore include 1) sampling the waste itself and/or 2) obtaining a sample of the product material and sending to an outside laboratory for the required analysis.

5. GFD Sodium Contaminated DFAs: If DFAs with previous sodium exposure have not been adequately decontaminated, subsequent cutting of pins will result in, unoxidized sodium on cut or abraded surfaces. The sodium has unique fire/explosion related hazards that are not addressed as part of this study. In addition, waste contaminated with/containing pure Sodium metal, is highly reactive and considered a RCRA waste. If the pins are determined to be TRUW, there currently is no disposal path as Reactive RCRA wastes are currently prohibited from TRU Waste disposal per the WAC. If the pins are determined to be LLW from a radioactive standpoint, then disposal as MW is a potential pathway. If the pins are "treated" in KAC to remove the Sodium prior to processing, a RCRA permit may be required, which could impact larger permit issues. Further investigation by WMAP is being conducted. Additional information on amount of Sodium present on pins, the decontamination to be performed by Hanford, and number of pins involved is required.

13.0 CONCLUSION

The waste processes described within are the best estimation of how the Plutonium Disposition Project wastes, both from D&R and from Operations, will be handled based upon the information available at the time of the revision date of this Study. As the project evolves, lessons are learned from both KIS and CSSC, and the TRU waste program matures, the waste management flow path, requirements, and layout will to become more defined. As details and information regarding the other portions of the facility, that involve major impacts to the waste management processes described become available, they will be incorporated into future revisions of this Study.

14.0 REFERENCES

1. Y-ADS-G-00002, Alternative Study for Locating a Plutonium Vitrification Process in Existing Savannah River Site Process Facilities, June 8, 2004.
2. WSRC Manual 1S, Savannah River Site Waste Acceptance Criteria Manual, Procedure 3.06, "E-Area TRU Pads Transuranic Waste Acceptance Criteria", Revision 11, 4/30/05.
3. WSRC Manual 1S, Savannah River Site Waste Acceptance Criteria Manual, Procedure 3.17, "Low-Level Radioactive Waste Acceptance Criteria", Revision 9, 1/14/05.
4. SVP-OPD-2006-00003, Revision 0, Chemical Impurities in Candidate Alternate Feedstock Oxides for the MOX Fuel Fabrication Facility: 2006 Analysis Update, July 31, 2006.
5. U-CLC-K-00002, Revision 0, Pu-Vit CHAP Input, Confirmed Calculation, E.G. Estochen, November 2006.
6. 40 CFR 260-279, Hazardous Waste Management (Resource Conservation and Recovery Act) Regulations