PLUTONIUM DISPOSITION PROJECT (U)

Project M09A

SCOPE OF WORK

M-SOW-K-00022 Revision 0

for

Balance of Plant - Water Systems (U)

Originated by:	Anthony Edwards Mechanical Engineer	Date: 3/23/07
Reviewed by:	Arun Amin Principal Mechanical Engineer	Date: 3/23/2007
Approved by:	EC Zoffitt III for Clayton Holloway Mechanical Lead	Date: 3/23/07
Approved by:	Roderick King Electrical/I&C Lead	Date: 3/23/07
Approved by:	Ghada Elchoufi C/S/A Lead	Date: 3/23/07
Approved by:	Drew Negus Plant Design Lead	Date: 3-23-07
Approved by:	John Hammond Construction/CDI Lead	Date: 3-23-07
Approved by:	Shah for RS. Randy Sears Design Authority	Date: 3-23-07
Approved by:	FOR B.C. Patel Project Engineer	Date: 3-23-07

UNCLASSIFIED
DOES NOT CONTAIN UNCLASSIFIED
CONTROLLED NUCLEAR INFORMATION

DC/RO: EC Zoffitt III 3/23/07

Revision Page

Revision	Revision Date	Affected Section	Description of Change
0	3/23/07	N/A	Initial Revision

Table of Contents

Section Page

1.0 SCOPE 4
1.1 General Description 4
1.2 Background 4
2.0 ACRONYMS/ABBREVIATIONS 5
3.0 DESCRIPTION OF PHYSICAL WORK 6
3.1 Performance Category and Functional Classification (PS, GS) 6
3.2 Mechanical/Nuclear/Process 6
3.3 Instrumentation and Controls 11
3.4 Electrical 12
3.5 Plant Design 13
3.6 Civil/Structural/Architectural 14
4.0 ASSUMPTIONS 16
4.1 General Assumptions 16
4.2 Specific Assumptions 16
5.0 Technology Development Issues 17
6.0 REFERENCES 18
6.1 Drawing List 18
6.2 Design Input Documents 18
6.3 Applicable SRS & Industry Codes, Guides and Standards 19
6.4 Related Scopes of Work (SOW) 19
6.5 Miscellaneous 20
7.0 ATTACHMENTS 20
7.1 Attachment 7.1, Mechanical Bulk Material List 20
7.2 Attachment 7.2, Electrical/I&C Bulk Material List 20
7.3 Attachment 7.3, C/S/A Bulk Material List 20
7.4 Attachment 7.4, Master Equipment List 20
7.5 Attachment 7.5, Cut Sheet for Backflow Preventer 20
7.6 Attachment 7.6, Cut Sheet for Eyewash/Safety Shower Station 20
7.7 Attachment 7.7, Cut Sheet for Personnel Decon Shower 20

1.0 SCOPE

1.1 General Description

This Scope of Work (SOW) covers the water systems included in the Balance of Plant (BOP) for the Plutonium Disposition Project. BOP water systems include cooling tower water, chilled water, domestic water, service clarified water, and sanitary sewer. The newly installed domestic water, service clarified water and sanitary sewer systems will be supported by existing K-Area Complex facility systems. The cooling tower water and chilled water systems are completely new.

1.2 Background

The Office of Environmental Management has approximately 13 metric tons (MT) of plutonium in approximately 21 MT bulk materials without any defined disposition path. The Plutonium Disposition (PUD) Project is critical to meet the Department of Energy's strategic goal of providing a responsible resolution to the permanent disposal of the nation's excess high-level radioactive materials and waste; and to enable the cleanup of Environmental Management sites.

The Plutonium Disposition Facility (PDF) will be located at the K-Area Complex (KAC) to disposition up to approximately 13 Metric Tons (MT) of Environmental Management (EM) owned surplus plutonium. The facility will utilize a vitrification process to vitrify plutonium into a lanthanide borosilicate (LaBS) glass matrix. This glass will be packaged into bagless transfer cans and placed inside a Defense Waste Processing Facility (DWPF) type canister. The canister will be transported to DWPF and filled with High Level Waste (HLW) glass. The DWPF canisters will be stored in the Glass Waste Storage Buildings and later transported to the geologic repository at Yucca Mountain.

This Scope of Work (SOW) has been developed for the purpose of facilitating construction cost and schedule estimates for the Conceptual Design Report (CDR) on the PUD project. The input to this SOW was the approved technical baseline consisting of a Facility Design Description (FDD) and associated System Design Descriptions (SDD). Every intent has been made to assure alignment and consistency between this SOW and the appropriate sections of the technical baseline, in order to provide accurate estimates. This SOW is not a PUD technical baseline document. A more detailed description of the system can be found in the associated SDD listed in the reference section.

A **HOLD** is placed to identify information that is preliminary in nature, results from a design uncertainty, originates from insufficient documentation, needs verification, or identifies a discrepancy. A **TBD** is placed to identify places in the text where numeric values or descriptive information is not available at the time that the current revision of the SOW is released.

2.0 ACRONYMS/ABBREVIATIONS

AHU	Air Handling Unit
ANSI	American National Standards Institute
ASME	American Society of Mechanical Engineers
B&PVC	Boiler and Pressure Vessel Code
BOP	Balance of Plant
CHW	Chilled Water
C/S/A	Civil/Structural/Architectural
CTW	Cooling Tower Water
CDR	Conceptual Design Report
degF	Degrees Fahrenheit
DS	Design Services
DW	Domestic Water
DWPF	Defense Waste Processing Facility
ECF	Entry Control Facility
EM	Environmental Management
FDD	Facility Design Description
ft	feet
GPM	Gallons Per Minute
GS	General Services
HLW	High Level Waste
HVAC	Heating, Ventilation and Air Conditioning
ICS	Integrated Control System
ID	Inside Diameter
I/O	Input/Output
KAC	K-Area Complex
LaBS	Lanthanide BoroSilicate
lbs	pounds
MT	Metric Ton
NDA	NonDestructive Assay
NFPA	National Fire Protection Association
P&ID	Piping & Instrumentation Diagram
PC	Performance Category
PDF	Plutonium Disposition Facility
PFD	Process Flow Diagram
PIDAS	Perimeter Intrusion Detection and Assessment System
PS	Production Support
PU	Plutonium
PUD	Plutonium Disposition
PuVit	Plutonium Vitrification
SANS	Sanitary Sewer
SC	Safety Class
SCDHEC	South Carolina Department of Health & Environmental Control
SCW	Service Clarified Water
SDD	System Design Description
SOW	Scope Of Work
SRS	Savannah River Site
SSC	Structure, System, Component
TBD	To Be Determined
TDH	Total Developed Head
UL	Underwriters Laboratory
VFD	Variable Frequency Drive
WSRC	Washington Savannah River Company

3.0 DESCRIPTION OF PHYSICAL WORK

3.1 Performance Category and Functional Classification (PS, GS)

3.1.1 Performance Category

The performance category for all BOP water systems included in this scope of work is PC-2 (Ref. G-TC-K-00002).

3.1.2 Functional Classification

The systems in this SOW shall be designed in accordance with the requirements of WSRC Manual WSRC-E7, Conduct of Engineering and Technical Support Procedure 2.25 Rev 14, "Functional Classification", as follows (Ref. G-TC-K-00002):

A. Cooling Tower Water: Functional Classification – Production Support (PS)

B. Chilled Water: Functional Classification – Production Support (PS)

C. Domestic Water: Functional Classification – Production Support (PS)

D. Service Clarified Water: Functional Classification – Production Support (PS)

E. Sanitary Sewer System: Functional Classification – General Services (GS)

3.2 Mechanical/Nuclear/Process

3.2.1 *Chilled Water System*

The chilled water system is a closed loop system that provides cooling for the following services:

A. Process Area AHUs (HVAC-AHU-001, HVAC-AHU-002, HVAC-AHU-003)

B. NDA Equipment AHU (HVAC-AHU-004)

C. ECF AHU (HVAC-AHU-005)

D. Canister/Magazine Loading Area AHU (HVAC-AHU-006)

E. Oxidation/Milling & Mixing Heat Exchanger (CHW-HX-001)

F. Vitrification Melter Heat Exchanger (VIT-HTEX-001)

3.2.1.1 Chilled Water System Components - Refer to M-M6-K-02312 & M-M6-K-02313 for the P&ID for the chilled water system. The major components of the chilled water system are:

A. Chillers (3 each)

B. Chilled Water Pumps (5 each)

C. Expansion Tank (1 each)

D. Air Separator (1 each)

E. Chemical Feed Tank (1 each)

F. Heat Exchanger (1 each)

G. Piping/Valves (See Att. 7.1 for Valve Bulk Material Quantities)

3.2.1.2 Chillers (CHW-CHU-001, CHW-CHU-002, CHW-CHU-003)

Each of the three chillers shall be a water-cooled, centrifugal chiller rated for 300 Tons of cooling capacity. Each chiller shall be a packaged unit that includes compressors, compressor motors, condenser, evaporator, motor starters, instruments, and microprocessor based control system with local control panel. Motors shall include VFDs. Reference M-DS-K-00137.

A refrigerant recovery system shall be provided with the three chillers. The refrigerant recovery system shall include a compressor, a storage tank, and interconnecting piping.

3.2.1.3 Chilled Water Pumps (CHW-P-001, CHW-P-002, CHW-P-003, CHW-P-004, CHW-P-005)

Each of the three chilled water pumps (CHW-P-001, 002, 003) shall be base mounted, single stage, end suction centrifugal pumps capable of pumping 725 gpm @ 170 ft TDH. Each pump shall be provided complete with baseplate, motor, and flexible coupling. Reference M-DS-K-00138.

Each of the two chilled water pumps (CHW-P-004, CHW-P-005) shall be a centrifugal, canned motor pump capable of pumping approximately 30 gpm @ 40 psi. Reference M-DS-K-00151.

3.2.1.4 Expansion Tank (CHW-VSL-001)

The expansion tank shall be an ASME B&PVC Section VIII vessel fitted with a heavy-duty, butyl rubber bladder. Tank volume shall be approximately 100 gallon. Reference M-DS-K-00143.

3.2.1.5 Air Separator (CHW-VSL-002)

The tangential, centrifugal type air separator shall be an ASME B&PVC Section VIII vessel. The air separator shall be able to remove air from a chilled water flow rate of 1450 gpm. Reference M-DS-K-00144.

3.2.1.6 Chemical Feed Tank (CHW-VSL-003)

The chemical feed tank shall be a by-pass, chemical shot feeder type of chemical feed tank that is constructed to the requirements of ASME B&PVC Section VIII. Tank volume shall be five gallons. Reference M-DS-K-00145.

3.2.1.7 Heat Exchanger (CHW-HTEX-001)

The heat exchanger shall be a shell and tube type exchanger capable of cooling approximately 30 gpm of water from 60 degF to 55 degF. Ref. M-DS-K-00150.

3.2.1.8 Piping

Piping material is designated by a "P-code" designation from SRS Document WSRC-IM-95-58. The piping material will be threaded, welded or utilize flange fittings.

3.2.2 *Cooling Tower Water System*

The cooling tower water system is an open loop system that provides cooling for the following services:

A. CHW System Chillers (CHW-CHU-001, CHW-CHU-002, CHW-CHU-003)

3.2.2.1 Cooling Tower Water System Components - Refer to M-M6-K-02314 for the P&ID for the cooling tower water. The major components of the cooling tower water system are:

A. Cooling Tower Cells (3 each)

B. Cooling Tower Water Pumps (3 each)

C. Ozone Treatment System (1 each)

D. Piping/Valves (See Att. 7.1 for Valve Bulk Material Quantities)

3.2.2.2 Cooling Tower Cells (CTW-CTW-001, CTW-CTW-002, CTW-CTW-003)

The cooling tower shall be an induced draft, cross-flow type, factory assembled cooling tower that includes three independently operating cells. Each of the three cells shall cool 900 gpm of water from 95 degF to 85 degF. Each cell of the cooling tower shall be equipped with an UL listed control system. Fan motors shall be furnished with VFDs. Reference M-DS-K-00139.

3.2.2.3 Cooling Tower Water Pumps (CTW-P-001, CTW-P-002, CTW-P-003)

Each of the three cooling tower water pumps shall be base mounted, single stage, end suction centrifugal pumps capable of pumping 900 gpm @ 60 ft. TDH. Each pump shall be provided complete with baseplate, motor, and flexible coupling. Reference M-DS-K-00140.

3.2.2.4 Ozone Treatment System (CTW-MIX-001)

The ozone treatment system shall include ozone generator, ozone pump, oxygen concentrator, oxygen receiver tank, control panel, data recorder, and conductivity controller. The system shall also include all interconnecting piping and wiring. The ozone treatment system shall be capable of conditioning a cooling water flow rate of 1800 gpm. Reference M-DS-K-00141.

3.2.2.5 Piping

Piping material is designated by a "P-code" designation from SRS Document WSRC-IM-95-58. The piping material will be welded, threaded or utilize flange fittings.

3.2.3 *Domestic Water System*

The domestic water system shall be connected to the existing KAC domestic water system where the existing piping enters the PuVit Facility building. The new domestic water piping shall provide domestic water to the following services:

A. Eyewash/Safety Shower Stations

B. Personnel Decon Shower

C. Change Room/Restroom Facility Fixtures (ECF)

D. Trailer Offices Outside of PIDAS

E. Admin Building Fixtures

F. Service Clarified Water System (SCW system is fed by DW)

3.2.3.1 Domestic Water System Components – The major components of the domestic water system are:

A. Eyewash/Safety Shower Station (8 each)

B. Personnel Decon Shower (1 ea)

C. Backflow Preventer (5 ea)

D. Piping/Valves (See Att. 7.1 for Valve Bulk Material Quantities)

3.2.3.2 Eyewash/Safety Shower Station (See Attachment 7.5 for Cut Sheet)

The eight eyewash/safety shower stations shall meet the requirements of ANSI Z358.1-2004 and shall include a green light.

3.2.3.3 Personnel Decon Shower (See Attachment 7.6 for Cut Sheet)

The personnel decon shower shall be American Shower & Bath Model CLP-32 or equivalent.

3.2.3.4 Backflow Preventer (See Attachment 7.5 for Cut Sheet)

The five backflow preventers shall meet the requirements of SCDHEC Regulation R.61-58, Primary Drinking Water Regulations. The backflow preventers shall be Watts 909 or equivalent. Estimated sizes of required backflow preventers are:

Backflow Preventer Size	Quantity
¾"	1
1-1/2"	2
2"	2

3.2.3.5 Piping

Piping material is designated by a "P-code" designation from SRS Document WSRC-IM-95-58. The piping material will be welded, threaded or utilize flange fittings.

3.2.4 *Service Clarified Water System*

The service clarified water system will be supplied by and connected to the newly installed domestic water system. The service clarified water system shall provide water to the following services:

A. Make-Up Water for Chilled Water System

B. Make-Up Water for Cooling Tower Water System

C. Service water to AHU humidifiers.

D. Make-Up Water for Oxidation/Milling & Mixing Chilled Water System

E. Make-Up Water for the Disassembly Basin (Existing Service)

F. Make-Up Water to KAC CHW System (Existing Service)

3.2.4.1 Service Clarified Water System Components – The major components of the service clarified water system are:

A. Piping/Valves (See Att. 7.1 for Valve Bulk Material Quantities)

3.2.4.2 Piping

Piping material is designated by a "P-code" designation from SRS Document WSRC-IM-95-58. The piping material will be welded, threaded or utilize flange fittings.

3.2.5 *Sanitary Sewer System*

The sanitary sewer system shall provide service to the following:

A. New Admin. Building

B. Trailer Offices outside of PIDAS

C. ChangeRoom/Restroom Facility (ECF)

3.2.5.1 Sanitary Sewer System – The major components of the sanitary sewer system are:

A. Piping/Valves (See Att. 7.1 for Piping & Valve Bulk Material Quantities)

3.2.5.2 Piping

Piping material is designated by a "P-code" designation from SRS Document WSRC-IM-95-58. The piping material will be welded, threaded or utilize flange fittings.

3.3 Instrumentation and Controls

3.3.1 *Chilled Water System*

The chilled water system shall be controlled by a PLC (CHW-CAB-510) that shall be installed inside of the new chiller building. A serial link will be provided with the PLC for communication to the ICS. The ICS will monitor and provide supervisory control to the chilled water system. The chilled water system shall use I/O cabinet CHW-CAB-500 and instrument cabinet CHW-INST-100. Control requirements and detailed information are provided in the control block diagram J-J8-K-00031 and the logic description J-J2-K-01556. Control requirements for the Milling & Mixing/Oxidation process chilled water system are provided in J-J8-K-00028. Refer to Attachment 7.2 for I&C related bulk cable and raceway material listing.

3.3.1.1 Chillers (CHW-CHU-001, CHW-CHU-002, CHW-CHU-003)

The chillers are served by the following instruments:

A. Evaporator Inlet Temperature Transmitter (3 ea)
B. Evaporator Outlet Temperature Transmitter (3 ea)
C. Evaporator Flow Transmitter (3 ea)
D. Condenser Outlet Temperature Transmitter (3 ea)
E. Condenser Low Flow Switch (3 ea)
F. Evaporator Inlet Valve with Actuator/ 2 Position Switches (3 ea)
G. Condenser Outlet Valve with Actuator/ 2 Position Switches (3 ea)
H. Local Pressure Gauges (12 ea)

3.3.1.2 Chilled Water Pumps (CHW-P-001, CHW-P-002, CHW-P-003)

The chilled water pumps are served by the following instruments:

A. Pump Controls (3 ea)
B. Flow Transmitter (3 ea)
C. Local Pressure Gauges (6 ea)

3.3.1.3 Chilled Water System – General

The chilled water system is served by the following instruments:

A. Three-Way Temperature Control Valve with Actuator/2 Position Switches (4 ea)
B. Pressure Relief Valves (5 ea)
C. Local Level Indicator (2 ea)
D. Local Pressure Gauge (3 ea)
E. Pressure Transmitter (1 ea)
F. Temperature Transmitter (1 ea)

3.3.1.4 Chilled Water Pumps (CHW-P-004, CHW-P-005)

The pumps are served by the following instruments:

A. Flow Transmitter (1 ea)
B. Pump Controls (2 ea)
C. Pressure Transmitter (1 ea)
D. Pressure Relief Valve (1 ea)

3.3.2 *Cooling Tower Water System*

The cooling water tower system shall be controlled by the chilled water system PLC (CHW-CAB-510). Reference section 3.3.1 for additional information on PLC. The cooling tower water system uses I/O cabinet CTW-CAB-500 and instrument cabinet CTW-INST-100. Refer to Attachment 7.2 for I&C bulk material list.

3.3.2.1 Cooling Tower Cells (CTW-CTW-001, CTW-CTW-002, CTW-CTW-003)

The cooling tower cells are served by the following instruments:

A. Cooling Fan VFD (3 ea)
B. Low Level Switch (3 ea)
C. Temperature Transmitter (5 ea)
D. Tower Water Inlet Valve with Actuator/2 Positions Switches (3 ea)

In addition to the instruments listed above, there is one temperature transmitter on the inlet water header to the three cooling tower cells.

3.3.2.2 Cooling Tower Water Pumps (CTW-P-001, CTW-P-002, CTW-P-003)

The cooling tower water pumps are served by the following instruments:

A. Pump Controls (3 ea)
B. Flow Transmitter (3 ea)
C. Local Pressure Gauge (6 ea)

3.4 Electrical

3.4.1 *Chilled Water System*

Refer to E-E2-K-02234 & E-E2-K-02235 for the single line diagrams for the chilled water system. The electrical work required for installation of the major components of the chilled water system is as follows:

3.4.1.1 Chillers (CHW-CHU-001, CHW-CHU-002, CHW-CHU-003)

Supply power to chillers CHW-CHU-001 & CHW-CHU-002 from unit substation ELNH-USS-001C, BUS A, breakers 2A and 2B. Supply power to chiller CHW-CHU-003 from unit substation ELNH-USS-001C, BUS B, breakers 4B.

3.4.1.2 Chilled Water Pumps (CHW-P-001, CHW-P-002, CHW-P-003, CHW-P-004, CHW-P-005)

Supply power to chilled water pumps CHW-P-001 & CHW-P-003 from motor control center ELNH-MCC-001C, cubicles 3B & 4F. Supply power to chilled water

pump CHW-P-002 from motor control center ELNH-MCC-002C, cubicle 1A. Supply power to CHW-P-004 from motor control center ELNH-MCC-24M, cubicle 2E. Supply power to CHW-P-005 from motor control center ELNH-MCC-31M, cubicle 2E.

3.4.2 *Cooling Water System*

Refer to E-E2-K-02234 & E-E2-K-02235 for the single line diagrams for the cooling tower water system. The electrical work required for installation of the major components of the cooling tower water system is as follows:

3.4.2.1 Cooling Tower Cells (CTW-CTW-001, CTW-CTW-002, CTW-CTW-003)

Supply power to cooling tower fans for CTW-CTW-001 & CTW-CTW-002 from motor control center ELNH-MCC-001C, cubicles 2A & 2K. Supply power to cooling tower fan for CTW-CTW-003 from motor control center ELNH-MCC-002C, cubicle 2J.

Feed cooling tower water heaters for CTW-CTW-001, CTW-CTW-002, CTW-CTW-003 from motor control centers ELNH-MCC-001C & ELNH-MCC-002C as shown on E-E2-K-02235

3.4.2.2 Cooling Tower Water Pumps (CTW-P-001, CTW-P-002, CTW-P-003)

Supply power to cooling tower water pump CWS-P-001 from motor control center ELNH-MCC-001C, cubicle 3D. Supply power to cooling tower water pumps CWS-P-002 & CWS-P-003 from motor control center ELNH-MCC-002C, cubicles 3G & 3K.

3.4.2.3 Ozone Treatment System (CTW-MIX-001)

Supply power to ozone treatment system CTW-MIX-001 from motor control center ELNH-MCC-001C, cubicle 1G. Supply power to ozone treatment system pump CTW-P-004 (included in ozone treatment system) from motor control center ELNH-MCC-001C, cubicle 4H.

3.4.3 *Miscellaneous*

Provide and install junction boxes, power outlets, conduits and cables for the equipment described in 3.4.1.1 thru 3.4.2.3.

Refer to Attachment 7.2 for electrical cable and raceway material listing.

3.5 Plant Design

3.5.1 Piping bulk material quantities are contained in the following isometric sketches:

Chilled Water System	SK-DE-ISO-0005, 0006, 0007, 0008, 0009, 0015, 0016, 0017, 0018, 0019, 0020, 0027, 0028, 0032, 0033, 0034, 0037, 0048, 0049
Cooling Tower Water System	SK-DE-ISO-0021, 0022, 0023, 0024, 0025, 0026, 0029, 0030, 0031
Domestic Water System	SK-DE-ISO-0013, 0036, 0050
Service Water System	N/A (piping included in domestic water isometrics)
Sanitary Sewer System	N/A (See Att. 1 for estimated piping quantities)

3.6 Civil/Structural/Architectural

3.6.1 *Chilled Water System*

The C/S/A scope of work required for installation of the major components of the chilled water system is as follows:

3.6.1.1 Chillers (CHW-CHU-001, CHW-CHU-002, CHW-CHU-003)

The chillers shall be located inside of the new chiller building which shall be constructed outside of the PIDAS. Each of the three chillers is expected to have dimensions of 15' L x 4' W x 6' H and will weigh approximately 15,000 lbs. Each chiller shall be provided with four 8" x 8" base plates that include 1-1/8" diameter bolt holes for anchoring chiller to concrete floor. One inch diameter Maxi-Bolts shall be used to anchor the chillers. Alternatively, cast-in-place anchors with grout sleeves or Hilti Kwik Bolt-TZ are acceptable for anchoring items.

3.6.1.2 Chilled Water Pumps (CHW-P-001, CHW-P-002, CHW-P-003)

The chilled water pumps shall be located outside of the new chiller building which shall be constructed outside of the PIDAS. Each of the three chilled water pumps is a base mounted pump with an approximate footprint size of 16" x 50" and an approximate weight of 700 lbs. Each pump shall be anchored to the concrete with ½"-diameter Maxi-Bolts. Alternatively, cast-in-place anchors with grout sleeves or Hilti Kwik Bolt-TZ are acceptable for anchoring items.

3.6.1.3 Chilled Water Pumps (CHW-P-004, CHW-P-005)

The chilled water pumps shall be located inside of the Mechanical Equipment Room 2, on the -20 elevation of the existing KAC building. Each of the two chilled water pumps has an approximate footprint size of 8" x 16" and an approximate weight of 150 lbs. Each pump shall be anchored to the concrete floor with ½"-diameter Maxi-Bolts. Alternatively, cast-in-place anchors with grout sleeves or Hilti Kwik Bolt-TZ are acceptable for anchoring items.

3.6.1.4 Expansion Tank (CHW-VSL-001)

The chilled water expansion tank shall be located outside of the new chiller building which shall be constructed outside of the PIDAS. The expansion tank shall be approximately 24"-diameter x 65" high, and shall weigh approximately 1200 lbs. The tank shall be installed vertically. The tank shall be mounted on three integral base clips that shall be anchored to the concrete with ½"-diameter Maxi-Bolts. Alternatively, cast-in-place anchors with grout sleeves or Hilti Kwik Bolt-TZ are acceptable for anchoring items.

3.6.1.5 Air Separator (CHW-VSL-002)

The air separator is located outside of the new chiller building which shall be constructed outside of the PIDAS. The air separator has three integral support lugs and weighs approximately 2000 lbs. It shall be supported on 2"-diameter pipe legs. Each pipe leg shall be attached to the air separator lifting lug, and shall be fitted with a 12" x 12" x 3/4" steel base plate. The air separator shall be anchored to the concrete with ½"-diameter Maxi-Bolts. Alternatively, cast-in-place anchors with grout sleeves or Hilti Kwik Bolt-TZ are acceptable for anchoring items.

3.6.1.6 Chemical Feed Tank (CHW-VSL-003)

The chemical feed tank is located inside of the new chiller building which shall be constructed outside of the PIDAS. The tank shall be large enough to hold a volume of approximately five gallons, and shall weigh approximately 100 lbs. The tank shall be supported on three legs, provided with the tank, and shall be anchored to the concrete with ½"-diameter Maxi-Bolts. Alternatively, cast-in-place anchors with grout sleeves or Hilti Kwik Bolt-TZ are acceptable for anchoring items.

3.6.1.7 Heat Exchanger (CHW-HTEX-001)

The heat exchanger shall be located inside of the Mechanical Equipment Room 2, on the -20 elevation of the existing KAC building. The heat exchanger shall be approximately 6"-diameter x 40" length, and shall weigh approximately 100 lbs. The heat exchanger shall be supported on two integral mounting feet, and shall be anchored to the concrete with ½"-diameter Maxi-Bolts. Alternatively, cast-in-place anchors with grout sleeves or Hilti Kwik Bolt-TZ are acceptable for anchoring items.

3.6.1.8 Underground Piping

Excavation and backfill is required for installation of 2 – 12" diameter chilled water pipes from the newly constructed chiller building to the existing KAC facility. The two 12" diameter lines will run parallel to one another and the excavation shall be approximately 850 ft. in length.

3.6.2 *Cooling Tower Water System*

The C/S/A scope of work required for installation of the major components of the cooling tower water system is as follows:

3.6.2.1 Cooling Tower Cells (CW-CTW-001, CTW-CTW-002, CTW-CTW-003)

The three cooling tower cells shall be located outside of the new chiller building which shall be constructed outside of the PIDAS. The total weight of the three cells is approximately 27,000 lbs. Each cell is approximately 12' W x12 L x17.5' H, and each cell shall be bolted to W6x25 steel beams with 5/8"-diameter bolts. Steel plates (12" x12" x3/4") shall be welded to each of the W6x25 beams, and shall be anchored to the concrete with ¾"-diameter Maxi-Bolts. Alternatively, cast-in-place anchors with grout sleeves or Hilti Kwik Bolt-TZ are acceptable for anchoring items.

3.6.2.2 Cooling Tower Water Pumps (CTW-P-001, CTW-P-002, CTW-P-003)

The three cooling water pumps shall be located outside of the new chiller building which shall be constructed outside of the PIDAS. Each of the three cooling water pumps is a base mounted pump with an approximate footprint size of 16" x 50" and an approximate weight of 700 lbs. Each pump shall be anchored to the concrete with ½"-diameter Maxi-Bolts. Alternatively, cast-in-place anchors with grout sleeves or Hilti Kwik Bolt-TZ are acceptable for anchoring items.

3.6.2.3 Ozone Treatment System (CTW-MIX-001)

The ozone treatment system shall be located inside of the new chiller building which will be constructed outside of the PIDAS. The system is assumed to be a

skid packaged unit having dimensions of 4' W x4' L x5' H and a weight of 1000 lbs. The system is expected be supplied with four base plates for anchoring the ozone treatment system to the concrete. The ozone treatment system shall be anchored to the concrete with 1"-diameter Maxi-Bolts. Alternatively, cast-in-place anchors with grout sleeves or Hilti Kwik Bolt-TZ are acceptable for anchoring items.

3.6.3 *Domestic Water & Sanitary Sewer – Underground Piping*

Trailer Offices: An underground 4" diameter sanitary sewer drain line shall be required from the new Trailer Offices and tied into an existing SANS line oriented north-south at approximately 200 ft. west of the new offices. An underground 1" diameter domestic water line shall be required from the new Trailer Offices and ties into an existing domestic water line located approximately 200 ft. to the west.

3.6.4 *General*

All piping of 2 inch diameter or less shall be supported per C-CH-G-00004.

All electrical commodities shall be supported per C-CI-G-0039.

Refer to Attachment 7.3 for C/S/A bulk material list.

Concrete work and chiller building installation is included in C-SOW-K-00010.

4.0 ASSUMPTIONS

4.1 General Assumptions

4.1.1 The Construction Agency will be the SRS Construction Group. DS will provide engineering documentation for the installation of this equipment and will rely on the use of SRS Guides and Standards.

4.1.2 SRS Construction Group will procure all bulk materials.

4.1.3 SRS Construction Group will procure all off-the-shelf components and equipment identified on engineering data sheets that do not require testing or quality documentation.

4.2 Specific Assumptions

4.2.1 *Instrumentation and Controls*

No specific assumptions have been made.

4.2.2 *Electrical*

4.2.2.1 Existing power distribution system located in 151-1K has enough capacity for the proposed new chiller plant and other project M09A loads.

4.2.2.2 All lighting and telecommunications related modifications shall be covered in other scope(s) of work.

4.2.2.3 Interface wiring for tie-ins to KAC PA, plant communications and integrated control system shall be routed within new direct buried raceway that is installed along route of new chilled water lines from chiller building to KAC facility.

4.2.3 *Plant Design*

No specific assumptions have been made.

4.2.4 *Mechanical*

4.2.4.1 The existing KAC Facility sanitary sewer system has sufficient capacity to meet both the existing KAC facility sanitary sewer demands and the new PuVit Facility sanitary sewer demands.

4.2.4.2 The existing KAC facility domestic water system has sufficient capacity to meet both the new domestic water demands of the PuVit Facility and the existing domestic water demands of the KAC facility.

4.2.4.3 All vessels with an ID 6" or greater shall be per ASME B&PVC Section VIII, Division 1 code stamped or an approved waiver. An appropriate SRS verification record will be competed for each vessel and pressure protection device (disk or valve).

4.2.4.4 As allowed by the P-Codes, socket welded piping is acceptable.

4.2.4.5 All piping will be per ASME B31.3.

4.2.5 *Civil/Structural/Architectural*

4.2.5.1 Core drills for routing commodities through wall or floor of the KAC will be covered in C-SOW-K-00009.

4.2.5.2 Assume that Hilti Kwik Bolt-TZ anchors are acceptable for use based upon initial evaluation of Awareness Memo 122, AM-122.

4.2.5.3 The material for all the base plates and structural steel components shall be Galvanized Carbon Steel.

4.2.5.4 The standard pipe hanger components such as pipe clamps, threaded rods, upper attachments etc. are catalog items by any hanger manufacturers like Cooper B-Line, ITT Grinnell etc.

4.2.5.5 The newly constructed chiller building shall have TOC elevation of 260'- 0", and the height of the building shall be20 ft. (max.).

4.2.5.6 Functional classification of drilling holes in KAC concrete surfaces is SC.

5.0 Technology Development Issues

There are currently no technology issues for the CHW, CTW, DW, SCW, and SANS systems.

6.0 REFERENCES

6.1 Drawing List

6.1.1 *PUD Project Drawings & Sketches*

6.1.1.1 M-M5-K-01959, Rev C, Chilled Water & Cooling Tower Water Systems PFD
6.1.1.2 M-M5-K-01962, Rev B, Milling & Mixing/Oxidation Heat Exchanger PFD
6.1.1.3 M-M6-K-02312, Rev A, Chilled Water System P&ID
6.1.1.4 M-M6-K-02313, Rev A, Chilled Water System P&ID
6.1.1.5 M-M6-K-02314, Rev B, Cooling Tower Water System P&ID
6.1.1.6 M-M6-K-02291, Rev A, Milling & Mixing/Oxidation Heat Exchanger P&ID
6.1.1.7 M-DS-K-00137, Rev A, Chiller Data Sheet
6.1.1.8 M-DS-K-00138, Rev A, Chilled Water Pump Data Sheet
6.1.1.9 M-DS-K-00139, Rev A, Cooling Tower Data Sheet
6.1.1.10 M-DS-K-00140, Rev A, Cooling Water Pump Data Sheet
6.1.1.11 M-DS-K-00141, Rev A, Ozone Treatment System Data Sheet
6.1.1.12 M-DS-K-00143, Rev A, Expansion Tank Data Sheet
6.1.1.13 M-DS-K-00144, Rev A, Air Separator Data Sheet
6.1.1.14 M-DS-K-00145, Rev A, Chemical Feed Tank Data Sheet
6.1.1.15 M-DS-K-00150, Rev B, Milling & Mixing/Oxidation Cooling Water Heat Exchanger
6.1.1.16 M-DS-K-00151, Rev B, Milling & Mixing/Oxidation Cooling Water Pump
6.1.1.17 J-J8-K-00031, Rev. A, Chilled Water System Control Block Diagram
6.1.1.18 J-J8-K-00028, Rev. B, Milling & Mixing System Control Block Diagram
6.1.1.19 J-J2-K-01556, Rev. A, Chilled Water Logic Diagram
6.1.1.20 E-E2-K-02234, Rev. B, Central Chilled Water Plant Unit Substation Single Line Diagram
6.1.1.21 E-E2-K-02235, Rev. C, Central Chilled Water Plant 480V MCC Single Line Diagram
6.1.1.22 E-E2-K-02229, Rev. D, Milling/Mixing and Vitrification MCC ELNH-MCC-24M Single Line Diagram
6.1.1.23 E-E2-K-02230, Rev. D, Milling/Mixing and Vitrification MCC ELNH-MCC-31M Single Line Diagram

6.1.2 *Existing Savannah River Site (SRS) Drawings*

6.1.2.1 C-CH-G-00004, Rev. 0, Routing & Supports for NPS 2" and Smaller Piping
6.1.2.2 C-CI-G-0039, Rev. 0, Electrical Raceway & Equipment Supports

6.2 Design Input Documents

The following Facility Design Description and System Design Descriptions are the baseline documents used to develop this SOW.

6.2.1 *Facility Design Description*

6.2.1.1 G-FDD-K-00001, Rev B, "PUV Facility Design Description"

6.2.2 *Task Requirements and Criteria*

6.2.2.1 G-TC-K-00002, Rev. A, Existing KAC System Modifications

6.3 Applicable SRS & Industry Codes, Guides and Standards

6.3.1 *Industry Codes and Standards*

6.3.1.1 ASME B31.3, 2006 - Chemical Plant and Petroleum Refinery Piping
6.3.1.2 ASME Boiler and Pressure Vessel Code, Sect. VIII, Div. 1, 2006
6.3.1.3 NFPA 70, 2005 – National Electrical Code

See Functional Design Description and System Design Descriptions References 2.2.1.1, 2.2.2.1, 2.2.2.2, and 2.2.2.3 for more codes and standards.

6.3.2 *SRS Guides & Standards*

6.3.2.1 WSRC-IM-95-58, Guide 15980-G, Rev. 3, Installation and Calibration of Instruments
6.3.2.2 WSRC-TM-95-1, Standard 15980, Rev. 6, "Mechanical Installation of Safety Class and Safety Significant Instrumentation"
6.3.2.3 WSRC-IM-95-58, Guide 15060-G, Rev. 5, "Application of ASME B31.3"
6.3.2.4 WSRC-IM-95-58, Guide 15020-G, Rev. 2, "Installation of Mechanical Equipment"
6.3.2.5 WSRC-TM-95-1, Standard 03010, Rev. 1, Coring, Chipping, and Drilling in Concrete
6.3.2.6 WSRC-TM-95-1, Standard 05057, Rev. 1, Control of Welding
6.3.2.7 WSRC-IM-95-58, Guide 03251-G, Rev. 1, Concrete Anchors
6.3.2.8 WSRC-IM-95-58, Guide 03252-G, Rev. 1, Installation and Testing of Concrete Anchors
6.3.2.9 WSRC-IM-95-58, Guide 16051-G, Rev. 2, Installation of Electrical Raceway and Cable Tray
6.3.2.10 WSRC-IM-95-58, Guide 16052-G, Rev. 3, Installation of Electrical Wires, Cables, and Terminations
6.3.2.11 WSRC-IM-95-58, Guide 16053-G, Rev. 2, Installation of Electrical Equipment
6.3.2.12 WSRC-IM-95-58, Guide 16056-G, Rev. 2, Installation of Grounding Systems

6.4 Related Scopes of Work (SOW)

6.4.1 M-SOW-K-00011, Rev 0, Vitrification Scope of Work – The CHW system provides cooling for the Vitrification cooling water system.

6.4.2 M-SOW-K-00014, Rev 0, Milling & Mixing Scope of Work – The CHW system provides cooling for the milling & mixing/oxidation systems.

6.4.3 M-SOW-K-00019, Rev 0, Metal Oxidation Scope of Work – The CHW system provides cooling for the milling & mixing/oxidation systems.

6.4.4 M-SOW-K-00020, Rev 0, HVAC System Scope of Work – The CHW system removes heat from the HVAC air handling units. The SCW system provides water to the AHU humidifiers.

6.4.5 J-SOW-K-00002, Rev 0, ICS Scope of Work

6.4.6 E-SOW-K-00017, Rev. 0, Electrical General Scope of Work

6.4.7 C-SOW-K-00009, Rev 0, SOW for Structural & Architectural Modifications for Process Building

6.4.8 C-SOW-K-00010, Rev 0, C/S/A SOW for Buildings Outside of the PIDAS

6.5 Miscellaneous

6.5.1 M&O-NMM-2006-00101, Plant Support System Assessment (Mechanical) for the Plutonium Disposition Project

7.0 ATTACHMENTS

7.1 Attachment 7.1, Mechanical Bulk Material List

7.2 Attachment 7.2, Electrical/I&C Bulk Material List

7.3 Attachment 7.3, C/S/A Bulk Material List

7.4 Attachment 7.4, Master Equipment List

7.5 Attachment 7.5, Cut Sheet for Backflow Preventer

7.6 Attachment 7.6, Cut Sheet for Eyewash/Safety Shower Station

7.7 Attachment 7.7, Cut Sheet for Personnel Decon Shower

ATTACHMENT 7.1 (sheet 1 of 2)

Mechanical Bulk Material List

Valves

CHILLED WATER SYSTEM				
Item No	**Description**	**Size**	**Manual/Auto**	**Quantity**
1	Butterfly Valve	8"	Manual	9 ea
2	Gate Valve	2"	Manual	36 ea
3	Butterfly Valve	12"	Manual	2 ea
4	Gate Valve	12"	Manual	2 ea
5	Gate Valve	1"	Manual	12 ea
6	Butterfly Valve	8"	Automatic	3 ea
7	Circuit Setter Valve	8"	Manual	3 ea
8	Triple Duty Valve	8"	Manual	3 ea
9	Three-Way PCV/TCV	2"	Manual	3 ea
10	Three-Way PCV/TCV	2"	Automatic	5 ea
11	Check Valve	2"	Manual	2 ea

COOLING TOWER WATER SYSTEM				
Item No	**Description**	**Size**	**Manual/Auto**	**Quantity**
1	Butterfly Valve	8"	Manual	15 ea
2	Butterfly Valve	8"	Automatic	6 ea
3	Triple Duty Valve	8"	Manual	3 ea
4	Butterfly Valve	12"	Manual	2 ea
5	Ball Valve	2"	Manual	4 ea
6	Gate Valve	2"	Manual	9 ea
7	Butterfly Valve	2"	Manual	3 ea
8	Gate Valve	1-1/2"	Manual	4 ea

DOMESTIC WATER SYSTEM				
Item No	**Description**	**Size**	**Manual/Auto**	**Quantity**
1	Gate Valve	2"	Manual	10 ea
2	Gate Valve	3"	Manual	1 ea
3	Gate Valve	6"	Manual	1 ea

ATTACHMENT 7.1 (sheet 2 of 2)

Mechanical Bulk Material List

Valves (continued)

SERVICE CLARIFIED WATER SYSTEM				
Item No	Description	Size	Manual/Auto	Quantity
1	Gate Valve	2"	Manual	4 ea

SANITARY SEWER SYSTEM				
Item No	Description	Size	Manual/Auto	Quantity
1	Gate Valve	4"	Manual	2 ea

Piping

SANITARY SEWER SYSTEM			
Item No	Description	Size	Quantity
1	PVC	4"	300 ft

DOMESTIC WATER SYSTEM			
Item No	Description	Size	Quantity
1	PVC	1"	200 ft

This is in addition to domestic water shown on isometrics referenced in section 3.5.1 of this document.

ATTACHMENT 7.2 (sheet 1 of 6)

Electrical / I&C Bulk Material List

Scope Set: BOP - WATER SYSTEMS

Prepared By: S. C. Shah

Date: 3/23/07

Reviewed By: [illegible]

Exterior Glovebox Cables

Sum of Qty XGB (ft)	
Ext. Cable Size/Type	Total
1/C 500kcmil	960
1/C #1/0 GND	400
1-3/c#2 w/1-#6gnd	270
1-3/c#6 w/1#10 gnd	630
1-3/c#12 w/gnd	1,615
1-2/c#12 w/gnd	1,640
1PR#16SH	11,230
50PR#16SH	100
Ethernet 8 Fiber Loose Tube 62.5/12.5 um Fiber Optic	1,400
Grand Total	18,245

All Raceway Types

Sum of Qty Rcwy (ft)	
RCWY	Total
1" IMC	120
3/4" IMC	2,455
3" RGS	200
3" IMC	40
Grand Total	2,810

From Equipment	To Equipment	Cable Estimates (Exterior GB)			Shared Rcwy/Tray	Raceway Estimates				Comments
		XGB Length (A) (ft)	Qty (A)	Cable size/type	Length (C) (ft)	Length (D) (ft)	Qty (D)	Size/Desc. (D)	Red	
ELNH-USS-001C,2A	CHW-CHU-001	55	6	1/C 500kcmil	0	35	2	3" RGS	N	
		70	2	1/C #1/0 GND	50	0	0		N	
ELNH-USS-001C,2B	CHW-CHU-002	50	6	1/C 500kcmil	0	30	2	3" RGS	N	
		60	2	1/C #1/0 GND	40	0	0		N	
ELNH-USS-001C,23	CHW-CHU-003	55	6	1/C 500kcmil	0	35	2	3" RGS	N	
		70	2	1/C #1/0 GND	50	0	0		N	
MCC-001C	CHW-P-001	100	1	1-3/c#2 w/1-#6gnd	50	30	1	3/4" IMC	N	
MCC-001C	CHW-P-003	70	1	1-3/c#2 w/1-#6gnd	40	10	1	3/4" IMC	N	
MCC-002C	CHW-P-002	100	1	1-3/c#2 w/1-#6gnd	50	30	1	3/4" IMC	N	
MCC-001C	CWS-P-001	95	1	1-3/c#6 w/1#10 gnd	55	20	1	1" IMC	N	
MCC-002C	CWS-P-002	105	1	1-3/c#6 w/1#10 gnd	65	20	1	1" IMC	N	
MCC-002C	CWS-P-003	115	1	1-3/c#6 w/1#10 gnd	75	20	1	1" IMC	N	
MCC-001C	CTW-CTW-001	95	1	1-3/c#6 w/1#10 gnd	55	20	1	1" IMC	N	
MCC-001C	CTW-CTW-002	105	1	1-3/c#6 w/1#10 gnd	65	20	1	1" IMC	N	

Attachment 7.2
Sht 3 of 6

From Equipment	To Equipment	Cable Estimates (Exterior GB)			Shared Rcwy/Tray	Raceway Estimates				
		XGB Length (A) (ft)	Qty (A)	Cable size/type	Length (C) (ft)	Length (D) (ft)	Qty (D)	Size/Desc. (D)	Red	Comments
MCC-002C	CTW-CTW-003	115	1	1-3/c#6 w/1#10 gnd	75	20	1	1" IMC	N	
MCC-001C	CTW-MIX001	95	1	1-3/c#12 w/gnd	35	40	1	3/4" IMC	N	
MCC-001C	HVAC-FAN-003	70	1	1-3/c#12 w/gnd	35	15	1	3/4" IMC	N	
MCC-002C	HVAC-FAN-012	100	1	1-3/c#12 w/gnd	40	40	1	3/4" IMC	N	
MCC-001C	CTW-HTR-001	90	1	1-3/c#12 w/gnd	55	15	1	3/4" IMC	N	
MCC-001C	CTW-HTR-002	100	1	1-3/c#12 w/gnd	65	15	1	3/4" IMC	N	
MCC-001C	CTW-HTR-003	110	1	1-3/c#12 w/gnd	75	15	1	3/4" IMC	N	
MCC-002C	CTW-HTR-0014	100	1	1-3/c#12 w/gnd	65	15	1	3/4" IMC	N	
MCC-002C	CTW-HTR-005	110	1	1-3/c#12 w/gnd	75	15	1	3/4" IMC	N	
MCC-002C	CTW-HTR-006	120	1	1-3/c#12 w/gnd	85	15	1	3/4" IMC	N	
MCC-001C	CTW-P-004	90	1	1-3/c#12 w/gnd	30	40	1	3/4" IMC	N	
MCC-002C	RFTS-CMP-XXX	90	1	1-3/c#12 w/gnd	40	30	1	3/4" IMC	N	
ELLV-PNL-001C	Safety Shower	100	1	1-2/c#12 w/gnd	0	80	1	3/4" IMC	N	
ELLV-PNL-001C	DCS-PNL-001	60	1	1-2/c#12 w/gnd	0	40	1	3/4" IMC	N	
ELLV-PNL-002C	DCS-PNL-002	80	1	1-2/c#12 w/gnd	0	60	1	3/4" IMC	N	

From Equipment	To Equipment	Cable Estimates (Exterior GB)			Shared Rcwy/Tray	Raceway Estimates				Comments
		XGB Length (A) (ft)	Qty (A)	Cable size/type	Length (C) (ft)	Length (D) (ft)	Qty (D)	Size/Desc. (D)	Red	
ELLV-PNL-001C	MISC. 120V CKTS.	70	10	1-2/c#12 w/gnd	0	50	10	3/4" IMC	N	
ELLV-PNL-002C	MISC. 120V CKTS.	70	10	1-2/c#12 w/gnd	0	50	10	3/4" IMC	N	
ELLV-PNL-002C	PLTA-CMP-XXX	70	1	1-3/c#12 w/gnd	0	50	1	3/4" IMC	N	
ELNH-MCC-24M	CHW-P-004	110	1	1-3/c#12 w/gnd	40	50	1	3/4" IMC	N	
ELNH-MCC-31M	CHW-P-005	110	1	1-3/c#12 w/gnd	40	50	1	3/4" IMC	N	
Cooling Tower Instrumentation	CTW-INST-100	210	14	1PR#16SH	40	150	1	3/4" IMC	N	J-J8-K-00031
Cooling Tower Instrumentation	CTW-CAB-510	160	14	1PR#16SH	60	80	1	3/4" IMC	N	J-J8-K-00031
Cooling Tower Pumps	CTW-INST-100	160	5	1PR#16SH	40	100	1	3/4" IMC	N	J-J8-K-00031
Cooling Tower Pumps	CTW-CAB-510	100	5	1PR#16SH	60	20	1	3/4" IMC	N	J-J8-K-00031
Chiller, General and Condenser	CTW-INST-100	110	20	1PR#16SH	0	90	1	3/4" IMC	N	J-J8-K-00031
Chiller, General and Condenser	CTW-CAB-510	80	20	1PR#16SH	0	60	1	3/4" IMC	N	J-J8-K-00031
Chilled Water Pumps	CTW-INST-100	120	5	1PR#16SH	0	100	1	3/4" IMC	N	J-J8-K-00031

From Equipment	To Equipment	Cable Estimates (Exterior GB)			Shared Rcwy/Tray	Raceway Estimates				
		XGB Length (A) (ft)	Qty (A)	Cable size/type	Length (C) (ft)	Length (D) (ft)	Qty (D)	Size/Desc. (D)	Red	Comments
Chilled Water Pumps	CTW-CAB-510	70	5	1PR#16SH	0	50	1	3/4" IMC	N	J-J8-K-00031
CTW-INST-100	CTW-CAB-510	100	1	50PR#16SH	40	40	1	3" IMC	N	J-J8-K-00031, 44 count actual
CTW-CAB-510	ICS-CAB-060	1400	1	Ethernet 8 Fiber Loose Tube 62.5/12.5 um Fiber Optic	1320	60	1	3/4" IMC	N	J-J8-K-00031, Based on using existing culvert - possibly shared - see ICS Bulk Takeoff for Network wiring to ICS-CAB-060
ELLV-PNL-001C	CHW-INST-100	110	1	1-3/c#12 w/gnd	40	50	1	3/4" IMC	N	J-J8-K-00031, 2 separate 120 VAC circuits - Cab in Southeast corner of Chiller building.
ELLV-PNL-001C	CTW-CAB-510	70	1	1-3/c#12 w/gnd	0	50	1	3/4" IMC	N	J-J8-K-00031, 2 separate 120 VAC circuits - Cab in Southwest corner of Chiller

From Equipment	To Equipment	Cable Estimates (Exterior GB)			Shared Rcwy/Tray	Raceway Estimates				
		XGB Length (A) (ft)	Qty (A)	Cable size/type	Length (C) (ft)	Length (D) (ft)	Qty (D)	Size/Desc. (D)	Red	Comments
										building.
ELLV-PNL-001C	CTW-CNSL-500	70	1	1-3/c#12 w/gnd	0	50	1	3/4" IMC	N	J-J8-K-00031, 2 separate 120 VAC circuits - Cab in Southwest corner of Chiller building.

ATTACHMENT 7.3

C/S/A Bulk Material List

Item No.	Description of Item	Size	Quantity	Remarks
1	Base Plates	12"x12"x ¾" Tk.	75 ea	
2	A-36 Maxi Bolts	¾" Dia.	300 ea	
3	A-36 Maxi Bolts	½ " Dia.	57 ea	
4	A-36 Maxi Bolts	5/8 " Dia.	18 ea	
5	A-36 Maxi Bolts	1" Dia.	32 ea	
6	Sch. 80 Pipe	2" Dia.	15 Ft.	
7	Steel Beam	W6x25	72 Ft.	
8	Tube Steel	TS 4x4x 0.5	137 Ft	
9	Tube Steel	TS 3x3x0.375	144 Ft	
10	Pipe Clamps	12" Dia.	21 ea	Hanger
11	Pipe Clamps	12" Dia.	2 ea	Axial
12	Pipe Clamps	8" Dia.	3 ea	
13	Pipe Clamps	4" Dia.	6 ea	
14	Threaded Rods	1" Dia.	288 Ft.	
15	Upper Attachment	For 1" Dia. Rod	30 ea	
16	Steel Lugs	4"x2"x1" Tk.	8 ea.	Axial

EXCAVATION		
Item No	**Description**	**Quantity**
1	Sanitary Sewer Line	90 cubic yards
2	Domestic Water Line	45 cubic yards
3	Chilled Water Lines	375 cubic yards

ATTACHMENT 7.4

Equipment No. (System - EqType - Eqpmt #) WBS	Equipment Description	Manufacturer	Model No.	Ref.Document	Discipline	Procurement Level	Area	Facility Code	Bldg	Eq. Status	Functional Classification	Est. Cost	Cost Basis
CHW - VSL - 001 01.30.02.34.01.01.01.08.04.02	Expansion Tank	Creator ERICTA		M-M5-K-01959 M-M6-K-02312 M-DS-K-00143	M		K	KL	LATER	DESIGN	PS		
CHW - VSL - 002 01.30.02.34.01.01.01.08.04.02	Air Separator	Creator ERICTA		M-M5-K-01959 M-M6-K-02312 M-DS-K-00144	M		K	KL	LATER	DESIGN	PS		
CHW - VSL - 003 01.30.02.34.01.01.01.08.04.02	Chemical Feed Tank	Creator ERICTA		M-M5-K-01959 M-M6-K-02312 M-DS-K-00145	M		K	KL	LATER	DESIGN	PS		
CHW - CHU - 001 01.30.02.34.01.01.01.08.04.02	Chiller	Creator ERICTA		M-M5-K-01959 M-M6-K-02313 M-DS-K-00137	M		K	KL	LATER	DESIGN	PS		
CHW - CHU - 002 01.30.02.34.01.01.01.08.04.02	Chiller	Creator ERICTA		M-M5-K-01959 M-M6-K-02313 M-DS-K-00137	M		K	KL	LATER	DESIGN	PS		
CHW - CHU - 003 01.30.02.34.01.01.01.08.04.02	Chiller	Creator ERICTA		M-M5-K-01959 M-M6-K-02313 M-DS-K-00137	M		K	KL	LATER	DESIGN	PS		
CHW - P - 001 01.30.02.34.01.01.01.08.04.02	Chilled WaterPump	Creator ERICTA		M-M5-K-01959 M-M6-K-02312 M-DS-K-00138	M		K	KL	LATER	DESIGN	PS		
CHW - P - 002 01.30.02.34.01.01.01.08.04.02	Chilled Water Pump	Creator ERICTA		M-M5-K-01959 M-M6-K-02312 M-DS-K-00138	M		K	KL	LATER	DESIGN	PS		
CHW - P - 003 01.30.02.34.01.01.01.08.04.02	Chilled Water Pump	Creator ERICTA		M-M5-K-01959 M-M6-K-02312 M-DS-K-00138	M		K	KL	LATER	DESIGN	PS		

ATTACHMENT 7.4

Equipment No. (System - EqType - Eqpmt #) WBS	Equipment Description	Manufacturer	Model No.	Ref.Document	Discipline	Procurement Level	Area	Facility Code	Bldg	Eq. Status	Functional Classification	Est. Cost	Cost Basis
CHW - P - 004 01.30.02.34.01.01.01.08.04.02	Cooling Water Pump	Creator Cameron		M-M5-K-01962 M-M6-K-02291 M-DS-K-00151	M		K	KL	105000	DESIGN	PS		
CHW - HTEX - 001 01.30.02.34.01.01.01.08.04.02	Cooling Water Heat Exchanger	Creator Cameron		M-M5-K-01962 M-M6-K-02291 M-DS-K-00150	M		K	KL	105000	DESIGN	PS		
CHW - P - 005 01.30.02.34.01.01.01.08.04.02	Cooling Water Pump (Stand-by)	Creator Cameron		M-M5-K-01962 M-M6-K-02291 M-DS-K-00151	M		K	KL	105000	DESIGN	PS		
CHW - CNSL - 500 01.30.02.34.01.01.01.08.04.02	Control Console, Chilled Water	Creator Manucy		J-J8-K-00031	I&C		K	KL	LATER	DESIGN	PS		
CHW - INST - 100 01.30.02.34.01.01.01.08.04.02	Instrument Rack, Chilled Water	Creator Manucy		J-J8-K-00031	I&C		K	KL	LATER	DESIGN	PS		
CHW - CAB - 500 01.30.02.34.01.01.01.08.04.02	PLC I/O Cabinet, Chilled Water	Creator Manucy		J-J8-K-00031	I&C		K	KL	LATER	DESIGN	PS		
CHW - CAB - 510 01.30.02.34.01.01.01.08.04.02	PLC Processor, Chilled Water	Creator Manucy		J-J8-K-00031	I&C		K	KL	LATER	DESIGN	PS		

ATTACHMENT 7.4

Equipment No. (System - EqType - Eqpmt #) WBS	Equipment Description	Manufacturer	Model No.	Ref.Document	Discipline	Procurement Level	Area	Facility Code	Bldg	Eq. Status	Functional Classification	Est. Cost	Cost Basis
CTW - CTW - 001 01.30.02.34.01.01.01.08.04.03	Cooling Tower, one cell	Creator ERICTA		M-M5-K-01959 M-M6-K-02314 M-DS-K-00139	M		K	KL	LATER	DESIGN	PS		
CTW - CTW - 002 01.30.02.34.01.01.01.08.04.03	Cooling Tower, one cell	Creator ERICTA		M-M5-K-01959 M-M6-K-02314 M-DS-K-00139	M		K	KL	LATER	DESIGN	PS		
CTW - CTW - 003 01.30.02.34.01.01.01.08.04.03	Cooling Tower, one cell (Stand-by)	Creator ERICTA		M-M5-K-01959 M-M6-K-02314 M-DS-K-00139	M		K	KL	LATER	DESIGN	PS		
CTW - P - 001 01.30.02.34.01.01.01.08.04.03	Cooling Tower Water Pump	Creator ERICTA		M-M5-K-01959 M-M6-K-02314 M-DS-K-00140	M		K	KL	LATER	DESIGN	PS		
CTW - P - 002 01.30.02.34.01.01.01.08.04.03	Cooling Tower Water Pump	Creator ERICTA		M-M5-K-01959 M-M6-K-02314 M-DS-K-00140	M		K	KL	LATER	DESIGN	PS		
CTW - P - 003 01.30.02.34.01.01.01.08.04.03	Cooling Tower Water Pump (Stand-by)	Creator ERICTA		M-M5-K-01959 M-M6-K-02314 M-DS-K-00140	M		K	KL	LATER	DESIGN	PS		
CTW - P - 004 01.30.02.34.01.01.01.08.04.03	Ozone Treatment Pump	Creator ERICTA		M-M5-K-01959 M-M6-K-02314 M-DS-K-00141	M		K	KL	LATER	DESIGN	PS		
CTW - MIX - 001 01.30.02.34.01.01.01.08.04.03	Ozone Treatment Stystem	Creator ERICTA		M-M5-K-01959 M-M6-K-02314 M-DS-K-00141	M		K	KL	LATER	DESIGN	PS		
CTW - INST - 100 01.30.02.34.01.01.01.08.04.03	Instrument Rack, Cooling Tower	Creator Manucy		J-J8-K-00031	I&C		K	KL	LATER	DESIGN	PS		

ATTACHMENT 7.4

Equipment No. (System - EqType - Eqpmt #) WBS	Equipment Description	Manufacturer	Model No.	Ref.Document	Discipline	Procurement Level	Area	Facility Code	Bldg	Eq. Status	Functional Classification	Est. Cost	Cost Basis
CTW - CAB - 600 01.30.02.34.01.01.01.08.04.03	PLC I/O Cabinet, Cooling Tower	Creator Manucy		J-J8-K-00031	I&C		K	KL	LATER	DESIGN	PS		
CTW - CC - 001 01.30.02.34.01.01.01.08.04.03	Conductivity Controller	Creator T. Edwards		M-M5-K-01959 M-M6-K-02314 M-DS-K-00141	M		K	KL	LATER	DESIGN	PS		

For Health Hazard Applications

Job Name _____ Contractor _____

Job Location _____ Approval _____

Engineer _____ Contractor's P.O. No. _____

Approval _____ Representative _____

Series 909

Reduced Pressure Zone Assemblies

909 Sizes: ¾", 1" (20, 25mm)
909M1 Sizes: 1¼", 1½", 2" (32, 40, 50mm)

Series 909 Reduced Pressure Zone Assemblies are designed to provide superior cross-connection control protection of the potable water supply in accordance with national plumbing codes and containment control for water authority requirements. This series can be utilized in a variety of installations, including health hazard cross-connections in plumbing systems or for containment at the service line entrance. With its exclusive, design incorporating the patented "air-in/water-out" principle it provides maximum relief valve discharge during the emergency conditions of combined backsiphonage and backpressure with both checks fouled. Model 909QT, standardly furnished with full port, resilient seated and bronze ball valve shutoffs. Sizes ¾" and 1" (20 and 25mm) shutoffs have tee handles.

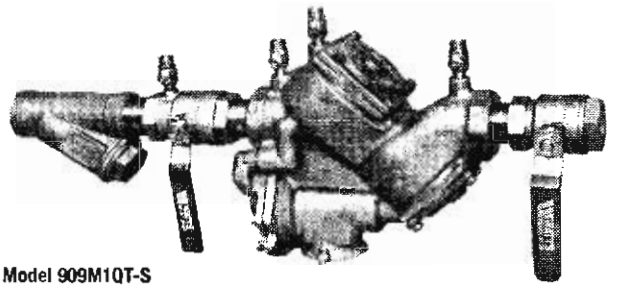

Model 909M1QT-S
1½" (40mm)

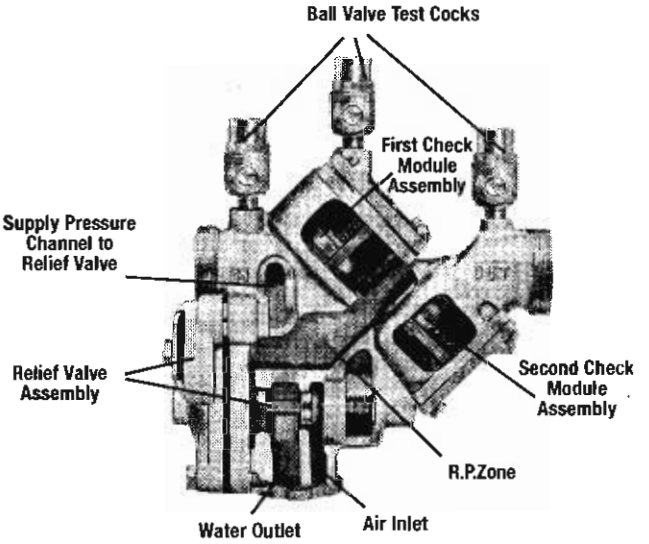

Features

- Modular design
- Replaceable seats
- Compact for installation ease
- Horizontal or vertical (up or down) installation
- No special tools required for servicing

Specifications

A Reduced Pressure Zone Assembly shall be installed at each cross-connection to prevent backsiphonage and backpressure of hazardous materials into the potable water supply. The assembly shall consist of a pressure differential relief valve located in a zone between two positive seating check valves. Backsiphonage protection shall include provision to admit air directly into the reduced pressure zone via a separate channel from the water discharge channel, or directly into the supply pipe via a separate vent. The assembly shall include two tightly closing shutoff valves before and after the assembly, test cocks and a protective strainer upstream of the No. 1 shutoff valve. The assembly (specify Model 909 for temperatures up to 140°F (60°C) or Model 909HW for temperatures up to 210°F (99°C)) shall meet the requirements of ASSE Std. 1013; AWWA Std. C-511-92 CSA B64.4; FCCCHR of USC Manual Section 10. Listed by IAPMO (UPC). SBCCI (Standard Plumbing code). The assembly shall be a Watts Regulator Company Series 909QTS or 909QTSHW.

Now Available
WattsBox Insulated Enclosures.
For more information, send for literature ES-WB.

WATTS®

Watts product specifications in U.S. customary units and metric are approximate and are provided for reference only. For precise measurements, please contact Watts Technical Service. Watts reserves the right to change or modify product design, construction, specifications, or materials without prior notice and without incurring any obligation to make such changes and modifications on Watts products previously or subsequently sold.

M-SOW-K-00022, Rev. 0
pg 35 of 38
Attachment 7.5 sht 2 of 2

Models

Suffix

AQT	Elbow fittings for 360° rotation ¾" – 2" only
C&T	Cap and tether test cocks
PC	Internal polymer coating
QT	Quarter-turn ball valves
S	Bronze strainer
HW	Stainless steel check modules for hot and harsh water conditions
LF	Without shutoff valves
LH	Locking ball valve handles (open position)
HC	Inlet/outlet fire hydrant fitting (2" only)

Prefix

C	Clean and check strainer - ¾" and 1" (20 and 25mm) only
U	Union - ¾" and 1" (20 and 25mm) only
FAE	Flanged adapter ends - 1¼", 1½", 2" (32, 40, 50mm) only

NOTE: The installation of a drain line is recommended. When installing a drain line, an air gap is necessary.

Approvals

Listed by IAPMO

Listed by SBCCI

1013 B64.4

*Approved by the Foundation for Cross-Connection Control and Hydraulic Research at the University of Southern California.

Horizontal and vertical "flow-up" approval on ¾" and 1" sizes (models 909QT, 909PCQT, and U909QT).

Pressure — Temperature

Temperature Range: 33°F – 140°F (5°C – 60°C) continuos, 180°F (82°C) intermittent

Maximum Working Pressure: 175psi (12.06 bar)

Series 909HW:

Temperature Range: 33°F – 210°F (5°C – 99°C)

Maximum Working Pressure: 175psi (12.06 bar)

Materials

Body:	Bronze
Check Seats:	909 Celcon®
Relief Valve Seats:	Stainless steel 909HW
Test Cocks:	Bronze

Celcon® is a registered trademark of Celanese, Limited

Connections

¾", 1" (19, 25mm) 909-NPT Female threaded body connection.

1¼" – 2" (32 – 50mm) 909-M1-NPT Male threaded body connection.

Standards

AWWA C-511-92

FCCCHR of USC Manual Section 10

IAPMO (UPC), SBCCI (Standard Plumbing code)

How it Operates

The unique relief valve construction incorporates two channels: one for air, one for water. When the relief valve opens, as in the accompanying air-in/water-out diagram, the right-hand channel admits air to the top of the reduced pressure zone, relieving the zone vacuum. The channel on the left then drains the zone to atmosphere. Therefore, if both check valves foul, and simultaneous negative supply and positive backpressure develop, the relief valve uses the air-in/water-out principle to stop potential backflow.

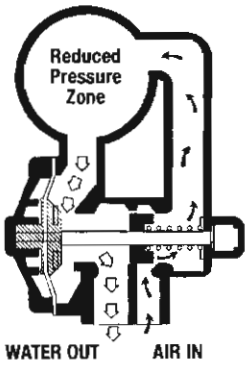

Patent# 4,241,752

Dimensions — Weights

When installing a drain line use 909AG series Air Gaps on Series 909 backflow preventers. *909EL series elbows are for air gaps on backflow preventers in vertical installations.

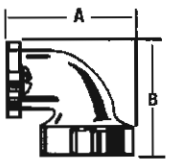

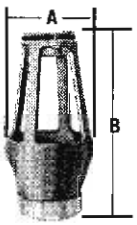

Series 909AG Air Gaps

		909 DRAIN		OUTLET		DIMENSIONS				WEIGHTS	
Iron Body		Sizes		Sizes		A		B			
No.	*Desc.*	*in.*	*mm*	*in.*	*mm*	*in.*	*mm*	*in.*	*mm*	*lbs.*	*kg.*
909-AG-C	Air Gap	¾,1	19.25	1	25	3¼	83	4⅞	124	1½	.7
909-EL-C	Elbow*	¾,1	19.25	–	–	2⅜	60	2⅜	60	⅜	.2
909-AG-F	Air Gap	1¼-2	32-50	2	50	4⅜	111	6¾	171	3¼	1.5
909-EL-F	Elbow*	1¼-2	32-50	–	–	3⅝	92	3⅝	92	2	.9

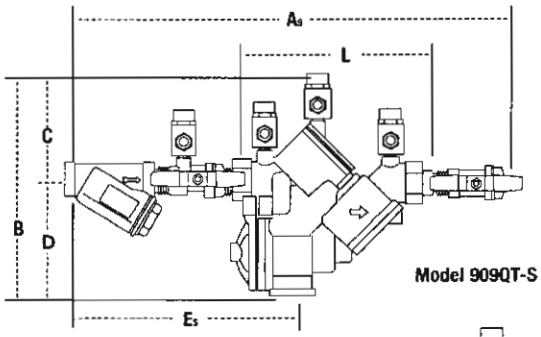

Model 909QT-S

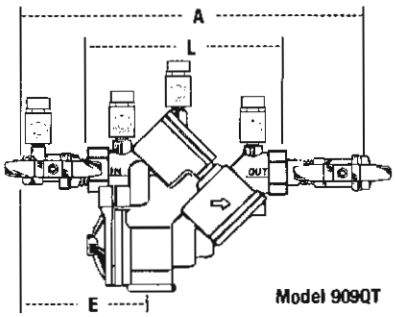

Model 909QT

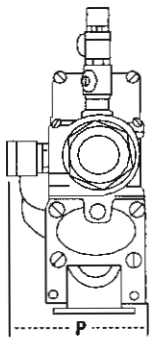

Eye wash example

SPEAKMAN

SE-6000 SERIES ROUGH-IN AND REPLACEMENT PART COMPONENTS

M-SOW-K-00022, Rev. 0
Pg. 36 of 38
Attachment 7.6
Sht 1 of 1

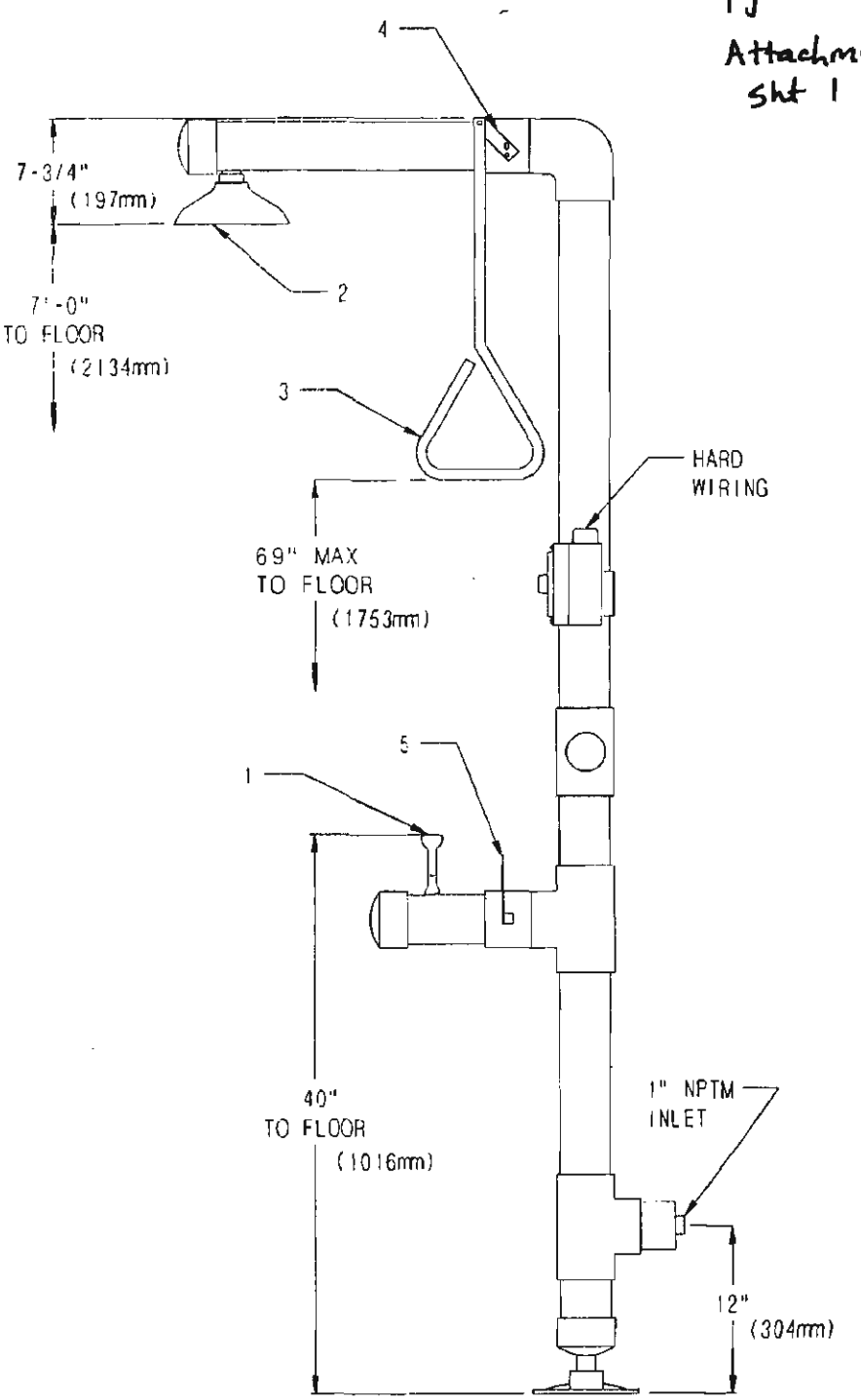

~~M-DEP-K-98007 REV PG 30 of 4~~
ADE 3/22/07
M-SOW-K-00022, Rev. 0
pg 37 of 38
Attachment 7.7 Sht 1 of 2

- Heavy-gauge walls
- One-piece wall design prevents water leakage
- Molded-in soap dish and shampoo holders
- Two handrails for safety
- Textured, non-slip floor
- Rust-resistant; An inexpensive alternative for camps, cabins, lodges, and all-weather locations
- Easy-to-clean walls
- Assembles in minutes
- Includes all installation hardware

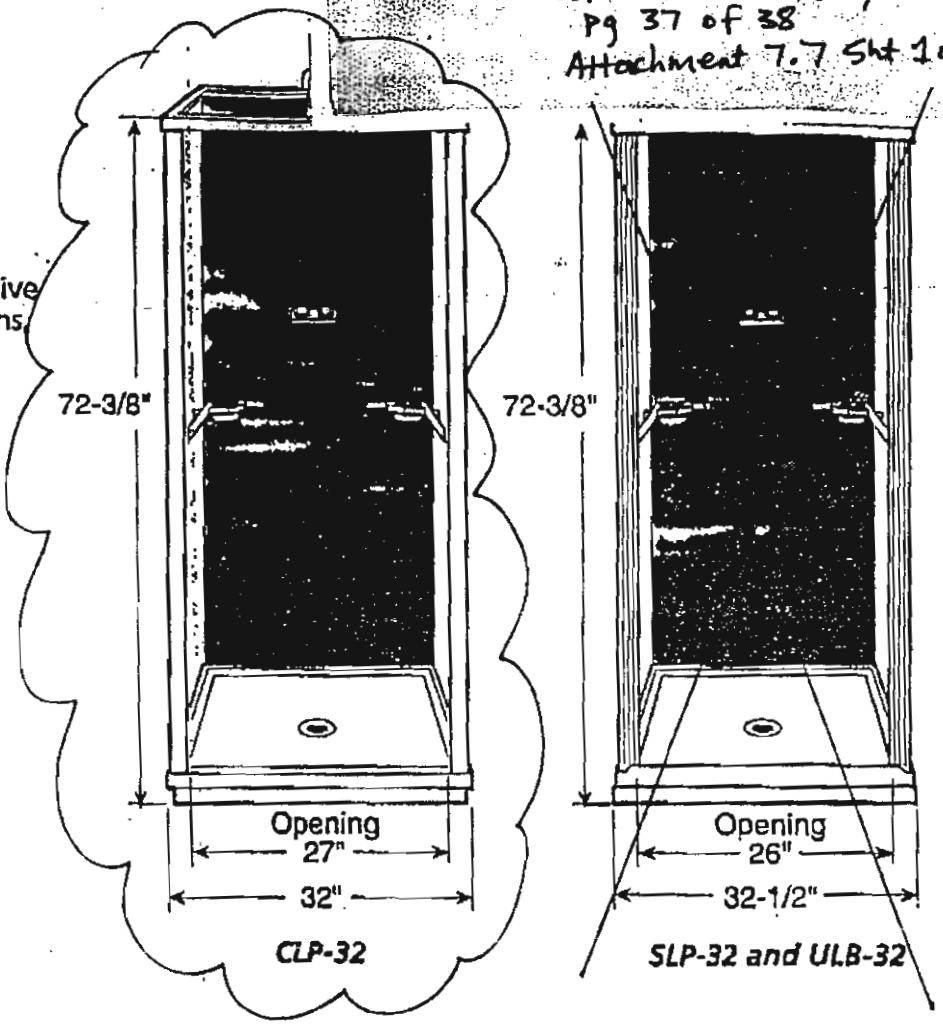

ASB offers three types of shower stalls:

[illegible]	[illegible]	[illegible]	[illegible]
No-caulk drain	✔	✔	✔
Shower head	✔	✔	✔
Shower curtain	✔	✔	✔
32" x 32" base	Injection Molded	Structural Foam	Structural Foam
Faucets	Plastic	Plastic	Deluxe Brass
Front rail	Plastic	Aluminum	Aluminum

American Shower & Bath Corporation
540 Glen Avenue • Moorestown, NJ 08057 • Phone: 800-355-2721 • Fax: 609-235-9262

Made in the USA

American Shower & Bath
151 HELLER PLACE, BELLMAWR, NJ 08031
TELEPHONE: (609) 931-0200 • FAX (609) 931-0201

~~M-DCP-K-98007~~
~~Rev 0~~ ADE 3/22/07
~~Pg 9 of 11~~

CLP 32" SHOWER STALL PARTS AND INSTALLATION

1. DETERMINE LOCATION OF SHOWER BASE DRAIN PIPE USING DIMENSIONS SHOWN BELOW.
2. DRAIN SYSTEMS IS DESIGNED FOR 2" I.P.S. PIPE. IF 1-1/2" PIPE IS BEING USED IT WILL BE NECESSARY TO PURCHASE REDUCING FITTINGS.
3. AROUND DRAIN PIPE PROVIDE A MINIMUM OF 4-1/2" DEEP CLEARANCE TO CLEAR DRAIN HOUSING ON BASE.
4. MAKE SURE THAT FLOOR UNDER BASE IS LEVEL. VISIBL DRAIN PIPE SHOULD BE STRAIGHT UP AND SOLIDLY HEL TO THE FLOOR.
5. TO INSTALL DRAIN ASSEMBLY REFER TO PAGE ENTITLED 'DRAIN ASSEMBLY INSTRUCTIONS.'

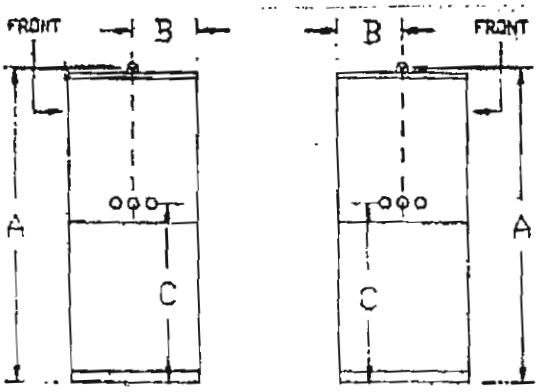

M-SOW-K-00022, Rev.0
pg 38 of 38
Attachment 7.7
sht 2 of 2

DIMENSIONS

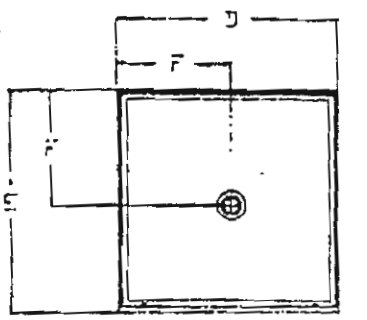

MODEL	A	B	C	D	E	F	
KD-CLP-32W	73-7/16	16	41	32-1/4	32-1/4	16-1/8	INCHES
	186.5	40.6	104.1	81.9	81.9	40.9	CENTIMETERS

FIG. 1
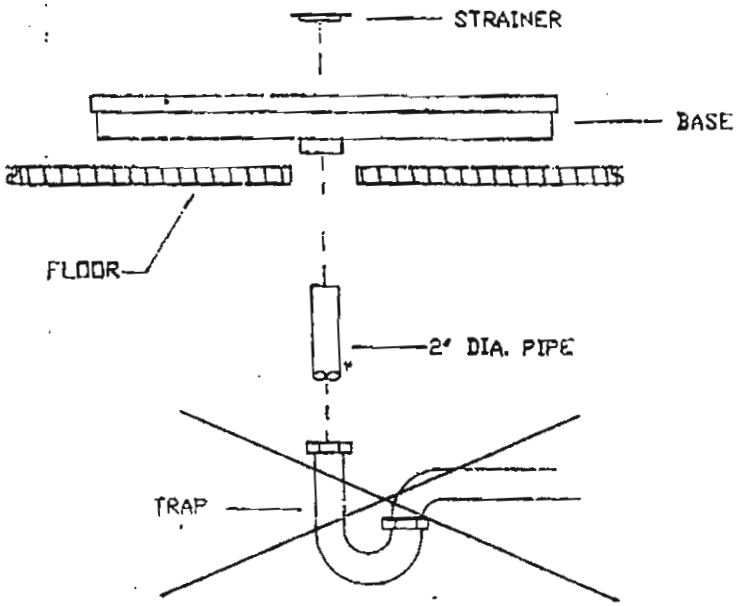
FIGURE 1, SHOWS A TYPICAL BASE INSTALLATION, FOR DETAILED INSTALLATION OF THE DRAIN ASSEMBLY REFER TO PAGE ENTITLED 'DRAIN ASSEMBLY INSTRUCTIONS.'