UCRL-ID-122659
L-20216-1

Fissile Materials Disposition Program

Alternative Technical Summary Report: Vitrification Can-in-Canister Variant

Leonard W. Gray

August 26, 1996

LAWRENCE LIVERMORE NATIONAL LABORATORY
University of California • Livermore, California • 94550

UCRL-ID-122659
L-20216-1

DISCLAIMER

This document was prepared as an account of work sponsored by an agency of the United States Government. Neither the United States Government nor the University of California nor any of their employees, makes any warranty, express or implied, or assumes any legal liability or responsibility for the accuracy, completeness, or usefulness of any information, apparatus, product, or process disclosed, or represents that its use would not infringe privately owned rights. Reference herein to any specific commercial product, process, or service by trade name, trademark, manufacturer, or otherwise, does not necessarily constitute or imply its endorsement, recommendation, or favoring by the United States Government or the University of California. The views and opinions of authors expressed herein do not necessarily state or reflect those of the United States Government or the University of California, and shall not be used for advertising or product endorsement purposes.

This report has been reproduced
directly from the best available copy.

Available to DOE and DOE contractors from the
Office of Scientific and Technical Information
P.O. Box 62, Oak Ridge, TN 37831
Prices available from (615) 576-8401, FTS 626-8401

Available to the public from the
National Technical Information Service
U.S. Department of Commerce
5285 Port Royal Rd.,
Springfield, VA 22161

Work performed under the auspices of the U.S. Department of Energy by Lawrence Livermore National Laboratory under Contract W-7405-ENG-48.

Contents

Acknowledgments v
Executive Summary ix
1.0 Variant Description 1-1
1.1 Introduction 1-1
1.1.1 Assumptions and Design Basis 1-3
1.1.2 Candidate Feed Materials 1-4
1.1.3 Physical Layout Locations 1-4
1.2 First-Level Flow Diagram 1-4
1.2.1 Front-End Plutonium Processing—Disassembly and Conversion (D&C) 1-6
1.2.2 Front-End Plutonium Processing—First-Stage Vitrification 1-7
1.2.3 Back-End Processing—Second-Stage Vitrification 1-7
1.3 Second-Level Flow Diagrams 1-8
1.3.1 Front-End Plutonium Processing—Disassembly and Conversion (D&C) 1-8
1.3.2 Front-End Plutonium Processing—First Stage Vitrification 1-11
1.3.3 Back-End Processing—Second Stage HLW Vitrification 1-13
1.3.4 Onsite Canister Storage 1-15
1.4 Facilities 1-16
1.5 Cross-Cutting Technologies 1-21
1.5.1 Transportation 1-21
1.5.2 Domestic Safeguards 1-26
1.5.3 International Safeguards and Nonproliferation 1-27
1.5.4 Process Description for Disposal of Plutonium Wastes in a HLW Repository 1-27
1.6 Wet-Feed 1-30
1.6.1 Wet Pretreatment Feed Preparation Option 1-30
1.6.3 Wet Pretreatment Off-Gas 1-33
2.0 Criteria Assessment 2-1
2.1 Introduction 2-1
2.2 Resistance to Theft and Diversion 2-1
2.2.1 Applicable Safeguards and Security Requirements and Measures 2-1
2.2.2 Identification of Diversion, Theft, or Proliferation Risks 2-3
2.2.3 Ability to Achieve the Spent Fuel Standard 2-10
2.2.4 Safeguards and Security Transportation Related Issues 2-11
2.3 Resistance to Diversion, Retrieval, Extraction, and Reuse by Host Nation 2-11
2.3.1 Applicable Safeguards and Security Requirements and Measures 2-11
2.3.2 Possible Diversion, Reuse and Retrieval Risks 2-12

2.4 Technical Viability 2-14
2.4.1 Technical Viability of Front-End Plutonium Processing—Disassembly and Conversion 2-14
2.4.2 Technical Viability of Front-End and Back-End Vitrification 2-16
2.4.3 Technical Viability—Repository (Vitrification Can-in-Canister) 2-17
2.5 ES&H Summary (Deltas/Improvements Over PEIS) 2-18
2.5.1 Front-End Plutonium Processing—Disassembly and Conversion 2-19
2.5.2 Front-End and Back-End Vitrification 2-19
2.6 Costing Data—Vitrification Can-in-Canister variant 2-20
2.6.1 Front-End Operating Assumptions 2-21
2.6.2 Back-End Vitrification Cost Basis 2-23
2.6.3 Repository Costs 2-23
2.7 Schedule 2-25
2.7.1 Overall Schedule 2-25
2.7.2 Uncertainties 2-33
2.8 Institutional Issues 2-35
2.8.1 International Issues 2-35
2.8.2 Choice of Disposition Alternative 2-36
2.8.3 Sociopolitical Issues 2-37
2.8.4 Environment, Safety, and Health Issues 2-37
2.9 Hybrid Vitrification Options 2-38
2.9.1 MOX Vitrification Hybrid 2-38
2.9.1.1 Logic and Benefits of MOX- Vitrification Hybrid 2-39
2.9.1.2 Plutonium Feed Materials 2-40
2.9.1.3 Implementation 2-40
2.9.2 Low Assay Plutonium Immobilization 2-41
2.9.2.1 Logic of Low Assay Plutonium Vitrification Hybrid 2-41
2.9.2.2 Low Assay Plutonium Feed Materials 2-42
2.9.3 Non-Plutonium Feed Materials Hybrid 2-43
3.0 Acronyms 3-1

Figures

1. First-level flow diagram, vitrification can-in-canister variant 1-6
2. Second-level flow diagram, vitrification can-in-canister front-end disassembly and conversion 1-8
3. Second-level flow diagram, vitrification can-in-canister facility, front-end and back-end vitrification 1-9
4. Conceptual cut-away of can-in-canister (not to scale) 1-14
5. F-Area layout 1-17
6. S-Area layout showing plutonium canister storage area at DWPF 1-19
7. Plutonium canister interim storage vault and transfer corridor to DWPF 1-20
8. DWPF canister fill 1-21
9. Simplified flow chart showing transportation segments 1-22
10. DWPF canister 1-25
11. SRS HLW rail cask 1-25
12. Conceptual plan for repository surface facilities handling plutonium waste forms 1-28
13. Conceptual layout for isolation of plutonium waste forms 1-29
14. Conceptual process flow diagram for handling plutonium waste forms 1-31
15. Dissolution flow chart 1-32
16. Front-end schedule 2-30
17. Back-end schedule 2-31
18. Hybrid option, vitrification can-in-canister with MOX fuel fabrication for reactor burn 2-40

Tables

1. Physical locations for proposed vitrification can-in-canister process equipment 1-5
2. Parameters for Intersite Transportation Segment 1 1-24
3. Parameters for intersite transportation segment #2 1-25
4. (DOE) Nuclear material attractiveness and safeguards categories for plutonium 2-3
5. Safeguards and security environment 2-4
6. Safeguards and security material form 2-4
7. Safeguards and security assurance 2-5
8. Relative potential risks for threats and criteria 1 & 2 2-8
9. Summary constant dollar life-cycle costs for vitrification can-in-canister variant ($M 1996) 2-20
10. Front-end and back-end operating assumptions and design basis 2-21

11. Front-end facility plutonium processing and vitrification LCC summary for vitrification can-in-canister variant ($M 1996) 2-22
12. Back-end vitrification LCC summary—vitrification can-in-canister at SRS ($M 1996) 2-24
13. Front-end facility schedule breakout 2-26
14. Back-end facility schedule breakout 2-28

Acknowledgments

Organizations that provided major contributions to the development of this report include:

- Lawrence Livermore National Laboratory
- Westinghouse Savannah River Corporation
- Lockheed-Martin Energy Systems
- Bechtel
- Raytheon
- Science Applications International Corporation

This document was co-authored or reviewed by

Name	Affiliation	Areas of Responsibility
James Angelos	WSRC Program Manager	Immobilization Task
Guy Armantrout	LLNL Project Leader	Pilot Plant and Prototype Manufacturing
Thomas Batchelor	Raytheon Nuclear Engineer	Process
Dale Bignell	WSRC Mechanical Engineer	Technical Reviewer
Mark Bronson	LLNL Project Leader	Plutonium Experiments and ARIES
Spence Childers	Raytheon Manager	Subcontractor Task Manager
Patrick Coyle	LLNL Project Engineer	Integration
Al DiSabatino	SAIC Project Manager	Integration
J. M. East	WSRC Nuclear Engineer	Safety Analysis and Radiological Impact Assessment
Karla Elam	ORNL Nuclear Engineer	Immobilization Task
Ken Ferguson	WSRC Nuclear Engineer	Technical Reviewer
Charles Forsberg	ORNL Program Manager	Immobilization Task
Darrla Giersch	Sandia	Transportation
Paul Grande	Raytheon Engineer	Process
Leonard W. Gray*	LLNL Associate Program Leader	Immobilization Task Leader
Diane Harrison	DOE/RW (OCRWN) Task Leader	Repository Analysis Task
Bill Holtzscheiter	WSRC Chemical Engineer	Technical Reviewer

Name	Affiliation	Areas of Responsibility
Marc Jeric	Bechtel Mechanical Engineer	Technical Reviewer
Tehmau Kan	LLNL Deputy Associate Program Leader	Immobilization Task Deputy
Nick Kuehn	WSRC Nuclear Engineer	Technical Reviewer, Glass Process Technology
Paul Maddux	WSRC Mechanical Engineer	Team Leader for Development of Pretreatment Processes
Mal McKibben	WSRC Chemist	Process, Technical Reviewer
D. L. McWhorter	WSRC Chemical Engineer	Nuclear Safety, Process
Lonnie Moore	LLNL Project Manager	Safeguards, Security, and Non-Proliferation
James Mott	Raytheon Nuclear Engineer	Process
Stephen Newman	Raytheon Nuclear Engineer	Process
Joe Ortaldo	WSRC Chemical Engineer	Technical Reviewer, DWPF Process
David Peeler	WSRC Ceramic Engineer	Technical Reviewer
William Perry	WSRC Chemical Engineer	Technical Reviewer
Albert Poon	WSRC Mechanical Engineer	Waste, Environmental, Project Scheduling
Glenn Putt	Raytheon Engineer	Process, Subcontractor Task Coordinator
Michael Ramay	Raytheon Engineer	Process
Gene Ramsey	WSRC Ceramic Engineering	Technical Reviewer
Roy Rathbun	WSRC Nuclear Engineer	Criticality Safety
Javier Reyer-Jiminez	Raytheon Nuclear Engineer	Process
Tracy Rudisill	WSRC Chemical Engineering	Technical Reviewer
Saleem Salaymeh	WSRC Nuclear Radiochemist	Nuclear Safety & Accident Analy Technical Reviewer
Sarvajit Sareen	TRW Project Engineer	Repository Analysis Task
John Sessions	WSRC Mechanical Engineer	Nepa Compliance, Environment Technical Reviewer
Eric Shogren	WSRC Nuclear Engineer	Nuclear Safety & Accident Anal Radiological Impacts, Technical Reviewer
Jim Steed	WSRC Electrical Engineer	Pretreatment Process
Kent Sullivan	WSRC Program Task Leader	Immobilization Task Coordinat

Name	Affiliation	Areas of Responsibility
Wallace Sumner	WSRC Chemical Engineer	Pretreatment, Process, Technical Reviewer
Con Turner	LLNL Security Specialist	Safeguards and Security
Hire Vachini	Raytheon Mechanical Engineer	Process
George Wicks	WSRC Physics and Glass Chemistry	Technical Reviewer

* **Author to whom all** questions should be directed.

ons-usable

ium are
position of
(PBIS).

perations
otic,

The shipping containers will be unpacked, and accountability measurements will be conducted. The plutonium materials will then be converted to oxide, blended, and fed to the first-stage vitrification process using a dry-feed preparation process, where the plutonium oxide will be dissolved into borosilicate glass with a plutonium concentration of approximately 10 wt% or less. Once the material has been dissolved in the glass, recovery of the plutonium will require extensive processing to return it to a state readily transformed to weapons. The plutonium receipt, pretreatment and vitrification will take place in existing "cold" areas of the 221-F Canyon Building.

The highly durable plutonium glass is contained in small steel cans which are sealed. The actual shape used could vary from that presented in this document. After a period of lag storage, the prepared cans of plutonium glass will be welded into sturdy stainless steel cages which are integral parts of the racks. The racks, with the cans of plutonium glass, will be loaded into Defense Waste Processing Facility (DWPF) canisters and transported from Building 221-F to the DWPF at the Savannah River Site. By using the smaller steel cans, the plutonium glass, in a stable nonparticulate form, has enhanced handling safety and is kept physically separate from the DWPF process. In the DWPF, HLW glass will be poured around the cans inside of the DWPF canisters. This approach preserves all of the key process control elements of the existing waste qualification program. It is at this point that the "spent fuel standard" is achieved. The radiation spike is sufficient to maintain a radiation field above 1 Gy (100 Rad) per hour at 1 m (3 ft) for a period of about 30 to 60 years. These canisters will be stored in an interim surface storage facility similar to the glass storage facility used to store DWPF HLW-glass until transferred to the HLW repository. The repository is expected to be open for 100 years, and then to will be sealed. Since the radiation barrier will be decaying with a 30-year half-life, safeguards will be necessary during the period that the repository is open. Once the repository is sealed, then the sealed repository is expected to provide a significant proliferation deterrent. Postclosure monitoring (e.g., satellite surveillance or seismic monitors) is expected to contribute to the proliferation resistance.

Wet feed pretreatment is a process variation that is being evaluated. The wet feed pretreatment option adds a nitric acid dissolution step that would both reduce particulate generation and potentially allow for accepting a broader range of feeds without purification or preconversion to the oxide form.

Section 2 examines technical issues associated with each step of the immobilization process from front-end processing to the final repository. This disposition variant is qualitatively assessed against the following eight criteria:

- Resistance to theft and diversion
- Resistance to retrieval by the Host Nation
- Technical viability
- Environment, safety and health compliance
- Cost effectiveness

- Timelines
- Project progress with Russia and others
- Public and institutional acceptance

The vitrification can-in-canister immobilization process consists of front-end and back-end processing operations. The front-end processing operations are treatment operations designed to prepare the different incoming plutonium materials to a suitable oxide feed stream to the back-end operations. These front-end options are generally at the industrialization stage or have been demonstrated at the pilot scale. There is some adaptation and process improvement that will require demonstration. The back-end vitrification process is based on 30 years of HLW glass development. The key developments required are showing that the weapons plutonium oxides can be dissolved in glass, that homogeneity is maintained through the process, that the melter can be operated reliably in a radioactive environment and that the final product is compatible with the disposal requirements of the repository. Small scale work with surrogates and plutonium have been very favorable with glass leach rates more than 100 times better than the HLW standard. Since processing uses plutonium glass contained in small steel cans surrounded by HLW glass, there is no undue impact on the existing DWPF processing steps.

Disposition of the vitrified plutonium in an HLW repository involves regulatory technical issues that require additional consideration.

The high level aging of existing facilities without undue impact on the WPF facility makes this variant favorable in both cost and schedule.

Hybrid disposition approaches in which different feed materials (e.g., pure plutonium oxide from pits versus impure plutonium oxide) go different routes, open the possibility of utilizing existing facilities in different ways to achieve HWMP objectives. As an example, the completed but never used New Special Recovery (NSR) Facility at SRS could be used as designed to directly support the immobilization portion of a hybrid variant with relative little modification. The pit recovery operations, which support the MOX fuel fabrication portion of the hybrid, could then be co-located with the MOX fuel fabrication operations with little impact since the required backup chemical operations would be available at the NSR facility at SRS. Other possible present facilities are also possible and these approaches need to be further evaluated.

This end-to-end immobilization variant combines functions from facilities previously described in and bounded by the PuIS process currently underway. Front-end processing in this variant, elimination of aqueous recovery lines, significant reductions in aqueous waste solutions, processing equipment, associated space, utilities, and support systems. The front-end processing also is reduced, which reduces the environmental impacts from construction. The back-end processing also reduces the environmental impact from construction because existing facilities as well and needs no new facilities. The number of additio

canisters required for this case is significantly less than for the vitrification greenfield base case.

Cost and schedule information for the vitrification can-in-canister variant reported here were summarized in the *Technical Summary Report for Surplus Weapons-Usable Plutonium Disposition*, July 1996, which concluded that can-in-canister variants are the most attractive immobilization approach based on cost considerations.

- Timeliness
- Foster's progress with Russia and others
- Public and institutional acceptance

The vitrification can-in-canister immobilization process consists of front-end and back-end processing operations. The front-end processing operations are pretreatment operations designed to prepare the different incoming plutonium material forms to a suitable oxide feed stream to the back-end operations. These front-end operations are generally at the industrialization stage or have been demonstrated at the engineering scale. There is some adaptation and process improvement that will require demonstration. The back-end vitrification process is based on 30 years of HLW glass development. The key developments required are showing that the various plutonium oxides can be dissolved in glass, that homogeneity is maintained throughout the process, that the melter can be operated reliably in a radioactive environment and that the final product is compatible with the disposal requirements of the repository. Small-scale work with surrogates and plutonium have been very favorable with glass-leaching characteristics more than 100 times better than the HLW standard. Since the process uses plutonium glass contained in small steel cans surrounded by HLW glass, there is no undue impact on the existing DWPF processing steps.

Disposition of the vitrified plutonium in an HLW-repository involves regulatory and technical issues that require additional consideration.

The high leveraging of existing facilities without undue impact on the DWPF facility make this variant favorable in both cost and schedule.

Hybrid disposition approaches, in which different feed materials (e.g. pure plutonium oxide from pits versus impure plutonium feeds) go different routes, open the possibility of utilizing existing facilities in different ways to achieve FMDP objectives. As an example, the completed but never used New Special Recovery (NSR) Facility at SRS could be used as designed to directly support the immobilization portion of a hybrid variant with relative little modification. The pit recovery operation, which supports the MOX fuel fabrication portion of the hybrid, could then be co-located with the MOX fuel fabrication operations portion of the hybrid, could then be co-located with the MOX fuel fabrication operations with little impact since the required backup chemical operations would be available at the NSR facility at SRS. Other possible uses of present facilities are also possible and these approaches need to be further evaluated.

This end-to-end immobilization variant combines functions from facilities previously described in and bounded by the PEIS process currently underway. For front-end processing in this variant, elimination of aqueous recovery lines results in significant reductions in aqueous waste solutions, processing equipment, associated facility space, utilities, and support systems. The front-end processing also uses existing facilities, which reduces the environmental impacts from construction. The back-end processing also reduces the environmental impact from construction because it uses existing facilities as well and needs no new facilities. The number of additional DWPF

canisters required for this case is significantly less than for the vitrification greenfield base case.

Cost and schedule information for the vitrification can-in-canister variant reported here were summarized in the *Technical Summary Report for Surplus Weapons-Usable Plutonium Disposition*, July 1996, which concluded that can-in-canister variants are the most attractive immobilization approach based on cost considerations.

1.0 Variant Description

1.1 Introduction

Immobilization is the fixation of the surplus fissile materials in an acceptable matrix such as glass or ceramics to create an environmentally benign form for disposal in a repository. In addition to the traditional characteristics required of an immobilization form to achieve isolation of the fissile material from the biosphere over geologic time periods, the immobilization form for the Fissile Materials Disposition Program (FMDP) must also possess the property that it is inherently as unattractive and inaccessible as the fissile material in commercial spent fuel. This latter requirement is similar to the wording of the "spent fuel standard" invoked in the National Academy of Sciences (NAS) study on plutonium disposition. High-level wastes (HLW) or separated cesium (^{137}Cs), can be added with the fissile material into the waste form to create a radiation field that increases the proliferation resistance and decreases reuse by the host nation in the following ways:

- Plutonium will be diluted with elements that must be removed by extensive chemical processing to return it to weapons usable purity.
- The immobilized plutonium canisters will contain approximately 2 tonnes (2000 kg; 2.2 tons) of mass, thereby forcing the use of heavy equipment to move the canisters.
- A gamma radiation barrier will be added to the immobilized plutonium canister. The present concept is to add a radiation barrier that is greater than 1 Gy (100 rad) per hour at 1 m (3 ft) 30 years after fabrication.
- These canisters will then be sealed in casks and emplaced into drifts in a HLW repository where they will be monitored for 100 years before the repository is sealed.

This immobilization process is shown conceptually in Figure 1 in Section 1.2.

In several countries, including the United States, radioactive HLW is being incorporated into molten glass in a process known as vitrification, producing highly radioactive glass "logs" to be stored for an interim period and then buried in geologic repositories. [G. G. Wicks, "Nuclear Waste Glasses," in the book Glass IV, M. Tomozawa and R. H., Doremus eds., Vol. 26, pp. 57–118, Academic Press, Inc. (1985)]. EPA has declared vitrification to be the Best Demonstrated Available Technology for HLW (40 CFR 268.42, Table 3). Such vitrification plants are or have been in operation in several countries including France, the United Kingdom, Germany, Belgium, the United States, and Japan. On a laboratory scale fissile materials could also be vitrified. Such a process has not yet been demonstrated on an extensive scale.

Vitrification as an immobilization alternative has been identified as a viable technology for other forms of radioactive waste. The Defense Waste Processing Facility (DWPF) started HLW vitrification operations at Savannah River Site (SRS) in early 1996, and vitrification of HLW at the United States' West Valley facility began in mid-1996.

The vitrification-can-in-canister (VCC) facility variant presented in this report describes the immobilization of plutonium in a borosilicate glass in individual cans. These cans are placed in a Defense Waste Processing Facility (DWPF) canister, and glass containing high-level waste (HLW) is poured into the canister around the cans to produce a radiation field in the final product. This immobilization option uses the existing 221-F Canyon Building at Savannah River Site modified to produce the plutonium glass cans. The canisters are filled with high-level waste glass at the DWPF. Table 1 shows the location of each process area.

The VCC variant was selected for evaluation because it offers several process, environmental, schedule, and cost benefits over the base case Vitrification Greenfield Facility (VGF) including:

- An effective means to immobilize plutonium using existing DOE facilities. While some of these facilities will require upgrading, no new facilities will have to be constructed.
- VCC uses HLW as the radiation spike. This HLW is already slated for immobilization in borosilicate glass; therefore, this option provides a beneficial use for this waste.
- Plutonium-glass is contained within sealed stainless-steel cans. These cans form a barrier between the plutonium and the HLW which is a potential concern in other variants with respect to intermixing actinides which would introduce the need for criticality controls.
- These stainless-steel cans prevent introduction of plutonium into process systems within the DWPF reducing safeguards and security and criticality concerns.
- Using existing facilities provides significant cost and schedule benefits over other variants.
- Long-term environmental concerns and costs are less than in the greenfield case with this variant because fewer additional canisters will be generated and thus fewer canisters will end up in the repository.
- Another approach to this variant Wet Feed Preparation, offers the potential to substantially reduce feed preparation operations.

1.1.1 Assumptions and Design Basis

Major assumptions used in the development of the vitrification can-in-canister variant include the following:

- The end-to-end immobilization facilities will receive plutonium as pits and in the various stabilized plutonium forms stored as a result of the Defense Nuclear Facility Safety Board (DNFSB) Recommendation 94-1 Remediation Program and declared excess for national needs.
- The nominal feed of plutonium over the life of the facility is 50 tonnes (56 tons).
- The campaign will take no longer than 10 years to complete.

Additional assumptions for the variant are:

- The immobilized surplus fissile materials package will contain an added radiation field to decrease its accessibility. For scoping purposes, a gamma radiation field barrier is assumed. The radiation field will be on the order of 1 Gy (100 rad) per hour at 1 m (3 ft.) from the package center surface for 30 years after initial fabrication. The source of the gamma radiation is primarily ^{137}Cs from HLW obtained form the waste tanks at SRS.
- The plutonium loading in the borosilicate glass is a design parameter involving multiple tradeoffs that will be optimized during later phases of the design. The final design loading selected will consider fission product availability as well as form quality, facility size, safety factors, geologic waste form acceptance criteria, etc. For this early design phase 10% plutonium (by weight) loading in the plutonium containing glass has been assumed.
- The vitrification can-in-canister variant will process 5,000 kg (11,000 lb) of surplus fissile material annually. The operational life of the facility will be 10 years. Operations will be three shifts per day, seven days a week. Allowing normal time for remote maintenance, material control, and accountability, etc., normal plant availability is considered to be 200 days per year. Nominal throughput is, therefore, 25 kg (55 lb) plutonium per day or 8.3 kg (18.4 lb) per shift.
- Design for criticality safety will meet applicable DOE orders and available NRC regulatory guides. Criticality control by batch mass control or equipment geometry are the preferred methods in the design. The use of a soluble nuclear absorber such as gadolinium, samarium, hafnium, etc. in the processing equipment has been assumed. Criticality analysis is incomplete. Criticality design issues within this report are based on engineering judgment and extrapolation from similar processes only. For this report, the neutron absorber is assumed to be gadolinium.
- The immobilized package assumed for this study is an array of plutonium glass cans in a DWPF-sized canister and is stored onsite until it is transported to a HLW repository. DWPF canisters are 61.0 cm (2 ft) diameter and 3.0 m (10 ft).

Each canister is assumed to contain 20 cans of vitrified plutonium for a total of about 51 kg (110 lbs) of plutonium.

- The VCC is assumed to be operated in existing facilities at the SRS where the existing DWPF will be used to pour HLW glass around the immobilized form. After actual site selection, more specific site-related information will be required.

1.1.2 Candidate Feed Materials

This end-to-end immobilization variant (vitrification can-in-canister) will receive feeds from among the following material forms which are expected to be declared excess to national programmatic needs of the United States:

- Pits
- Clean plutonium metal
- Impure plutonium metal
- Plutonium alloys
- Alloy reactor fuels (unirradiated)
- Oxide reactor fuels (unirradiated)
- Clean oxide
- Impure oxide
- Uranium plutonium oxide
- Oxide-like materials*
- Sand, slag, and crucibles (SS&C)*
- Halide salts*

To maintain a consistent feed downstream and to minimize overall processing, these feeds will be blended.

1.1.3 Physical Layout Locations

The facilities at SRS would be used. Contact handled processes would be performed in the 221-F facility. The immobilized plutonium glass cans would be transferred to the Defense Waste Processing Facility (DWPF) in DWPF canisters. At the DWPF HLW glass containing ^{137}Cs will be poured around the cans.

The physical location of process areas are shown in Table 1.

1.2 First-Level Flow Diagram

The vitrification-can-in-canister variant is shown on the first-level flow diagram (Figure 1). The feed materials will come from plutonium pits and the material that is stored as stabilized material from the DNFSB Recommendation 94-1 Remediation Program. Prior to vitrification, some of the feeds require pretreatment. All of the pretreatment processing, except halide removal and oxidation which will be done at Los Alamos National Laboratory (LANL), will take place in the 221-F Canyon Building at Savannah River Site (SRS) in shielded glove boxes. The pretreatment will convert the feed streams to oxide. The blended oxide product will be fed to vitrification equipment

---

* These materials categories are expected to be converted to impure oxides as part of the DNFSB recommended 94-1 stabilization program.

Table 1. Physical locations for proposed vitrification can-in-canister process equipment.

Process	Locations
Receiving, shipping, storage, sampling	221-F Plutonium storage facility (PSF)
Pit disassembly, dehydride/hydride/oxidation	221-F new special recovery (NSR)
Oralloy decontamination	221-F new special recovery (NSR)
Special recovery	221-F Canyon 3rd level
Fuel decladding, halide material processing	221-F Canyon 3rd level
Feed preparation (dry)	221-F Canyon 3rd level
Oxide lag storage (dry)	221-F Canyon 3rd level
1st stage melter (dry)	221-F Canyon 3rd level
Off-gas treatment (dry)	221-F Canyon 3rd level
Feed preparation (wet feed)	221-F Canyon 3rd level
Oxide lag storage (wet feed)	221-F Canyon 3rd level
1st stage melter (wet feed)	221-F Canyon 2nd level
Off-gas treatment (wet feed)	221-F Canyon 2nd level
Can decon (dry)	221-F Canyon 3rd level
Can decon (wet feed)	221-F Canyon 2nd level
Can weld & test (dry)	221-F Canyon 3rd level
Can weld & test (wet feed)	221-F Canyon 2nd level
Interim can storage	221-F Canyon 3rd level
Place in canister	221-F Canyon 1st level
Weld & test	221-F Canyon 1st level
Interim canister storage	221-F and DWPF service building interim vault
Blend tank	DWPF vitrification building hot cell
2nd stage melter	DWPF vitrification building hot cell
Canister decontamination	DWPF vitrification building hot cell
Weld & test	DWPF vitrification building hot cell
Off-gas treatment	DWPF vitrification building hot cell
Interim product storage	DWPF glass waste storage building unit 2

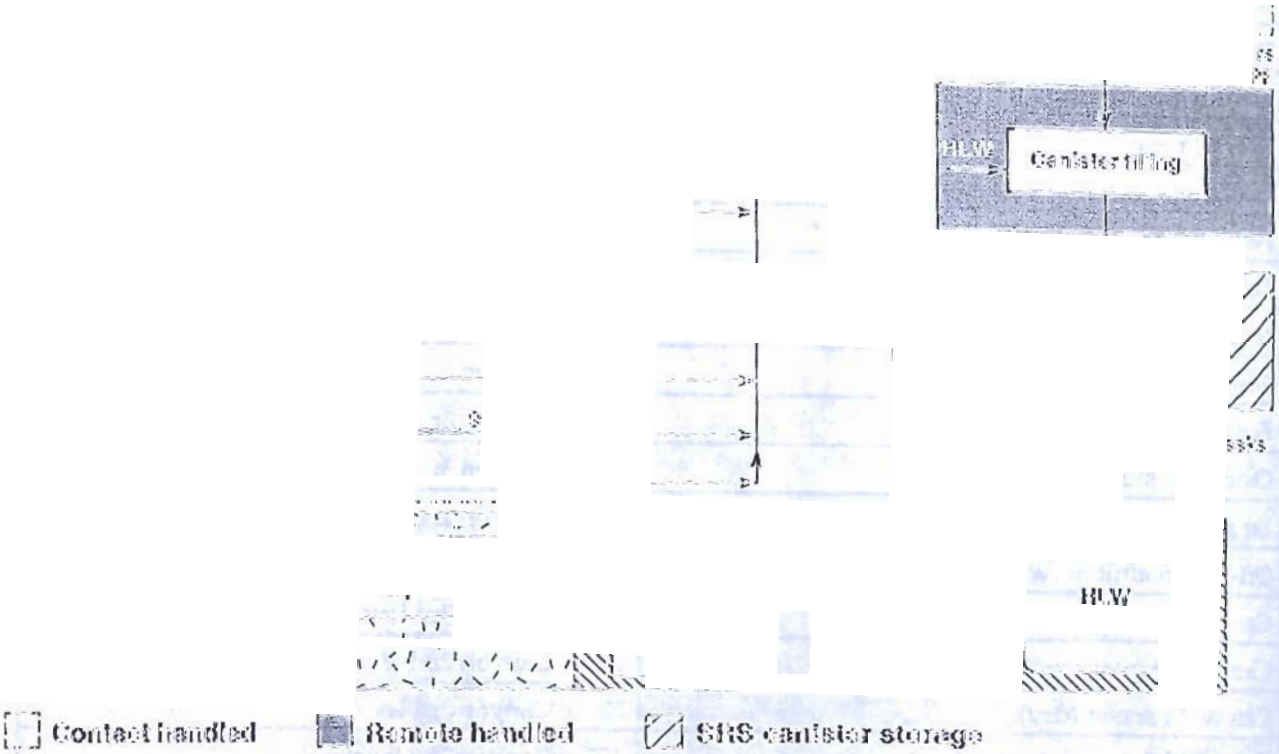

10.0.0895.1944;b01

Figure 1. First-level flow diagram, vitrification can-in-canister variant.

also located in 221-F. Th [illegible] lass will be loaded into small cans that will subs[illegible] isters. These canisters will be filled with high-level waste glass at the D[illegible] to create a radiation barrier.

1.2.1 Front-End Pr[illegible] Processing—D[illegible] nversion (D&C)

The feed materi[illegible] n dis[illegible] DNFSB Recommendation 9[illegible] nsist [illegible] got form), oxides, unirradiated fuel u[illegible] oniu[illegible] e feed materials may need to be converte[illegible] roce[illegible] feed type are:

- **Pits.** The pi[illegible] sembled. [illegible] and convert[illegible] e in the hy[illegible] on. [illegible] oxide is pac[illegible] pred[illegible] pro[illegible]
- **Metals and** [illegible] als and all [illegible] he [illegible] oxide packaged a[illegible] feed for th[illegible]

- **Metal Reactor Fuel.** The metal fuel could be in the form of a bundle and clad in stainless steel. Hardware and cladding are removed in a decladding operation. The metal is then converted to the oxide using the hydride/dehydride/oxidation operation. The oxide is packaged and stored as feed for the vitrification process.
- **Oxide Reactor Fuel.** The oxide fuel could be in the form of a bundle and clad in stainless steel. Hardware and cladding are removed in the decladding operation. The oxide is then size reduced. The oxide is packaged and stored as feed for the vitrification process.
- **Oxides.** The oxides are simply stored as feed for the vitrification process.
- **Blends.** Prior to feeding to downstream unit operations, all feeds will be blended to provide a more uniform downstream feed and to minimize the amount of processing required.

1.2.2 Front-End Plutonium Processing—First-Stage Vitrification

The feeds to the first-stage vitrification melter consist of glass formers, a neutron absorber, and the blended plutonium oxide to prepare a homogeneous glass. For this vitrification can-in-canister option, approximately 25.6 kg (56 lb) of this glass (containing 2.6 kg [5.6 lb] plutonium) will be poured into a steel can, which will be decontaminated and transferred to lag storage. This portion of the operations is carried out in shielded glove boxes. The cans will then be loaded into DWPF canisters and the top welded onto the canister for transport to the DWPF where molten HLW-glass will be poured into the canister around the loaded cans. The actual number of cans loaded into the DWPF canisters will be selected as the result of a development program which includes a series of glass-pouring experiments. For the base case, 20 cans containing a total of 51 kg (113 lb) of plutonium is assumed.

The first-level flow diagram, Figure 1, indicates the processing steps for the front-end and back-end immobilization operations. The plutonium feed materials for this option will be primarily blended plutonium oxide. The oxide will be received, cross-blended as required, and then converted in the first-stage melter into small plutonium glass logs encapsulated in stainless-steel cans in the existing 221-F Canyon Building in F-Area. The small cans will be subsequently loaded into a frame and placed inside an empty 0.6-m-(2-ft) diameter × 3-m (10-ft)-high stainless-steel DWPF canister. The top head and nozzle of the canister will then be welded on and the weld certified. Temporary storage may be provided in 221-F prior to transporting the canister to DWPF to be filled with HLW glass.

1.2.3 Back-End Processing—Second-Stage Vitrification

The DWPF canisters containing the plutonium glass cans will be transferred to DWPF where molten HLW glass will be poured into the canister around the plutonium glass cans. After the filled canisters are decontaminated and welded closed, they will be stored onsite in the interim until they are sent to final disposal.

1.3 Second-Level Flow Diagrams

The DWPF first-level flow diagram processing within the VCC was expanded to two second-level flow diagrams (Figures 2 and 3). The diagrams show greater processing details for disassembly and conversion operations (Figure 2) and first-stage and second-stage vitrification (Figure 3).

1.3.1 Front-End Plutonium Processing—Disassembly and Conversion (D&C)

The following are more detailed descriptions for the front-end plutonium disassembly and conversion unit operations for this immobilization variant (Figure 2).

DC-01 Truck and CRT Unloading. Material shipments will be delivered to a truck and container restraint transport (CRT) unloading dock where the delivery vehicles, safe secure trailer/transport (SST) will be washed and smear checked. The packaged plutonium cargo will then be unloaded. Initial assessments of radiation levels and container breaches are made during the unloading process to ensure a safe

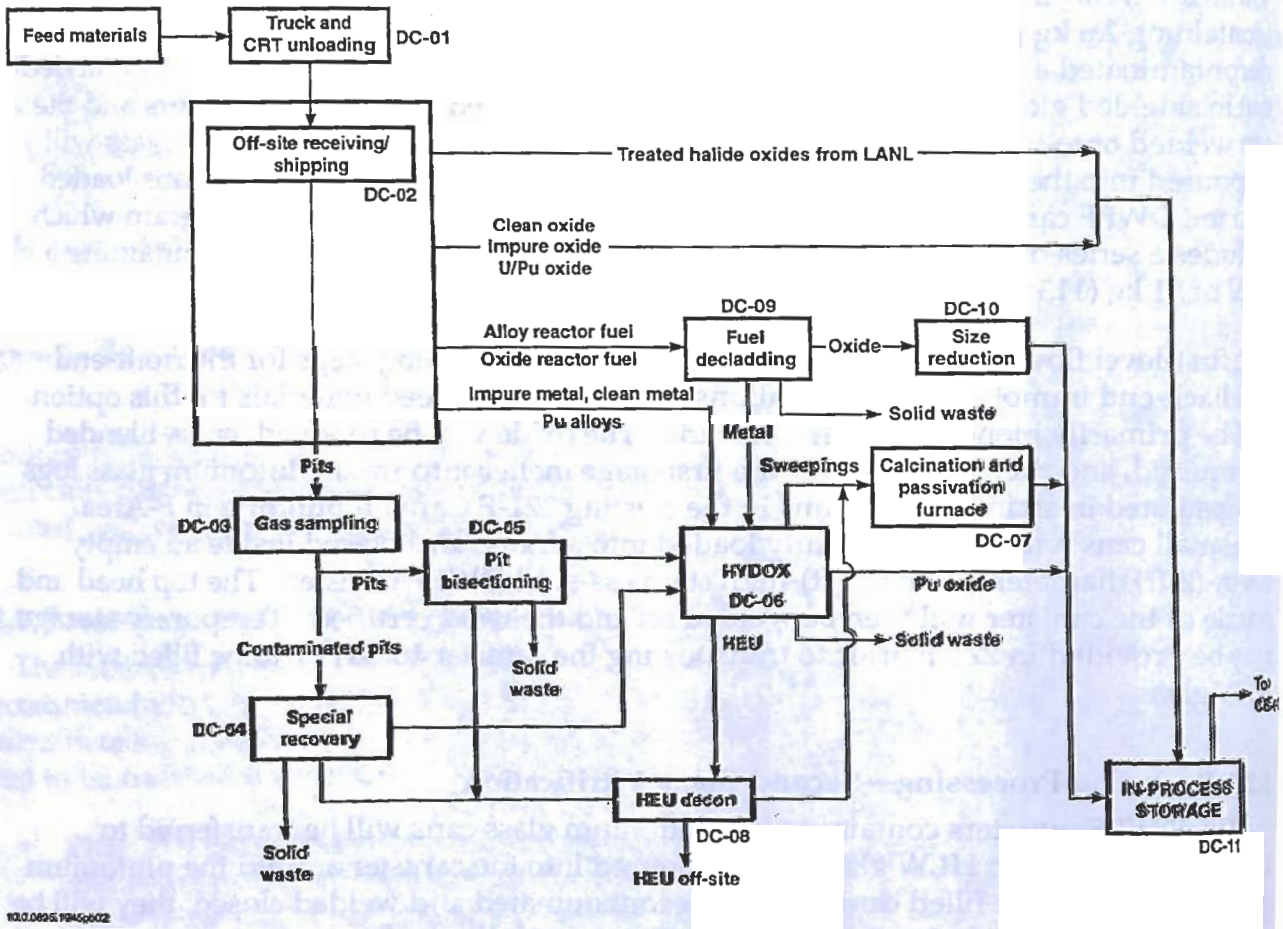

Figure 2. Second-level flow diagram, vitrification can-in-canister front-end disassembly and conversion.

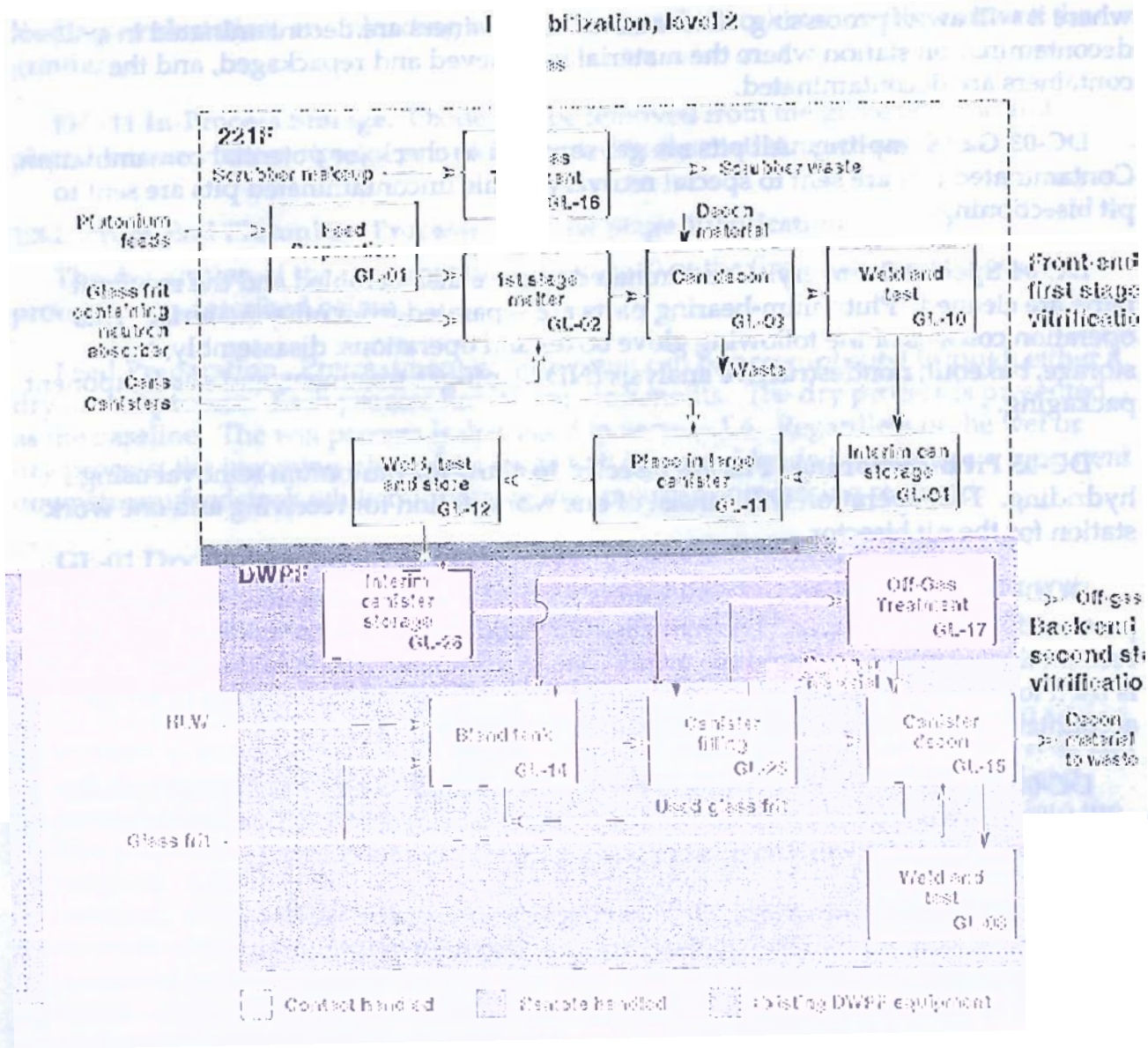

bilization, level 2
221F
Scrubber makeup
Scrubber waste
GL-16
Plutonium feeds
Decon material
GL-01
1st stage melter
GL-02
Can decon
GL-03
Weld and test
GL-10
Front-end first stage vitrificatio
Glass frit containing neutron absorber
Waste
Cans
Canisters
Weld, test and store
GL-12
Place in large canister
GL-11
Interim can storage
GL-01
DWPF
Interim canister storage
GL-26
Off-Gas Treatment
GL-17
Off-gas
Back-end second st vitrificatio
HLW
Blend tank
GL-14
Canister filling
GL-25
Canister decon
GL-15
Decon material to waste
Used glass frit
Glass frit
Weld and test
GL-08
Contact handled
Remote handled
Existing DWPF equipment

esultant
al. This
, tool
compone

ne wor

Calcination and
rt glove box swee
k station and a wo on co

DC-08 HEU Decont nation. HEU having
inated with a d bath, rinsed, and p a
facility.

ower Physics
orm of thin
ites. The decladding operation will employ a
nt through a
ing work sta
decladding work station.

DC-10 Size Red nt pellets will be fed in
grinder. The vibrat ets as the grinding me
small fraction of the ay with each batch. T
amount of alumina umina pellets are adde
maintain a set volume of grinding medium. The glove box for this ope

loading work station, an unloading work station, and a work station that contains the grinder.

DC-11 In-Process Storage. Oxide will be removed from the glove box line and placed into in-process storage prior to being fed to downstream processing.

1.3.2 Front-End Plutonium Processing—First Stage Vitrification

The description of the unit operations (Figure 3) of the first-stage vitrification processes are described below.

Feed Preparation. Pretreatment of plutonium can be accomplished through either a dry or wet process. Each process has its unique benefits. The dry process is presented as the baseline. The wet process is discussed in Section 1.6. Regardless of the wet or dry process, the incoming plutonium oxide will be cross-blended to prepare a consistent downstream feedstock while minimizing the amount of processing required.

GL-01 Dry Pretreatment Feed Preparation Process. Plutonium feed can be prepared for vitrification by one of two common processes—either a dry feed or wet feed process. The 221-F Canyon Building can accommodate production of either feed form.

Transfer Can Entry/Opening /Batching. A shipping drum containing a feed-can will be brought to an entry hood from the plutonium storage vault. At this station, the feed-can will be removed from the shipping drum, and the serial number will be verified and entered into the accountability computer. The feed can will then be introduced into the feed preparation glove box through an airlock. The unopened feed-can will be weighed. After the feed can is weighed, it will be opened and have a slip cover installed. Storage positions will be available to allow lag storage for oxide cans. The contents of one oxide transfer can will be sized to ensure the oxide can be readily processed in the first stage melter. The feed cans will be transferred to the batching station where the contents will be emptied, blended with other materials as required, made up into the appropriate batch size, weighed, and bar coded. If oversized, grinding will be performed at this station. A weigh scale for accountability purposes and a vacuum system for any cleanup that may be required is also included at this station. The oxide transfer can will be moved to the oxide lag storage.

Oxide Lag Storage Station. The oxide lag storage station is a multiposition criticality safe lag storage area with locking features. Oxide transfer cans will be stored in the oxide lag storage station after being weighed having the bar code verified, and having the accountability computer updated.

GL-02 Dry First-Stage Melter. Plutonium glass will be produced in glass making melters and associated equipment installed in shielded glove box facilities. Two to four melters will be used. The product will be high-density borosilicate glass containing about 10% by weight plutonium packaged in cans. For this variant, the first-stage melter is the only operation where vitrification of plutonium occurs. The vitrification

process will take place in the 221-F Canyon Building. The dry first-stage melter process operation is represented in Figure 3.

Melter Feed. Oxide transfer cans containing the plutonium oxide will be removed from lag storage and placed in a feed hopper. Borosilicate-glass frit containing neutron absorbers will be loaded in a separate hopper. The plutonium oxide and glass frit will be fed simultaneously to the melter using vibratory or auger feeders to control the flow rates at the required ratio.

Melters. The dry first-stage melter operation will heat the plutonium oxide and frit mixture. The plutonium oxide powder will be dissolved in the molten glass in the melter. A new stainless steel can will be inserted beneath the drain of the melter using a remote manipulator. The melter will be heated and the frit mixture added. Once melted, the molten glass will be drained into the stainless-steel can, and a temporary plug will be installed by a remote manipulator to seal the can. The bottom outlet is provided with a freeze valve (and a mechanical plug) to control or halt the flow of the melt.

Each can will contain approximately 25.6 kg (56.3 lb) of plutonium-glass, about 90% frit and 10% plutonium. Multiple process lines will exist to meet the required processing rate, and samples can be taken for analysis in the analytical laboratory.

GL-16 Dry Pretreatment Off-Gas Operation. The dry pretreatment off-gas system will reduce the quantity of radioactive particles that evolve from the melter before release to the ventilation exhaust system. Off-gases will be drawn, quenched, and discharged into the off-gas condensate tank. The quenched gases from the off-gas condensate tank will be scrubbed in a steam atomized scrubber and cooled by a chilled water condenser. Gases from the condenser will then pass through the high-efficiency mist elimination (HEME) and a set of HEPA filters before discharge into the exhaust tunnel and through a sand filter before the exhaust stack. Where the potential for plutonium and plutonium oxide dusting exists, air flow will pass through filters before entering the ventilation ducts and recycle capability for the plutonium will be provided. The liquid effluents are sent to an existing waste processing system.

GL-09 Pretreatment Can Decontamination. A plug cap will be installed and the plutonium glass can will be decontaminated to remove any residual contamination that may have adhered to the can surfaces.

GL-10 Pretreatment Weld Test Cell. The plug cap will then be welded to the can before final weighing, bar coding, and nondestructive assay. The resistance welder uses a small volume of inert gas that passes through the off-gas treatment system. The can is then sent on to the storage tube loading station. In contrast to the plutonium vitrification canisters in the greenfield variant which also contains ^{137}Cs, these cans can be monitored by several techniques to provide a full plutonium accountability balance across the vitrification system.

be by

pro ... This

thi

ca ... s c

sur ... s ... l

and

s cans will c

e an open D... er.

Refer to Figure 4 for a ... nce

um cans.) ... duc

f simple and

roliferation

For example

the size and strength of which would

nded metal shield could then be tack w

rovide support and connect all of the c

ced into the canister it could be welde

canister, then the to ... ould be welded onto the canister body. The loaded canister would be st ... in 221-F until it is shipped to DWPF.

CL-19 Non-C ... d and Test. After the plutonium glass cans have been ... ead of the canister will then be welded ... tested using procedures now used during the ... f the test, the canister will be placed in temporar ... Canyon Building until shipped by rail or truck to DWPF.

3 Back-End Pro ... Second Stage HLW Vitrification

CL-26 Interim ... all can-in-canister storage vault w ... he DWPF Service Building. This

su ... nium

24

ge surrounds cans
which are welded to

...ptua... ...y of can-in-canister (not to scale).

...cans) is ready to be fi... ...ill be
... the storage vau... ...o the ... ...ll be
...he plutonium g... ...can...

...nk. Inside the ... ...ter fe... ...mix
...borosilicate gla... ...stora...
..., and remote co... ...l eq...

...ter Filling. Gla... ...orm...
...rough a riser a... ...our...

...anister filling is monito...

systems. When the desired level of fill in the canister is achieved, pouring is stopped by equalizing the pressure between the melter and the pour spout.

The plutonium glass cans become encapsulated in the HLW glass, in stainless steel canisters ~3 m (10 ft) in length × 0.6 m (2 ft) in diameter. Because the plutonium glass cans displace volume that would normally contain HLW glass in the DWPF canisters, additional DWPF canisters will be needed to process all of the HLW in the SRS Tank Farm. The number of additional DWPF canisters is directly proportional to the plutonium loading in the plutonium glass. The total number of DWPF canisters containing plutonium glass cans with 10 weight percent plutonium is expected to be approximately 1000. Assuming 20 cans of plutonium glass per DWPF canister, the volume of HLW glass displaced will be about 20%. The additional canisters produced by the DWPF as a result of this variant will be about 200 canisters.

GL-15 Canister Decontamination. Frit slurry blasting is used to remove contamination and metal oxides from the canister surface. As the canister rotates through a helical path in an enclosed chamber, jets blast all exposed surfaces with an aqueous slurry of glass frit. After canister decontamination, the used frit slurry (containing the contamination from the canister surface) is sent to the slurry mix evaporator (blend tank) for melter feed preparation.

GL-08 Weld and Test. The canister is sealed by upset-resistant welding a 12.70-cm (5 in.) diameter plug into the canister nozzle. After decontamination and drying, the temporary seal is pushed down in the canister neck, exposing clean metal for a permanent plug weld. The plug, which is slightly larger in diameter than the nozzle bore and has a tapered edge, is centered in the nozzle. The canister is supported by its flange on the welder bottom electrode, then the upper electrode is lowered onto the plug. As a force of 4×10^5 N (9×10^4 lb) is applied to the plug, a current of 250,000 amp is passed through the plug and nozzle. The 40 cm (15.75 in.) line of contact is heated (but not melted), the plug is forced into the nozzle, and a 1-cm (.4-in)-thick, solid-state weld is made in 1.5 seconds.

1.3.4 Onsite Canister Storage

The Glass Waste Storage Building (GWSB) Unit 1 will store the DWPF glass waste canisters until a HLW repository is available. The building has been constructed and is located near the DWPF. Glass Waste Storage Building Unit 1 has a capacity of 2286 canisters. Glass Waste Storage Building Unit 2 will be built as Glass Waste Storage Building Unit 1 fills with HLW-glass canisters or when plutonium-HLW-glass canisters are ready for storage. This new facility will be built to Category I seismic requirements and will encompass required safeguard (nonproliferation) controls based on the attractiveness level of the stored material. Because Glass Waste Storage Building Unit 2 is scheduled to be built in support of the DWPF mission, only the upgrades required to facilitate safeguards and security are considered as costs to this project.

Approximately 6000 canisters of HLW glass will be prepared within the DWPF to accomplish the high level waste mission. To accomplish the plutonium disposition

mission for the assumed 50 tonnes (56 tons) of plutonium, approximately 1000 of these 6000 canisters would contain cans of plutonium glass. The present schedule indicates that the 1000 plutonium canisters can be produced periodically or randomly during the HLW glass canister production without significant impact on the HLW mission. At any point in time, there will be twice as many HLW canisters as plutonium glass canisters. Additionally, the plutonium containing canisters could be stored randomly among the HLW canisters in the Glass Waste Storage Building (GWSB). Externally, the canisters with plutonium will appear identical to the HLW canisters. The only markings to identify the plutonium canisters from the high level waste canisters will be the unique bar code number on the side of the canisters, which are not visible by looking down into the storage cells. Each individual storage cell is plugged with a 1410 kg (3100 lb) reinforced concrete plug that requires a specially designed grapple to lift. There is no equipment in the GWSB with which the plug or a canister could be removed since removal can only be accomplished with equipment stored in DWPF.

The concrete vault area for the GWSBs is designed to contain glass waste canisters underground and protect personnel, the public, and the environment. The vault is an earthquake-resistant and tornado-resistant concrete structure. Radiation shielding protection will be provided by concrete walls, earth embedment, and a concrete deck that forms the floor of the operating area. The stored canisters will be protected against external damage and cooled to prevent internal heat buildup.

Radioactive decay heat from the canisters will be removed by the forced air exhaust system. The exhaust air will be passed through the HEPA filter ventilation system and then discharged to the atmosphere through a stack. No condensate is expected to accumulate in the ventilation system sump; however, if condensate accumulates, it wil be drummed, monitored for radioactivity, and treated. Depending on radioactivity levels, the condensate will be released or sent to F- and H-Areas Effluent Treatment Facilities.

1.4 Facilities

This section describes the process areas and facilities available for this variant an explains the modifications to existing facilities that will be needed. This variant take maximum advantage of existing buildings and processes. In this way, no completel new facilities will be required. Table 1 lists the physical locations at SRS for vitrifica can-in-canister processes.

Front-end processing and pretreatment operations and first stage vitrification ta place in F-Area (see Figure 5) where facilities are designed and built to handle larg quantities of plutonium and have systems to maintain criticality control and safeg systems to maintain accountability and security.

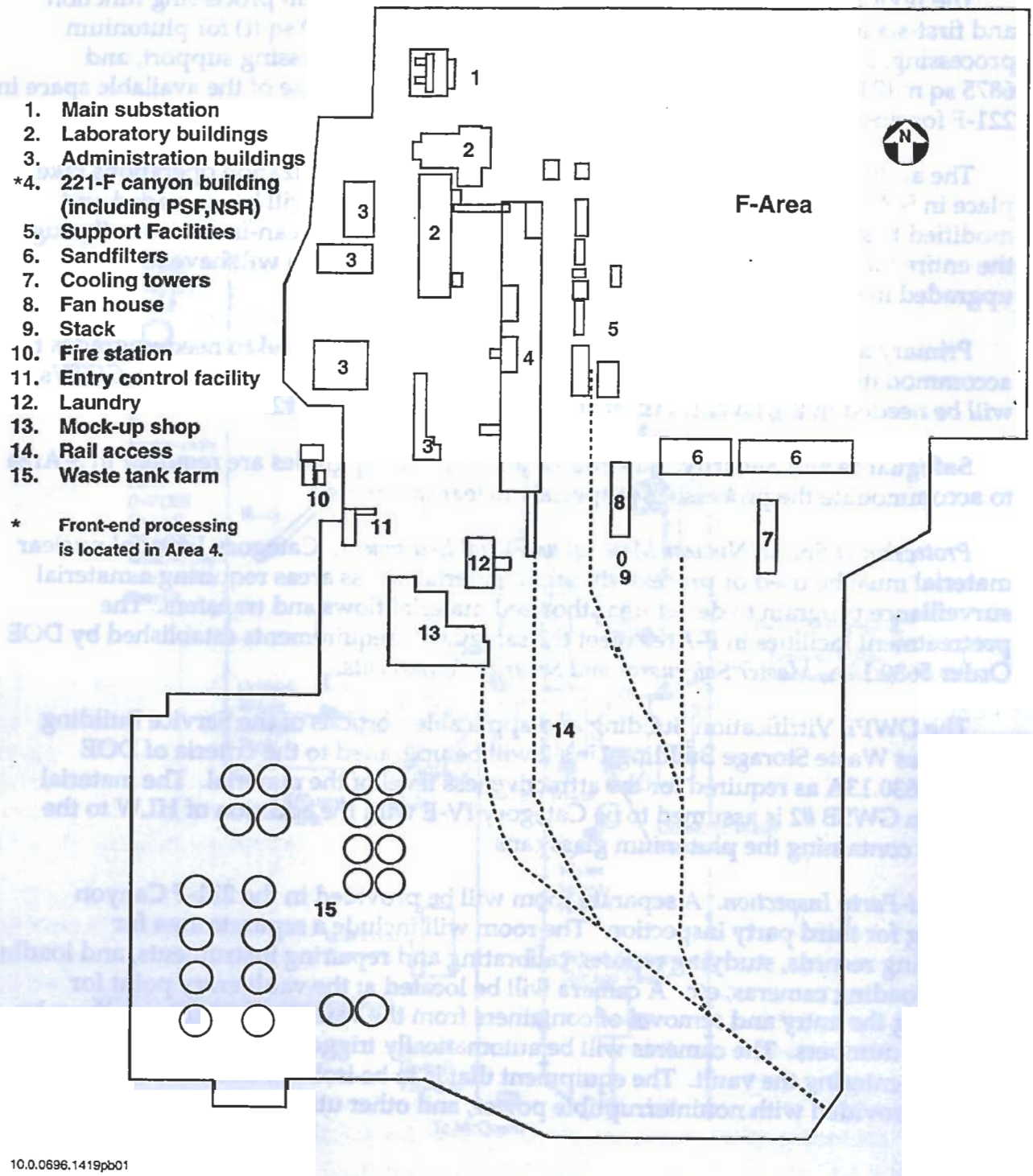

Figure 5. F-Area layout.

power, and other utilities.

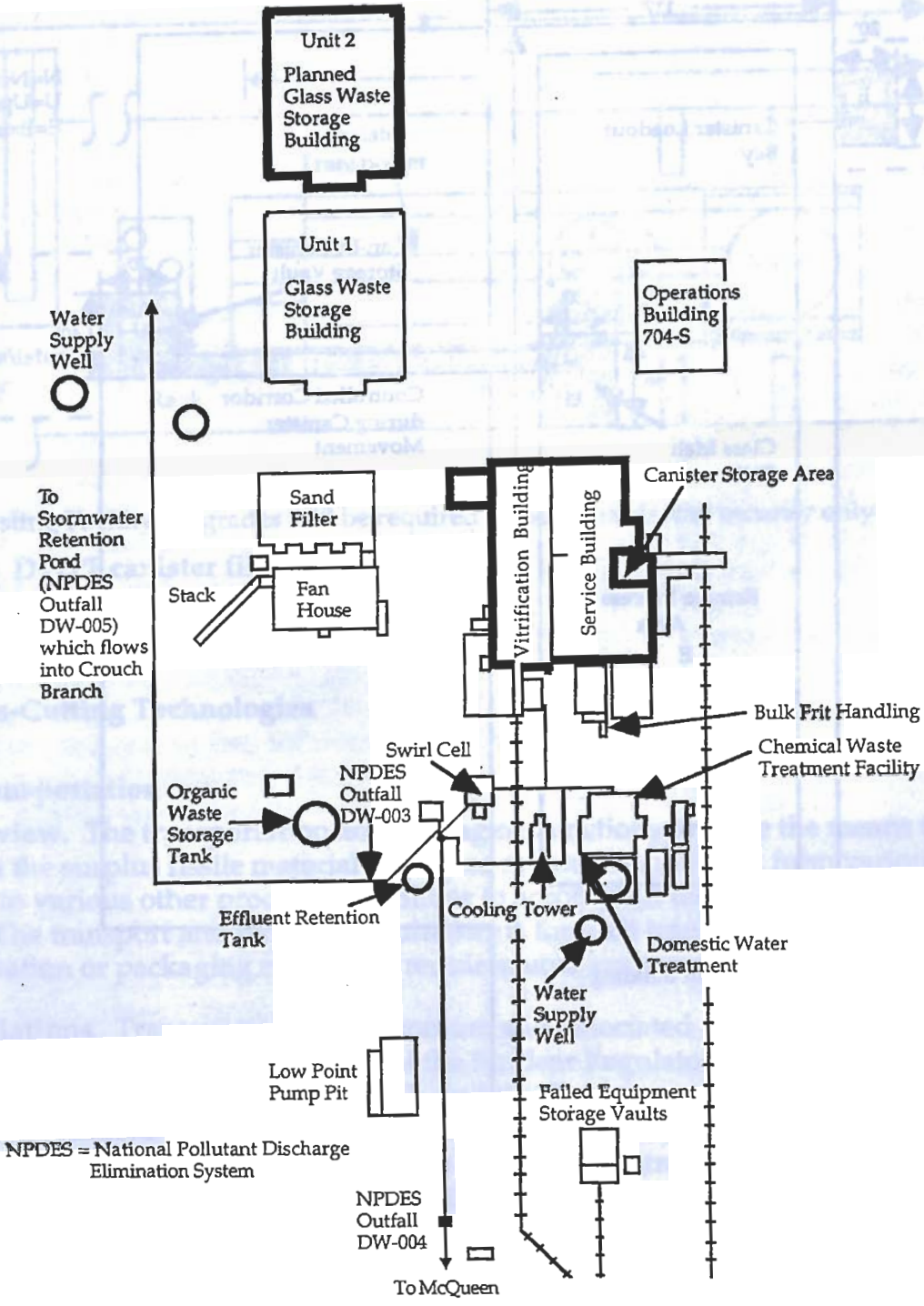

Figure 6. S-Area layout showing plutonium canister storage area at DWPF.

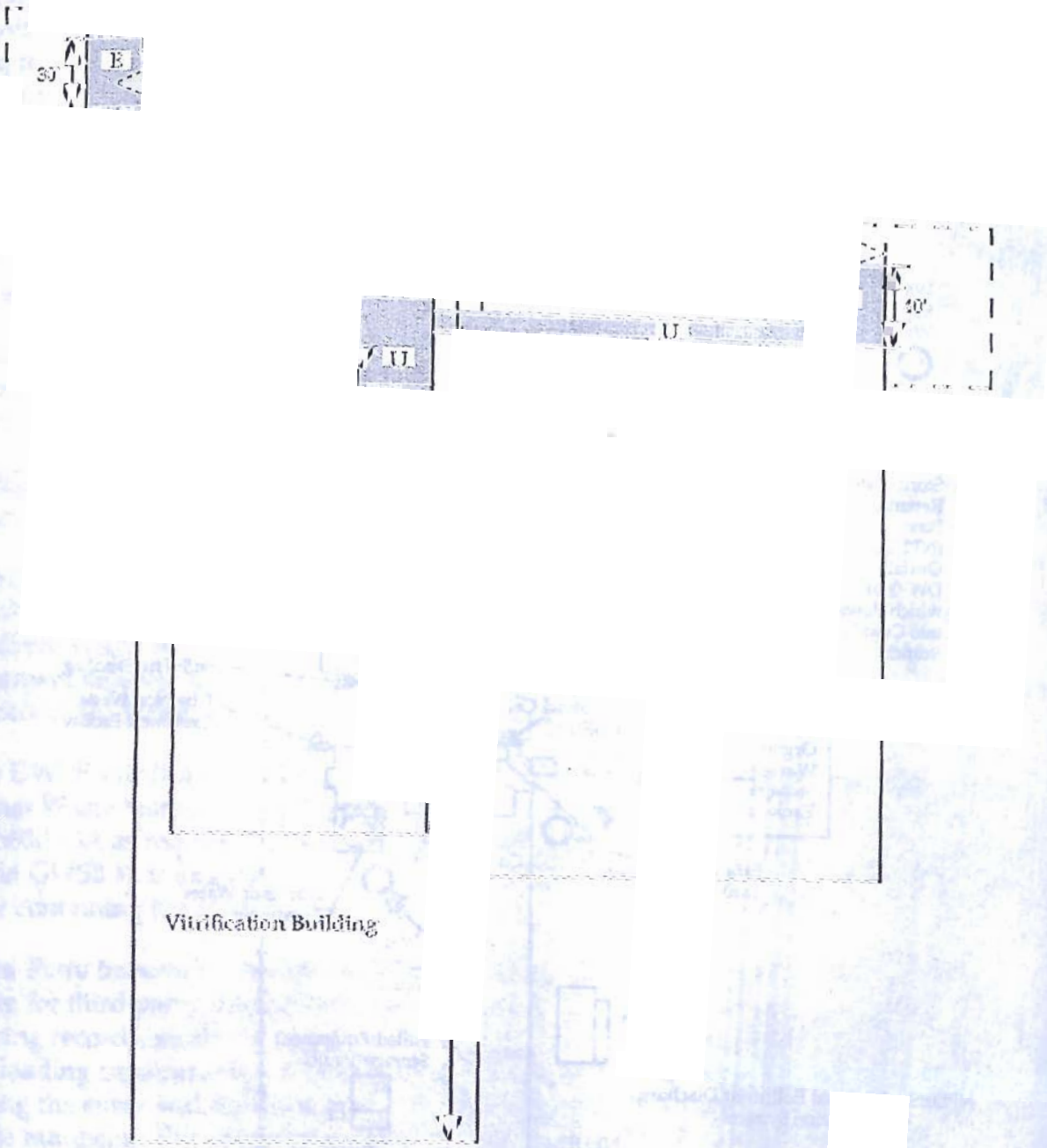

te: Existing facility - Only upgrades are required

gure 7. Plutonium canister interim storage vault and transfer co to DWPF.

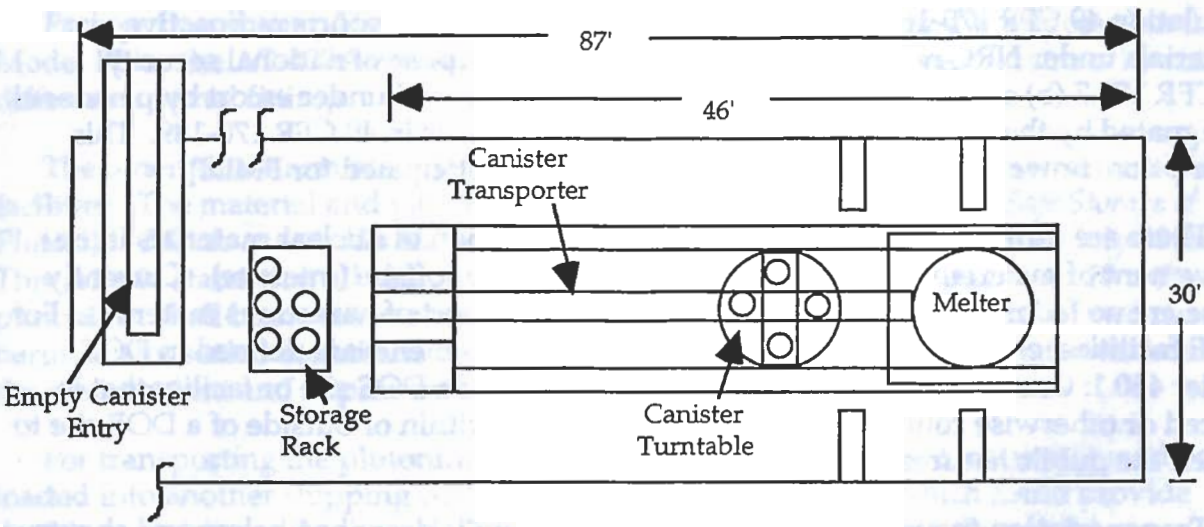

Note: Existing Facility, upgrades will be required for safeguards and security only.

Figure 8. DWPF canister fill.

1.5 Cross-Cutting Technologies

1.5.1 Transportation

Overview. The transportation and packaging functions provide the means to transport the surplus fissile material and other radioactive material from various DOE facilities to various other processing facilities to accomplish the immobilized disposal option. The transport and package requirements for each transportation leg and transportation or packaging regulatory requirements are presented below.

Regulations. Transportation of plutonium and associated wastes will be subject to government regulations such as those of the Nuclear Regulatory Commission (NRC), the Department of Transportation (DOT), and the Department of Energy (DOE). Different regulations may apply for different portions of the immobilized end-to-end flow depending upon which agency has authoritative control. The FMDP assumes that any new facility that is required to accomplish the immobilization option will be licensed by the Nuclear Regulatory Commission. For any currently existing facility it is assumed that the DNFSB will be the reviewing agency. For scheduling purposes, the time required is assumed to be the same for the NRC and the DNFSB.

The NRC regulation (10 CFR 71) establishes the requirements for packaging, preparation for shipment, and transportation of licensed material and for the procedures and standards for obtaining NRC approval of packaging and shipping procedures for fissile material and Type B quantities of other licensed materials. (A quantity of weapons grade plutonium in excess of ~25 mg (8.8×10^{-4} oz) constitutes a Type B quantity per 10 CFR 71.) The NRC regulation incorporates, by reference, DOT

regulation 49 CFR 170-189. Whenever possible, the DOE transports radioactive materials under NRC regulations. However, for the purpose of national security, 49 CFR 173.7 (b) allows the DOE to ship radioactive material under escort by personnel designated by the DOE, thus waiving the DOT regulations in 49 CFR 170-189. This exemption, however, is rarely used and its use is not anticipated for FMDP.

There are different requirements for the transportation of nuclear materials if the movement of materials is considered onsite (intrasite) or offsite (intersite). Currently there are no federal regulations governing onsite transport of hazardous materials. For DOE facilities, onsite and offsite transport action requirements are defined in DOE Order 460.1: Onsite is any area within the boundaries of a DOE site or facility that is fenced or otherwise controlled and offsite is any area within or outside of a DOE site to which the public has free and uncontrolled access.

Transportation System. The transportation system is described below and shown graphically in Figure 9. There are two intersite transportation segments for the end-to-end immobilized option. Intrasite transportation occurs at the Savannah River Site (SRS) since the front-end processing and immobilization facility are co-located.

Intersite Transportation Segment #1. During this segment, fissile material located at various DOE facilities is transported to the onsite temporary storage at SRS. The materials requiring transport include: pits, clean metal, impure metal, impure oxide, clean oxide, alloys, U/Pu oxides, halide oxides, and reactor fuel.

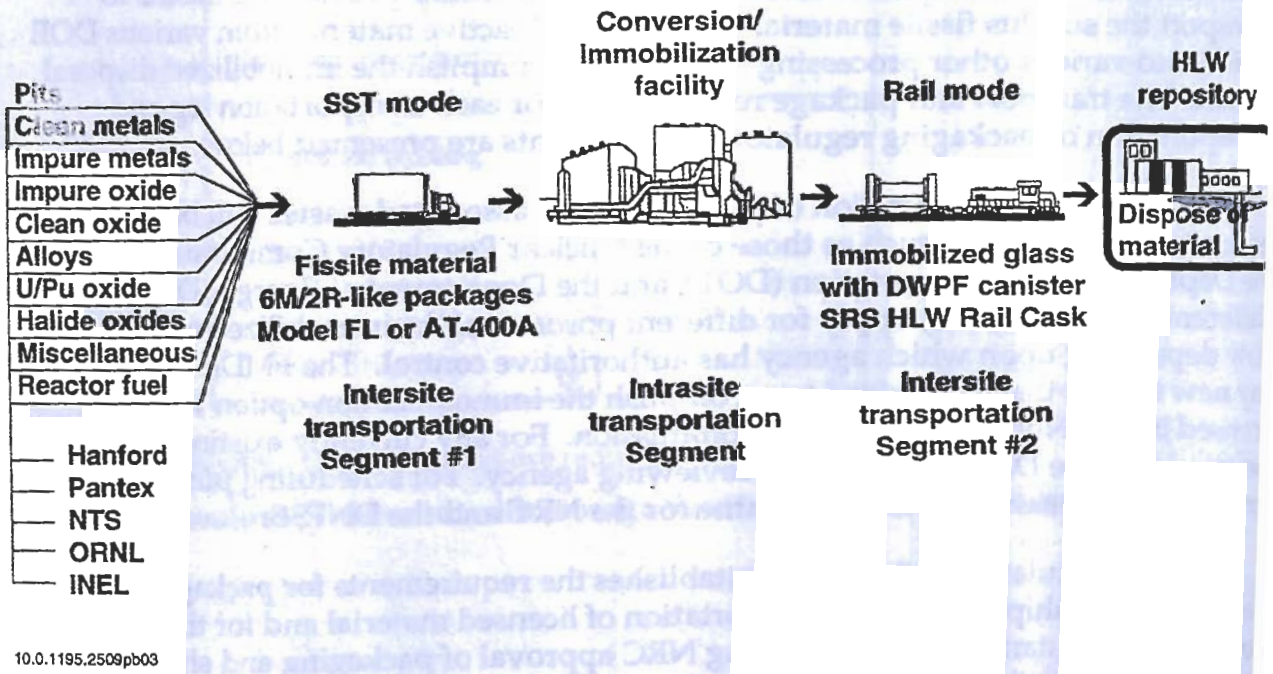

Figure 9. Simplified flow chart showing transportation segments.

Package Description. The pits under the FMDP will be stored and transported in the Model FL or the AT-400A container. Different pits can utilize these containers by using different internal fittings.

The other plutonium material is assumed to be at onsite storage at the various DOE facilities. The material and package is assumed to meet *The Criteria for Safe Storage of Plutonium Metals and Oxides* stated in the DOE standard *DOE-STD-3013-94*, July 1996. This criteria states that all plutonium metal and oxides (excluding pits) over 50 wt% plutonium shall be stored in a storage container that includes a minimum of two nested hermetically sealed containers to serve as barriers to isolate the stored materials from the environment and to prevent contamination release.

For transporting the plutonium material (non-pit), the storage container would be loaded into another shipping container, a 6M/2R-like package which could provide double containment if required. Two 6M/2R-like package designs that could incorporate the storage container are the SAFREG and the Chalfant. These specific designs would require modifications to ensure that the package criteria stated in DOE-STD 3013 are met. Further modifications would be required to ensure: 1) the packaging configuration incorporates the storage container, 2) analysis/testing is performed to show the abnormal and normal accident scenarios, and 3) the Safety Analysis Report is modified to show the changes.

Unirradiated reactor fuel forms to be shipped from the various DOE sites in this segment consist of unirradiated pellets, pins, and fuel assemblies. This material can be shipped either in these forms in an NRC certified package like the model number MO-1 (Certificate number 9069) or as pellets in a 6M/2R-like package. In either case, the material shipments will consist of Category I quantities with the requirement for SST transport. A review of these alternatives shows that shipment as pellets greatly reduces the number of individual shipments required if the MO-1 package is used. Additionally, shipment as pellets in a 6M/2R-like container by SST results in a further reduction of individual shipments.

As a result, the 6M/2R-like package is the preferred option for unirradiated reactor fuel shipment, and no distinction will be made between reactor fuel and other nonpit plutonium material when considering Intersite Transportation Segment #1.

Shipment Information. A 10-year FMDP shipment campaign has been assumed with a total quantity of 50 tonnes (56 tons) The total package and shipment quantities for intersite transportation segment 1 are shown in Table 2. Table 2 summarizes shipment information that was applied to all FMDP variants in order to provide an even comparison among variants. The amount of detail that is provided in Table 2 has been limited due to classification issues.

Intrasite Transportation. Canisters containing the plutonium-glass cans will be transported from 221-F to the DWPF Service Building via rail or truck, under heavy guardforce protection.

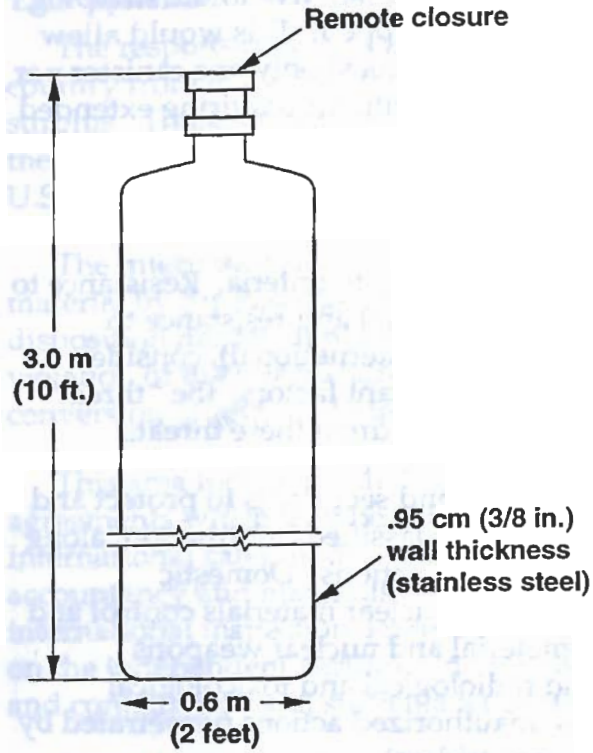

Figure 10. DWPF canister.

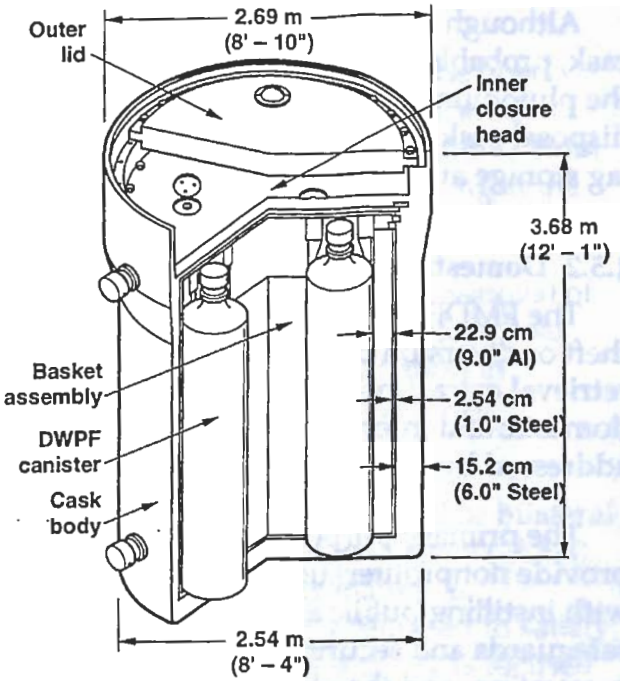

Figure 11. SRS HLW rail cask.

Table 3. Parameters for intersite transportation segment #2.

Data	Contents with plutonium cans and HLW
Packaging	
Type	DWPF canister with SRS HLW rail cask
Certifying agency	not currently certified
Wt Pu/canister	51.2 kg (113 lb)
Plutonium glass material weight/canister	1680 kg (3700 lb)
Canisters/rail cask	5 (maximum)/1 (minimum)
Average Shipping Volumes	
Quantity material/year	5000 kg (11,000 lb)
Shipments/year	20 (minimum)/100 (maximum)
Canisters for life of project	1000 (200 incremental)
Shipping casks over life of project	200 (40 incremental)
Routing	
Mode of transport	Commercial rail or truck

Although the plutonium containing canisters could be shipped five to the shipping cask, probably only one canister per shipping cask will be shipped. This would allow the plutonium canisters to be positioned in the repository drifts at only one canister per disposal cask for ease of criticality control in the repository without requiring extended lag storage at the repository surface facility.

1.5.2 Domestic Safeguards

The FMDP has established two major safeguards and security criteria. Resistance to theft or diversion by unauthorized parties (Criteria 1, domestic) and resistance to retrieval extraction and reuse by the host nation (Criteria 2, international), consider domestic and international perspectives based on two important factors: the "threat" addressed by these criteria, and the "regimes" that exist to address these threats.

The primary purposes of FMDP domestic safeguards and security is to protect and provide nonproliferation assurance of fissile material and classified information, along with instilling public and international confidence in those actions. Domestic safeguards and security is composed of two subsystems, nuclear materials control and accounting, and the physical protection of fissile material and nuclear weapons components against threats of diversion, theft, and radiological and toxicological sabotage. Domestic safeguards primarily address unauthorized actions perpetrated by individuals and/or subnational groups (insiders or outsiders).

The detection and prevention of an unauthorized access or removal attempt (e.g., theft or diversion) depends on the levels of safeguards and physical protection at the facility. In general, safeguards are more easily applied and more readily verified when materials are in the form of discrete, uniquely identifiable items, as opposed to difficult to measure materials in bulk form, as may be found with chemical processing activities. The DOE, and the NRC, have established requirements for domestic safeguards and security. In the U.S., both the DOE and NRC have specific orders or regulations that identify physical protection, and material control and accountancy. There are measures that must be followed, as determined and negotiated based upon the category and attractiveness of the fissile material.

The responsibility of the domestic regime is to prevent unauthorized access to its material either by groups within its own weapons complex, such as disgruntled workers, or by other national or international terrorist groups, criminal organizations, etc.

The domestic threats can be condensed as: *theft* (e.g., unauthorized removal of material by an individual or group outside of the host nation's weapons complex), *diversion* (e.g., unauthorized removal of material by a member of the host nation's own weapons complex), *retrieval* (unauthorized access by outside individuals or groups after final disposition), and *conversion* (the conversion of retrieved material into weapons usable form).

1.5.3 International Safeguards and Nonproliferation

The responsibility of the international safeguards regime is to prevent the host country from diverting, retrieving, or converting material that has been declared surplus. Thus, the context of safeguards and security should be viewed not only from the U.S. DOE perspective, but from the perspective of another country looking at the U.S.

The international threats can be condensed as: *diversion* (unauthorized removal of material by the host nation itself in violation of the international regime before final disposition has taken place), *retrieval* (unauthorized access by the host nation in violation of the international regime after final disposition), and *conversion* (the conversion of retrieved material into weapons usable form).

This area includes FMDP activities that may be affected by international or bilateral agreements which may be subject to the International Atomic Energy Agency (IAEA). International safeguards are composed of two subsystems, nuclear materials accountancy and materials containment and surveillance, which are required to satisfy international inspection agreements. International safeguards and security is focused on the independent verification of material use through material accountancy programs and containment and surveillance systems.

The IAEA has established safeguards criteria for the materials control and accountability and the containment and surveillance of fissile material. The requirements in this area are derived from the IAEA statutes and informational circulars. The IAEA, in concert with member states (most notably the U.S.) has also developed recommendations for states to develop appropriate domestic security measures, but they are recommendations, and not audited requirements. The safeguards criteria and security recommendations are typically based on practices followed in the U.S. and agreed upon by the IAEA member states.

Domestically, the DOE and NRC are the safeguards and security policing agencies, depending upon jurisdiction. However, internationally there is no direct police organization for safeguards and security. Specifically, the IAEA has no jurisdiction or obligation to oversee the measures taken by a state (or host nation) to address unauthorized access to special nuclear material (Criteria 1). In this variant, it is assumed that all facilities except the plutonium processing facility will be subject to IAEA safeguards. Depending upon agreements that would be made, between the U.S. and the IAEA, part of the plutonium processing facility may, or may not, come under IAEA safeguards. The key issue here is the protection of classified information known as Restricted Data (nuclear weapons design information).

1.5.4 Process Description for Disposal of Plutonium Wastes in a HLW Repository

The repository facility for permanent disposal of plutonium waste forms consists of a surface facility (Figure 12) for receipt and handling of wastes, and a subsurface facility (Figure 13) for permanent isolation of the wastes from the accessible environment. The

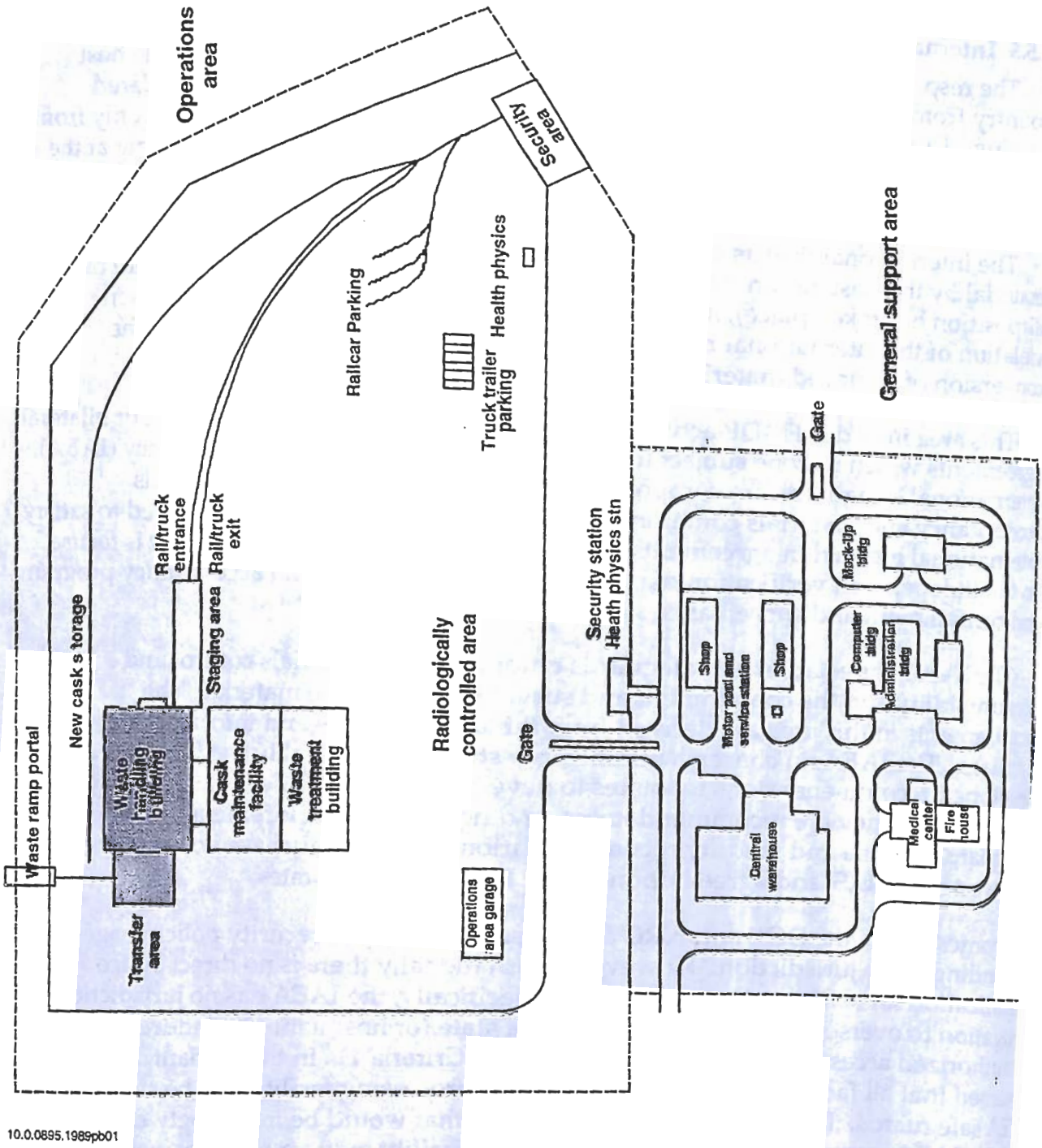

Figure 12. Conceptual plan for repository surface facilities handling plutonium waste forms.

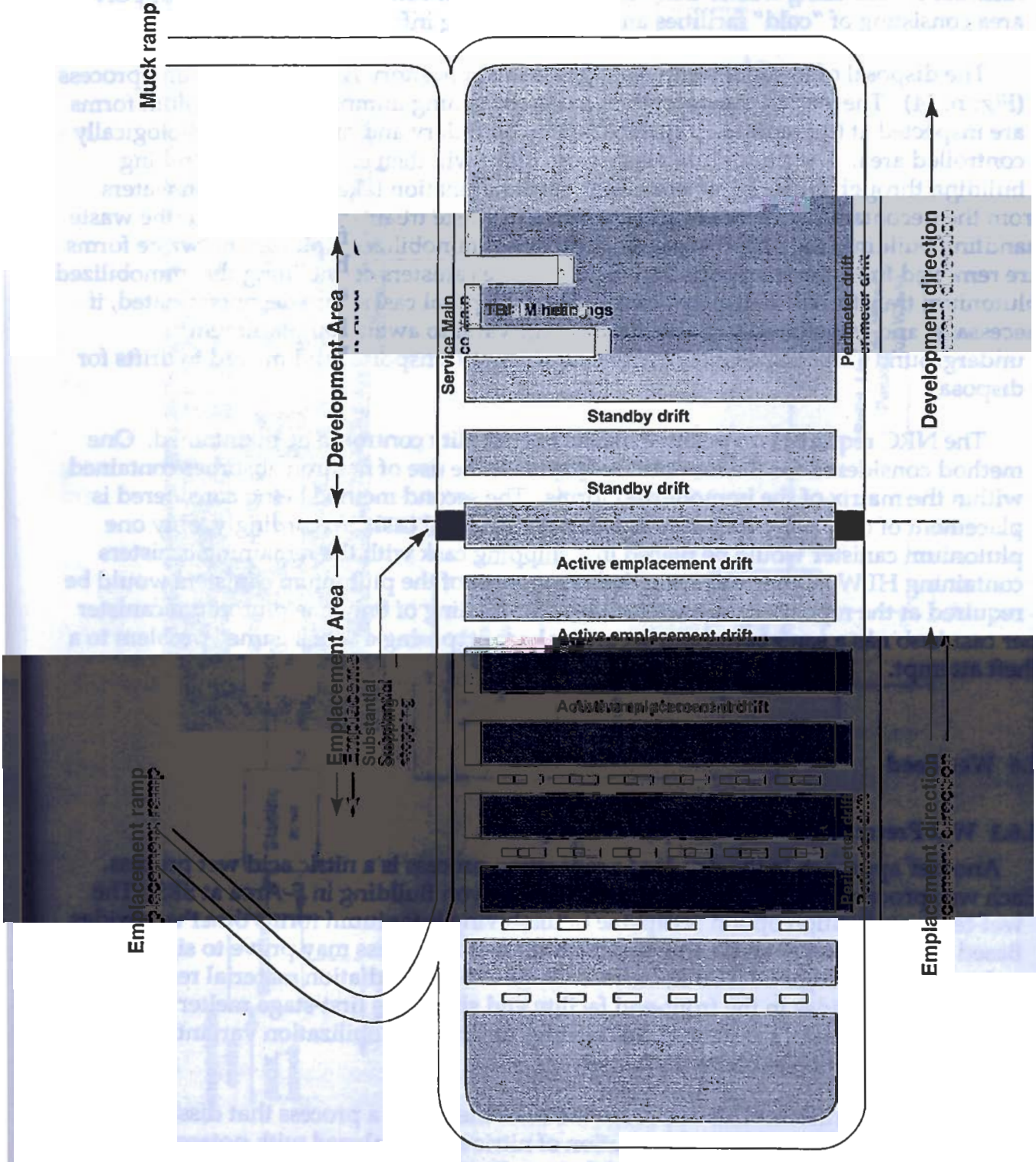

10.0.0895.1989pb01

Figure 13. Conceptual layout for isolation of plutonium waste forms.

surface facility contains two separate areas: an operations area containing all the facilities for handling wastes that require radiological control, and a general support area consisting of "cold" facilities and the supporting infrastructure.

The disposal of immobilized waste forms in a repository is a solids handling process (Figure 14). The loaded transportation casks containing immobilized plutonium forms are inspected at the repository surface facility boundary and moved to a radiologically controlled area. The plutonium waste from casks will then enter a waste handling building through air locks, where minor decontamination takes place. Wash waters from the decontamination operation are sent to a waste treatment facility. In the waste handling building, the sealed canisters containing immobilized plutonium waste forms are removed from the transportation casks and the canisters containing the immobilized plutonium transferred to disposal casks. These disposal casks are decontaminated, if necessary, and transferred to a shielded storage vault to await emplacement underground. The disposal casks are coupled to a transporter and moved to drifts for disposal.

The NRC requires two positive means of criticality control to be maintained. One method considered for the immobilized forms is the use of neutron absorber contained within the matrix of the immobilized forms. The second method being considered is placement of only one plutonium canister per disposal cask. Accordingly, only one plutonium canister would be placed in a shipping cask with the remaining canisters containing HLW. Otherwise extended lag-storage of the plutonium canisters would be required at the repository surface facility. The loading of only one plutonium canister per cask also has a safeguards and security benefit, posing a "shell game" problem to a theft attempt.

1.6 Wet-Feed

1.6.1 Wet Pretreatment Feed Preparation Option

Another approach to the dry-feed preparation process is a nitric acid wet process. Each wet-process step takes place in the 221-F Canyon Building in F-Area at SRS. The wet-feed preparation option is capable of dissolving plutonium forms other than oxid Based upon further analysis and demonstration, this process may prove to significant reduce the amount of DNFSB Recommendation 94-1 remediation material requiring conversion to oxides in the front-end facility and simplifies first-stage melter operatio which could result in substantial cost savings for this immobilization variant. The following subsection explains each step.

GL-01 Dissolution. This approach assumes the use of a process that dissolves plutonium oxide or metal with a solution of nitric acid catalyzed with potassium fluoride (Figure 15) in a 30-L (8 gal) slab-type dissolver. Toward the end of the dissolution cycle, a solution of aluminum nitrate is added to complex fluoride and t minimize corrosion of the downstream stainless-steel equipment. The oxide charge

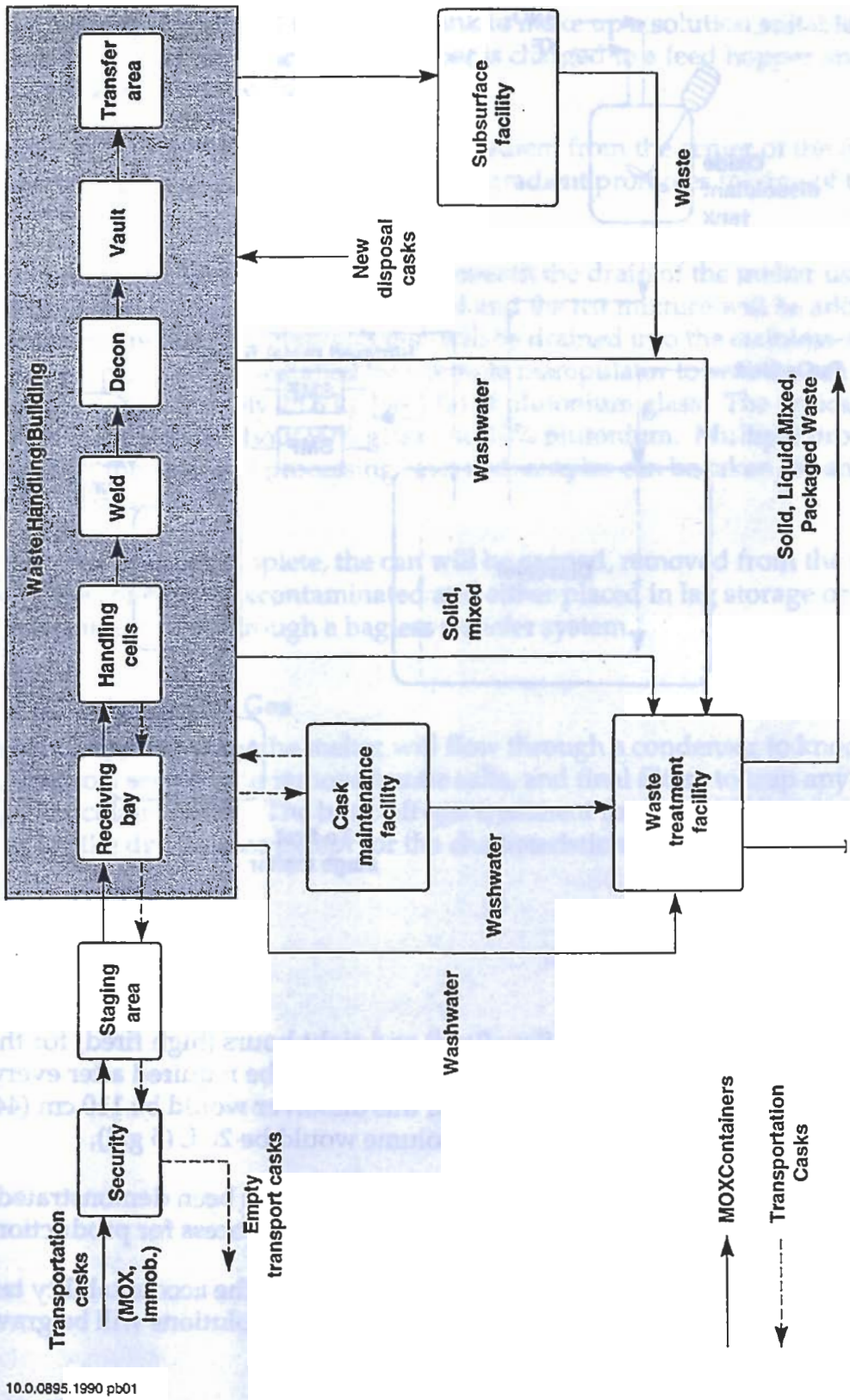

Figure 14. Conceptual process flow diagram for handling plutonium waste forms.

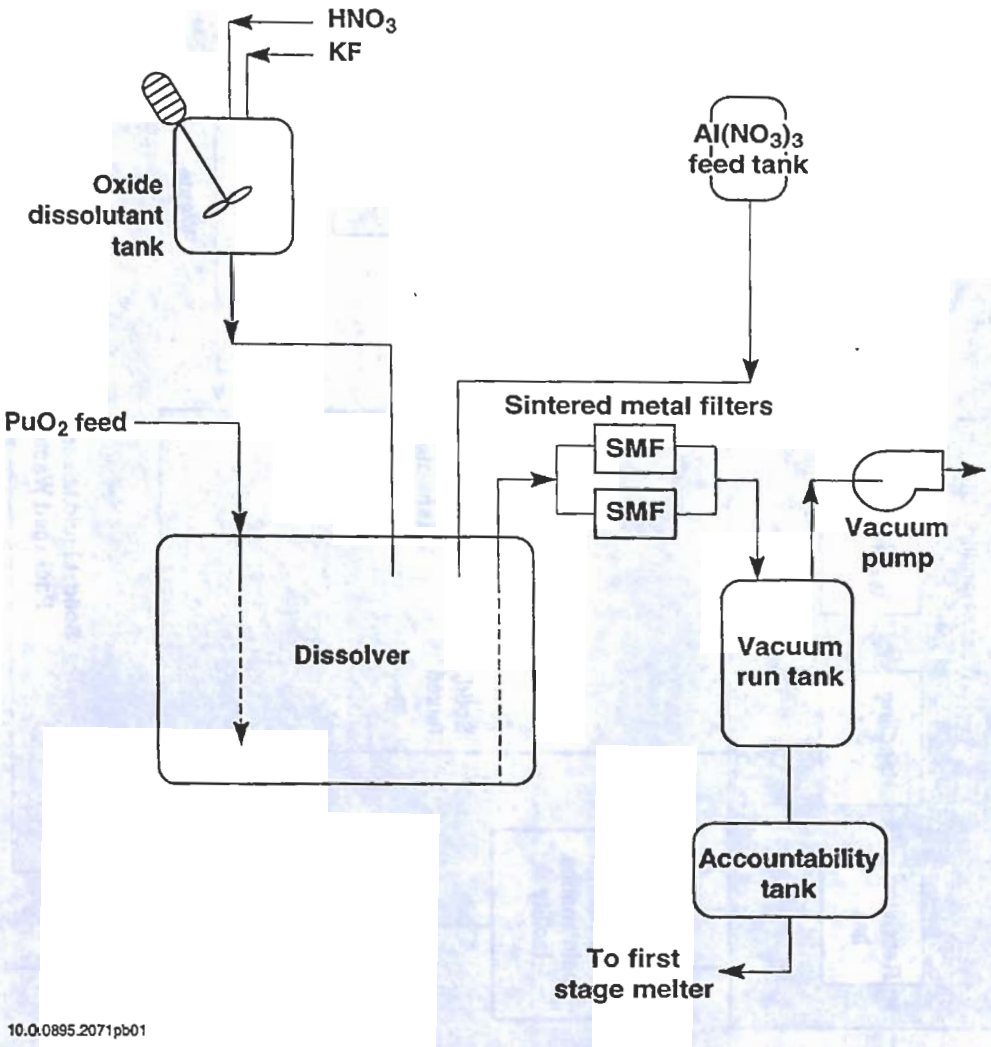

Figure 15. Dissolution flow chart.

require approximately four hours (low fired) and eight hours (high fired) for the dissolution cycle. A cleanout run of the dissolver would be required after every fourth dissolution. The approximate dimensions of this dissolver would be 110 cm (44 in) × 40 cm (16 in) × 9 cm (3.5 in) and the working volume would be 20 L (5 gal).

An improved process to dissolve metal in nitric acid has been demonstrated at the lab scale, but further development is required to use this process for production scale.

The dissolver solutions will be filtered and collected in the accountability tanks. After sampling and analysis, the concentrated plutonium solutions will be gravity fed to the first-stage melter via a jacketed transfer line.

GL-02 Wet First-Stage Melter. Plutonium nitrate at 75.4 g plutonium/L (0.63 lb/gal) is received in a geometrically favorable slab tank through a jacketed line from the dissolver accountability tanks.

Nitric acid and water are fed to the feed tank to make up a solution suitable for the melter. Glass frit containing a neutron absorber is charged to a feed hopper and then both feeds are metered into the melter.

The melter design produces a temperature gradient from the center of the furnace to a cold cap at the top feed area. The temperature gradient promotes mixing of the glass melt.

A new stainless-steel can will be inserted beneath the drain of the melter using a remote manipulator. The melter will be heated and the frit mixture will be added. Once blended and melted, the glass solution will be drained into the stainless-steel can, and a temporary plug will be installed by a remote manipulator to seal the can. Each can will contain approximately 25.6 kg (56.3 lb) of plutonium glass. The typical plutonium glass log will be about 90% glass and 10% plutonium. Multiple process lines will exist to meet the required processing rate, and samples can be taken for analysis in the analytical laboratory.

After the glass pour is complete, the can will be capped, removed from the melter glove box by the conveyor, decontaminated and either placed in lag storage or removed from the pretreatment cell through a bagless transfer system.

1.6.3 Wet Pretreatment Off-Gas

Off-gas and steam leaving the melter will flow through a condenser to knock out moisture, then to a scrubber to remove borate salts, and final filters to trap any remaining particulate matter. The basic off-gas treatment for the wet pretreatment is the same as for the dry process except for the characteristic waste and emissions.

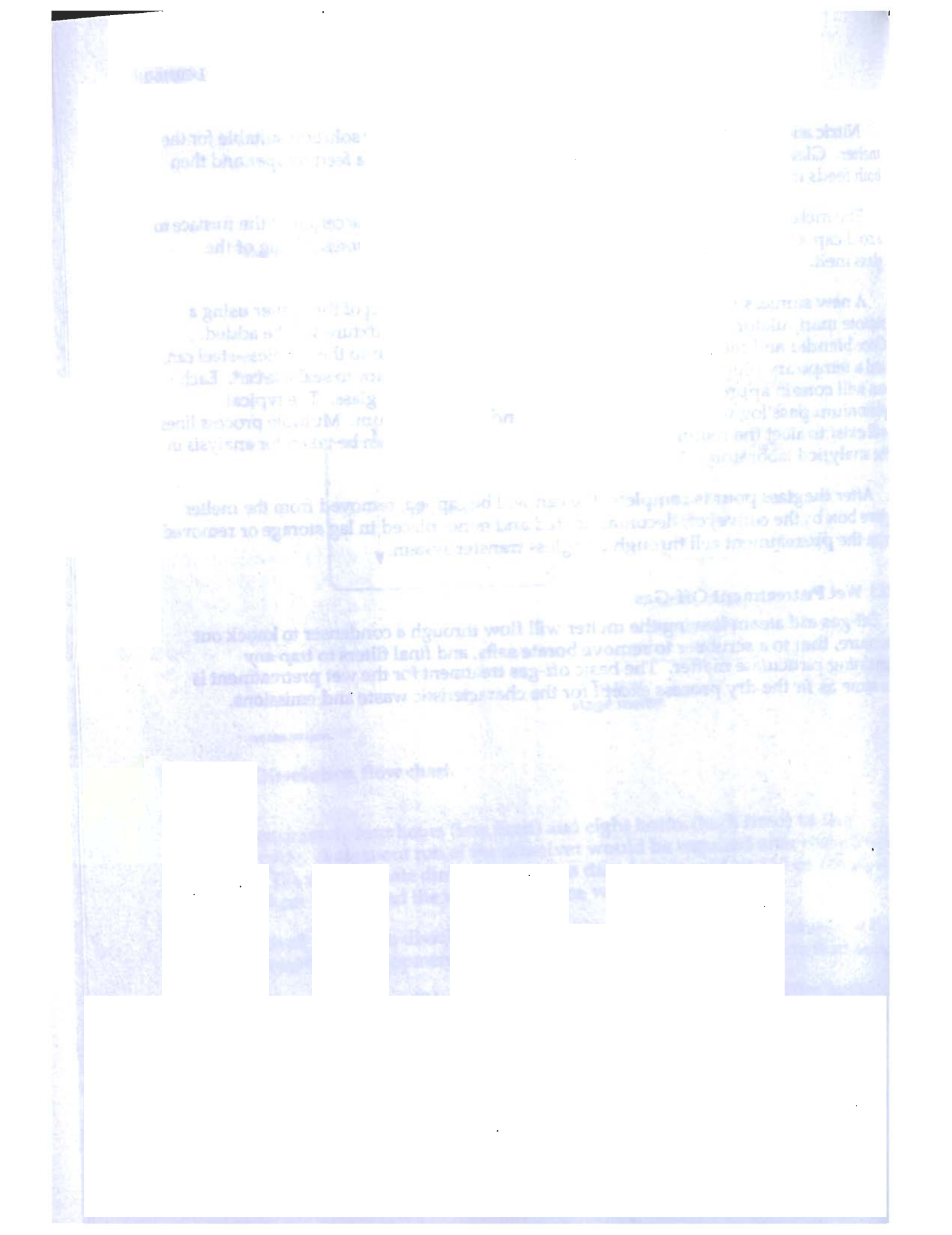

2.0 Criteria Assessment

2.1 Introduction

Section 2 examines technical issues associated with each step of the immobilization process from front-end processing to the final repository. This disposition variant is qualitatively assessed against the following eight criteria:

- Resistance to theft and diversion
- Resistance to retrieval by the Host Nation
- Technical viability
- Environment, safety, and health compliance
- Cost effectiveness
- Timeliness
- Foster's progress with Russia and others
- Public and institutional acceptance

This end-to-end immobilization variant combines functions from facilities previously described in and bounded by the PEIS process currently underway. For front-end processing in this variant, elimination of aqueous recovery lines results in significant reductions in aqueous waste solutions, processing equipment, associated facility space, utilities, and support systems. The use of existing facilities at SRS reduces the environmental impact from construction fro both front-end and back-end processing because new facilities are not needed. The number of additional DWPF canisters required for this case is significantly less than for the greenfield base cases.

2.2 Resistance to Theft and Diversion

2.2.1 Applicable Safeguards and Security Requirements and Measures

Domestic Theft and Diversion (Criteria 1). This criterion evaluates the system protection and resistance to theft by an outsider or an insider and retrieval by outside groups after final disposition. Theft or diversion of material refers to both overt and covert actions to remove material from the facility. This is perpetrated by unauthorized parties including terrorists, subnational groups, criminals, and disgruntled employees.

Protection of the material and information from these parties is a domestic responsibility, not an international one. There are a number of possible adversary groups with different motivations and capabilities. The actions could be overt such as a

ze
t all
many
)

f the

iven by
RC

ce of

s.

els. The D

from the DOE Order for

ded to an attractiveness l
material. Each category
highest level of protection
diated forms and less tha
rial is accomplished throu

endent on the
n has its own

with the highest controls. I, of lesser

Table 4. (DOE) Nuclear material attractiveness and safeguards categories for plutonium.

	Attractiveness level	Pu/U-233 category			
		I	II	III	IV[a]
Weapons Assembled weapons and test devices	A	All quantities	N/A	N/A	N/A
Pure products Pits, major components, buttons, ingots, recastable metal, directly convertible materials	B	≥2 kg (≥4.4 lb)	≥0.4 <2 kg (≥.9 <4.4 lb)	≥0.2 <0.4 kg (≥.4 <.9 lb)	<0.2 kg (<.4 lb)
High-grade material Carbides, oxides, solutions (≥25 g/L) nitrates, etc., fuel, elements and assemblies, alloys and mixtures, UF_4 or UF_6 (≥50% U-235)	C	≥6 kg (≥13 lb)	≥2 <6 kg (≥4.4 <13 lb)	≥0.4 <2 kg (≥.9 <4.4 lb)	<0.4 kg (<.9 lb)
Low-grade material Solutions (1 - 25 g/L), process residues requiring extensive reprocessing, moderately irradiated material, Pu-238 (except waste), UF_4 or UF_6 (≥20% < 50% U-235)	D	N/A	≥16 kg (≥35 lb)	≥3 <16 kg (>6.6 <35 lb)	<3 kg (<6.6 lb)
All other materials Highly irradiated forms, solutions (≥1 g/L), uranium containing < 20% U-235 (any form or quantity)	E	N/A	N/A	N/A	Reportable quantities

[a] The lower limit for category IV is equal to reportable limits in this Order

manned access points. There will be enhanced entrance/exit inspections of personnel, vehicles and hand-carried items. MAA/protected area portals typically have metal detectors, fissile material detectors, and x-ray machines for hand-carried items.

2.2.2 Identification of Diversion, Theft, or Proliferation Risks

Tables 5–7 provide information about the material flow of plutonium through this variant, along with a description of the material and its attractiveness levels.

221-F-Area Facility. The 221-F facility is a safeguards Category I facility. A number of different forms are received by the plutonium processing facility (Category I-B through II-D). This material is converted into oxide (Category I-C through II-D). For this facility most of the material is in a very attractive form with minimal intrinsic barriers. There are a large number of processing steps which provides increased opportunities of covert theft. Since many of the processes involve bulk material the

Yes	
Yes	
N/A	
Yes, to drift emplacement	
No	

ory | Ecb

Emp
repo

equired.

le 6. Sa

Y	Activity	SNM input			ss	n mass/ dimension	
221-F I Proce Immob	Feed processing and immobilization in a glass matrix	metal and oxide		glass in cans		Various	
Intras Transp	Plutonium/glass can to S-Area facility	glass	glass	≤10 wt%	II-D		
S-Are	Plutonium /glass can placed in	glass	glass	≤10% (3%** by wt. in DWPF canisters)	In - II-D Out - IV-E	DWPF canister 1680 kg (3700 lb) 60 cm (cm (10 ft) 1 lb)	
Inte Tra	iters iation	glass	glass	3%**	IV-E	Ca ment 87 ons) 2 3	
Hig Reg						2	
				3%**		Em	

ble 7. Safeguar

cessing and				seg		
ta ort						CHY
Facility DWPF	plac mat					- CHY ot - CRY
ntersite Transport	DW tran	N/				CRY
High Level Was Repository	cells, lag storage					
	Emplacement in repository	TBD	Item	N/A		CRY

* If required.
** The materials can be touched, T, or are in a sealed container, C.
The contai ... can be handled hands-on, H ...
The materi ... ent to be moved, Y, yes, or N, ...

ility measures will involve bulk measureme ... an overt theft
e targets of greatest concern would be the pi ... l oxides which
ansportable. However, these materials wou ... cant protection
... ssociated with an overt event would be acceptable.

vitrified plutonium will be loaded into ... and
VPF canister in the 221-F-Area facility. ... e
surrounding each can w ... nal rack without
first cutting the rebar ca ... the DWPF canister
nent. The top of the canister will then be welded onto the body of the
e weld ... d. At this point the twenty vitrified plutonium cans will be
single ... transport from F-Area
ably si ... t at a time, will be ...
... event would be acceptable.

ng and processing the S-A
facility material will be ch

, de
pro

At DWPF the plutonium cans are surrounded by HLW glass, reducing the attractiveness level. The final product is encased in a stainless-steel canister and contains approximately 51 kg (113 lb) of plutonium, at an average plutonium concentration of 3% when the surrounding HLW glass is included.

Once the immobilized material has been given a self-protecting barrier by the introduction of HLW glass, the safeguards and security requirements are significantly reduced as the safeguards and security Category is now that of IV-E (Highly radioactive material, i.e. a radiation dose rate in excess of 1 Sv (100 rems) per hour at a distance of 1 m (3 ft), is considered as Category IV-E). If after a period of time (approximately 100 years) the self protecting barrier no longer meets the above radiation dose criteria then it may be considered as Category III-D, depending upon the quantity of fissile material present and the additional barriers that may exist at that time (as is true with commercial spent fuel). Protection against radiological sabotage should likewise not be significantly different than for existing commercial spent fuel.

The can-in-canister variant is self-protecting and proliferation resistant with the high level waste glass in the canister which surrounds the plutonium glass cans. However, additional proliferation resistance measures are being investigated to potentially reduce the risk of theft and retrieval of the plutonium glass cans from the filled canisters by unauthorized outsiders such as terrorists and subnational groups. Potential proliferation resistance measures that are being investigated include, but are not limited to, the following:

- The cans could be encased inside a cage of steel reinforcing bars (rebar) and the cans welded to the rebar. Steel plates will be on both the top and bottom of the cans, these plates could also be welded to the cans. The steel rebar cage could then be enclosed using perforated metal. These welds will hold the cans in position within the canister. The welds will keep the cans attached to the rack during an activated explosive charge. The expanded metal will hold a quantity of high level waste loaded glass next to the cans. The cage structure would make the cans even more difficult to remove from the canister.
- A special coating could be developed which could be applied to the exterior of the cans and the perforated metal cage. This special coating would chemically bond to with the high-level waste glass when it contacts the cans and the expanded metal cage. As a result, some high level waste glass would remain surrounding the cans and the expanded metal following an activated explosive charge.

The implementation of such additional proliferation resistance measures must be evaluated against the technical viability and cost of those measures versus the additional proliferation resistance that would be provided. The degree of proliferation resistance would be declared adequate when it becomes more trouble for a terrorist group to separate the cans than it is for them to carry off the canister.

The DWPF plutonium canisters are filled and sealed. No further bulk processing is required. The fissile material is no longer physically accessible and becomes subject to item accountancy, further reducing the opportunities for covert theft.

There is some concern with the capability to perform accurate accountancy measurements after this processing occurs, especially after the addition of the radiation spike. However, it is reasonable to assume that containment and surveillance, coupled with accurate measurements prior to spiking, and item accounting thereafter, will be as acceptable in this facility as it is in others (i.e., spent reactor fuel). Research and development should be conducted, however, to assure that the best technically viable methods can be used to satisfy the public and the international community that this concern, for weapons program materials, has been adequately addressed.

The canisters would be loaded into a SRS HLW rail cask for transport to the repository. The primary threat here is that a terrorist group could blow the lid off the shipping cask, drop a lifting ring around a DWPF canister and lift it from the shipping cask using a helicopter. Potential proliferation resistance measures that are being investigated include, but are not limited to, the following:

- A perforated expanded metal collar that tops the canisters would prevent easy extraction of any one canister from the shipping cask.
- Approximately 1200 cask shipments, containing 5 canisters each are required to transport the DWPF HLW glass canisters to the repository. A minimum of 200 and a maximum of 1000 shipments would be necessary to transport the vitrified-plutonium canisters. A terrorist group would therefore have to have insider knowledge to determine which of the shipments contained one or more plutonium containing canisters. As the shipping cask could contain from zero to five plutonium containing canisters, the group would also have to have insider knowledge as to which canister contained plutonium if only one canister was to be hijacked. If only one plutonium canister was placed into a shipping cast, as probably will be required to maintain criticality control in the repository, then the terrorist group would have a 5 in 6 chance of hitting a shipment containing a plutonium canister, but only a 1 in 5 chance of selecting the correct canister if the shipping cask contained a plutonium containing canister.

The implementation of such additional proliferation resistance measures must be evaluated against the technical viability and cost of those measures versus the additional proliferation resistance that would be provided.

Repository. The canisters are received in SRS HLW rail casks. In the surface staging area the canisters are removed from the transport casks and placed into disposal casks. The disposal casks are moved to the subsurface facility and the casks are placed into the tunnel drifts. The casks enter the drifts through sealed doors that are opened to allow cask emplacement. Each drift is secured after it is "filled" with casks. The material is highly radioactive and each cask weighs approximately 22 tonnes (24 tons). The material is a low attractiveness target for both covert and overt theft.

Risk Assessment. The measures identified for this criteria are the *environmental conditions, material form, and safeguards and security assurance*. These measures are briefly described below and a qualitative discussion of the relative risks is presented for each of the facilities in this variant. Table 8 summarizes the potential risks. This assessment is highly qualitative and based on available data.

Environmental Conditions—The logistics, physical location, and the state during processing, transportation, or storage affect the opportunities for theft. The more complex the logistics (e.g., transfers and process locations), the more opportunities there are for theft. The more inaccessible the physical location (e.g., storage locations), the fewer opportunities for theft. Table 5 summarizes the safeguards and security environmental data.

221-F-Area Facility. The processing area in 221-F involves a large number of processing steps with a relatively high throughput. Based on the quantity and attractiveness of the material this will be a Category I facility. Waste streams containing fissile material will be generated and thus require monitoring to prevent possible theft or use as a diversion path. There will be lag storage in a vault. Although operations for a single batch are relatively short there will a large number of batches needed to meet the proposed throughput obligations, and therefore the opportunities for possible adversary actions are numerous. Safe secure trailer/transports will be used to deliver the material to 221-F.

Waste streams containing fissile material will be generated during processing activities. There will be intrasite transport movements until the large DWFP canisters are moved to the DWPF building.

Table 8. Relative potential risks for threats and criteria 1 & 2.

	Plutonium processing (Bldg 221-F)	Intrasite transit	DWPF HLW glass pour (S-Area Facility)	Intersite transit	High level waste repository	After repository emplacement
Threat						
Covert threat	High	Medium	Medium/Low	Low	Low	Low
Overt threat	Medium	Medium	Medium/Low	Low	Low	Low
Diversion	High	Medium	Medium/Low	Low	Low	Low
Criteria 1						
Material form	High	Medium	Medium/Low	Low	Low	Low
Environment	Medium Low	Medium	Medium	Low	Low	Low
Safeguards and security	High	Medium	High Medium	Low	Low	Low
Criteria 2						
Detection	High	Medium	Medium/Low	Low	Low	Low
Irreversibility	High	Medium	Medium/Low	Low	Low	Low

S-Area Facility. The initial handling of the plutonium-glass cans in S-Area will be in the Category 1 Interim Canister Storage Vault (GL-26) until the cans in the DWPF canister enter the self-protecting DWPF melter cell. No waste streams containing fissile material will be generated in the DWPF.

Once the material has been immobilized, it will be stored in a separate location (Category IV-E) and the only transport will involve moving the canisters from the storage area to the HLW Repository. No fissile material waste streams are generated in storage.

Repository. In the surface staging area the canisters are removed from the transport casks and placed into disposal casks. The disposal casks at some later time are moved to the subsurface facility and the casks are placed into the tunnel drifts. The casks enter the drifts through sealed doors that are opened to allow cask emplacement. The sealed doors are what secures the drift and waste packages; final "securing" will not occur until the end of the performance period (currently expected to be a 100 years from start of emplacement).

Material Form. Attractiveness is based on physical, chemical, or nuclear (isotopic and radiological) makeup of the nuclear material during processing, transportation, or storage. The risk of theft for weapon use is reduced if the material is only available in small quantities, the physical and chemical form of the material or matrix makes recovery difficult, or the material has an unattractive isotopic content. Table 6 summarizes safeguards and security material form data.

221-F-Area Facility. The material received at the plutonium processing facility is the most attractive material for this variant (e.g., pits, pure metal and oxide) and can be up to Category I-B. The material has overall very low intrinsic barriers, and is transportable. It has a very low radiological barrier. It is in most cases in a very pure form, as a metal or oxide, and its isotopic composition makes it very usable for a nuclear device. Because pits and some other weapons usable materials are being processed, some of the material and waste streams will be classified.

Once the material has been blended and vitrified in the front-end vitrification step, it is more difficult to convert to a weapons usable form. Additionally, the concentration of the plutonium is lower, substantially greater amounts of material would be required to produce a significant quantity. The safeguards category and attractiveness is determined as II-D at this point. Once the material is placed into canisters its chemical, isotopic and radiological attributes would not change but its target mass and dimensions would increase (e.g., canisters) thus making it more difficult to move and easier to maintain surveillance, control, and accountancy.

S-Area Facility. The feed material is comprised of very attractive material (I-C) within small, but sealed cans. With the addition of highly radioactive barrier material the plutonium is safeguard categorized as IV-E.

Repository. The canisters containing cans of plutonium-glass and spiked with HLW delivered to the repository are highly radioactive and so intrinsic barriers are quite high. The radiological and isotopic attributes are time dependent and eventually the material would no longer be self-protecting because the radiological barrier would decrease by an order of magnitude in 90 to 100 years.

Safeguards and Security Assurance—The effectiveness of safeguards and security protection depends on the physical protection and material control and accountability characteristics of the processes and facilities involved in the storage and disposition activities. Safeguards and security assurance data is summarized in Table 7.

221-F-Area Facility. Material received into this facility (e.g., pits and containers with tamper indicating devices) would utilize item accountancy. Once the material has been removed from the "container" then bulk accountancy would be necessary. In addition to destructive assay other nondestructive assay (NDA) may be performed. As mentioned previously the pits and some other material will be classified. This may also apply to waste streams. After the material is converted to a glass log and sealed in a stainless steel can, accountancy would revert to item count.

S-Area Facility. During all processing operations item accountancy would be conducted. Once the material is placed inside the canisters it is no longer accessible, and requires special remote handling equipment to be moved.

Item accountancy is used to account for canisters. Markings and seals on the canisters can also be used to verify material. Special handling equipment is required to move these canisters and once they have a radiation barrier remote handling is necessary. For immobilized-spiked material, some nondestructive assay measurements are possible but they are generally used to confirm the presence of the radiation barrier and not to accurately account for the plutonium. Using the initial material information and the accountancy records from the facility processes, the quantity of material can be estimated.

Repository. Item accountability is used for the casks. No access is available to the material itself although access to the casks is possible. All movements of the casks requires special handling equipment.

2.2.3 Ability to Achieve the Spent Fuel Standard

The "spent fuel standard" means that the material is as inherently unattractive and inaccessible as plutonium in commercial spent fuel. The final disposition form, environment, and safeguards and security for this variant meet the spent fuel standard. Both significant extrinsic (facility) and intrinsic (related to the material form) barriers exist. Since the radiological barrier is time dependent this barrier will over a long period of time decrease and the material will not necessarily be self-protecting. Prior to the addition of the radiation spike the material does not meet the spent fuel standard and therefore protection commensurate with its attractiveness level must be provided.

2.2.4 Safeguards and Security Transportation Related Issues

For intersite Category I material safe secure trailer/transports will be used to move the material between sites. A secure unloading area must be available to receive, verify and store the Category I material. With respect to other transport activities (e.g., between processing and storage), there are inherently fewer safeguards and security risks for overt theft scenarios and a much lower risk for covert theft attempts. Minimizing the number and/or duration of the transport steps is desirable.

2.3 Resistance to Diversion, Retrieval, Extraction, and Reuse by Host Nation

2.3.1 Applicable Safeguards and Security Requirements and Measures

International Diversion, Retrieval, Extraction, and Reuse (Criteria 2). This criteria evaluates the system's resistance to diversion of material before final disposition by the weapons-owning state, retrieval of material after final disposition by the weapons-owning state, and the weapons-owning state covertly converting the material back into weapons-usable form. The material form, environment and safeguards are particularly important for detecting the diversion, retrieval and extraction activities. Additionally, the irreversibility of the material form is important for assessing its reuse in nuclear weapons. Nuclear material for this variant falls under the International Atomic Energy Agency (IAEA) categories of unirradiated direct use. Some of the other fissile material in the FMDP are not considered by the IAEA. The only existing worldwide inspection regime that exists to address this threat is the IAEA. One mission of the IAEA is timely detection of the diversion of nuclear material from declared nuclear activities. An important measure used by the IAEA is the "significant quantity" which is 8 kg (18 lb) for plutonium. Since the state owns and operates the physical protection and material control and accountancy measures, the IAEA does not rely on these systems to fulfill their obligations. However, IAEA does independent verification of the data from the state's system of material control and accountancy. The IAEA, in performing its safeguards inspection activities, audits the facility records and makes independent measurements of selected samples of each kind of nuclear material in the facility. To help them fulfill their responsibilities, this verification is coupled with a technology known as "Containment and Surveillance" which is designed to provide "continuity of knowledge" during inspector absence. Much of the containment and surveillance equipment used by the IAEA is very similar in technology, and in some cases nearly identical, to the seals and surveillance equipment used by national authorities in physical protection functions. Although the technologies may be the same, the objectives are different. For example, domestic requirements are usually monitored in real, or near-real, time. However, the IAEA may use unattended monitors (closed-circuit television recording, etc.) and return to a site only once every 3 months to check and verify activities.

The philosophies and implementation of international safeguards (commonly referred to as IAEA safeguards) are substantially different from domestic safeguards and security (as DOE and NRC practice). It is likely that these activities will require

additional accountability verification (e.g., identification, weighing, sampling and analysis and nondestructive assay), increased inventories and item checks, containment/surveillance measures installed throughout the facilities (e.g., surveillance, seals, monitors, tags), and space for inspectors and equipment for independent measurements by international inspectors. Additionally, classified and other sensitive information may need be protected differently what might currently be implemented, because of the presence of IAEA uncleared foreign national inspectors. Under current laws certain information cannot be divulged to IAEA inspectors (e.g., disclosure of weapons design information violates the Atomic Energy Act and the 1978 Nuclear Nonproliferation Act). Therefore at least part of these facilities may not be under international safeguards and therefore verification by the IAEA is not possible, until agreements between the IAEA and the U.S. can be accomplished. A number of different options are being considered which address this problem.

2.3.2 Possible Diversion, Reuse and Retrieval Risks

The threat for this criteria is the host nation. Although the host nation may choose to use overt measures to obtain material, the greatest concern is with covert diversion and retrieval. Because the State has responsibility for physical protection and materials control and accountability, the IAEA will seek to independently verify material accounting.

Containment and surveillance are used to complement the material accountability measures. The vulnerability to diversion is dependent on the material form and the ability to retrieve and convert the material into a weapons usable form. Therefore, if we were to evaluate each of the facilities for this variant there may be some differences. Because of inherent limitations on the accuracy of non-destructive assay measurements there is an increased risk of diversion at high throughput facilities. This is where containment and surveillance plays an important role in assuring material accountability. For each of the facilities in this variant a brief discussion is presented below of some of the potential risks to diversion. Existing domestic protective measures will help mitigate these risks, as a covert attempt to divert a significant quantity will require multiple accomplices and greater amounts of materials control and accountability steps to be subverted in order to avoid detection.

221-F-Area Facility. The material received at the plutonium processing facility is the most attractive material for this variant (e.g., pits, pure metal and oxide). In the case of pit conversion, the attractiveness goes from I-B to II-D. The material has overall very low intrinsic barriers, and is transportable. It is in most cases in a very pure form, as a metal or oxide, and its isotopic composition makes it very usable for a nuclear device. Because pits and some other weapons usable materials are being processed, some of the material and waste streams will be classified.

S-Area Facility. The primary initial feed material is comprised of relatively attractive material (II-D). Once the material is placed into canisters its chemical, isotopic and radiological attributes would not change. However, in S-Area, target mass/dimensions would increase. Because of the presence of highly radioactive fission products,

chemical processing to convert into a weapons usable form is much more difficult, making it a Category IV-E material.

Repository. The high intrinsic barriers of the canisters and large mass of the casks make diversion more difficult. Since the radiological barrier is time dependent it is necessary that other measures be utilized to help minimize the threat of diversion. Placement of the material in an underground repository makes retrieval of this material extremely difficult. Additional safeguards and security and containment and surveillance measures should be utilized to help safeguard this material, particularly for long time periods. It is also important that high accountability of the material be maintained so that there is the highest level of confidence that the material was not diverted and was in fact placed into the repository.

Again the measures of the environment, material form, and safeguards and security contribute to this criteria. Thus the information found in the provided tables are applicable, however the capabilities of the adversary (e.g., the host nation) must be considered when analyzing this information. The primary measures are the irreversibility of the material forms (e.g., the ability to convert the material into weapons usable form) and the ability to detect diversion, retrieval and conversion.

Difficulty of Diversion, Retrieval, Extraction, and Reuse. This establishes the timeliness and irreversibility criteria and the level of safeguards required.

221-F-Area Facility. The material received at the plutonium processing facility is the most attractive material for this variant (e.g., pits, pure metal, and oxide). In the case of pit conversion the attractiveness goes from I-B to II-D. The material has overall very low intrinsic barriers, and is transportable. It is in most cases in a very pure form, as a metal or oxide, and its isotopic composition makes it very usable for a nuclear device. Because pits and some other weapons usable materials are being processed, some of the material and waste streams will be classified.

S-Area Facility. The primary initial feed material is comprised of relatively attractive material (II-D). The intrinsic attributes of this material are the same as described above. Once the material is placed into canisters its chemical, isotopic and radiological attributes would not change. However, target mass and dimensions would increase, and because of the presence of highly radioactive fission products, chemical processing to convert into a weapons usable form is much more difficult, making it a Category IV-E material. Once the material has been given the radiological barrier, handling the material becomes more difficult. Thus, the risk of diversion and reuse are lower (spent fuel standard).

Repository. The high radiological barrier coupled with storage of the material in massive waste packages in a deep repository makes diversion very difficult, expensive, and easily detected by containment and surveillance measures. Even if the material could be diverted a considerable effort would be required to convert this material into a weapons usable form.

Assurance of Detection of Retrieval & Extraction—the difficulty of detection or diversion of a significant quantity of material. This depends on the following factors:

- Ability to measure material which includes processing that is underway, accuracy of applicable nondestructive analysis techniques, the presence of waste streams, and classification issues which may prohibit measurement, and whether item accountancy instead of bulk accountancy methods can be applied.
- Containment and surveillance systems
- Timeliness of detection.

221-F-Area Facility. The material received at the plutonium processing facility is the most attractive material for this variant (e.g., pits, pure metal and oxide). In the case of pit conversion the attractiveness goes from I-B to II-D. The material has overall very low intrinsic barriers, and is transportable. It is in most cases in a very pure form, as a metal or oxide, and its isotopic composition makes it very usable for a nuclear device. Because pits and some other weapons usable materials are being processed, some of the material and waste streams will be classified.

S-Area Facility. The feed material is comprised of relatively attractive material (II-D). The intrinsic attributes of this material are the same as described above. Once the material is placed into canisters its chemical, isotopic and radiological attributes would not change. However, target mass/dimensions would increase and because of the presence of highly radioactive fission products chemical processing to convert into a weapons usable form is much more difficult, making it a category IV-E material. After the material has a radiation barrier, it will require special and remote handling equipment and will reduce the risk of diversion and increase the probability of detection.

Repository. The waste packages will be sealed, item accountancy performed and containment and surveillance measures implemented. Because the size and mass of these casks is quite large, the risk to diversion is lowered. The emplacement of this material in a HLW-repository, along with continuing containment and surveillance measures, will ensure the risk after disposition remains acceptable.

2.4 Technical Viability

2.4.1 Technical Viability of Front-End Plutonium Processing—Disassembly and Conversion

The front-end disassembly and conversion consists of several different processes to convert plutonium storage forms to those needed by the immobilization vitrification operations.

Most of the processes used in the front end are on the industrialization scale. The remaining technologies are in the engineering-scale testing or transitioning into the industrialization stage.

DC-01 Truck and CRT Handling and DC-02 Offsite Receiving/Shipping. The operations in this area involve material handling techniques which have been utilized throughout the DOE complex for many years. Initial accountability confirmation analyses utilize nondestructive analysis technology that has been routinely used for production operation. Storage of shipping containers in a facility with an automated stacker-retriever system has been demonstrated at several sites. Accurate accountability measurements will utilize standard nondestructive methods such as calorimetry and segmental gamma scanning.

DC-03 Gas Sampling. The internal gas pits will be sampled utilizing a laser system similar to one utilized in production operations at the Pantex site. Improvements in the system are currently under development at the Los Alamos National Laboratory.

DC-04 Special Recovery. The processes for handling contaminated pits have been demonstrated on a production scale at the Los Alamos National Laboratory.

DC-05 Pit Bisectioning. Disassembly of pits has been performed on a production-scale at the Rocky Flats plant using modified lathe technology. Improved techniques and equipment which cut the pits without the formation of chips and turnings are under development at the Lawrence Livermore National Laboratory.

DC-06 Hydride/Dehydride/Oxidation. The hydride/dehydride/oxidation process has been demonstrated by unit operation on both a full-scale and engineering test-scale at LLNL. Hemishells for returned weapons pits have been processed through the separate steps sufficiently to demonstrate operational and design data; however, combined operation in a single production unit is still required. Vitrification experiments with oxides produced by hydride/dehydride/ oxidation from a weapons pit are in process at Lawrence Livermore National Laboratory.

DC-07 Calcination and Passivation Furnace. The calcination and passivation furnace is basically a muffle-type furnace which is commercially available. Plutonium-bearing materials (e.g., glove box floor sweepings) have been oxidized in this type furnace for many years throughout the DOE complex.

DC-08 HEU Decontamination. HEU parts have been decontaminated by nitric acid washing at Rocky Flats on a production-scale for several years. Los Alamos National Laboratory is developing an electrolytic process which is expected to significantly reduce the generation of liquid waste. Feasibility of the process has been demonstrated on a laboratory-scale, but requires demonstration on a production scale.

DC-09 Fuel Decladding. These operations are currently used in industrial-scale processes.

DC-10 Size Reduction. Size reduction of plutonium oxide utilizes vibratory grinding which is a standard operation in commercial industry. Plutonium grinding has been performed on production-scale in the manufacture of mixed oxide fuel (plutonium/uranium oxide fuel).

DC-11 in Process Storage. This interim lag storage of oxide will be similar to the vault-storage techniques used in DOE complex facilities for many years.

2.4.2 Technical Viability of Front-End and Back-End Vitrification

After over three decades of research and development, glass has become the material of choice of every major country currently involved with immobilizing processed high-level radioactive waste and has been determined by the EPA to be the best demonstrated available technology for HLW immobilization. There are many features that contribute to the acceptability of immobilizing HLW as borosilicate waste glass forms. Vitrification of HLW in borosilicate glass is an existing, demonstrated technology. Vitrification plants are currently operational in France, the U.K., Japan, and the U.S.

The same properties that make incorporation of HLW into borosilicate glass an option for the disposition of radioactive waste can apply to the incorporation of plutonium into the vitrification process. For plutonium glass additional work will be required to determine the glass formulation, plutonium solubility, plutonium dissolution kinetics, optimum neutron absorber, the solubility interactions of the neutron absorber and plutonium, and melter design for criticality control. Some technical issues have been addressed in various studies, to various degrees of completeness. Research and development activities are required to prove the process to be viable and cost effective. The form of the final product will determine the extent of technical issues such as long term criticality safety and stability of the product after permanent disposition.

GL-01 Dry-Feed Preparation. Dry-feed processing includes the receipt of plutonium oxide containing cans and the feeding of oxide powder and glass frit to the melter. The feed of dry calcine and glass forms is an established operation in the French HLW vitrification program.

GL-02 First-Stage Melter. The plutonium oxide powder and frit will be fed to the melter in two separate streams intended to provide a predetermined glass composition. The key areas requiring further development and demonstration are: plutonium oxide (high and low fired) solubility in glass, uniform mixing in the melter, and production reliable operation of the melter at the required glass physical properties. Crucible melts with plutonium nitrate feeds have successfully dissolved plutonium in lanthanide glasses and full-scale demonstrations of a melter similar to the type expected to be used for plutonium glass is in progress at SRS for another actinide vitrification program to immobilize americium and curium. Leach performance of plutonium-glass compositions and glass compositions using cerium as a plutonium surrogate have been measured to be more than 100 times better than the HLW glass leach standard.

GL-04 Interim Can Storage and Surveillance. This operation will use techniques and technology that have been utilized in canyon operations at Hanford and SRS for over 45 years. Any new remote operations scheduled for the canyons are mocked-up and demonstrated in the clean (nonradiation) 221-F mock-up facilities prior to implementing the operations in the actual, contaminated canyons.

GL-09 Pretreatment Can Decontamination. This operation includes installing a plug cap and decontamination by CO_2 pellet blasting. These process steps are common industrial practices.

GL-10 Pretreatment Weld Test Glove box. This operation is a standard resistance weld of the stainless steel cap to the stainless steel plutonium glass can in a glove box. All of this operation uses standard industrial welding practices.

GL-16 Off-Gas Treatment. These process steps use standard off-gas treatment equipment (condensers, quenchers, scrubbers, HEME, and HEPA filtration) all of which is in industrial use and has been used in the DWPF and European vitrification plants.

GL-25 Canister Filling. Canister filling is an existing DWPF process which has been demonstrated through qualification tests and initial operations to date. The canisters containing the small plutonium glass cans are designed to be substantially transparent to the existing DWPF canister filling and handling. The filling of canisters containing small cans of surrogate plutonium glass was demonstrated in DWPF prior to the start of radioactive operations.

GL-26 Interim Canister Storage. Interim canister storage is the modification of the DWPF Canyon Building to provide vault storage of DWPF canisters containing plutonium glass cans. Construction and operation of vault storage of Category I material is a routine operation in the DOE complex.

Other DWPF Operations. GL-14 blend tank, GL-17 off-gas treatment, GL-15 canister decontamination, GL-08 weld and test are not expected to be affected by the can-in-canister option.

2.4.3 Technical Viability—Repository (Vitrification Can-in-Canister)

Regulatory Risk. Any waste form accepted for disposal in a HLW repository must comply with the provisions of the Nuclear Waste Policy Act, as amended (NWPA). According to Section 2(12)A of the NWPA, the definition of high-level waste does not explicitly include a glass form loaded with plutonium. However, under Section 2(12)B of the NWPA, the NRC has the authority to classify this waste form as high-level waste through rulemaking. Such rulemaking or clarification in the authorizing legislation will be necessary before this waste form can be considered for disposal in an NWPA repository. The final disposal of this waste form will have to follow the licensing provisions of 10 CFR Part 60 and the applicable NEPA process. Further, it is current policy of the DOE not to accept any wastes that include components regulated as

hazardous under RCRA in the first HLW repository; absence of such RCRA regulated materials will have to be demonstrated prior to acceptance into the repository.

Technical Risk. The primary technical viability and risk issue related to the disposal of immobilized glass waste forms in a repository is associated with long-term performance. This is necessary to satisfy the licensing requirements of 10 CFR 60. The long-term performance issues are comprised of doses to a population in the accessible environment, and precluding criticality (as fabricated, degraded mode, and external) during all phases of the repository operation, including the period of isolation.

The contributions to dose by the glass waste form appears to be small compared to that predicted from uranium-based commercial spent fuel. However, the cumulative doses, from both the commercial spent fuel and the glass must be shown to be within the envelope permitted by regulation. Since the EPA has remanded the regulation governing long-term performance and since a repository has not yet been licensed, calculations of such cumulative affects are not currently possible.

The NRC regulations for criticality control require that "the calculated effective multiplication factor (k_{eff}) must be sufficiently below unity to show at least a 5% margin, after allowance for the bias in the method of calculation and the uncertainty in the experiments used to validate the method of calculation." [10 CFR Part 60.131 (b)(7)]. Preliminary calculations on as-fabricated criticality for the glass option, with a 1:1 molar ratio of plutonium to neutron absorber, shows that the k_{eff} of 0.95 or less as prescribed by NRC can be met. The effects of waste form and waste package degradation and the potential loss of neutron absorbers on criticality control are currently uncertain. An experimental program and further analyses are underway to assess these risks.

Although the NRC allows only limited credit for neutron absorbers for the commercial SNF, in recent communications with DOE, the NRC has postulated the potential use of low-solubility neutron absorbers for weapons plutonium for criticality control. This suggestion has been made as part of the early development efforts that DOE should undertake in establishing a strong rationale for criticality control, especially where excess weapons-usable fissile materials are being disposed in a repository. The experimental program and additional analyses are completely consistent with these suggestions.

2.5 ES&H Summary (Deltas/Improvements Over PEIS)

The PEIS analysis currently underway is based on individual data calls for separate pit disassembly and conversion, conversion and stabilization, and immobilization facilities.

This end-to-end immobilization variant combines functions from these previously described facilities. The PEIS impact analysis is considered bounding for this variant;

however facility consolidation and process simplifications and improvements result in substantial ES&H improvements over the bounding case being analyzed in the PEIS. These improvements are discussed below.

2.5.1 Front-End Plutonium Processing—Disassembly and Conversion

The front-end disassembly and conversion for immobilization presented in this report offer substantial ES&H improvements over the base case being analyzed in the PEIS.

The pit disassembly and conversion and plutonium conversion and stabilization new facilities and process flow diagrams being analyzed in the PEIS is the base case and produces clean metal or >50% oxide to meet the long-term storage standard. This requires residue processing lines that generate aqueous waste solutions.

For this variant, all of the front-end processes will take place in the modified existing 221-F facility at SRS. No new facilities are to be constructed for the front-end which results in significant reductions from the base case environmental impacts for construction.

The front-end flow diagram for immobilization has been tailored and simplified to meet the immobilization process requirements. Aqueous recovery lines and process steps to purify oxide have been eliminated since impure oxide is satisfactory feed for the immobilization process. The process to separate plutonium from uranium solutions has been eliminated and the plutonium contaminated uranium is fed directly to the immobilization process.

These changes result in significant reductions in aqueous waste solutions, processing equipment, associated facility space, utilities, and support systems. Personnel radiological exposure will also be reduced since the eliminated equipment will not be operated, maintained, decontaminated and decommissioned.

2.5.2 Front-End and Back-End Vitrification

The front-end and back-end vitrification processes for immobilization presented in this report also offer substantial ES&H improvements over the base case being analyzed in the PEIS, which is a greenfield vitrification facility. For the vitrification can-in-canister option, all of the feed pretreatment processes, immobilization of plutonium in borosilicate glass, and surrounding the plutonium glass cans with HLW glass in DWPF canisters take place in the modified existing 221-F facility and DWPF at SRS. Additionally, interim canister storage will take place in a Glass Waste Storage Building required for the HLW vitrification program at SRS. Therefore, no new facilities are to be constructed for the back end processes, which results in significant reductions from the base case environmental impacts for construction.

Additionally, since only about 200 additional DWPF canisters will be required for this option, versus 600 additional canisters for the base case, significant reductions

from the base case environmental impacts for operations will also result. No additional waste streams will be generated for the final immobilization process for this option, which also results in significant reductions from the base case environmental impacts for operations.

2.6 Costing Data—Vitrification Can-in-Canister variant

The approach to costing the Vitrification-Can-in-Canister variant is a life-cycle cost (LCC) methodology. Costs are developed for the total overall project including initial R&D, licensing/permitting, design, construction, operation and final decommissioning. These costs are then analyzed and plotted against the end-to-end variant schedule to provide constant dollar cash flows which can then be discounted at the appropriate real discount rate. The two major figures-of-merit for each variant are the constant dollar up-front costs, i.e., all life-cycle costs prior to normal operation of each facility (this is what the government must spend to develop, design, construct, and start-up a given facility), and the discounted total life-cycle cost, which includes all "cradle to grave" project costs paid by the government and including front-end costs, revenues (if any), recurring costs, and end-of-life costs.

A "lump sum" constant dollar cost for each major facility was developed. Schedule considerations only affect the way in which the lump sum costs are "spread." Each lump sum cost, however, is compatible with the baseline schedule . Table 9 summarizes the lump sum constant dollar costs by facility. (Costs are in millions of 1996$). Operating assumptions and design bases for front-end and back-end costing are presented in Table 10.

The estimated duration of the plutonium immobilization campaign will be 10 years. Operations shall be three shifts per day, seven days per week. Allowing normal time for remote maintenance, accountability, criticality control, etc., a normal operating year should be 200 days.

Table 9. Summary constant dollar life-cycle costs for vitrification can-in-canister variant ($M 1996).

Facility	Pu processing and first-stage immobilization	Second-stage immobilization	Repository	Total end-to-end variant
Up front costs	342	222		564
Other life cycle (10 yrs of operations) plus D&D	981	167	100	1248
Total life-cycle costs	1323	389	100	1812

Table 10. Front-end and back-end operating assumptions and design basis.

Assumptions	
Plant capacity	5 tonne (5.6 ton) Pu/yr
Average plant throughput	25 kg (55 lb) Pu/day
Plant location	SRS
Plant owner	U.S. Government (DOE)
Process building type	Seismic Category 1 for Pu handling areas
NEPA, safety, permitting	DOE
Feedstocks:	
Front-end	Pits and other surplus Pu forms
Back-end	Plutonium oxide
Plant operational lifetime/total Pu processed	10 years/50 tonne (56 ton) Pu
Time from ROD to hot startup	10 years
Data source for cost information	DWPF, NRSC , Bechtel, LANL, and LLNL

2.6.1 Front-End Operating Assumptions

Since the front-end plutonium processing and vitrification operation is dominated by the shipping/receiving and recovery operations, our assumptions are that all nonremote handled operations for the end-to-end variant will be contained in a single plutonium facility. Specific examples include all plutonium recovery operations and all immobilization operations not involving the final pour of HLW glass. Such operations require similar glove box and ventilation systems as those used for the recovery operations and would not be contained in a separate facility in any reasonable implementation.

The facility sizing and cost estimates were developed using the cost estimating procedure outlined above and are based on the second-level flow diagrams for this facility. The nominal costs developed here assumed that the plutonium processing facilities are actually new facilities. The costs for use of existing facilities were included as an optimistic cost case. R&D costs are those for the specific operations identified on the second level flow diagrams which can be performed in a standard plutonium processing facility (e.g., no remote handled operations, only glove box operations). Post construction start-up costs are estimated as 1.5 years of operating costs based on the anticipated start-up schedule. Waste disposal costs are based on plutonium throughput and are costed at $10,000 per drum for TRU waste and $2,000 per drum for LLW.

Table 11 shows the summary of the front-end plutonium processing and vitrification LCC costs.

Table 11. Front-end facility plutonium processing and vitrification LCC summary for vitrification can-in-canister variant ($M 1996).

End-to-end variant	Cost	Basis
"Preoperational" up-front costs		Per systems analysis model
1. R&D	83	
2. NEPA, licensing, permitting	6	
3. Conceptual design	2	
4. Q/A, site qualification, S&S	0	
5. Postconstruction start-up	40	
6. Risk contingency (derived from uncertainty analysis)	8	
SUB OPC	139	
"Capital" OR "TPC" up-front-costs (TEC)		
7. Title I, II, III engineering, design & inspection	20	
8a. Capital Equipment	41	
8b. Direct & indirect construction/modification	39	
9. Construction management (% of category 8)	4	
10. Initial spares (technology dependent)	4	
11. Allowance for indeterminates (AFI) (% of Cats 7–10)	27	
12. Risk contingency	68	
Sub TEC	203	
Subtotal up-front cost	341	
plutonium Processing at LANL	1	
Total up-front cost	342	
13. Operations & maintenance staffing	670	
14. Consumables including utilities	0	
15. Major capital replacements or upgrades (% of capital)	40	
16. Waste handling & disposal (TRU, mixed, and LLW)	44	
17. Oversight - DOE or NRC	10	
18. M&O Contractor fees (2%)	15	
19. Payments-in-lieu-of-taxes to local communities (PILT) (1%)	8	
20. D&D	159	
21. Revenues (if applicable)	n/a	
22. Government subsidies or fees to private-owned facilities	n/a	
23. Transportation of Pu forms to facility	35	
24. Storage of Pu at existing 94-1 site facility	0	
Sub other LCCs	981	
Total LCC (Front-end Facility)	1323	

2.6.2 Back-End Vitrification Cost Basis

Back-end facility and modification costs are estimated at a preconceptual level. The pricing level is based on 1996 dollars. Escalation is excluded. The estimates also assume a normal schedule without delays.

Noteworthy preoperational costs include R&D, waste form qualification, NEPA/licensing, and costs for core team from completion of Title II design to award of license.

The capital cost estimates are based on security upgrades for DWPF. The method of estimating is based hardened receiving area and DWPF security upgrades—pre-conceptual quantity takeoffs, HVAC, special features (lined cells, etc.) or $/sq ft or $/cu ft.

The capital cost estimate includes direct costs, indirect field costs, total field costs, contractors costs and profit, construction management, A-E cost, management costs, initial spares, and contingency.

The operation and maintenance (O&M) cost estimate include costs for personnel wages, consumables, material and maintenance expenditures, and waste disposal.

Operation costs for personnel wages are based on the increase in DWPF facility manpower loading attributable to the mission. The cost for incremental facility maintenance and spares is estimated based on percent of capital cost for increased operations and capital investment. Consumables items such as chemicals are base on data in *Chemical Marketing Report* dated 1989. The cost for utilities and services, including materials, safety, environmental and security to operate the facilities, is estimated using a factor of 10% of the personnel wages. These cost factors are based on previous experience with projects of similar scope.

Waste disposal is based on unit volume costs for disposal of transuranic (TRU) waste to the Waste Isolation Pilot Plant (WIPP) and low-level solid wastes to a shallow land burial site. A 15% contingency is included in the operating cost.

Table 12 shows the summary of the back-end vitrification processing LCC costs.

2.6.3 Repository Costs

The estimated cost for disposal of the immobilized waste forms in a repository is based upon information contained in the Federal Register notice (52 FR 31508) published by the Department of Energy on August 20, 1987, and entitled *Civilian Radioactive Waste Management: Calculating Nuclear Fund Disposal Fees for DOE Defense Program Waste*. This document from the Office of Civilian Radioactive Waste Management (OCRWM) is a public notice of it's approach to interpreting the

Table 12. Back-end vitrification LCC summary—vitrification can-in-canister at SRS ($M 1996).

End to end variant	Cost 1996 $M	Basis
"Preoperational" or "OPC" costs		
1 R&D Waste form qualification	115	
2 NEPA, licensing, permitting	6	
3. Conceptual design	1	
4. Q/A site qualification, S&S	9	
5. Post-construction start-up	11	1.5 × annual staff costs
6. Risk contingency (25%)	28	
Subtotal	170	
"Capital" or "TPC" up-front costs (TEC)		
7. Title I, II, III engineering, design & inspection	8	
8a. Capital equipment	(in 8b)	
8b. Direct & indirect construction/modifications	23	
9. Construction management	0	
10. Initial Spares (technology dependent)	4	
11. Allowance for indeterminates (AFI)	0	
12. Risk contingency	17	
Sub TEC	52	
Total up-front (TPC) for back-end facility	222	
Other life cycle costs		
13. Operations & maintenance Staff size (67 FTE)	73	
14. Consumables including utilities	31	Chem Marketing Prices Report
15. Major capital replacements or upgrades (% of capital)	44	
16. Waste handling & disposal (TRU, mixed and LLW)	0	
17. Oversight - DOE or NRC	10	
18. M&O Contractor fees (2%)	5	
19. Payments-in-lieu-of-taxes to local communities (PILT) (1%)	2	
20. D&D (% of capital or $ estimate)	2	
21. Revenues (if applicable)	0	
22. Government subsidies or fees to private-owned facilities [TBD by ORNL]	0	
23. Transportation of Cs^{137} to facility	0	
24. Storage of Pu at existing 94-1 site facility	0	
Sub other LCC	167	
Grand total back-end LCC	389	

requirement, under the Nuclear Waste Policy Act of 1982, for allocating the costs of developing, constructing, and operating repositories between atomic energy defense wastes and commercial high-level spent fuel.

In this notice, DOE identified a preferred cost sharing approach between defense and civilian wastes. According to the formula, the repository costs per canister of DHLW is approximately $500K based on a total life cycle cost analysis completed in September 1996. "Analysis of the Total Life-Cycle Cost of the Civilian Radioactive Waste Management Program", DOE/RW-0479, U.S. Department of Energy, Office of Civilian Radioactive Waste Management, September 1996."

2.7 Schedule

2.7.1 Overall Schedule

A preliminary, estimated schedule to deploy, operate and decommission (or convert) the vitrification can-in-canister variant immobilization facilities has been developed by combining schedules for the front end and immobilization facilities. This combined schedule is presented in tabular form in Table 13 and Table 14 and in Gantt chart form in Figure 16 and Figure 17 at the end of this section. The currently scheduled date of the Programmatic Environmental Impact Study (PEIS) Record of Decision (ROD) is in the last quarter of 1996.

A new capital project will be required to implement the vitrification can-in-canister plutonium immobilization variant, which includes the design and construction of modifications to existing DOE SRS facilities for front end and immobilization facilities. An assumption is that DOE line item projects will be conducted in accordance with DOE Orders and the congressional funding cycle. The planning basis is that key decisions (KD) for Approval of Mission Need (0), Approval of New Start (1), Commence Detailed Design (2), Commence Construction (3), and Commence Operations (4) will be performed by the DOE in support of this plutonium immobilization variant.

An R&D program has been identified to develop and demonstrate the immobilized formulation and process equipment.

National Environmental Protection Act (NEPA) activities are included. For the vitrification can-in-canister with modifications to existing DOE SRS facilities for front end and immobilization facilities, it is assumed that a site-specific Environmental Impact Statement (EIS) will be required following the programmatic EIS. After the Final EIS and its ROD, Title II design for the front end and immobilization facilities can begin.

Table 12. Back-end vitrification LCC summary—vitrification can-in-canister at SRS ($M 1996).

End to end variant	Cost 1996 $M	Basis
"Preoperational" or "OPC" costs		
1 R&D Waste form qualification	115	
2 NEPA, licensing, permitting	6	
3. Conceptual design	1	
4. Q/A site qualification, S&S	9	
5. Post-construction start-up	11	1.5 × annual staff costs
6. Risk contingency (25%)	28	
Subtotal	170	
"Capital" or "TPC" up-front costs (TEC)		
7. Title I, II, III engineering, design & inspection	8	
8a. Capital equipment	(in 8b)	
8b. Direct & indirect construction/modifications	23	
9. Construction management	0	
10. Initial Spares (technology dependent)	4	
11. Allowance for indeterminates (AFI)	0	
12. Risk contingency	17	
Sub TEC	52	
Total up-front (TPC) for back-end facility	222	
Other life cycle costs		
13. Operations & maintenance Staff size (67 FTE)	73	
14. Consumables including utilities	31	Chem Marketing Prices Report
15. Major capital replacements or upgrades (% of capital)	44	
16. Waste handling & disposal (TRU, mixed and LLW)	0	
17. Oversight - DOE or NRC	10	
18. M&O Contractor fees (2%)	5	
19. Payments-in-lieu-of-taxes to local communities (PILT) (1%)	2	
20. D&D (% of capital or $ estimate)	2	
21. Revenues (if applicable)	0	
22. Government subsidies or fees to private-owned facilities [TBD by ORNL]	0	
23. Transportation of Cs^{137} to facility	0	
24. Storage of Pu at existing 94-1 site facility	0	
Sub other LCC	167	
Grand total back-end LCC	389	

se

I

se

in

e

e of

2.7 Sche

2.7.1

A chedule to de

conve

devel

comb

chart

date c

(ROD)

996.

A new cap e required to implement the vitrificati an-in-canister

ant, which includes the design and struction of

SRS facilities for front end and imm lization faciliti

Start (1), Comme

Detailed Design (2), Commenc perations (4) will

performed by the DOE in support of this plutonium immobilizat variant.

An R&D program has been identified to develop and demons te the immobilize

fo

nal Envi ntal Pro on Act (NEPA) activities are included. For the

vi on can-i ter with lifications to existing DOE SRS facilities for f

en immobil facilitie hat a site-specific Environmental

latement will be r g the programmatic EIS. After th

and its I itle II de nt end and immobilization faciliti

Table 13. Front-end facility schedule breakout.

Task no.	Task name	Duration	Start date	Finish date	Predecessors
1	Congressional funding and initial activities	1287d	10/2/95	9/5/00	
2	ROD KD 0 Approval for Mission Need	0d	1/1/97	1/1/97	
3	Title I Authorization Process	104w	1/1/97	12/29/98	2
4	Full Funding Authorization Process	88w	12/30/98	9/5/00	3
5	R&D funding	0d	10/2/95	10/2/95	
6	A-E selection	12w	1/1/97	3/25/97	2
7	Select NEPA contractor	12w	1/1/97	3/25/97	2
8	R&D, demo, test, integrated prototyping and proc. eng	1584d	10/2/95	10/25/01	
9	HYDOX	522d	10/2/95	9/30/97	5
10	NDA	522d	10/2/95	9/30/97	5
11	Bisector	522d	10/2/95	9/30/97	5
12	ARIES Integrated dismantlement prototype	522d	10/2/95	9/30/97	5
13	OY Decon	522d	10/1/97	9/30/99	
14	Salt processing	522d	10/1/97	9/30/99	
15	Non-Pu component declass.	522d	10/1/97	9/30/99	
16	ZPPR fuel proc.	522d	10/1/97	9/30/99	
17	Integrated prototyping and eng	108w	10/1/99	10/25/01	12,13,14,15,16
18	Conceptual design, NEPA , permitting	1660d	1/1/97	5/13/03	
19	Preferred site selection	48w	1/1/97	12/2/97	2
20	NEPA/EIS and site selection	660d	4/21/99	10/30/01	7,22
21	Permitting	320w	3/26/97	5/13/03	6,7
22	Conceptual Design	108w	3/27/97	4/20/99	6
23	Project authorization, Title I design, PSAR	780d	1/1/97	12/28/99	

Table 13. (continued).

Task no.	Task name	Duration	Start date	Finish date	Predecessors
24	KD#1 Approval for start	0d	1/1/97	1/1/97	2
25	Title I Authorization	0d	12/29/98	12/29/98	3
26	Title I Des & PSAR	36w	4/21/99	12/28/99	3,22
27	Documentation to DNFSB, review process, Title II des., FSAR, DNFSB release for construction	1200d	12/28/99	8/3/04	
28	KD#2- Start Title II Design	0d	10/30/01	10/30/01	4,20,26
29	Submit documentation to DNFSB	0d	12/28/99	12/28/99	26
30	DNFSB oversight process	240w	12/29/99	8/3/04	29
31	Title II Design & FSAR	60w	10/31/01	12/24/02	28
32	DNFSB approval/KD#3/Release for Construction	0d	8/6/03	8/6/03	30FS-52w
33	Construction, equipment installation, startup, test, ORR	832d	8/6/03	10/12/06	
34	Construction	120w	8/6/03	11/22/05	32
35	Procurement	92.2w	8/6/03	5/11/05	32
36	Equipment Installation	62.2w	9/2/04	11/10/05	35FS-36w,17
37	Startup, Preop testing, ORR	48w	11/11/05	10/12/06	34FS-24w,36
38	Operations	2400d	10/12/06	12/24/15	
39	KD#4 Commence Operation	0d	10/12/06	10/12/06	37,21
40	Operation	480w	10/13/06	12/24/15	39
41	D&D	720d	1/23/15	10/26/17	
42	D&D	144w	1/23/15	10/26/17	40FS-48w

Note: Schedule durations are nominal, the detailed date and day information is not significant. It is merely a function of the scheduling program calendar.

1					
8					
9			10/?		
10			10/1		
	ctotyping				1
	tual design, permitting	1660d	1/1/97		
13	ed site selection	48w	1/1/97		2
14	BIS and site n	660d	4/21/99		7,16
15	Permitting	320w	3/26/97	5/13/03	6,7
16	Conceptual Design	108w	3/26/97	4/20/99	6
17	Project authorization, Title I design, PSAR	780d	1/1/97	12/28/99	
18	l Approval for start	0d	1/1/97	1/1/97	2
19	I Authorization	0d	12/29/98	12/29/98	3
20	IDes & PSAR	86w	4/21/99	12/28/99	3,16
21	mentation to SB, review process, II des., FSAR, SB release for construction	1200d	12/28/99	8/3/04	
	XDs Desi		/30/01	10/30/01	4,14,20

Table 14. (continued).

Task no.	Task name	Duration	Start date	Finish date	Predecessors
23	Submit documentation to DNFSB	0d	12/28/99	12/28/99	20
24	DNFSB oversight process	240w	12/29/99	12/28/04	23
25	Title II Design & FSAR	60w	10/31/01	12/24/02	22
26	DNFSB approval/KD#3/Release for Construction	0d	8/6/03	8/6/03	24FS-52w
27	Construction, equipment installation, startup, test, ORR	832d	8/6/03	10/12/06	
28	Construction	120w	8/6/03	11/22/05	26
29	Procurement	92.2w	8/6/03	5/5/11/05	26
30	Equipment Installation	62.2w	9/2/2/04	11/11/10/05	29FS-36w,11
31	Startup, Preop testing, ORR	48w	11/11/10/05	10/10/12/06	28FS-24w,30
32	Operations	2400d	10/10/2/06	12/2/24/15	
33	KD#4 Commence Operation	0d	10/10/2/06	10/10/12/06	31,15
34	Operation	480w	10/13/06	12/24/15	33
35	D&D	720d	1/23/15	10/26/17	
36	D&D	144w	1/23/15	10/26/17	34FS-48w

Note: Schedule durations are nominal, the detailed date and day information is not significant. It is merely a function of the scheduling program calendar.

ce 16. Front-end schedule.

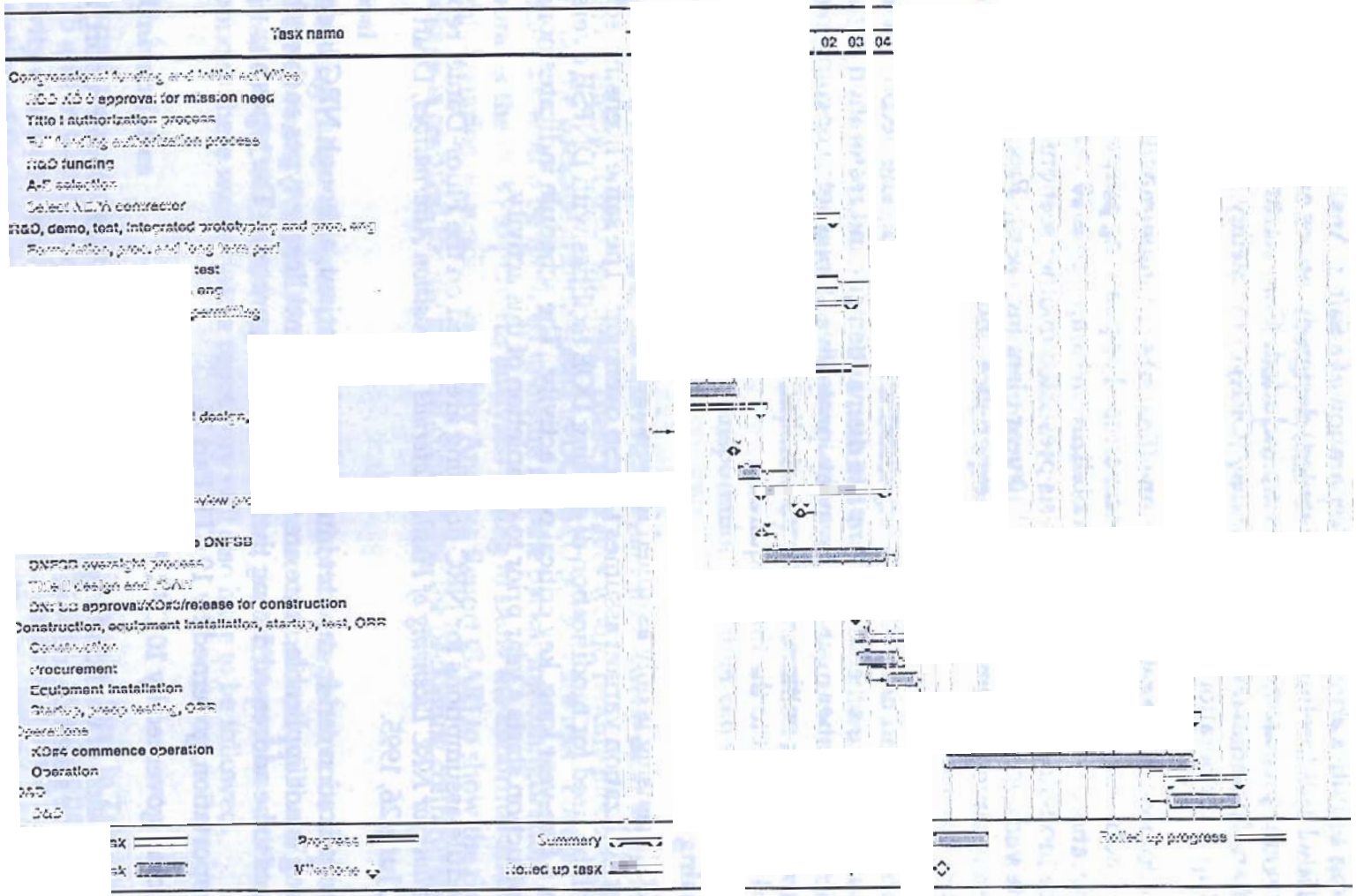
Task name
02 03 04
Congressional funding and initial activities
RGD XD 6 approval for mission need
Title I authorization process
Full funding authorization process
R&D funding
A-E selection
Select NEPA contractor
R&D, demo, test, integrated prototyping and proc. eng
Formulation, proc. and long term perf
test
eng
permitting
design,
view pro
DNFSB
DNFSB oversight process
Title II design and FSAR
DNFSB approval/XD#3/release for construction
Construction, equipment installation, startup, test, ORR
Construction
Procurement
Equipment installation
Startup, preop testing, ORR
Operations
XD#4 commence operation
Operation
D&D
D&D
Progress
Summary
Milestone
Rolled up task
Rolled up progress

Permitting activities are indicated. Preparation of a Safety Analysis Report is included. Title I & II (preliminary and detailed) design durations are indicated. Construction and procurement durations are included. Cold startup, preoperational testing, and an Operational Readiness Review (ORR) of the facility is included, followed by hot startup and operations.

The time to process the reference 50 tonne (56 ton) of plutonium will vary with plutonium loading and actual operating scenarios. For planning purposes, the estimated duration of the plutonium immobilization campaign is 10 years. (Detailed performance modeling by Systems Analysis presented in other sections of this report may indicate variations from the nominal 10 year planning basis). Process improvements, plutonium immobilization experience, and increased plutonium loading could shorten this schedule.

Decontamination and decommissioning duration is included. The decommissioning method assumed for the schedule is complete dismantlement and restoration of the site for unrestricted use. Other methods (layaway, protective storage, etc.) or combinations of methods, depending on time, cost benefit studies, or radiation exposure, might be selected with an impact to the time required.

NRC Licensing

Since NRC licensing is only assumed for new facilities, the vitrification can-in-canister immobilization variant assumes DNFSB oversight. The same licensing activity duration will be used for modification of existing DOE facilities with DNFSB oversight. Licensing is a five-year long, key critical path activity. The schedule indicates nonsafety related construction starts a year prior to completion of this activity.

The schedule assumptions for NRC licensing are based on the Fluor-Daniel report, *Regulatory Plans for NRC Licensing of Fissile Materials Disposition Alternatives*, Draft Revision A, June 26, 1995.

For the vitrification can-in-canister immobilization variant, although NRC licensing for processing is not applicable, there are two other distinct license types each with distinct issues to be addressed during the NRC licensing process. The types are:

- Transportation, governed by 10 CFR Part 71
- Disposal, governed by 10 CFR Part 60

A brief discussion of the license types, extracted from the Fluor-Daniel report, and their impact on the schedule follows.

Transportation. The regulatory requirements associated with transportation are well settled and include consideration of the spectrum of transportation activities from small quantities of plutonium to very large amounts of plutonium. It should be noted that transportation of plutonium by commercial licensees, including the transport of plutonium for use as fuel in power reactors, has occurred. Thus, with respect to the

activity of transportation of plutonium, a comprehensive set of regulatory requirement are established in the NRC regulatory system to implement the requirements of the Atomic Energy Act. Those regulations provide a well defined means to address the issues associated with transportation of large amounts of plutonium in the various elements of the DOE plutonium disposition program.

Container Certification. The immobilization variants require a licensed container for transportation. Use of an NRC certified transportation container is a condition of the general license. The review and certification of the transportation container, when combined with DOT regulations regarding carriage, provides the means for the NRC to conclude that the means to transport the radioactive material does not compromise public health and safety. Transportation container certification is an independent licensing activity.

The Fluor-Daniel report presents the base case schedule for NRC certification of a transportation container, which has a nominal two year duration, based on required procedural steps. Although there is provision for a hearing, it is unlikely to occur since no one, single community or area is impacted by the certification of a transport cask.

This activity for certification of a transportation container can be accommodated within the overall schedule.

A family of potential packages, 6M/2R-like packages, can be used for transporting the fissile material (excluding pits). These packages would require modifications to insure that the package criteria stated in DOE-STD 3013-94 are met. Further modifications would be required to insure that the packaging configuration incorporates the PCV, to perform analysis/testing to show the abnormal and normal accident scenarios, to modify the Safety Analysis Report (SAR) to show the changes and the package is certified for the material considering the packaging configuration.

Disposal

Following rule making or clarification in authorizing legislation for emplacing the immobilized forms in an HLW repository, a license amendment will have to be submitted to NRC for these waste forms. Further, the NEPA process which incorporates these wastes into a repository will also have to be followed.

2.7.2 Uncertainties

The preliminary, estimated schedule presented in tabular form in Table 14 and Table 15 and in Gantt chart form in Figure 16 and Figure 17 is a logic network defined by activity durations and logical ties between them. As such, it lends itself to examination of the impacts in schedule variations. However, at this stage such analysis has not been done.

Permitting and Licensing. Any new facility will be regulated/licensed by NRC. However, DOE external oversight activities may influence the planning basis for use of

existing facilities. The Advisory Committee on External Regulation of DOE Nuclear Facilities made recommendations to the Secretary on external regulation in early 1996. Recommendations from this committee will influence decisions on whether and what facilities will be regulated externally, and what external organization will be responsible. The DOE is currently preparing an action plan for implementing these recommendations. Decisions on external regulation could impact the permitting and licensing schedule durations. The same five year critical path activity for licensing has been assumed for both new facilities or use of existing facilities.

Congressional Funding. The congressional funding cycle is a critical path activity. Improvements are not anticipate. However delays would impact the overall disposition completion date.

R&D The program identified to develop and demonstrate the immobilized formulation and process equipment will be better defined in the long range R&D plans being prepared. However, relative to NEPA and other critical path activities the needed development and demonstration will either be readily achievable in time to support the baseline schedule, or critical problems that disqualify a variant will be identified early.

Waste Form Certification and Qualification. For the vitrification can-in-canister variant, the waste form is similar to the form which has been accepted for HLW disposal with the exception of actinide content. The schedule shown assumes full certification can be accomplished within the activity duration for the balance of R&D, demonstration & test.

Site-Specific EIS and Permitting. For the non-NRC front end and immobilization facilities, using existing SRS facilities, site specific NEPA and site selection activities are critical path activities, delays or improvements would impact the overall disposition completion date. Other permitting activities are not shown as critical path activities, but would need to be monitored closely during implementation to determine if delays would impact the overall disposition completion date.

Title I & II Design, Procurement, Construction, and SAR Preparation. For the front end and immobilization facilities, using existing SRS facilities, these activities offer opportunities to refine and improve on the schedule as more definition is achieved. Some are critical path activities, others may or may not impact the overall disposition completion date.

Cold Startup and Preoperational Testing. These activities offer opportunities to refine and improve on the schedule as more definition is achieved in the future. These are critical path activities, thus delays or improvements would impact the overall disposition completion date.

Hot Startup and Operations. These activities offer opportunities to refine and improve on the schedule as more definition is achieved in the future. Process improvements, plutonium immobilization experience, and increased plutonium loading

ties, thus delays or

point. Whil hey are important t all program, they do not impact the c erall disposition co

Reposit Availability Uniform linear s e assumed. I es

ailable.

2.8 Institutional Issues

s. It is vital that federal agen that building public and ents of process and openne

support and the timely satisfacti he success or failure of programs endorsed by selection processes

to

ac

al, and public support, if th eve

the suc nd

co ton elected n.

H ma e towa mber

of l, i ic and e. An

ea he provi e

ast in

elected re

stituents Measuring

tion" alte

L-

Ba
or

oice of
er the in

in
aste
ne
and

addition a c , but
weapons-u
14 tonnes (1 er-
Reactor fue
mixed-oxide fuel.

- Approximately 20% of the world's electricity to
plants; sinc s a by-pr
burning of n after th he
reactor. heat and
reactors comes from the burning of plu

There currently appears to be little questio rgy
establishments as to how they will dispose of separated plutonium:

- Western Europe. Virtually all plutoniu parated from Western Europe n
power-reactor fuel is to be fabricated in OX fuel for light-water power
reactors;
- Jap n Japanese power-reactor fuel is to
be ycled into MOX fuel for -water reactors with the remainde
bei l into MOX fuel for Japa lemonstration fast neutron and
ad erter reactors.
- Ru

um into el fo
collapse oviet
up fuel y
n of fast-neutron plutonium b reactors. That is si an of

significant part of Russia's nuclear establishment but it is not clear at this time where the funds to build these reactors would come from. Russia correctly points out that only about 1% of the energy from uranium is extracted in current reactors. Breeder reactors extract some 50 to 100 times more energy from a given quantity of uranium than do current commercial reactors.

The international implications of U.S. plutonium-disposition strategy deserves both analysis and public debate. A primary objective of the technical evaluation process will be to prepare the United States to engage Russia, and other nations with relevant interests and experience, in efforts that would lead to making reuse of the plutonium for weapons much more difficult.

The administration's nonproliferation policy states that the United States does not encourage the civil uses of plutonium and does not itself reprocess plutonium for either nuclear power or nuclear explosive purposes. However, the policy also states that the U.S. will maintain its existing commitments regarding the civil use of plutonium in Western Europe and Japan. In addition, the policy commits the U.S. to explore means to limit the stockpiling of plutonium from civil nuclear programs.

Since it is assumed that the FMDP is to be carried out under some degree of transparency and reciprocity, negotiations must be carried out to arrive at mutually acceptable conditions to preclude unintentional unilateral disarmament.

2.8.3 Sociopolitical Issues

Inspection by the IAEA. As noted by the NAS study, efforts to stem the spread of nuclear weapons are critically dependent on the strength and credibility of the systems and organizations given the responsibility to carry them out. A "key elements" of the President's September 27, 1993 Nonproliferation and Export Control Policy is to "Submit U.S. fissile materials no longer needed for our deterrent to inspection by the International Atomic Energy Agency." Inspection by IAEA will provide added assurance to the public that all fissile material is accounted for and that risks of theft and proliferation are minimized. The IAEA's traditional approach to safeguards focused on verifying declared facilities at declared sites. Even though the IAEA has always had statutory authority to inspect other sites, support from its key member states has not been sufficient to enable it to do so meaningfully to date. The IAEA does not have an enforcement or security function but rather it provides independent accounting and auditing functions. To participate in monitoring fissile materials released from nuclear weapons programs, IAEA will need greater resources.

2.8.4 Environment, Safety, and Health Issues

According to the NAS report, "the greatest dangers to public welfare associated with the existence and disposition of weapons plutonium are unquestionably those connected with national and international security. The preeminence of these security dangers, however, should not obscure the need for careful attention to the environment, safety, and health (ES&H) risks implied by the different approaches to weapons

dismantlement, fissile materials storage, and long-term disposition of weapons plutonium."

The Stabilization Program is assumed to convert the plutonium to a form compatible with the DNFSB Recommendation 94-1. The short term ES&H concerns must be coordinated with the nuclear nonproliferation objectives. The December, 1995 *Plutonium Stabilization and Immobilization Workshop* is an example of the ongoing effort needed to maintain communication and promote a common understanding on stabilization and immobilization technology requirements.

New and more stringent ES&H regulations are being imposed on the U.S. nuclear weapons complex. These are dynamic standards, and can be expected to continue to change over time. Currently, ES&H requirements set the pace for each stage of plutonium processing through out the immobilization processes. The time required to implement any immobilization choice will be heavily influenced by the licensing and approval process, including the extended safety and environmental analysis required for each option. Ultimately, these ES&H standards will affect the ease and cost of achieving different immobilization options.

2.9 Hybrid Vitrification Options

There are a of number of feasible hybrid options involving a combination of individual disposition alternatives or feed materials. The most logical hybrids are:

- A MOX Immobilization hybrid in which impure plutonium is immobilized and pure plutonium is made into MOX fuel for reactor irradiation.
- A hybrid in which low assay plutonium materials are blended with higher assay materials prior to immobilization, thereby allowing much higher levels of impurities to be immobilized without degrading the immobilized product.
- A hybrid combining plutonium and non-plutonium actinides that must be managed similarly as the excess plutonium.

2.9.1 MOX Vitrification Hybrid

Hybrid disposition approaches, in which different feed materials (e.g. pure plutonium oxide from pits versus impure plutonium feeds) are dispositioned by different approaches, open the possibility of utilizing existing facilities in creative ways to achieve FMDP objectives. As an example, the completed but never used New Special Recovery (NSR) Facility at SRS could be used as designed to directly support the immobilization portion of a hybrid variant with relative little modification. The pit recovery operations, which support the MOX fuel fabrication portion of the hybrid, could then be co-located with the MOX fuel fabrication operations with little impact because the required backup aqueous chemical operations would be available at the NSR facility at SRS. Other possible uses of existing facilities are also possible; these approaches need further evaluation.

The discussion presented below assumes that 32.5 tonnes (36.4 tons) of pure plutonium is converted to MOX fuel and the other 17.5 tonnes (19.6 tons) of the less pure plutonium are vitrified. This discussion also assumes that all plutonium coming to FMDP has been stabilized in accordance with the DNFSB Recommendation 94-1 and contains a plutonium concentration of ≥ 50 wt %.

2.9.1.1 Logic and Benefits of MOX- Vitrification Hybrid

Immobilization of surplus plutonium by vitrification has been studied in this report for all plutonium-bearing materials that could potentially become part of the disposition mission. By the use of blending, vitrification has the potential to convert ≥ 50 wt % plutonium stocks to glass without further separation of the plutonium from matrix materials. Much of the existing impure plutonium inventory exists because of economic and technical difficulties associated with separating plutonium from these materials. The flexibility of glass to incorporate these impurities could provide technical, economic, and institutional incentives to use glass for this portion of the inventory.

Potential benefits of the MOX-Vitrification Hybrid Option include:

- Hybrid approaches may provide better utilization of existing facilities, including fewer equipment modifications, thereby reducing start-up cost.
- Hybrids approaches could facilitate an earlier start of disposition through better utilization of existing facilities. Start-up of existing capability (especially in terms of installed equipment) and systems, such as NSR would reduce the time to complete pre-operational activities, such funding appropriations, construction, start-up, and licensing.
- Because parallel processing paths would be utilized, the MOX-Vitrification hybrid approach could result in somewhat earlier completion of the plutonium disposition mission. For example, by reducing the quantity of plutonium to be processed into MOX fuel rods and burned in reactors by about 33%, the hybrid approach could result in a 6 year earlier completion of the LWR variant. Or it could reduce by one the number of reactors needed for the same program duration.
- *Russian Cooperation*. A hybrid option might facilitate better Russian cooperation. MINATOM has expressed strong opposition to disposition of pure plutonium as a waste because they prefer to use their pure plutonium materials as an energy resource. However, MINATOM may be responsive to vitrifying and disposing of their impure material.

Glass can readily accommodate the more problematic materials in the surplus plutonium inventory, such as plutonium alloys, alloy reactor fuel (unirradiated), oxide reactor fuels (unirradiated), uranium/plutonium oxide.

2.9.1.2 Plutonium Feed Materials

Plutonium alloys. Common alloys of plutonium include plutonium-gallium, plutonium-aluminum, plutonium-beryllium, plutonium-zirconium and plutonium-uranium. After conversion to oxide, all of these alloy constituents can be incorporated into glass. Beryllium oxide is easily incorporated into glass but incorporation of gallium oxide is not well characterized but would be expected to be about the same as aluminum oxide. Uranium oxides are also easily incorporated into glasses.

Alloy Reactor Fuels (Unirradiated). Alloy reactor fuels are primarily the ZPPR plates located at ANL-W. These are plutonium-uranium alloys with a small amount of aluminum or molybdenum. As with the plutonium alloys, aluminum and uranium are readily accommodated into the glass. Molybdenum can be incorporated as oxide into the glass, but it is generally incorporated as metal.

Oxide Reactor Fuels (Unirradiated). These are primarily mixed oxide (uranium-plutonium) fuel pins located at ANL-W. As discussed above, uranium has a high solubility in glass.

Uranium/Plutonium Oxide. Uranium oxides are easily incorporated into glass.

2.9.1.3 Implementation

The hybrid analyzed is depicted in Figure 18. Approximately 32.5 tonnes (36.4 tons) of plutonium in the form of pits, clean metal, and clean oxide are converted to MOX fuel which is burned in existing LWRs. The remainder, about 17.5 tonnes (19.6 tonnes) of plutonium in various impure forms, would be vitrified through the can-in-canister variant.

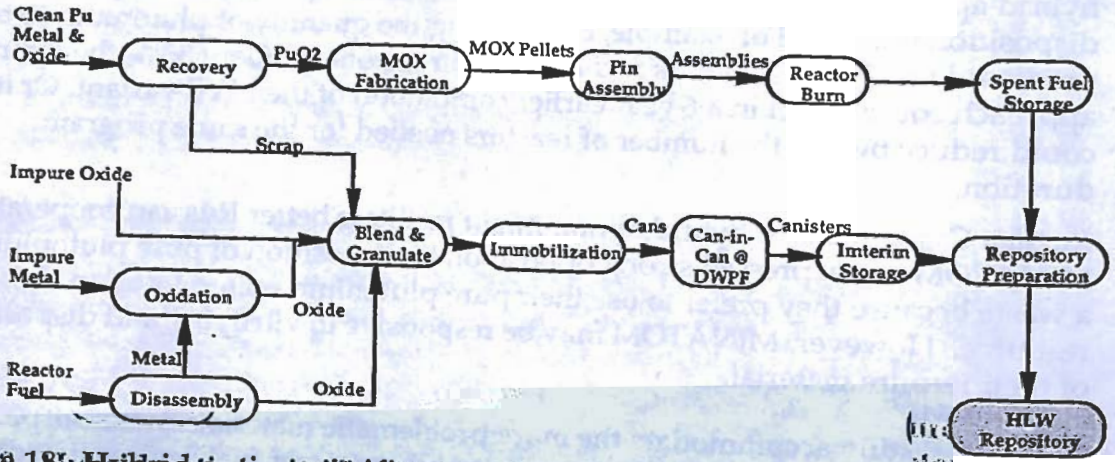

Figure 18. Hybrid option, vitrification can-in-canister with MOX fuel fabrication for reactor burn.

Schedule. The schedule assumed in the analysis for this hybrid option is slightly changed from that presented in Figure 17; vitrification in the small cans would begin in 2004. There may be an opportunity to further modify the schedule to optimize the hybrid option, if this is option were to be chosen in the upcoming ROD. Potentially, construction, start-up and processing could take place in a shorter period of time. However, it may be desirable to have the plutonium vitrification operations proceed in parallel with the fabrication of MOX fuel so that the plutonium-bearing scrap from MOX fuel fabrication operations could be fed into the vitrification process.

2.9.2 Low Assay Plutonium Immobilization

Hybrid disposition approaches, in which low assay feed materials (e.g. incinerator ash, etc.) are blended with higher assay materials prior to immobilization, open the possibility of utilizing existing facilities in different ways to achieve the objectives of both EM-60 Stabilization Program (DNFSB Recommendation 94-1) and FMDP objectives. As an example, DOE/EM-60 is considering transferring low assay materials to WIPP after treatment by a variety of methods including recovery of plutonium and its and purification to MOX fuel requirements. These materials could be blended with higher grade plutonium materials without prior treatment and then immobilized in glass thereby avoiding much of the required processing. This would possibly allow an even wider range of existing DOE facilities to be utilized. Immobilization techniques in general require that any single tramp impurity be less than 1.0 wt % in the final immobilized product. However, non-proliferation and criticality concerns require that the plutonium content of the immobilized form be less than 10 wt%. Therefore, as a general statement, tramp impurities in the plutonium feed must be less than 10 wt % to give a final immobilized product containing less than 1 wt % of that individual tramp impurity. Many of the materials in the DOE stockpile could be blended to this level without any form of processing other than calcination.

The discussion presented below assumes that 32.5 tonnes (36.4 tons) of plutonium is converted to MOX fuel and the other 17.5 tonnes (19.6 tons) of the less pure plutonium are vitrified. This discussion also assumes that all plutonium coming to FMDP has been stabilized in accordance with the DNFSB Recommendation 94-1, but that purification to a plutonium concentration of ≥ 50 wt % has not occurred.

2.9.2.1 Logic of Low Assay Plutonium Vitrification Hybrid

Immobilization of surplus plutonium by vitrification has been studied in this report for all plutonium-bearing materials forms that could potentially become part of the disposition mission. The present MD program, however, assumes that all materials to be dispositioned will have a plutonium concentration ≥ 50 wt%. Since the composition, chemical, and isotopic characteristics of the U.S. plutonium inventory vary over a wide range, a variety of processing steps requiring varying degrees of chemical purification and final form processing will be required depending on the disposition route chosen. By combining and optimizing the plutonium treatment operations associated with unstable residues with vitrification, significantly processing efficiencies, cost reduction and schedule enhancements could be realized.

Vitrification has the potential to convert much of the low assay plutonium to glass without extensive separation of the plutonium from inert matrix materials. Much of the existing impure plutonium inventory exists because of economic and technical difficulties of separating plutonium from these materials. The flexibility of glass to incorporate these troublesome impurities up to 1 wt% in the final product could provide technical, economic, and institutional incentives to use vitrification for this portion of the inventory.

Benefits of the low assay hybrid approach include:

- It reduces the need to, and avoids the cost of, separating plutonium from much of the residue or scrap inventory.
- It offers the potential to reuse facilities developed for other plutonium missions to dispose of these more problematic materials, therefore providing the U.S. Government a much greater return-on-investment.
- It reduces storage costs for impure plutonium. Nuclear criticality safety in plutonium storage facilities is assured by geometric spacing of plutonium packages. The volumes of impure plutonium at sites such as Rocky Flats has resulted in such materials being stored in a large number of facilities including old production areas, with associated high cost. Conversion to an intermediate glass form with neutron absorbers incorporated in the glass matrix allows close packing and eliminates high-cost secondary storage areas.
- Vitrification of impure plutonium to an intermediate glass form (without radioactive spike) at resident DOE sites solves transport difficulties because some of the impure plutonium materials are in chemical forms not suitable for transport to a central site for processing and disposition. Conversion to an intermediate glass creates a form which is readily transportable.
- Optimizing the plutonium treatment operations between the Stabilization and Disposition Programs and the utilizing existing facilities could result in significant cost savings for DOE.

2.9.2.2 Low assay Plutonium Feed Materials

In general the impurities in low assay materials can be grouped into the following categories: halide salts, uranium, glass formers/modifiers, carbonaceous materials, and water. Carbonaceous materials, and water can be removed by calcination; if vitrification is the chosen form, then the glass formers/modifiers simply become a portion of the required glass frit that must be added to form the vitrified plutonium product.

Glass can readily accommodate the more problematic materials in the surplus plutonium inventory such as plutonium alloys alloy reactor fuel (unirradiated), oxide reactor fuels (unirradiated), uranium/plutonium oxide, plutonium chloride-oxides, low assay plutonium residues except for halide salt residues, halides salt residues after aqueous leaching to remove the bulk of the soluble halide salts.

) wt%
ents.
g element

2.9.3

arly well su
le ^{233}U in th

About two tonnes of ^{233}U
usable and is part of the
plutonium disposition s
ORNL is primarily imp
contains other uranium
porti
mate
othe
oxides.

g ^{233}U
isoto

el pellets containing
also be accommoda
o suitable feed to the
lass form with high

3.0 Acronyms

ANL-W	Argonne National Laboratory-West
ALARA	As Low As Reasonably Achievable
ANSTO	Australian Nuclear Science and Technology Organisation
Ba	barium
CCC	Ceramic Can-in-Canister
C/S	Containment and Surveillance
CCTV	Closed Circuit Television
CFR	Code of Federal Regulations
CGF	Ceramic Greenfield Facility
CRT	container restraint Transport
CRWMS	Civilian Radioactive Waste Management System
Cs	cesium
DHLW	Defense High-Level Waste
DOE	Department of Energy
DNFSB	Defense Nuclear Facilities Safety Board
DOT	Department of Transportation
DP	Defense Programs
DWPF	Defense Waste Processing Facility
EM	Environmental Management
ET	Electrometallurgical Treatment
EIS	Environmental Impact Statement
FCF	Fuel Conditioning Facility @ ANL-W
FMDP	Fissile Materials Disposition Program
FMF	Fuel Manufacturing Facility @ANL-W
GMODS	Glass Materials Oxidation Dissolution System
Gy	Gray
HEME	High-Efficiency Mist Eliminator
HEPA	High-Efficiency Particulate Air (filter)
HEU	highly enriched uranium
HFEF	Hot-Fuel Examination Facility
HLW	High-Level Waste
HVAC	Heating, Ventilating, and Air Conditioning

IAEA	International Atomic Energy Agency
INEL	Idaho National Engineering Laboratory
LCC	Life-Cycle Costs
LLNL	Lawrence Livermore National Laboratory
LLW	Low-Level Waste
MAA	Materials Access Area
MAUA	Multi Attribute Utility Analysis
MC&A	Materials Control and Accountability
MD	Materials Disposition
MEO	Mediated Electrochemical Oxidation
MOX	Mixed Oxide: (U, Pu) O_2
MPPI	Multipurpose Processing Facility
MSO	Molten Salt Oxidation
NaCl	sodium chloride
NAS	National Academy of Sciences
NDA	Non-Destructive Analysis
NO_x	mixed oxides of nitrogen
nm	nanometer (10^{-9} meters)
nyd	nanoyards (10^{-9} yards)
NEPA	National Environmental Policy Act
NRC	Nuclear Regulatory Commission
NSR	New Special Recovery
OCRWM	Office of Civilian Radioactive Waste Management
Oy	Oralloy
PA	Protected Area
PCV	Primary Containment Vessel
PEIS	Programmatic Environmental Impact Statement
PSF	Plutonium Storage Facility
Pu	Plutonium
R&D	Research and Development
RCRA	Resource Conservation and Recovery Act
ROD	Record of Decision
RWSF	Radioactive Waste Scrap Facility
SAR	Safety Analysis Report
S&S	Safeguards & Security
SCFM	Standard Cubic Feet per Minute

SEM	Scanning Electron Microscope
SGT	Safeguard Transporter
SMF	Sintered Metal Filter
SNF	Spent Nuclear Fuel
SNM	Special Nuclear Material
SQ	Significant Quantity
SRS	Savannah River Site
SST	Safe Secure Trailer/Transport
SYNROC	Synthetic Rock
TID	Tamper Indicating Device
TRU	Transuranic Waste
TLCC	Total Life-Cycle Cost
VAM	Vitrification Adjunct Melter
VCC	Vitrification Can-in-Canister
VGF	Vitrification Greenfield Facility
WAO	Wet Air Oxidation
WIPP	Waste Isolation Pilot Plant
ZPPR	Zero Power Physics Reactor