DOE F 1325.8

United States Government

Department of Energy

Albuquerque Operations Office

memorandum

DATE: January 3, 1994

REPLY TO ATTN OF: NESD

SUBJECT: Nuclear Explosive Safety Study Report

TO: RADM Charles J. Beers, Jr., USN, Deputy Assistant Secretary for Military Application, DP-20, HQ

This memorandum is for Defense Programs' approval and signature for the attached safety study report.

I have reviewed the safety study report, "Nuclear Explosive Safety Study of B53 Mechanical Disassembly Operations at the USDOE Pantex Plant."

I concur that the studied operations are not a threat to nuclear explosive safety and meet the Nuclear Explosive Safety Standards a., b., c., and e. and other nuclear explosive safety criteria of DOE Order 5610.11; except that portion which has not been implemented, as specified in Appendix A; and of AL Supplemental Directive 5610.11. The recommendations in this study should be approved and implemented. Nuclear Explosive Safety Standard d. is evaluated by the Department of Energy (DOE) Albuquerque Operations Office, Security and Nuclear Safeguards Division's security surveys and DOE Headquarters' inspections and evaluations of Pantex Plant security operations. These surveys and inspection and evaluations verify that there are positive measures to ensure adequate security of nuclear explosives pursuant to the DOE safeguards and security requirements. Accordingly, I consider that Standard d. is met for the Pantex Plant.

I recommend approval of the attached safety study report.

Bruce G. Twining
Manager

Attachment (SRD)

TRANSMITTAL
WHEN SEPARATED FROM ENCLOSURES, HANDLE THIS DOCUMENT
AS UNCLASSIFIED
(INSERT PROPER CLASSIFICATION)

Document Transmitted Herewith Contains Classified
RESTRICTED DATA

THIS PAGE ONLY
CONFIRMED TO BE UNCLASSIFIED
DOE/OFFICE OF DECLASSIFICATION
P. T. GROVES, A.D.C. DATE: 5-16-97

SECRET

UNITED STATES
DEPARTMENT OF ENERGY
NUCLEAR EXPLOSIVE SAFETY STUDY GROUP

NUCLEAR EXPLOSIVE SAFETY STUDY OF B53 MECHANICAL DISASSEMBLY OPERATIONS AT THE USDOE PANTEX PLANT (U)

OCTOBER 1, 1993

RESTRICTED DATA
THIS DOCUMENT CONTAINS RESTRICTED DATA AS DEFINED IN THE ATOMIC ENERGY ACT OF 1954. UNAUTHORIZED DISCLOSURE SUBJECT TO ADMINISTRATIVE AND CRIMINAL SANCTIONS.

CLASSIFIED BY A. A. Nichols ORG. NESS
TITLE Chief, WSSB DATE 10/12/93

SECRET

DEPARTMENT OF ENERGY DECLASSIFICATION REVIEW
1ST REVIEW-DATE: 12/06/07
AUTHORITY: DADC DADC DADD
NAME: P.T. Downes
2ND REVIEW-DATE: 2-7-97
AUTHORITY: ADD
DETERMINATION (CIRCLE NUMBER(S))
1. CLASSIFICATION RETAINED
2. CLASSIFICATION CHANGED TO:
3. CONTAINS NO DOE CLASSIFIED INFO
4. COORDINATE WITH:
5. CLASSIFICATION CANCELLED

TABLE OF CONTENTS

		Page
	ABSTRACT	2
	TABLE OF CONTENTS	3
	SIGNATURE PAGE	4
I.	PURPOSE AND BACKGROUND	5
II.	CRITERIA	5
III.	SCOPE	6
IV.	PARTICIPANTS	6
V.	ACTIVITIES	6
VI.	FINDINGS	7
VII.	REFERENCES	16
VIII.	DISTRIBUTION	17
IX.	APPENDICES	17
	A. AL document, "DOE Order 5610.11 Implementation."	18
	B. SNL document, "Input to the B53-1 Nuclear Explosive Safety Study at the Pantex Plant (U)," dated August 18, 1993.	19
	C. LANL document, "Los Alamos Source Data for B53 Mod 1 Nuclear Explosive Safety Study (U)," WX-1-E-93-410S, dated August 27, 1993.	62
	D. M&H document, "Input Document for the B53-1 5 Year Mechanical Nuclear Explosive Safety Study (U)," dated August 30, 1993.	93

NUCLEAR EXPLOSIVE SAFETY STUDY

OF

B53 MECHANICAL DISASSEMBLY OPERATIONS

AT THE

USDOE PANTEX PLANT (U)

The report has been approved by the following members of the Nuclear Explosive Safety Study Group:

Thomas K. Devlin
Lawrence Livermore National Laboratory

Darrell D. Schmidt
Los Alamos National Laboratory

Jake E. Galloway
Battelle Pantex

Del W. Kellogg
Amarillo Area Office

J Paul Luette
Nevada Operations Office

Rodney L. Samuelson
San Francisco Operations Office

Jimmy A. Richardson
Sandia National Laboratories

Thomas Stepan
Headquarters, DP-20.1

Frank W. Rider, Chairman
Albuquerque Operations Office

DOE (b3)

S

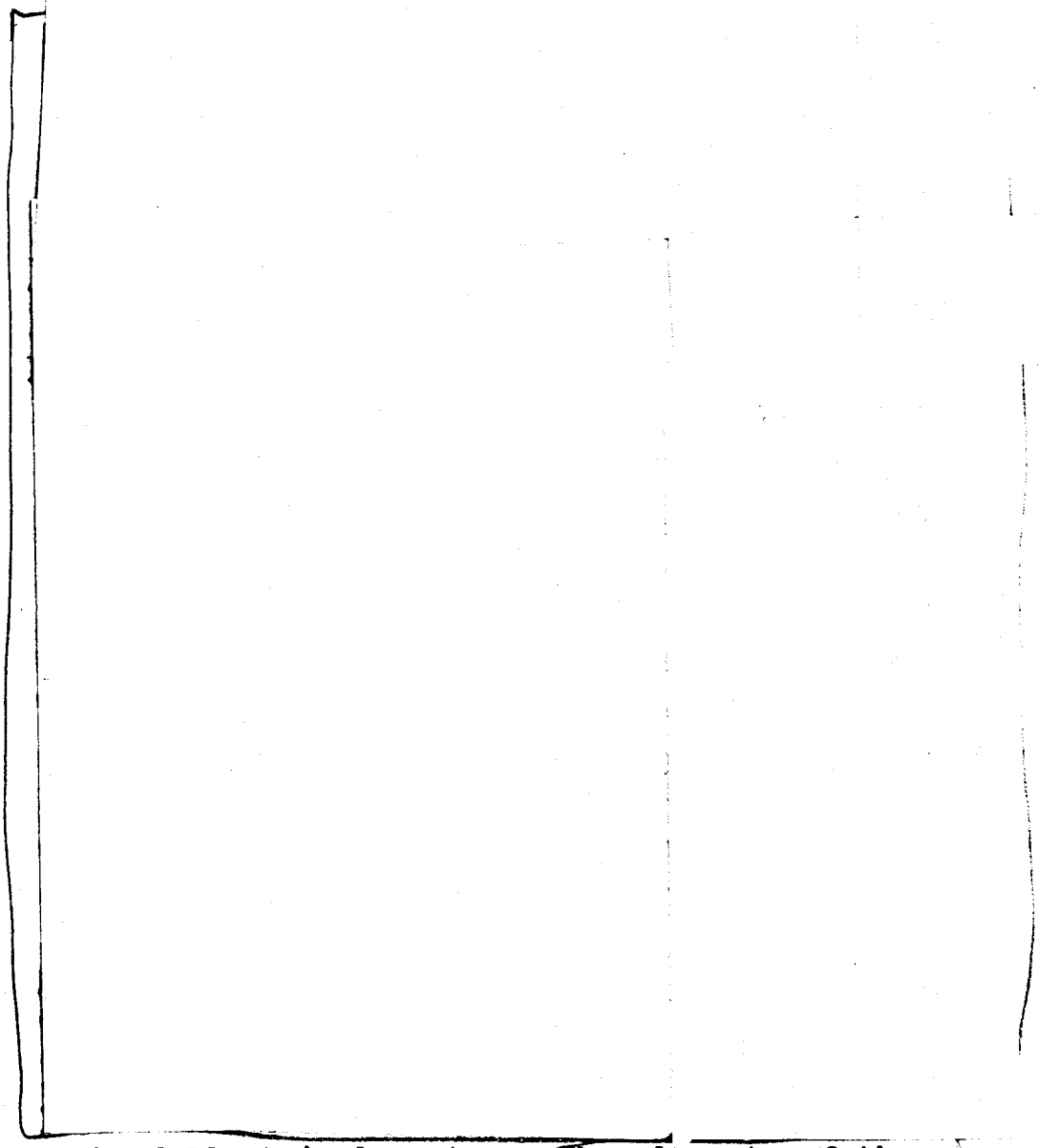

B53 Warhead Electrical System. The elements of the B53 electrical system associated with the bomb firing system are the lightning arrestor connector (LAC), the MC4065 power pack, the MC1199 electrical system safing switch, two MC4066 neutron generators, the MC744B X-unit, two MC1262 fast-rise thermal batteries, and two MC1264 thermal batteries. The B53 bomb arming and firing system is dual-channel except for the capacitor bank, and the spark gap.

C

C

The LAC provides the electrical interface to external sources of electrical energy and in conjunction with the MC2969 strong-link switch protects against electrical energy from a lightning strike. The LAC is located at the bomb/pullout cable interface.

The MC4065 power pack contains a high voltage transverter, a trigger circuit, the neutron generator low voltage attenuator, and the MC2969 strong-link switch which are potted in a stainless steel housing. The MC2969 is enabled by a unique signal provided by a source external to the bomb. The MC2969 interrupts all electrical lines, except electrical ground, going into the firing set.

The MC1199 electrical system safing switch is manually operated and provides visual indication of the switch position (safe, retard, or free-fall). The handle of the MC1199 is mechanically locked in the safe position by a solenoid-operated pin. The MC1199 may be operated to

the safe position with or without power applied to the solenoid.

DOE b(3) C

Two MC1262 fast-rise thermal battery packs are used in the B53. The MC1262 is a two-section thermal battery containing a 12-volt fast-rise section and 28-volt power section.

Two MC1264 thermal batteries are used in the B53 to provide dual channel power for the fuzing system. The MC1264 is nominally a 28-volt battery with an activated life in excess of 240 seconds. It is activated by electrical power from the 12-volt section of the MC1262.

Nuclear Explosive Safety Theme. Although the B53 was not developed with modern design criteria, several abnormal environment nuclear explosive safety design features have been added to enhance nuclear explosive safety. The nuclear explosive safety theme of the B53 involves energy diversion through conductive metal barriers, exclusion of electrical energy into the firing set by a strong-link switch that is enabled by a unique signal, and location of the strong-link near the weak-links. A LAC is used at the bomb/pullout cable interface to provide protection against electrical energy to the bomb that could result from lightning strikes.

DOE b(3) C

[redacted] Also, all B53s in stockpile are inherently one-point safe.

S Permissive Action Link (PAL). The B53 does not have a PAL capability.

S Command Disable (CD). The B53 does not have a CD function.

Non-DOE Components. All components of the B53 are DOE's responsibility.

DOE b(3) C

[redacted]

Shipping Configuration. The H794 Hand Truck is a caster-mounted metal truck used for shipping, storage, positioning, and maneuvering of the B53. The H794 is approximately 10 feet long and 5 feet wide and weighs approximately 1000 pounds. The bomb is held in place by two aluminum bands and longitudinal movement is resisted by a telescoping steel shear pin.

Tiedown Specification for On-Site and Off-Site Transportation of the B53

Tiedown requirements for movement of the B53 at the Pantex Plant and over-the-road were reviewed by the NESSG. Sandia National Laboratories (SNL) provides the tiedown patterns used for on-site movement of nuclear explosives at the Pantex Plant. Tiedown requirements for over-the-road are provided to Mason & Hanger-Silas Mason Co., Inc. (M&H), through the Technical Publications 45-51 series. Test data and/or analysis used by SNL to determine tiedown patterns and tiedown materials used in the tiedown of B53 are available at Organization 9613, SNL, New Mexico, have been reviewed, and meet the criteria established in Reference B for on-site transportation and Reference E for over-the-road transportation.

Chemical Compatibility

The materials compatibility program conducted tests to ascertain continued safety of all nuclear explosives when subjected to chemical interactions between materials or chemical aging throughout the stockpile life. No increased safety risks due to chemical compatibility problems have been identified. Also, the explosive compatibility program shows that there are no incompatibilities with the materials and surroundings found at the Pantex Plant and the B53 HE.

HE Aging

Selected properties of Cyclotol and Composition B have been evaluated from aged stockpile materials and local testing. There are no signs of degradation from aging or incompatibility.

One-Point and Criticality Safety

Los Alamos National Laboratory (LANL) certifies that all B53s remaining in stockpile have been individually calculated to be inherently one-point safe.

S DOE 6(3)

[redacted]

LANL also certifies criticality safety, even in abnormal environments, provided only that the primary remains intact. Also, for as many as 10 undamaged B53s, there are no criticality concerns for any spacing/arrangement.

Response to Pantex Plant Abnormal Environments

Appendix B provides information about and the response of the B53 in configurations C and D to the identified and defined abnormal-environment threats at the Pantex Plant. The nuclear explosive safety design features of the B53, the Pantex Plant facilities where the B53 will be processed, and nuclear explosive safety controls and procedures in effect at the Pantex Plant combine to result in a predictably-safe response (no worse than a one-point detonation) to all identified and defined single and multiple abnormal-environment threats at the Pantex Plant for each configuration of the B53, except for tornado. The NESSG believes that an aircraft crash could also result in an unpredictable response. An unpredictable response would require the bomb center case to be breached, a compromised firing set, an appropriate energy source, and an intact primary. It is highly unlikely that a force strong enough to breach the bomb center case would leave the main charge detonators, high explosive, and pit undamaged. Additionally, the appropriate energy would have to be applied to more than one detonator simultaneously since the B53 is inherently one-point safe. The protection provided in Zone 4 and Zone 12 structures of the Pantex Plant, the nuclear explosive safety controls and procedures in effect for all nuclear explosive operations, and the rugged construction of the hardened trailers significantly reduce the threat to nuclear explosive safety of the abnormal environments. The NESSG believes that the possibility of the tornado or aircraft crash resulting in a threat to nuclear explosive safety is remote.

Reader-Worker Procedures and Checkoff Lists

Reader-worker procedures and checkoff lists are required and in use for those B53 mechanical disassembly operations requiring person-to-person coverage.

Additional Information

Additional information about the B53 and about the operations associated with the B53 is in Appendices B, C, and D.

Issues Resolved Without a Finding

1. A PT4118 multicircuit continuity tester is used to verify the safe position of the MC2969 strong-link switch before disassembly of the nuclear

explosive. The NESSG proposed that this test be performed only once after bomb return and that the test be performed in the Zone 12 disassembly bay. This action was agreed to by M&H and SNL. It shall be implemented prior to resuming B53 disassembly operations and the applicable operating procedures shall be revised by M&H and verified by DOE/Amarillo Area Office (AAO).

2. M&H and SNL proposed delaying removal of the protective shroud over the detonator cables to reduce the vulnerability of the nuclear explosive and thus the requirements for person-to-person coverage. The NESSG agrees with this proposal. Removal of the protective shroud shall occur as late as possible in the disassembly process. This change shall be implemented prior to resuming B53 disassembly operations and the applicable operating procedures shall be revised by M&H and verified by DOE/AAO.

3. M&H proposed to stage the end cap assembly (primary) in Zone 12 prior to its disassembly operations. Staging will be accomplished in a new stand that is similar to the old stand, but with provision for a totally enclosing metal cover and protective blankets. The NESSG agrees with this proposal. After receipt of this tooling and before resumption of B53 disassembly operations, the tooling shall be reviewed by Battelle Pantex/Nuclear Explosive Safety Division (NESD) and DOE/AAO/Nuclear Explosive Safety and approved by DOE/AL/NESD. Prior to resuming B53 disassembly operations, the applicable operating procedures shall be revised by M&H and verified by DOE/AAO.

Conclusions

The NESSG concluded that References A through G are valid, appropriate, and adequate and are applicable to the studied B53 operations. The NESSG also concluded that the procedures, equipment, and administrative controls to be employed with the studied operations are not a threat to nuclear explosive safety and meet Nuclear Explosive Safety Standards a., b., c., and e. and other nuclear explosive safety criteria of DOE Order 5610.11; except that portion which has not been implemented, as specified in Appendix A; and of AL Supplemental Directive 5610.11. Nuclear Explosive Safety Standard d. is evaluated by the DOE/AL, SNSD's security surveys and DOE Headquarters' inspection and evaluations of Pantex Plant security operations.

B. DOE/AL Master Tester List (MTL)

Discussion

The following tester is needed for B53 disassembly operations at the Pantex Plant:

Tester	Category	On MTL for other Programs	Analysis in Appendix B and Reference	Needed for Operations
PT4118	Blue	Yes	---	Yes

The application of the above listed tester to the B53 was reviewed. Appendix B contains the tester safety analysis summary and tester/nuclear explosive interface analysis for the PT4118 tester.

> The PT4118 multicircuit continuity tester is a blue decal tester used on the B53 system to verify the safe position of the MC2969 strong-link switch. The PT4118 is a hand held tester using a light emitting diode (LED) to indicate the continuity of an external circuit. It derives its electrical power from an internal mechanical hand crank generator. Two independent circuits can be checked at the same time. The PT4118 contains a mechanical voltage source, dual current limiters, dual voltage limiters, and two LED current monitors to indicate an external circuit continuity for two independent circuits. The external circuit is connected in series with the voltage source, current limiters, and LED. Continuity is indicated for circuits less than 4000 ohms. The PT4118 does not contain any stored energy sources (e.g., a battery). Lab testing of the PT4118 has revealed output currents of 0.5 to 0.75 amperes through an external load of 5 ohms. This is in the form of 100 nanosecond wide pulses randomly generated during operation of the hand crank generator. This technically violates the blue decal limit of 0.1 ampere. No critical circuit hazard exists because the energy deposition resulting from the 100 nanosecond current excursions is below the no-fire level of all electro-explosive devices within the nuclear explosive stockpile.

Conclusions

The NESSG concluded that the deviations from accepted design criteria by the PT4118 tester are of no consequence. The PT4118 tester is not a threat to

nuclear explosive safety when employed in the intended application for tests on the B53.

Recommendation AL MTL

The PT4118 be listed on the AL MTL for the B53.

Action

AL

C. Safety Rules and Immediate-Action Procedures

Discussion

The NESSG evaluated the proposed specific Safety Rule and immediate-action procedures to be used for B53 operations.

Conclusions

The proposed specific Safety Rule adequately covers B53 disassembly operations.

Specific immediate-action procedures (not All Other Programs) are required for B53 disassembly operations.

Recommendations - Safety Rules and Immediate-Action Procedures

1. Approve the B53 specific Safety Rule as follows:

   Upon bomb return, before disassembly operations are performed, the MC2969 strong-link switch shall be electrically monitored to verify the safe condition of the switch.

2. Approve the immediate-action procedures for the B53 as follows:

   a. No attempt should be made to move the nuclear explosive.

   b. Turn off and disconnect all test equipment from the nuclear explosive.

   c. Further operations (including disassembly) on the nuclear explosive are specifically prohibited.

APPENDIX A

DOE ORDER 5610.11 IMPLEMENTATION

There is a portion of DOE Order 5610.11 which has not been implemented and which is applicable to the "Nuclear Explosive Safety Study of B53 Mechanical Disassembly Operations at the USDOE Pantex Plant," dated October 1, 1993. This portion is applicable to the Department of Energy Albuquerque Operations Office.

Chapter IX; Risk Assessment. This chapter requires quantitative risk assessments for all onsite operations. The risk assessment program is being implemented; however, the risk assessment for the B53 has not been started at this time.

TABLE OF CONTENTS

		Page
I.	SCOPE	3
II.	DESCRIPTIONS	3
III.	DESCRIPTION OF ELECTRICAL TESTER EQUIPMENT	12
IV.	RESPONSE TO PANTEX PLANT ABNORMAL ENVIRONMENTS	17
V.	RISK ASSESSMENT REPORT	19
VI.	SPECIFIC SAFETY RULES	19
VII.	IMMEDIATE ACTION PROCEDURES	19
VIII.	QUALITY TESTS	19
IX.	SPECIAL PROCESSES	21
X.	OTHER ISSUES	21
XI.	CONCLUSIONS	21
XII.	RECOMMENDATIONS	21
XIII.	REFERENCES	21
XIV.	APPENDICES	22
	DISTRIBUTION	40

LIST OF ILLUSTRATIONS

		Page
1.	B53-1 Bomb Exploded View	4
2.	B53-1 Interconnecting Diagram	5
3.	B53-1 Simplified Schematic	6
4.	H794 Hand Truck	13
5.	H795 Adapter Kit	13
6.	H796 Adapter Kit	14
7.	B53 on H794/795	14
8.	H794 Tiedown Pattern	15
9.	Chain Routing and Blocking Arrangement	15
10.	Fabrication of Lateral Blocking	16
11.	Installation of Lateral Blocking	16
12.	On-site Tiedowns	17

TABLES

		Page
1.	Component Explosive Content and Firing Characteristics	11
2.	B53 Single Abnormal Environment Response	18
3.	B53 Multiple Abnormal Environment Response	20

I. SCOPE

The scope of this Nuclear Explosive Safety Study is limited to those operations performed during B53-1 disassembly for removal of parent unit parts to be used during Joint Test Assembly build. These operations include on and off-site transportation of the B53-1, disassembly of the B53-1 through removal of the firing set (power pack and X-unit) from the aft cap, reconstitution of the remaining material into a BA53-like assembly, and on-site transportation of the BA53 to storage. Specifically excluded from this study is disassembly of the nuclear system.

II. DESCRIPTIONS

A. General Description of Bomb

The B53-1 is a thermonuclear device, approximately 148 inches long and 50 inches in diameter weighing approximately 8850 pounds. It consists of a nuclear system and electrical system components. The bomb provides only a laydown option and is timer armed and fired. The bomb consists of a Basic Assembly (BA) and Basic Shape Components. A view of the shape components exploded away from the Basic Assembly BA is shown in Figure 1. The BA contains the nuclear system and the electrical component assembly.

C

DOE b(3) C

DOE b(3) C

The case of the BA is an aluminum structure that consists of two 1/2-inch thick cylindrical sections, a 1/2-inch thick conical section, two end caps, and a closure plate. The complete fuzing and firing electrical component assembly is contained in the BA between the aft end cap and the closure plate.

B. Nuclear Warhead Electrical System

DOE b(3) C

MC1178 Laydown Timer -- The MC1178 includes two electric motors (SA377) for operation of two separate channels. Each motor operates two SA833 snap-action switches at each of three time intervals. The switches are wired so that fuzing channels are switched by either timer motor. Fire signal times from 30 to 240 seconds, in 30-second increments, can be set into the MC1178 with a

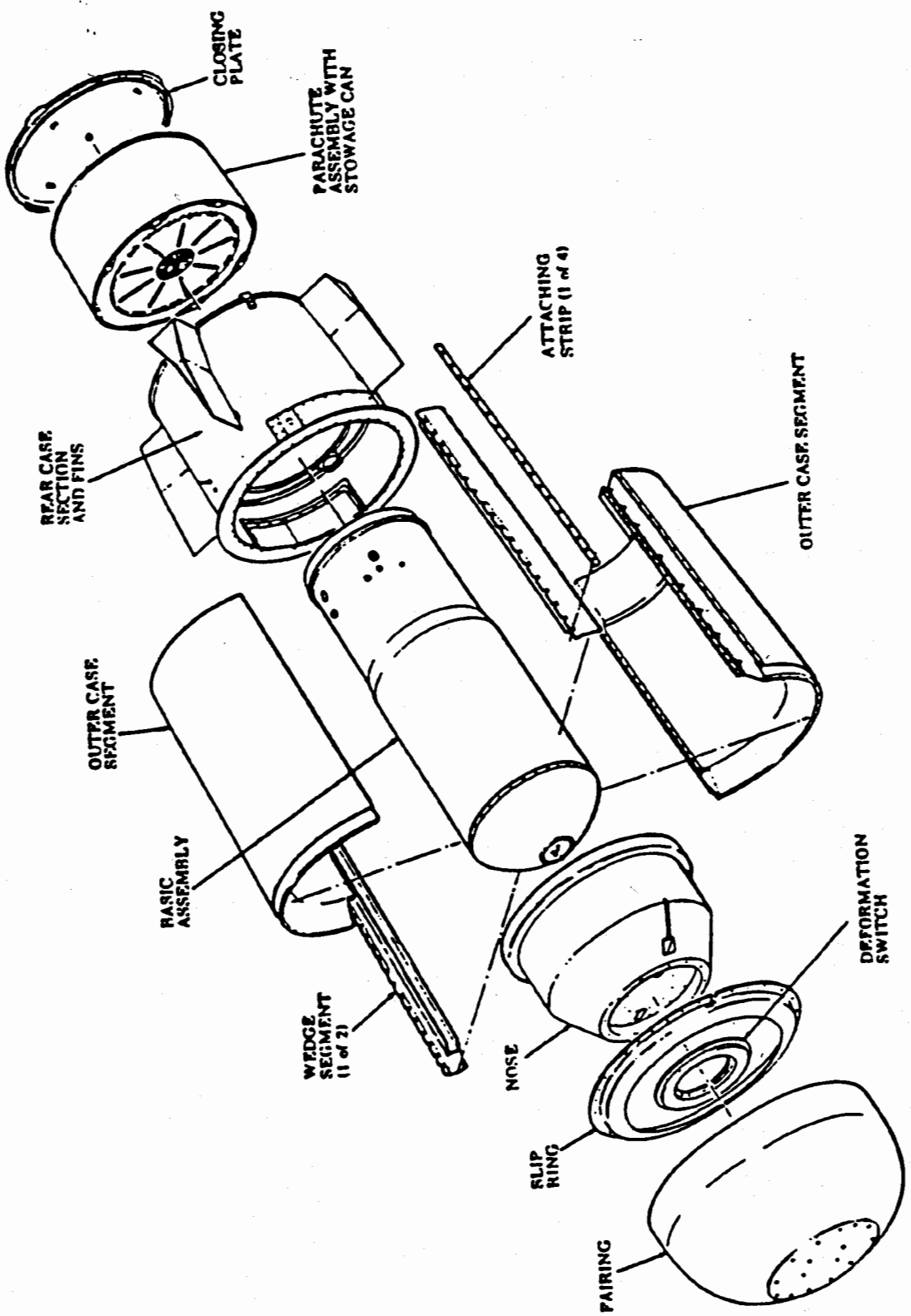

Figure 1 - B53-1 Bomb Exploded View

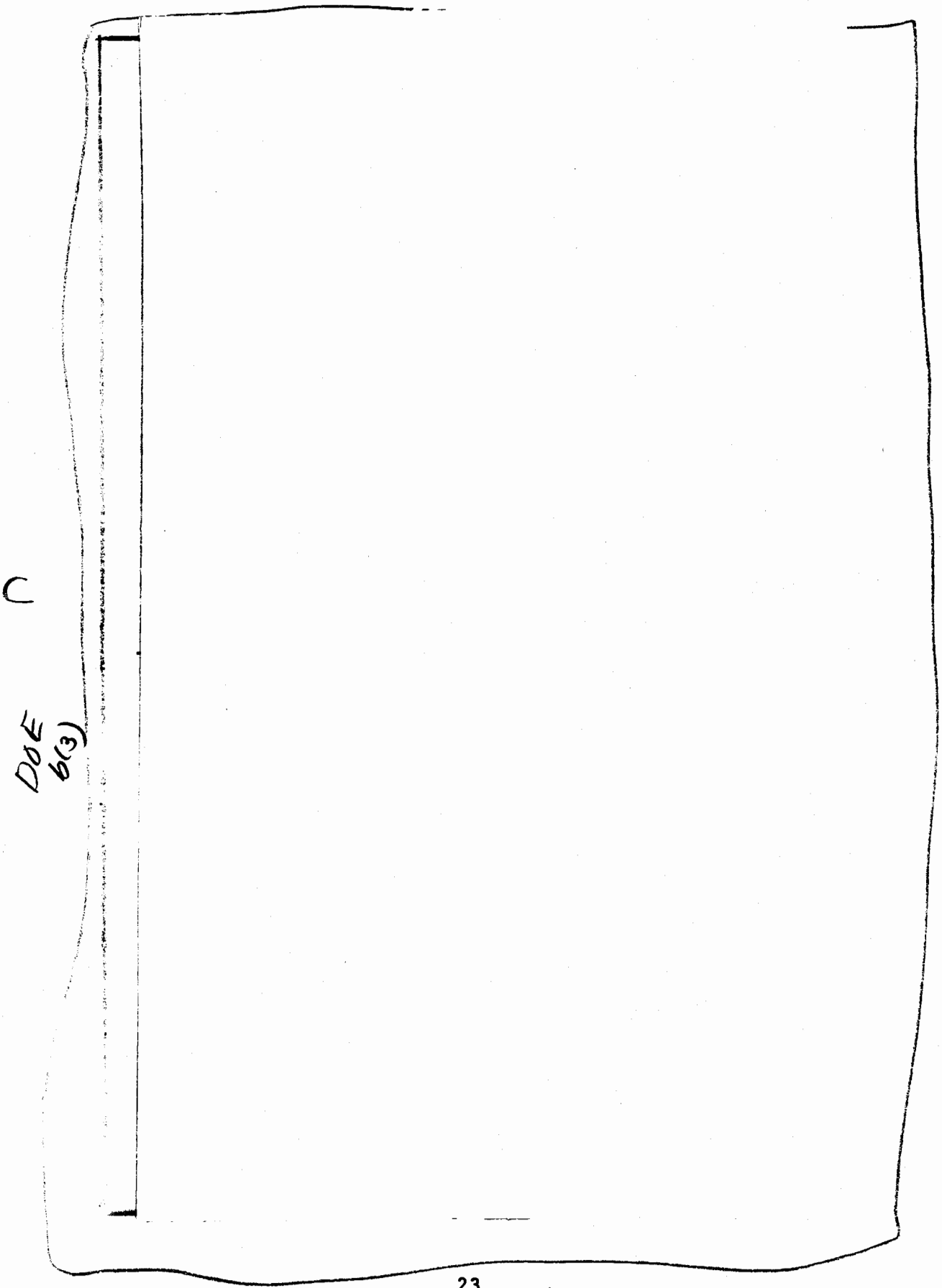

DOE
b(3)

DOE
b(3)

C

screwdriver. The setting on the timer indicates the time from extracton of the pullout rods and detonation.

MC1199 Electrical System Safing Switch -- The MC1199 is manually operated external to the weapon and provides visual indication of safe or unsafe conditions during ground handling. It has three control positions: safe, retard, and free-fall.

DOE b(3)

C

MC1204 Explosive Switch and Fuse Pack -- The MC1204 is a single package containing all of the explosive switches and electrical fuses used in the B53. It consists of four MC749 self-contained explosive switches, two SA1022 fuses, and four SA960 fuses.

MC1237 Interconnecting Box -- The MC1237 completes the circuits between the components in the main fuzing system. This interconnecting box contains no resistors but is similar in construction to the MC1203.

MC1262 Thermal Battery Packs -- Two MC1262 fast-rise thermal battery packs are used in the B53. The MC1262 is a two-section thermal battery containing a 12-volt fast-rise section and 28-volt power section. Basically, it is two batteries in a single case with a common negative terminal.

DOE b(3)

MC1264 Thermal Batteries -- Two MC1264 thermal batteries are used in the B53 to provide dual channel power for the fuzing system. The MC1264 is nominally a 28-volt battery with an activated life in excess of 240 seconds. It is activated by electrical power from the 12-volt section of the MC1262 to either of the two MC1210 electrical matches in the MC1264. The SA925 thermal monitor is incorporated into the MC1264 to provide means to determine activation status of the battery.

MC1268 Interval Timer -- The MC1268 includes two MC1269 mercury-thallium switches and two SA906 motor-driven timers.

DOE b(3)

MC4065 Power Pack -- The MC4065 contains a high voltage transverter, a trigger circuit, the neutron generator low voltage oscillator circuit and trigger attenuator, and an MC2969 Strong-Link Switch which are potted in a stainless steel housing.

DOE b(3)

MC4066 Neutron Generator -- Two MC4066 generators are used to provide external initiation of the nuclear system.

DOE b(3)

Parachute System – The parachute system includes three mild detonating fuze (MDF) systems, a 4-foot pilot chute, a 16.5-foot ribbon-type chute permanently reefed to 12 feet (retard chute), and three 48-foot ribbon-type chutes (laydown chutes), each reefed to 22.5 feet for 2 seconds after line stretch. Each parachute is packed into its deployment bag before assembly into a parachute stowage can.

The three MDF systems provide for parachute deployment, separation of the laydown extraction parachute, and release of the complete parachute system for high-altitude free-fall option (not available in B53-1).

The parachute stowage can is a honeycomb structure that provides a parachute volume of 26 cubic feet and contains two suspension line lug systems. One of the lug systems is used to attach the laydown chutes and to provide a load-carrying path to the rear case section. The other lug system is used to attach the retard chute. It contains a cutting anvil to be used, in conjunction with the MC1581 shaped charge mild detonating fuze system (flexible linear-shaped charge) in the rear case section, to cut the retard chute suspension lines in the laydown option. Thus, the retard chute deploys the laydown chute.

C. Nuclear Explosive Safety Theme

The safety theme of the B53-1 includes energy diversion through conductive metal barriers, protection of entry into the exclusion region by a strong-link switch that is enabled by a unique signal, and weak-link/strong-link collocation.

C
DOE b(3)

DOE b(3) S

- All remaining B53-1 pits in stockpile have been individually calculated to be inherently one-point safe.
- The design approach to provide isolation of critical circuits from sources of electrical energy in abnormal environments is to enclose those critical elements with an exclusion region. The entry of electrical energy into this region is through an MC2969 Strong-Link Switch that is enabled only by receipt of a unique signal. The unique signal is generated external to the bomb such that transmission of the unique signal indicates the intent to arm the B53-1.
- A Lightning Arrestor Connector is utilized at the bomb/pullout cable interface to provide protection against inputs to the bomb that could result from lightning strikes.

DOE b(3)
C

TABLE 1 - Component Explosive Content and Firing Characteristics

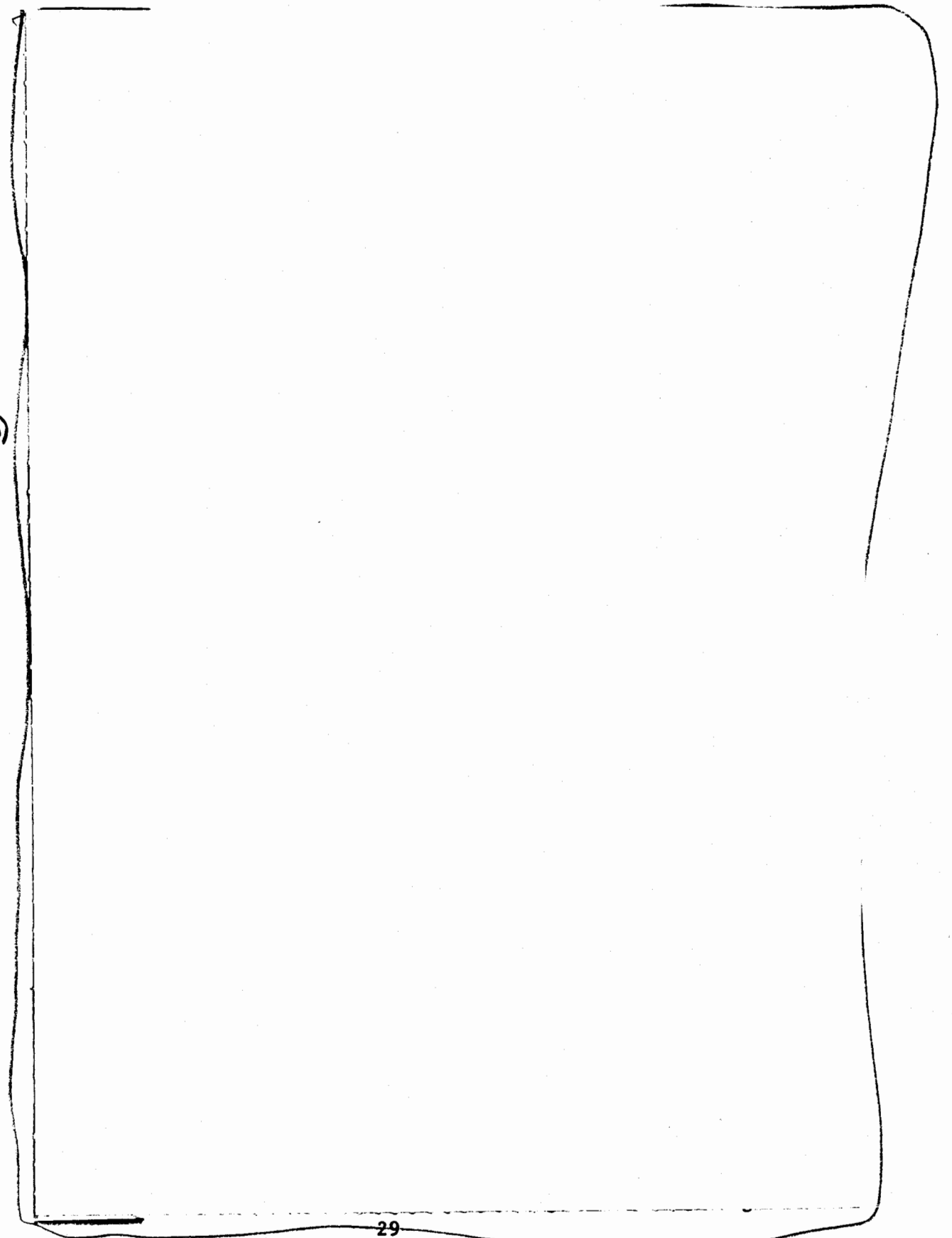

DOE b(3)

C

H. Shipping Configurations

Two shipping configurations exist during the activities addressed in this study. Both configurations utilize the H794 Hand Truck which is a caster-mounted metal truck used for shipping, storage, positioning and maneuvering of the B53 (see Figure 4). The H794 is approximately 10 feet long and 5 feet wide and weights approximately 1000 pounds. Pior to disassembly, the bomb is handled/transported and following disassembly, the basic assembly is handled/transported. When the bomb is being handled, the H795 Adapter Kit is used to adapt the B53 to the H794 (see Figure 5). The bomb is held in place by the two aluminum bands and longitudinal movement is resisted by a telescoping steel shear pin. When the BA53 is being handled, the H796 Adapter Kit is used to adapt the BA53 to the H794 (see Figure 6). The basic assembly is held in place by the two aluminum bands and longitudinal movement is resisted by a fixed steel shear pin. Figure 7 depicts the B53 installed in the H794/795.

I. Tie-down Specification

Figures 8 through 11 shows the over-the-road tiedowns and Figure 12 shows the on-site tiedowns. The on-site tiedowns for the B53 and BA53 are identical. The over-the-road configuration was successfully tested and the on-site configurations were evaluated and found satisfactory (Appendix A). These data are on file in Division 9613.

J. Permissive Action Link

S The B53-1 does not utilize a Permissive Action Link.

K. Command Disable

S The B53-1 does not have a Command Disable feature.

III. DESCRIPTION OF ELECTRICAL TEST EQUIPMENT

The only electrical test performed on the nuclear explosive is verification of the status of the MC2969 strong-link switch. A detailed analysis of the tester used is included in Appendix C.

PT4118 Multicircuit Continuity Tester

Description - A manually operated, multiple-purpose continuity test set used with the CB2297.

Tester Analysis Summary - Lab testing of the PT4118 has revealed output currents of 0.5 to 0.75 amperes through an external load of 5 ohms. This is in the form of 100 nanosecond wide pulses randomly generated during operation of the hand crank generator. This does violate the blue label limit of 0.1 ampere. The energy deposition by these 100 nanosecond.excursions is not sufficient to initiate the explosive devices within the B53-1.

Tester/Weapon Interface Analysis - No Critical Circuit Hazard exists because the energy deposition resulting from the 100 nanosecond high current excursions is below the no-fire level of all electro-explosive devices within the B53-1.

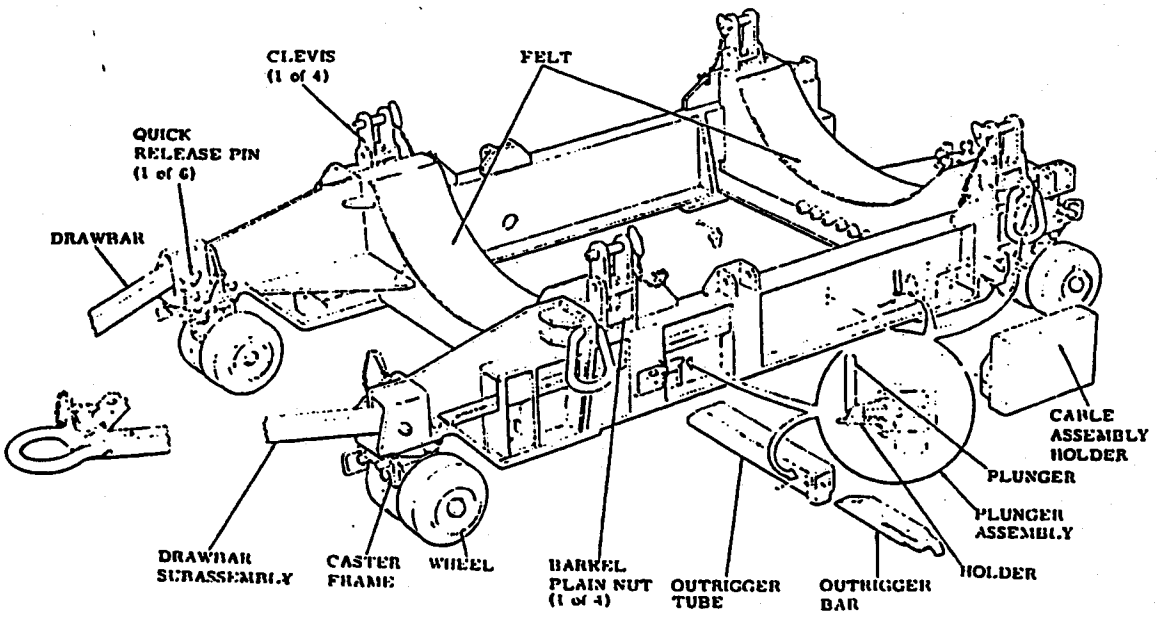

Figure 4 - H794 Hand Truck

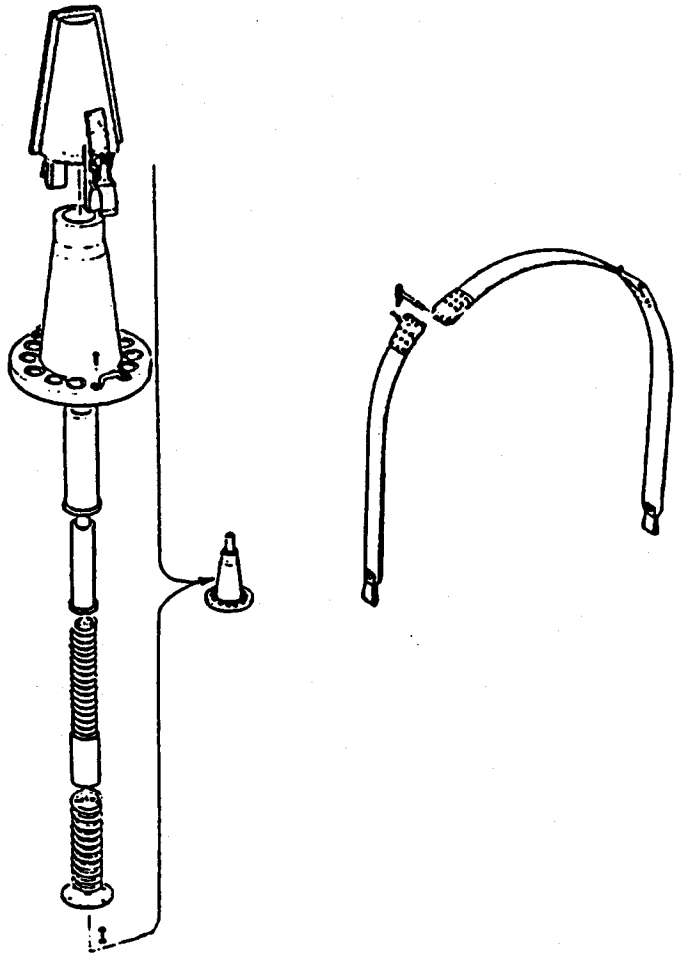

Figure 5 - H795 Adapter Kit

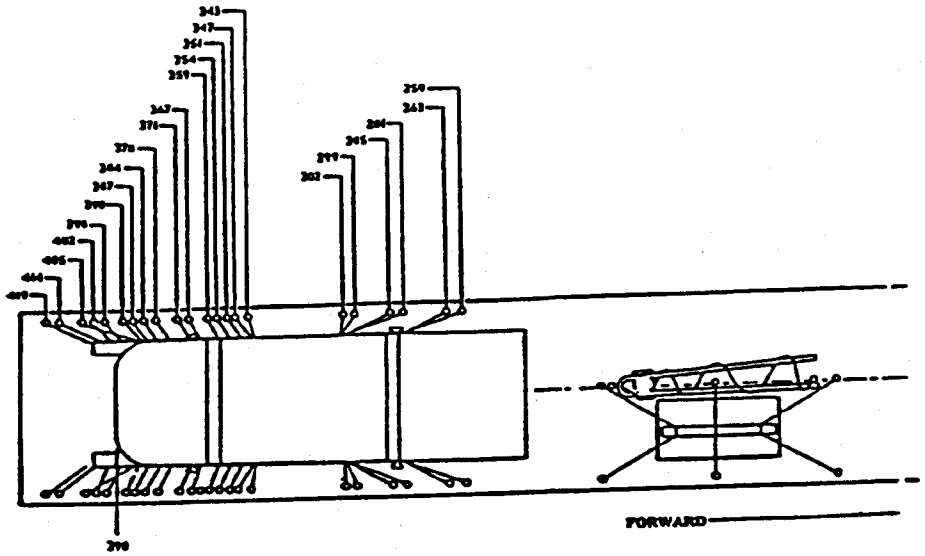

Figure 8 - H794 Tiedown Pattern

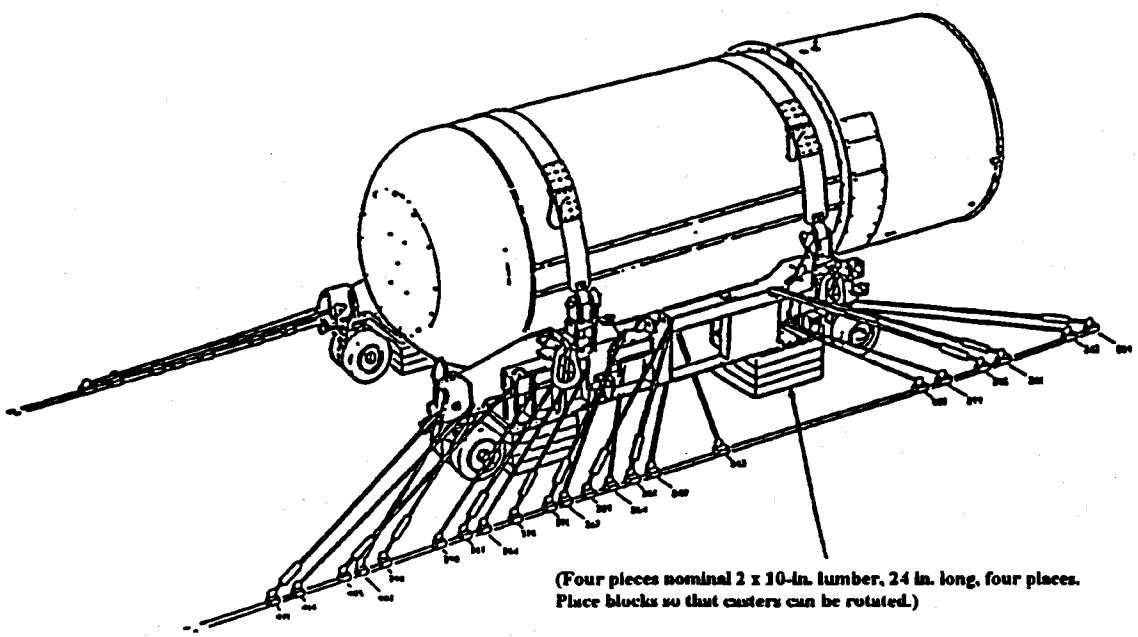

Figure 9 - Chain Routing and Blocking Arrangement

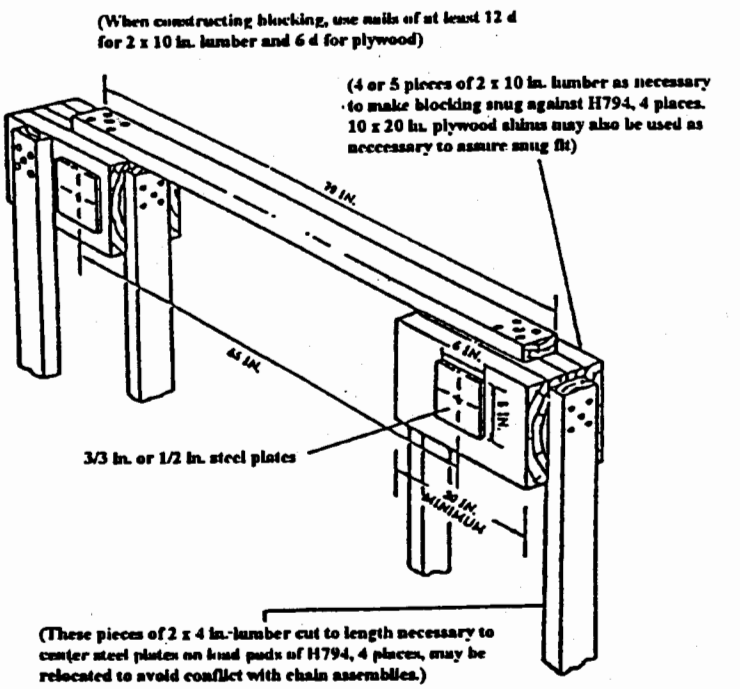

Figure 10 - Fabrication of Lateral Blocking

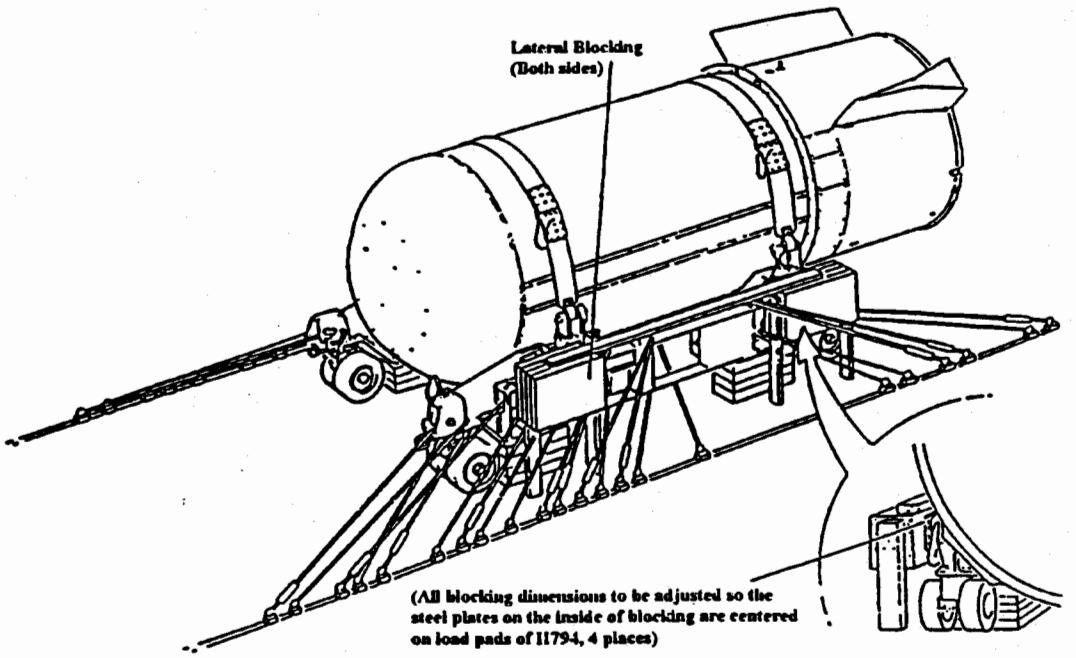

Figure 11 - Installation of Lateral Blocking

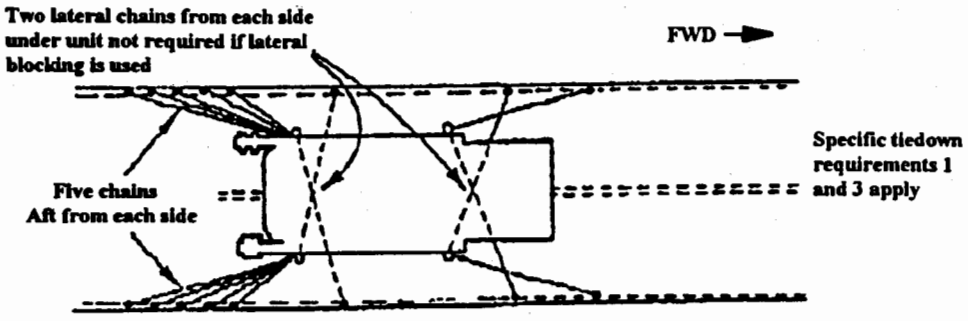

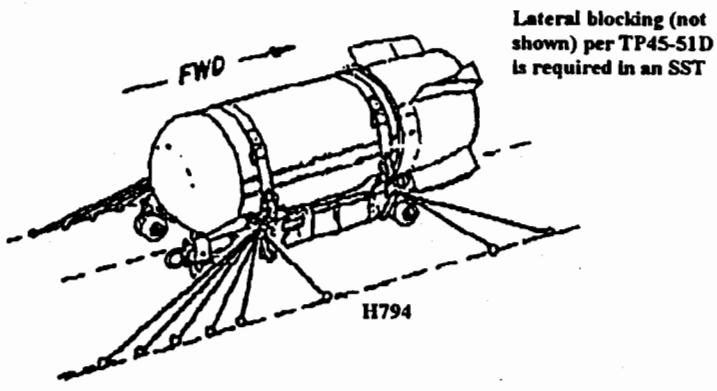

Figure 12 - On-site Tiedowns

IV. RESPONSE TO PANTEX PLANT ABNORMAL ENVIRONMENTS

A. Configurations/Facilities

Reference 2 was used to determine which abnormal environments are relevant to this B53-1 study. Through interpretation of the reference, Facility Categories II, IV, VI, VII, and VIII (12-104 Bays, Zone 12 Interconnecting Ramps and Passageways, Staging Igloos, Transport Operations, and Loading Operations) represent the possible facilities and sites that the B53-1 will encounter. The B53-1 will be Configuration C (Cased HE/Pit assembly but short of UU package configuration) and Configuration D (UU package configuration).

1. Single Abnormal Environments

The single abnormal environment responses are provided in Table 2. The table combines the five facility categories (not all environments are applicable in each facility), and considers two versions of Configuration C (the Aft Cap Assembly removed from the BA53 and the BA53 less fuzing and firing components).

Table 2 - B53 Single Abnormal Environment Response

Abnormal Environment	Configuration C	Configuration D	Rationale
Thermal			
Fire	P	P	HE will burn, confinement can lead to one-point detonation; one-point safe. If firing set present, strong-link/weak-link collocation provides assurance that firing set will not initiate detonators.
Cold	P	P	No unsafe condition postulated.
Heat	P	P	No unsafe condition postulated unless temperature reaches HE reaction temperature.
Electrical			
AC & DC	P	P	Cannot initiate exploding bridgewire detonators. If firing set present, strong-link interrupts all lines into exclusion region. Exclusion region protected by steel barrier.
EMR	P	P	Cannot initiate exploding bridgewire detonators. If firing set present, strong-link interrupts all lines into exclusion region. Exclusion region protected by steel barrier.
LIEMP	P	P	UU package protected by LAC. No testers used during disassembly.
Static Charge	P	P	Cannot initiate exploding bridgewire detonators. If firing set present, strong-link interrupts all lines into exclusion region. Exclusion region protected by steel barrier.
Chemical			
Water	P	P	Criticality becomes an issue during extreme accidents involving water flooding inside the pit. Prompt recovery (i.e., few days or less) from a water environment precludes any credible criticality concerns. If uranium is in contact with water for more than a few days them some corrosion will have begun. [redacted] C DOE b(3)
Processing Chemicals	P	P	No unsafe condition postulated.
Mechanical			
Impact	P	P	If firing set installed, strong-link continues to provide electrical isolation. HE is susceptible to one-point detonation. One-point safe.
Puncture	P	P	Objects penetrating basic assembly, causing actuation of the thermal batteries and bypassing the strong-link without the same or similar objects disabling critical elements is vanishingly small. HE is susceptible to one-point detonation. One-point safe.
Blast	P	P	HE is susceptible to one-point detonation. One-point safe.
Fragments	P	P	Objects penetrating basic assembly, causing actuation of the thermal batteries and bypassing the strong-link without the same or similar objects disabling critical elements is vanishingly small. HE is susceptible to one-point detonation. One-point safe.

Key: P - Predictable response.

2. Multiple Abnormal Environments

The B53-1 has no assured level of nuclear safety in a broad range of multiple abnormal environments as summarized in Table 3. The table combines the five facility categories and two versions of Configuration C as discussed for the single abnormal environments.

V. RISK ASSESSMENT REPORT

Not applicable for the B53-1.

VI. SPECIFIC SAFETY RULES

The following Specific Safety Rules currently exist for the B53-1 Bomb:

a. Upon bomb return and before disassembly operations are performed, the MC2969 strong-link switch shall be electrically monitored to verify the safe condition of the switch.

b. The thermal batteries shall not be electrically disconnected from the electrical component assembly interconnecting box in the critical assembly area.

c. In the NEA, the cover shall not be removed from the J7 connector on the MC4065 power pack.

Rules "b" and "c" should be deleted. Rule "b" does not contribute to the nuclear safety of the B53-1. In fact, removal of the thermal batteries enhances nuclear safety. It is our understanding that rule "b" exists only for the purpose of providing administrative control of power sources in the NEA. Positive control of the batteries would be accomplished by removing them from the NEA and taking them to the JTA assembly staging area. Rule "c" is unnecessary because analysis has shown that the weapon cannot be functioned by applying power to the MC4065J7 telemetry connector.

VII. IMMEDIATE ACTION PROCEDURES

The current immediate action procedures are those that are specified for most weapon programs:

(1) No attempt should be made to move the nuclear explosive.

(2) Turn off and disconnect all test equipment from the nuclear explosive.

(3) Further operations (including disassembly) on the nuclear explosive are specifically prohibited.

(4) Immediately notify the responsible M&H-SM assembly engineer.

These procedures appear adequate.

VIII. QUALITY TESTS

The only quality test performed during disassembly of the B53-1 for application in the Joint Flight Test Program is atmosphere analysis which includes checking for the presence of Tritium.

XIV. APPENDICES

A. -- Analysis of MC4065-J7 Telemetry Connector

B. -- B53-1 Transportation Tiedowns

C. -- Tester Analysis

APPENDIX A

Analysis of MC4065-J7 Telemetry Connector

Sandia National Laboratories

Albuquerque, New Mexico 87185

date: August 2, 1993

to: J. S. Clabaugh, 5115

Dave Pierce

from: D. M. Pierce

subject: B53 Investigation of JTA Connector J7 Inputs

The MC4065 Power Pack for the B53 SIP has a JTA connector(J7) which is connected into the exclusion region. See enclosure 1. All pin connections have an isolation resistor except the ground return. The resistors are one (1) watt fixed wire wound construction. The failure mode, when over-power is to fuse open and stay open circuited. The following current/voltage/power would have to be applied to arm and fire the power pack X-unit or charge the output capacitor through the bleeder/divider network:

Function	Current-Amps	Voltage-Volts	Power-Watts
A1/B1	0.221	2,238	495
A2/B2-Peak	3.2	32,028	102,489
A2/B2-Steady State	0.225	2,318	502
A3/B3	0.032	330	10.5
TM Bleeder/Divider	0.029	146,760	31.5

As can be seen from the above table, the one watt input resistors would burn open and the circuit would be unable to supply current for arming and firing functions.

If you have further questions please call me on extension 5-8317.

DMP:2571

Copy/Enclosures to:
2571 W. C. Curtis
2571 T. J. Williams
2571 D. M. Pierce

APPENDIX B

B53-1 Transportation Tiedowns

Sandia National Laboratories
Albuquerque, New Mexico 87185

date: August 17, 1993

to: J. S. Claybaugh, 5115

from: H. E. Morse, 9613

subject: B53 Nuclear Explosive Study

The B53 Tiedown Configuration specified in TP45-51D (SST over the road) was successfully tested.

The on-site tiedown was evaluated and found to be acceptable. The BA53 on-site tiedown is also acceptable.

HEM:9613:aw

Copy to:

9613	J. J. Roesch
9613	File, Tie-downs
9613	H. E. Morse

APPENDIX C

Tester Analysis

hand crank generator. The energy in these pulses is extremely small and is calculated to be 2.8 ergs. (An electro-explosive detonator normally requires tens of thousands of ergs to operate.)

WORST CASE FAILURE ANALYSIS

The PT4118 is housed in an aluminum enclosure which does provide complete mechanical protection. No internal failures due to crush could go unnoticed by the operator; (Use is not allowed if the enclosure has been crushed.)

Except for the LED assemblies and generator, all components are part of the printed wiring assembly (PWA) which encloses the output connector. The PWA is sandwiched between a phenolic insulator and an aluminum cover to prevent accidental bypass.

The failure of a single component will not result in a voltage greater than 36 volts or a current greater than 100 milliamperes through an external load. The following scenarios were analyzed:

(The presents of the high current pulses detected during lab testing are not part of the following analysis, but must be used when making a final determination of the tester's performance.)

COMPONENT	*FAILURE MODE*	*OUTPUT*	*NOTE*
CR1	OPEN	36 VOLTS	
CR2	OPEN	30 VOLTS	
R1	OPEN	0 VOLTS	1
R1	SHORTED	70 ma	2
R2	OPEN	0 VOLTS	1
R2	SHORTED	70 ma	2
DS1	OPEN	30 VOLTS	3
DS1	SHORTED	30 VOLTS	3
DS2	OPEN	30 VOLTS	3
DS2	SHORTED	30 VOLTS	3
D1	OPEN	0 VOLTS	1
D1	SHORTED	30V/.75V	4

Notes:

1. Open circuit, no output to external load.
2. Current level for dual circuit monitoring. 35 ma peak for single circuit.
3. LED will not function for that circuit. (A shorting plug is provided to ascertain LED performance prior and post test.)
4. With a counter clockwise turn on the generator, peak output is 30 volts. With a clockwise turn on the generator, peak output is 0.75 volts.

DG10001 COMPARISON

1. The PT4118 meets the appropriate requirements of DG10001 issue M for the following paragraphs:

   - 3.3 a; Is independent of the safety features within the NE and will operate safely for all normal and credible abnormal environments.

   - 3.3 b; The PT4118 design does meet the overall design requirements of the NE.

- 3.3 d; Will prevent catastrophic failure because of the incorporation safety features such as:. strong outer case, PWA protected from shorting
- 3.3 e; No high energy sources or AC power is used
- 3.3 f; The PT4118 is housed in a rugged aluminum enclosure providing sufficient protection against crush and the like.
- 3.3 g; No batteries are used.
- 3.3 h; Safe operation is independent of tester orientation.
- 3.4 a; An internal hand crank generator supplies power to the PT4118. Barriers are not provided around the generator because power is available only when a mechanical (rotating) force is applied by the operator. This would not be available to any extent during an abnormal environment such as a crush. Adding barriers would not raise the level of safety.
- 3.4 b; The location and insulation, and mounting of current limiters are clearly shown on the applicable drawing.
- 3.5 a; The complexity of the NET has been minimized
- 3.5 b; No capacitors or inductors, which could store energy, are used.
- 3.5 c; Dual current limiters are used but they are of the same type. The resistors used for current limiters are wire wound. The fail mode for this type of resistor is open which will result in an interruption of the flow of current to the load resulting in a safe condition.
- 3.5 d; The maximum current available during a single component failure will not exceed 100 ma with two circuits in use.
- 3.5 e; No positive feature is included on the tester to prevent current from flowing through interconnecting cables while they are being connected to or disconnected from the NE. Although, because the operator must provide a physical input to the hand crank generator, it would be physically impossible for the operator to do both, crank generator and operate a connector.
- 3.5 f; Interconnecting cable contains only wires to those circuits to be tested.
- 3.5 g; The connectors used on the tester and interconnecting cable provide positive mechanical locking features to prevent accidental disconnection.
- 3.5 h; Power is only available while the generator is receiving a mechanical input.
- 3.5 k; The circuits being evaluated in the NE are nonnative and therefore cannot provide an added voltage or current not provided by the tester.

2. The requirements in DG10001 issue M that PT4118 does not meet to the letter are met in other ways they are:

f. **Nuclear Explosive Tester Oversight Group (NETOG):** A Sandia group charged with the life cycle design stewardship of testers to be used with nuclear explosives.

g. **Tester Abnormal Environment:** An environment in which a tester experiences voltages, currents, energy, forces, etc., that are outside the range of acceptable, expected levels specified by the design or project group.

h. **Tester Catastrophic Failure:** A NET is said to undergo a catastrophic failure if a fault or faults occur for any reason that cause the tester's output(s) to exceed the normal output(s) as specified by the design or project group responsible for the NET. This may include (1) single faults that occur in one component and are non-propagating, or (2) multiple faults that occur in parallel due to a common cause, or (3) dependent failures due to propagation of a single fault.

2. DOCUMENTS.

a. **DOE Order 5610.11:** Program to Prevent Accidental of Unauthorized Nuclear Explosive Detonations

b. **EP401045:** Engineering Procedure, Definition of Computer Software Configuration Items

c. **EP401075:** Engineering Procedure, Electrical Testers For Use With Nuclear Explosives

d. **SAND85-2344:** Sandia Software Guidelines, Volume 1: Software Quality Planning

e. **SAND85-2345:** Sandia Software Guidelines, Volume 2: Documentation

f. **SAND85-2346:** Sandia Software Guidelines, Volume 3: Standards, Practices, and Conventions

g. **SAND85-2347:** Sandia Software Guidelines, Volume 4: Configuration Management

h. **SAND85-2348:** Sandia Software Guidelines, Volume 5: Tools, Techniques, and Methodologies

i. **SAND88-2955:** Guidelines for Software Security, (SFRD)

3. SAFETY DESIGN CRITERIA.

3.1 Safety Design Theme. A NET must not present a threat to nuclear explosive safety. A NET shall have a nuclear explosive safety design theme that is easily analyzed. Designers should use a "maximum-consequence" evaluation methodology, i.e., the worst case consequences of credible abnormal environments considering the energy sources, circuit design and the physical configuration of the tester.

3.2 Goal. Components, devices and circuits associated with safety features should fail in a safe manner.

3.3 General. Nuclear Explosive Testers should meet the following.

a. The design of the tester shall be independent of the safety features within a nuclear explosive and the tester shall operate safely for all normal and credible abnormal environments.

b. Design and evaluation of the tester must consider the overall design of the nuclear explosive under consideration. The existence and location of energy storage devices in the nuclear explosive shall receive careful consideration.

c. The lowest values of current and voltage that will adequately perform the function shall be used.

d. A NET shall incorporate safety features that will prevent catastrophic failure.

e. A NET requiring high energy power supplies, or a power source from any AC grid should be electrically and physically separated from the portion of the tester that connects to the nuclear explosive, see Figures 1 and 2.

f. Barriers or compartments may be used to simplify the analysis of the NET.

g. NETs with non-removable batteries requiring recharging shall have an interlock preventing the equipment from connecting to the nuclear explosive during battery charging.

h. Safe operation of the NET shall be independent of tester orientation. Tilting or rotation of a tester while in operation will have predictably-safe results.

3.4 Isolation. Nuclear Explosive Testers should meet the following.

a. Power sources should be located in a compartment(s) separate from other circuitry so that breakdown, improper use, or catastrophic failure will not deliver unintended power to the nuclear explosive.

k. Consideration should be given to voltages and currents reflected back to the tester from the nuclear explosive due to unexpected loads or internal generators. Under these conditions the tester must not apply excessive voltage and/or current to the nuclear explosive.

4. OTHER DESIGN CONSIDERATIONS.

4.1 National Electric Code. A NET must conform to applicable provisions of the National Electrical Code.

4.2 Electrostatic Discharge (ESD). For purposes of ESD protection, a connection on the tester should be provided for proper bonding.

4.3 Grounding. A NET should be designed so that no external earth ground connection is required.

5. NUCLEAR EXPLOSIVE TESTER SOFTWARE.

5.1 Development. Software development for NETs shall use proper software engineering techniques. These techniques are described in a five volume document "Sandia Software Guidelines" (SAND85-2344 thru SAND85-2348). The software shall be documented as required by Sandia EP401045 "Definition of Computer Software Configuration Items."

5.2 Safety Critical Software. Software designated as critical by the NESC review (EP401075), shall meet the following criteria.

a. Nuclear Explosive Safety Critical software should be developed in accordance with "Guidelines for Software Security," SAND88-2955 (classified SFRD).

b. The NESC software platform shall be reviewed by the NETOG and approved by the Nuclear Safety Department in accordance with EP401075.

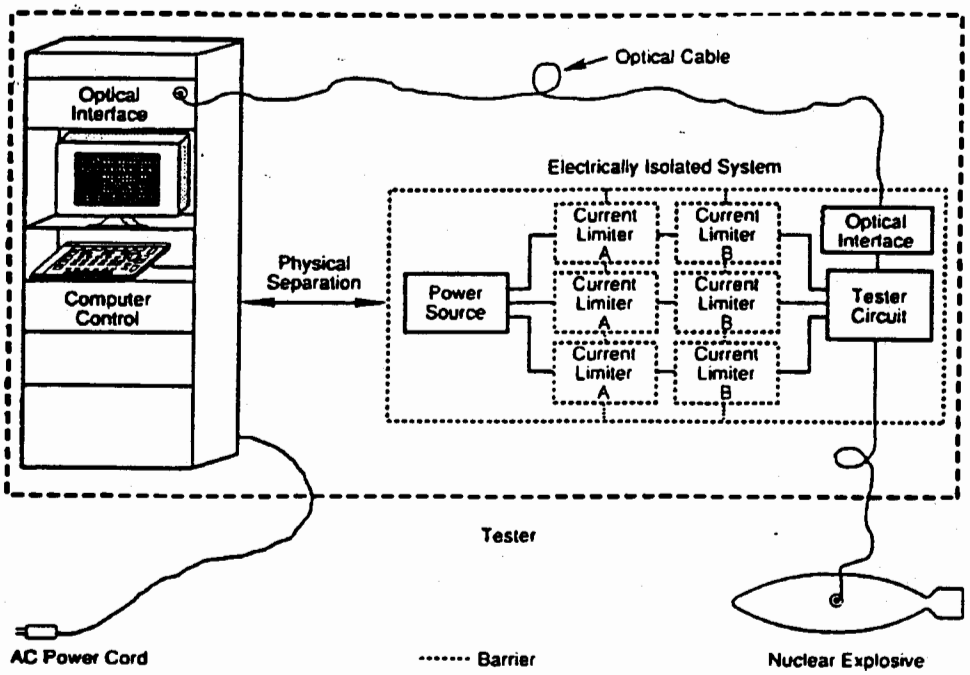

Figure 1. Possible configuration using optical isolation.

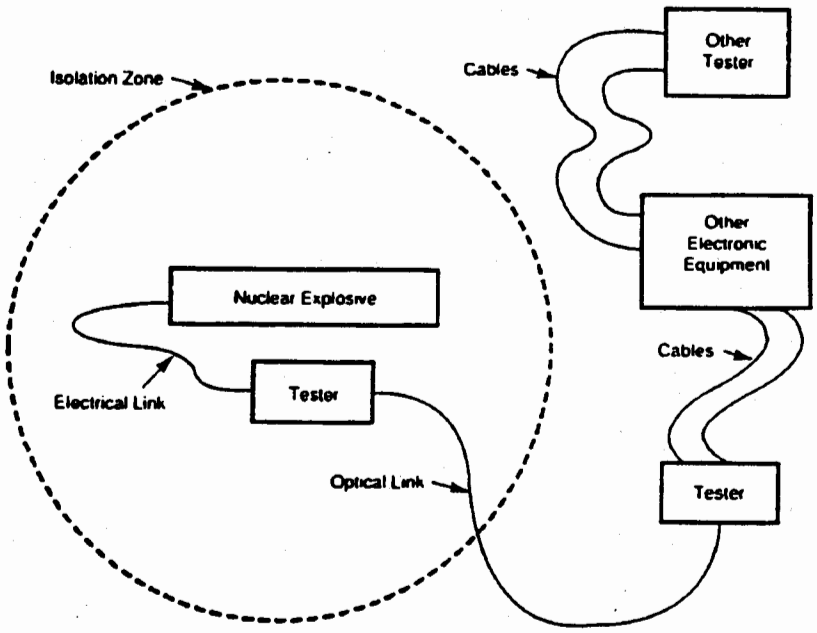

Figure 2. Isolate the tester and nuclear explosive from all electrical equipment and conductors except those that meet DG10001 standards.

SECRET

Sandia National Laboratories
Albuquerque, New Mexico 87185

date: October 4, 1993

to: F. W. Rider, DOE/AL/WSSB/NESD

J S Clabaugh

from: J. S. Clabaugh, 5115

subject: B53-1 Safety Study

Ref: SRD Document; dtd 8/25/94; subject: Input to the B53-1 Nuclear Explosive Safety Study at the Pantex Plant (U)

Two areas which were addressed at the subject safety study were not included in the referenced document.

1. Pantex personnel presented a proposal to stage the Aft Cap assembly in Zone 12 until nuclear system disassembly is approved rather than reassembling the Aft Cap assembly into a Basic Assembly and storing the Basic Assembly in Zone 4. The proposal included staging the Aft Cap assembly in building 12-64 which was not addressed under abnormal environments in the reference. Building 12-64 is in the same category as building 12-104 (Category II) and the abnormal responses provided in the reference are unchanged.

2. Additional information on over-the-road tiedowns was provided at the study. This information consisted of data from actual testing. Figures 1 and 2 show the test setup and figure 3 shows that the weapon yielded rather than the H-gear. Table 1 is the load cell data obtained until unit failure.

Copy to:
5115 J. O. Harrison

SECRET

WX-1-E-93-410S

August 27, 1993

Los Alamos
NATIONAL LABORATORY

Weapon Engineering
WX-1, MS C936
Los Alamos, New Mexico 87545
(505)667-6300
FAX (505)667-5121

LOS ALAMOS SOURCE DATA FOR B53 MOD 1

NUCLEAR EXPLOSIVE SAFETY STUDY (U)

BY:

E. D. Aragon, Jr.
B53 Project Leader
GROUP WX-1

Prepared for the DOE/AL B53 NESS to be held at
the Pantex Plant on September 28, 1993

EDA:pam
Distribution:
A. A. Nichols, Attn: F. W. Rider, DOE/AL
D. E. Zimmerman, DP-20.1, DOE/HQ,
E. R. Hanson, DOE/NV
L. J. Thompson, DOE/AAO
T. J. Morris, Battelle/Pantex Plant
J. E. Fullerton, M&H 12-107, Pantex (8 copies)
T. K. Devlin, L-125, LLNL
R. L. Samuelson, L057, DOE/SAN, c/o LLNL
S. D. Spray, Org. 331, SNLA
J. Harrison, Org. 5115, SNLA
J. L. Bellows, DOE/LAAO, MS A316
CRM-4, MS A150
J. M. Holt, Jr., NWT/NWP, MS F630
T. P. McLaughlin, HS-6, MS F691
R. D. Johnson, X-4, MS F664
B. P. Ginsberg, M-7, MS P952
J. J. Ruminer/H. L. Flaugh, WX-DO, MS P945
L. M. Kelly, WX-DO, MS P945
T. D. Robinson, WX-5, MS G780
D. L. Jaeger, WX-1, MS C936
W. J. Higgins, WX-1, MS C936
E. D. Aragon, Jr, WX-1, MS C936
WX-1 File Cy: Vault - B53, I 18

RESTRICTED DATA
This document contains Restricted Data as defined in the Atomic Energy Act of 1954. Unauthorized disclosure subject to Administrative and Criminal Sanctions.

TABLE OF CONTENTS

	Page
Title and Distribution	1
I. APPLICATION AND GENERAL DESCRIPTION	5
II. NUCLEAR SYSTEM DESCRIPTION	5
Primary	8
HE Assembly	8
Gas Boosting System	11
One-Point Safety	13
Secondary	13
III. HIGH EXPLOSIVES SAFETY	14
HE Degradation	20
Material Compatibility	23
Stockpile Evaluation	23
Detonators	24
Valve Safety	24
Actuator ESD Sensitivity	24

SECRET

TABLE OF CONTENTS (Cont.)

	Page
IV. CRITICALITY SAFETY	26
Single Units	26
Type 76 Pit	26
[redacted]	27
Arrays/Multiple Units	27
V. NUCLEAR EXPLOSIVE SAFETY ORDERS AND SUPPLEMENTAL DIRECTIVE	30
References	31

DOE b(3)

SECRET

LIST OF ILLUSTRATIONS

Figure — Page

1. B53 Mod 1 Bomb 6
2. [redacted] 9
3. Type 76 Pit 10
4. Type 2A Reservoir 12
5. Skid Test 15
6. Pin-Drip (Spigot) Test Assembly 17
7. Spigot Test Assembly 18
8. Susan Test 21
9. Susan Test Results 22
10. IE26 Detonator 25
11. Critical Volumes of spheres 28
12. Critical Mass vs ^{235}U 29

Table

1. Hazardous Materials List 7
2. B53 Warhead High Explosives 14
3. Skid Test Data 16
4. Spigot Test Data 19

DOE (b)(3)

I. APPLICATION AND GENERAL DESCRIPTION

The B53 was also fielded as a basic assembly (BA53Y1) for the B-58 pod application.

The bomb does not incorporate Insensitive High Explosive (IHE) or a Command Disablement system.[1]

The B53 physical characteristics are listed below:

Weight:	8890 lb
Length:	144.6 in.
Maximum Diameter:	50 in.

II. NUCLEAR SYSTEM DESCRIPTION

The "basic assembly" includes the nuclear system and the weapon electrical system (WES), designed by Sandia National Laboratories (SNL).

A cut-away of the B53 is shown in Figure 1. Hazardous materials contained in the physics package are listed in Table 1.

Fig. 1 - B53 Mod 1 Bomb

SECRET

DOE h(3)

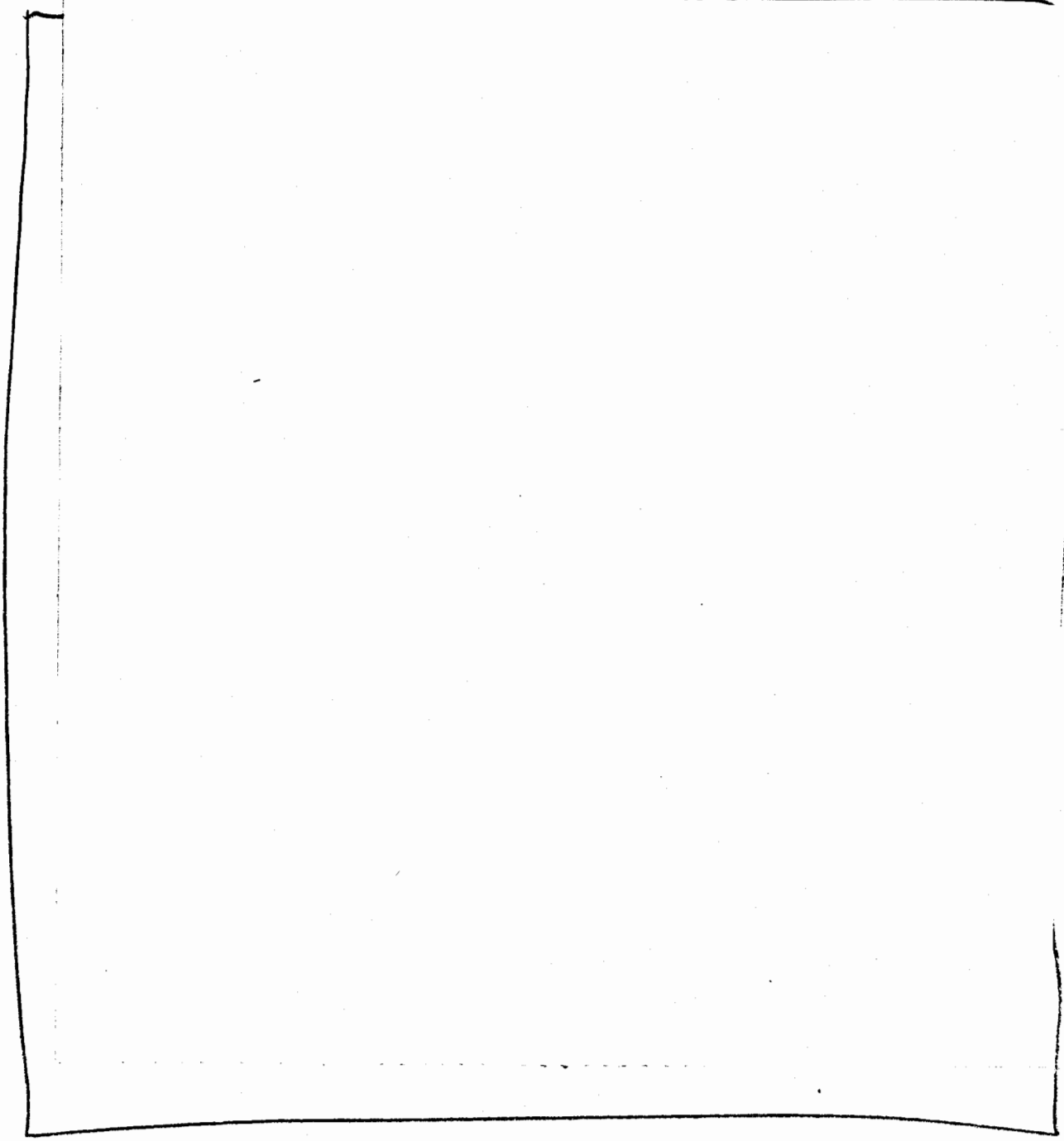

SECRET

All WES and bomb components external to the nuclear system are the responsibility of SNL and will be covered in the SNL complimentary input document to this NESS.

DOE b(3)

The Alt was performed by DoD teams [illegible].

Nuclear System Basic Components and LANL Darwing Numbers

Basic Schematic	18Y-64117

DOE b(3)

Primary

High Explosive Assembly

DOE b(3)

DOE b(3)

SECRET

DOE (b3)

SECRET

Gas Boost System

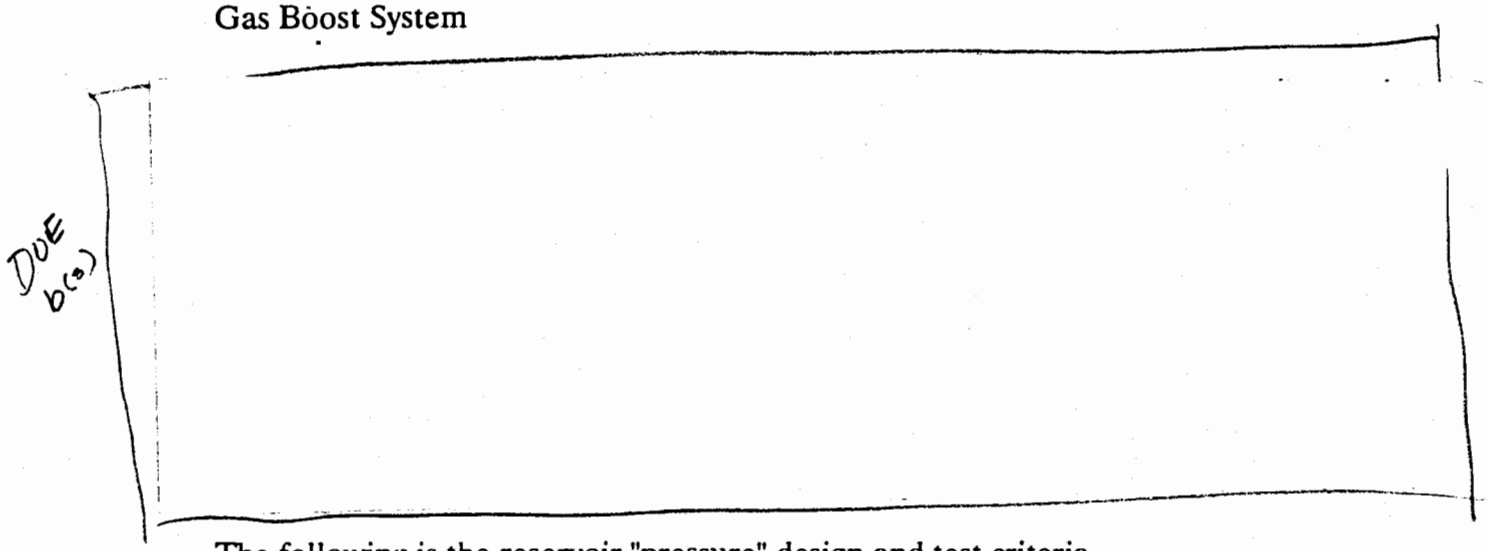

The following is the reservoir "pressure" design and test criteria.

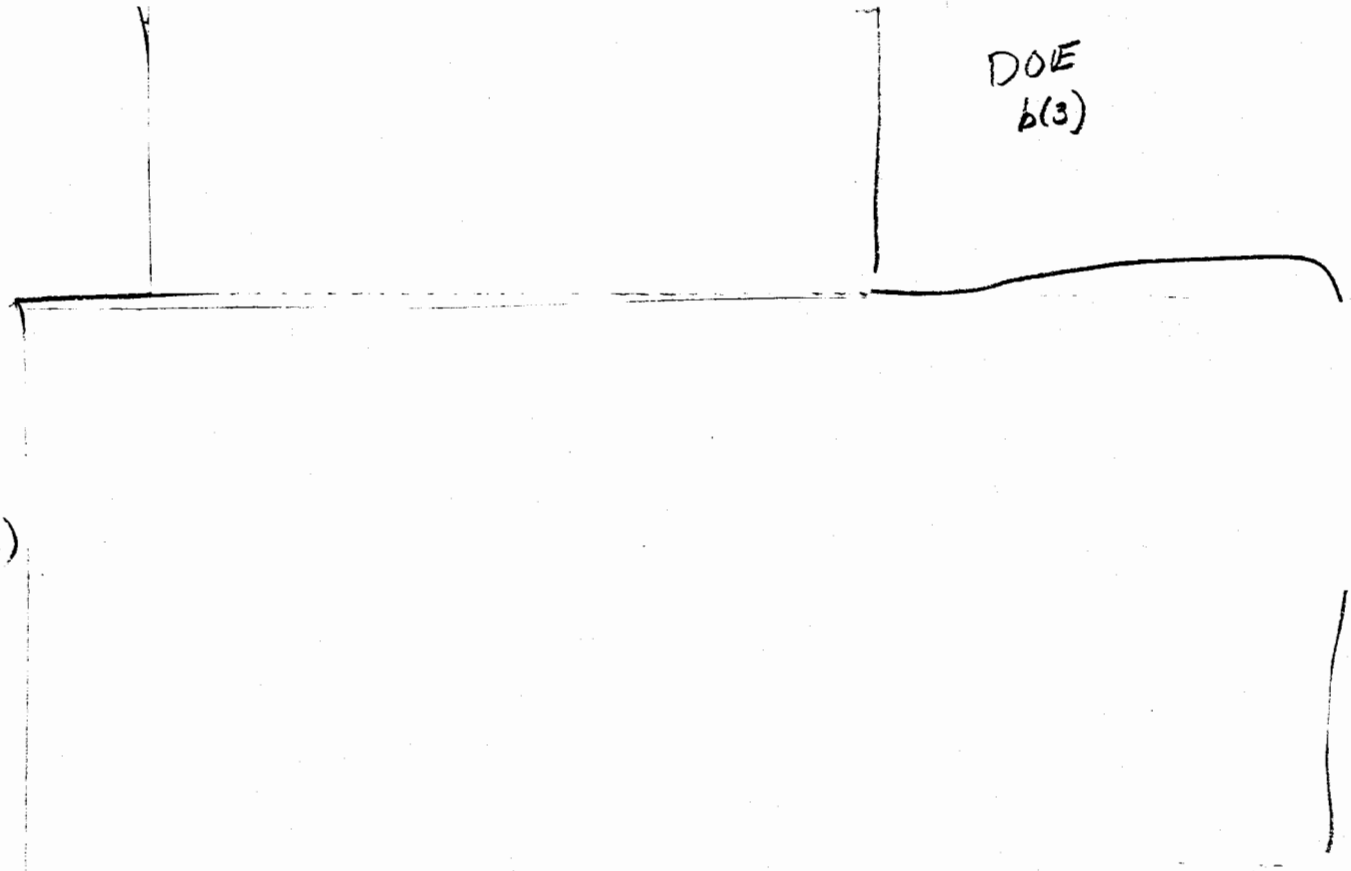

If a bomb is rejected and reservoir removal is desired, a procedure has been developed and approved by Los Alamos to crimp and cut the pit tube. A location on the pit tube allowing the use of two crimp tools is selected. The pit tube is crimped at two very close loactions, sealing both the pit and the reservoir from the atmosphere. The tube is cut

DOE
6(3)

between the crimps. The gas reservoir and its section of the pit tube, with the crimp tool still in place, can now be removed from the bomb.

One-Point Safety

All B53 nuclear systems remaining is stockpile are individually calculated to be inherently one-point safe.

DOE b(3)

DOE b(3)

Secondary

DOE b(3)

III. HIGH EXPLOSIVES SAFETY

Listed below in Table 2 are the high explosives used in the B53.

[redacted]

DOE 6(3)

PBX 9404 is a very energetic high explosive, and it is the standard by which most other HEs are compared. The figures and tables below provide a relative comparison of the sensitivity of the main HE charges in the B53 to other more modern high explosives used in later Los Alamos weapons.

The Skid test, illustrated in Fig. 5 and data Table 3, relates primarily to handling safety during fabrication and assembly of bare main charge HE parts. In this test, a hemispherical billet of HE is dropped vertically onto a sanded steel target inclined at 45°. The height at which events are obtained 50% of the time (H_{50}) is reported. This test combines impact and friction such as one might find in a handling accident and generally gives a relative rating of in-process high explosives.

The large scale pin drop or Spigot test (Fig. 6) is used to assess the safety of large HE charges subjected to combined mechanical impact and shearing. The test assembly is shown in Fig. 7. As above, H_{50} is reported. The Spigot test data (Table 4) are normally applicable to full warhead assemblies subjected to impacts and deformation.

45° SKID TEST

10" DIAM. DROP VEHICLE

EXPLOSIVE 10 LBS
INERT 9 LBS

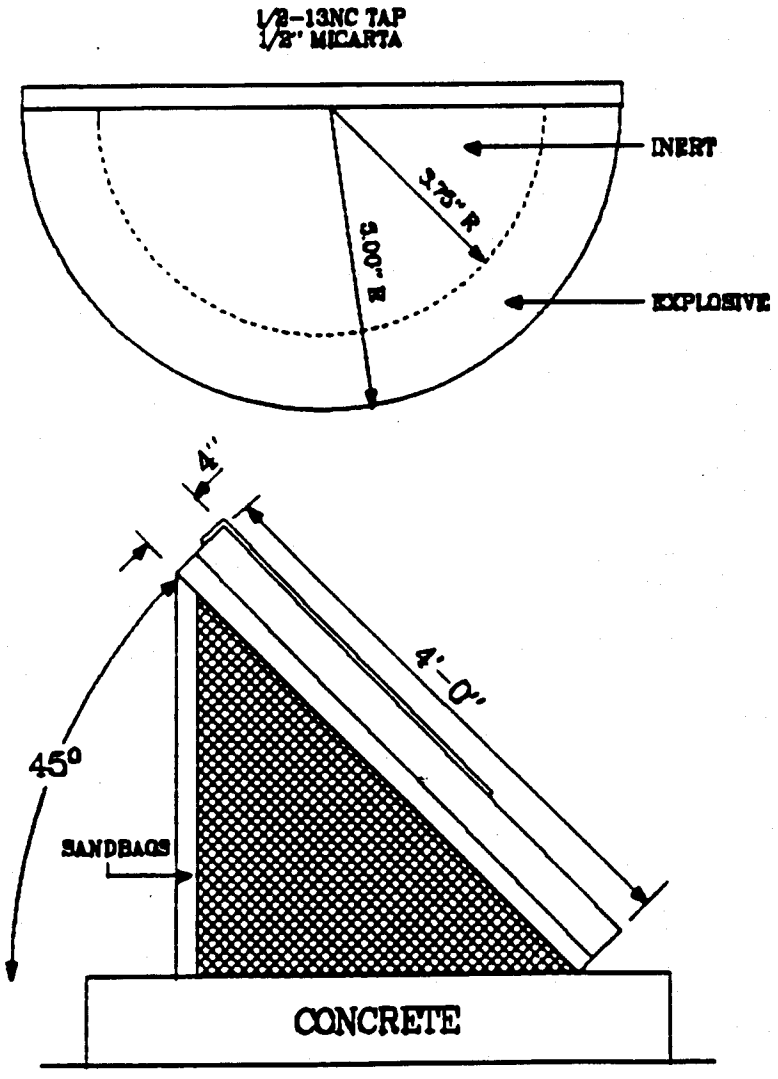

Los Alamos

75

Fig. 5 - Skid Test

THE SKID TEST IS USED TO EVALUATE HANDLING SAFETY OF BARE HE CHARGES

HE	50% DROP HEIGHT FT.	OVERPRESSURE PSI
COMP. B-3	10	1
CYCLOTOL	4	1
PBX-9404	4.5	15 to 20
PBX-9501	26	1 to 2
PBX-9502	>150	NO REACTION

Overpressure is measured with blast gauges 10 feet from the target.

GROUP WX-1, WEAPON ENGINEERING

Los Alamos
LOS ALAMOS NATIONAL LABORATORY

Table 3 - Skid Test Data Table

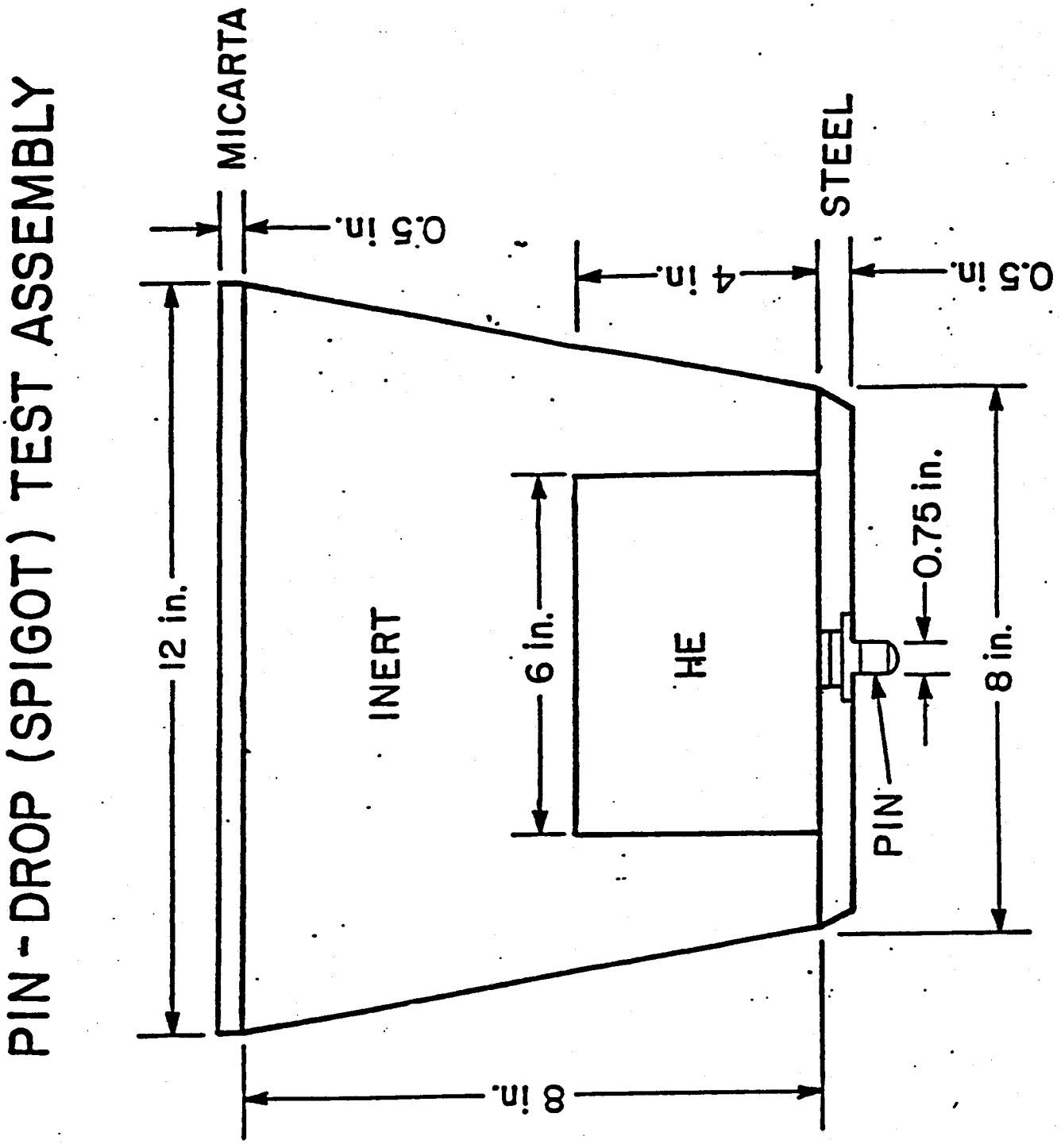

Fig. 6 - Pin Drop Spigot Test Assembly

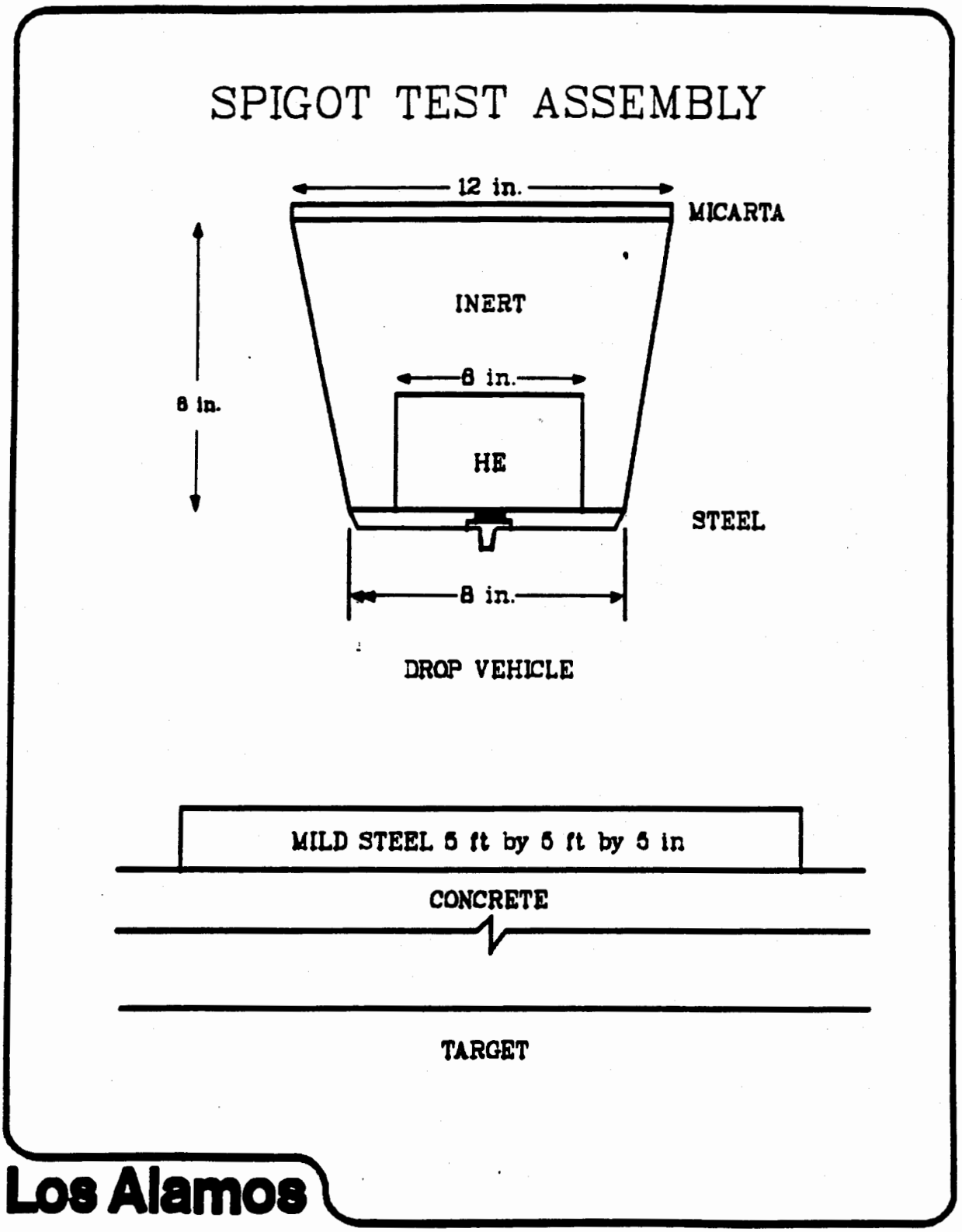

Fig. 7 - Spigot Test Assembly

THE SPIGOT TEST IS USED TO ASSESS THE RESPONSE OF THE HE WHEN SUBJECTED TO MECHANICAL IMPACT AND SHEARING

HE	50% DROP HEIGHT FT.	OVERPRESSURE PSI
COMP. B-3	85	1 - 2
CYCLOTOL	>150	NO REACTION
PBX-9404	49	20
PBX-9501	>150	1
LX-10	75	30
PBX-9502	>150	NO REACTION

GROUP WX-1, WEAPON ENGINEERING

Los Alamos
LOS ALAMOS NATIONAL LABORATORY

Table 4 - Spigot Test Data Table

The data show that the Cyclotol/Comp. B HE sensitivity levels fall in the mid to less sensitive portion of the tables presented. This is best shown by the Susan tests (Figs. 8 & 9). In these tests, Cyclotol and Comp. B are less sensitive than the HMX based PBX HEs. However, they are not as insensitive as PBX 9501 (IHE). The skid drop height of 10 and 4 ft respectively is surprising as compared to the spigot drop test height of 85 ft for Comp B and > 150 ft. for Cyclotol. The skid drop height is used for bare HE handling.

For thermal abnormal environments, several full scale weapon system tests contining Cyclotol as the main charge have been evaluated. These evaluations include both fuel fire tests and accidents. In all of these cases, the Cyclotol did not detonate. The following is a list of these fuel fire test and accidents.

Fuel Fire Tests

1.	W25 (6 tests)	No detonation, HE burned
2.	B28 (1 test)	No detonation, HE burned
3.	W53 (1 test)	No detonation, He burned

Accidents

1.	Bunkerhill (1964)	No detonation, HE burned
2.	McGuire (1960)	No detonation, HE burned

(DOE b(3))

Four accidents involving impacts have occurred that involved cast HE systems where Cyclotol was the main HE charge. Of these four events, one accident did involve HE detonation. The following lists these accidents.

Accidents Involving Impacts

1.	Cumberland, MD. (1964)	No fire, No detonation
2.	Palomares, Spain (1966)	2 detonated on impact
3.	Thule, Greenland (1968)	No detonation, bombs destroyed by fire
4.	Damascus, Ark. (1980)	No detonation, unit recovered intact

DOE b(3)

HE Degradation

Selected properties of Cyclotol and Comp. B have been evaluated from aged stockpile materials and local testing. These evaluations have indicated that the material still performs as good as new. There are no signs of degradation from aging or incompatibility.

SUSAN TEST

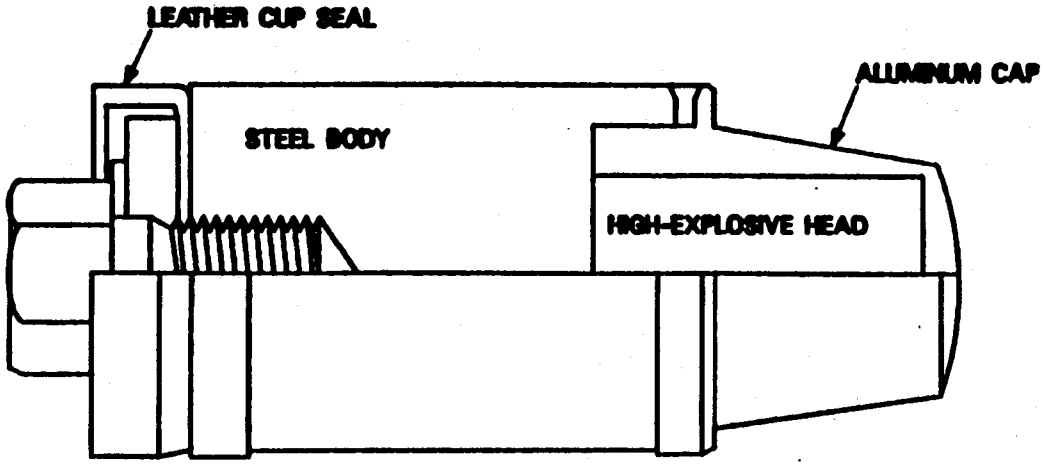

HE SAMPLE	
DIAMETER	5.08 cm
LENGTH	10.16 cm
MASS	~0.45 kg

TARGET: ARMOR-PLATE STEEL
MEASUREMENTS: PROJECTILE VELOCITY
: AIRSHOCK AT PRESSURE GAUGE
OBJECTIVE: DETERMINE RELATIVE ENERGY
: RELEASE

Los Alamos

Fig. 8 - Susan Test

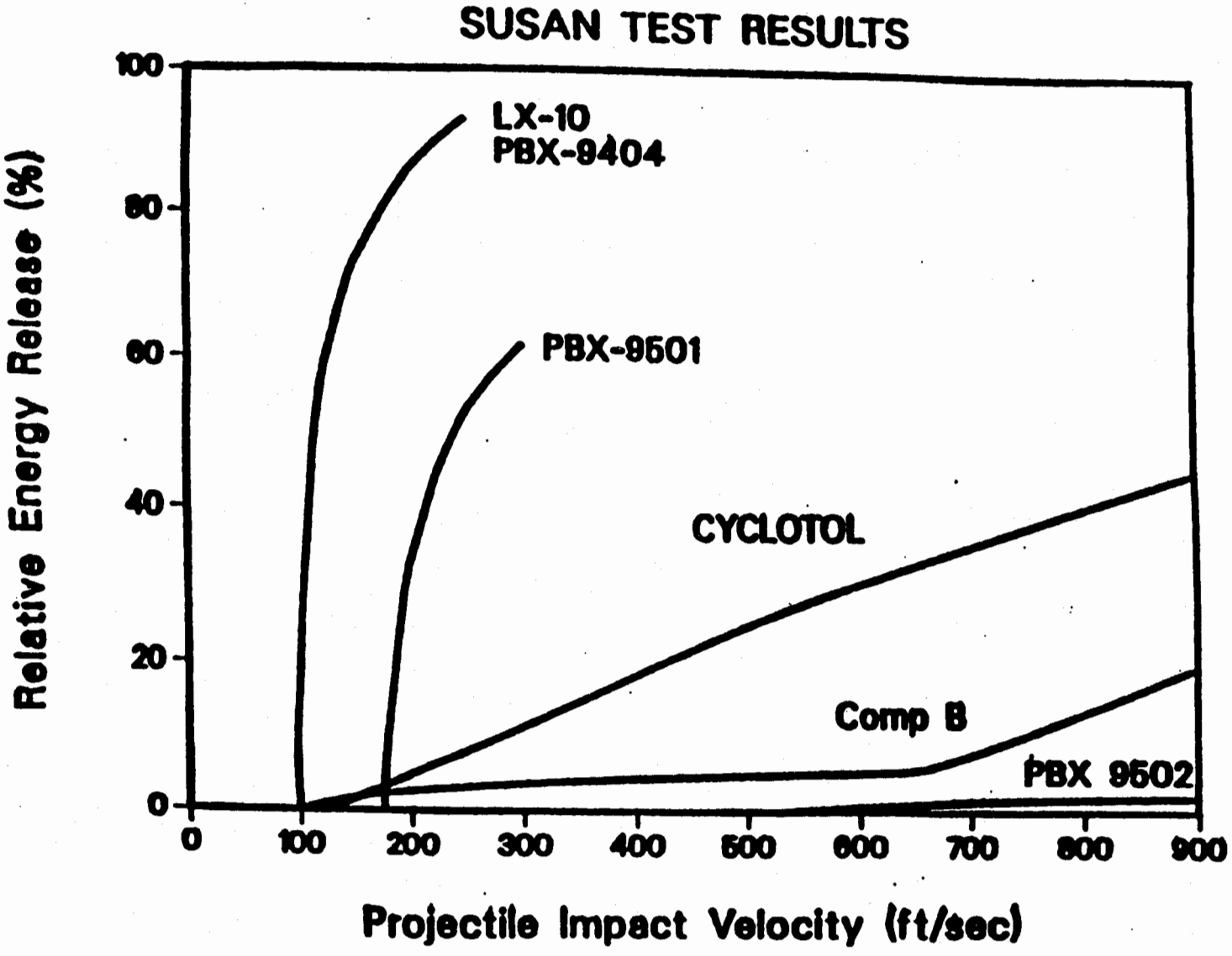

Fig. 9 - Susan Test Results

Material Compatibility

Long term full scale and short term small scale material compatibility tests are carried out for all weapon development programs. These tests involve accelerated aging studies of the warhead materials. In the small scale studies representative material samples are stacked in contact with each other as would occur in the warhead during the stockpile life and are subjected to temperature cycling designed to simulate the STS limits of the weapon and accelerate the aging process. Gas samples are collected and analyzed during the tests, and the small scale assemblies are disassembled and inspected after the test. The tests normally take 6 months, 1 year, or many years to complete, and are intended to represent a 20 year stockpile life. Full scale accelerated aging tests involve the complete weapon and often continue during the stockpile life of the weapon. Incompatibilities that are revealed during the weapon development are corrected by changing materials or design.

Another program carried on at Los Alamos is the explosive compatibility program. Explosives and formulations of explosives and all materials that come in direct contact with them or are employed in HE processing areas are tested. The materials may include floor wax, cleaning solvents, adhesives, mold releases, etc. The tests include vacuum stability tests and differential thermal analysis. Deviations from standard or expected behavior will cause materials to be rejected or forbidden from use with explosives or in explosive processing areas. Current materials found in HE assembly/disassembly areas have been approved for use with ALL explosives in general use today. Therfore, there are no incompatibilities with the materials and surroundings presently found at Pantex and the B53 high explosives.

Stockpile Evaluation

In general, the stockpile and quality evaluation program for the B53 follows that of most other Los Alamos systems.

DOE b(3)

Typically, bombs are randomly selected from the stockpile and returned to Pantex for disassembly and evaluation. To date, these unit evaluations have revealed nothing of consequence. Minimal HE cracking has been observed but deemed inconsequential.

DOE b(3)

Additional stockpile information was obtained when the W53 was retired in 1987-88. These units revealed no problems with the nuclear components other than what is stated above.

The last full SLT was conducted in 1983. Since then, there has been minimal testing of this weapon system. One bomb was looked at in 1987 and another in 1990. A positive outcome from this NESS will allow the evaluation of another B53 bomb.

Detonators

Samples of all DOE detonators are tested during development by thermal cycling, temperature shock, vibration, and acceleration primarily for reliability assessment. These tests also relate to the safety aspects of the detonators. The 1E26 detonator assembly has successfully passed all the environmental tests. Additionally, these detonators have been routinely sample tested during preproduction, production, and stockpile sampling with no deficiencies in safety or operational aspects noted.

Valve Safety

The Type 1A valve is actuated by Type 1A squibs. A piston is driven down through the bore that severs the pit and the bottle tubes allowing boost gas to enter the pit. This valve poses no explosive safety concerns because all the reaction products and the pistion motion are contained within the valve body. The actuators are designed to function under a 28 volt source with a 500 ma all-fire and a 150 ma no-fire current rating.

Actuator ESD Sensitivity

These actuators are known to be sensitive to electrostatic discharge (ESD) when tested with a standard ESD pulse (20kV, 500 pF through 500 ohms) pin-to-case. Tests of the Type 1A squibs have resulted in failure to pass ESD pin-to-case tests with conditions of 5 kV, 500 pF through 500 ohms. Therefore, special bonding practices during all assembly/disassembly operations are required, and shorting plugs should be in place at all times after the firing cables are disconnected.

SECRET

DOE b(3)

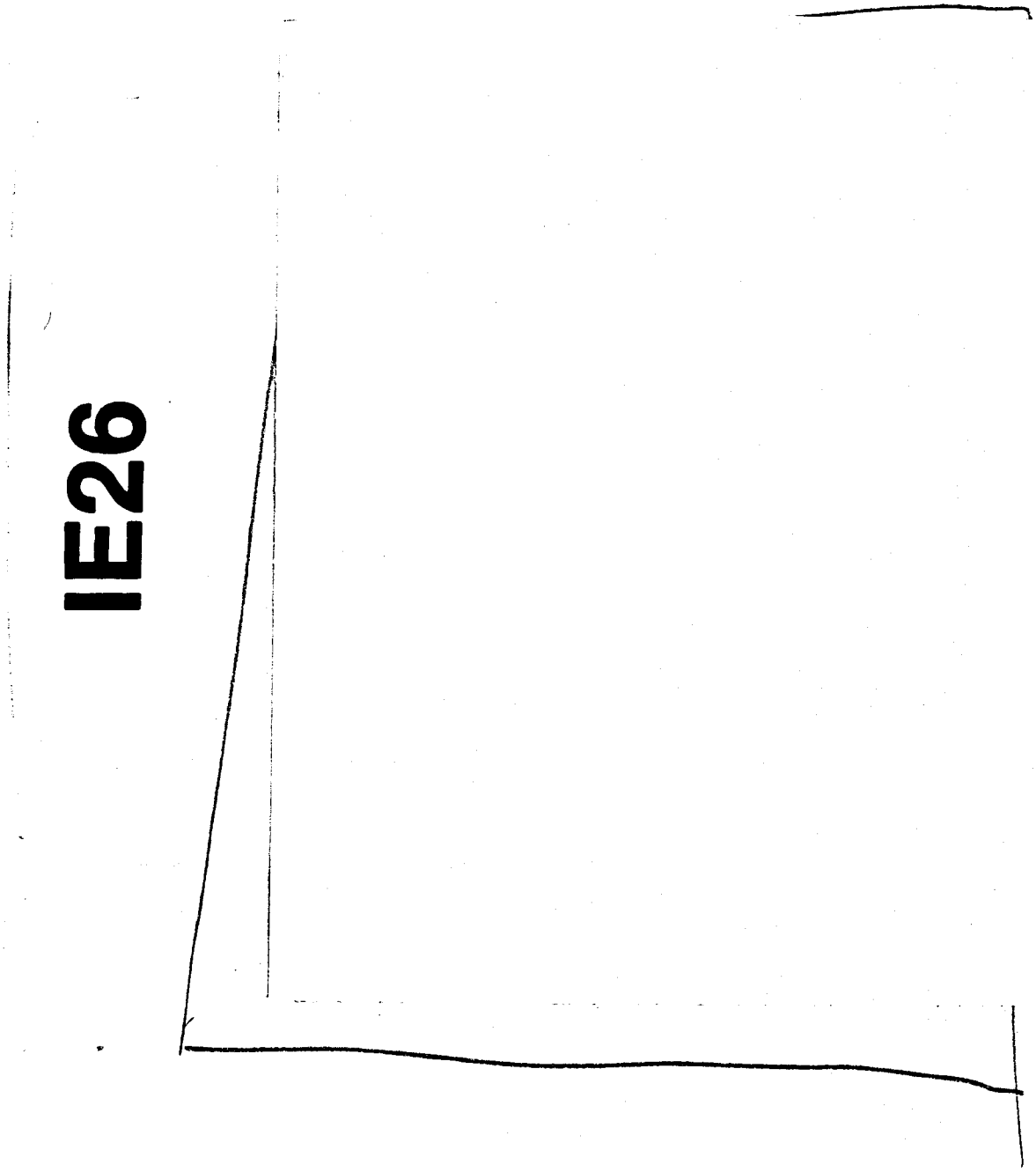

Fig. 10 - 1E26 Detonator

SECRET

IV. CRITICALITY SAFETY

Single Units

[redacted] From a criticality perspective, this all-uranium pit has three characteristics which distinguish it from Pu pits found in the stockpile. However, all pits of Los Alamos origin, whether they contain uranium, Pu, or both as the fissile material, only pose a criticality hazard (as single units) during extreme accidents involving water flooding inside the pit.

Type 76 Pit

The three distinguishing characteristics are:

* Uranium is corroded much more slowly by water than is Pu, either alpha or delta.
* Uranium is attacked much more slowly by H_2 gas than is Pu, either alpha or delta.
* [redacted]

The implication of these first two points is that prompt recovery (i.e. few days or less) of a B53 from a water environment precludes any credible criticality concerns. That is, insufficient uranium corrosion and hydriding will have occurred to give rise to the hazards discussed (for Pu) in the TP 60-1 manual, particularly section 3-2.5, flooding/criticality. Obviously, if water has not entered the pit then there are no criticality concerns even for prolonged underwater conditions. However, if a unit is involved in an accident leading to even possible internal flooding, then it would seem prudent to assume such.

The two extremes from a criticality standpoint are full water reflection outside [redacted] and essentially zero reflection outside. For these cases, minimum conditions are:

Reflected

[redacted]

Bare

[redacted]

Figure 11 (Figure 11 from Doc. LA-10860-MS) presents critical volume and indirectly, critical mass information which supports these statements

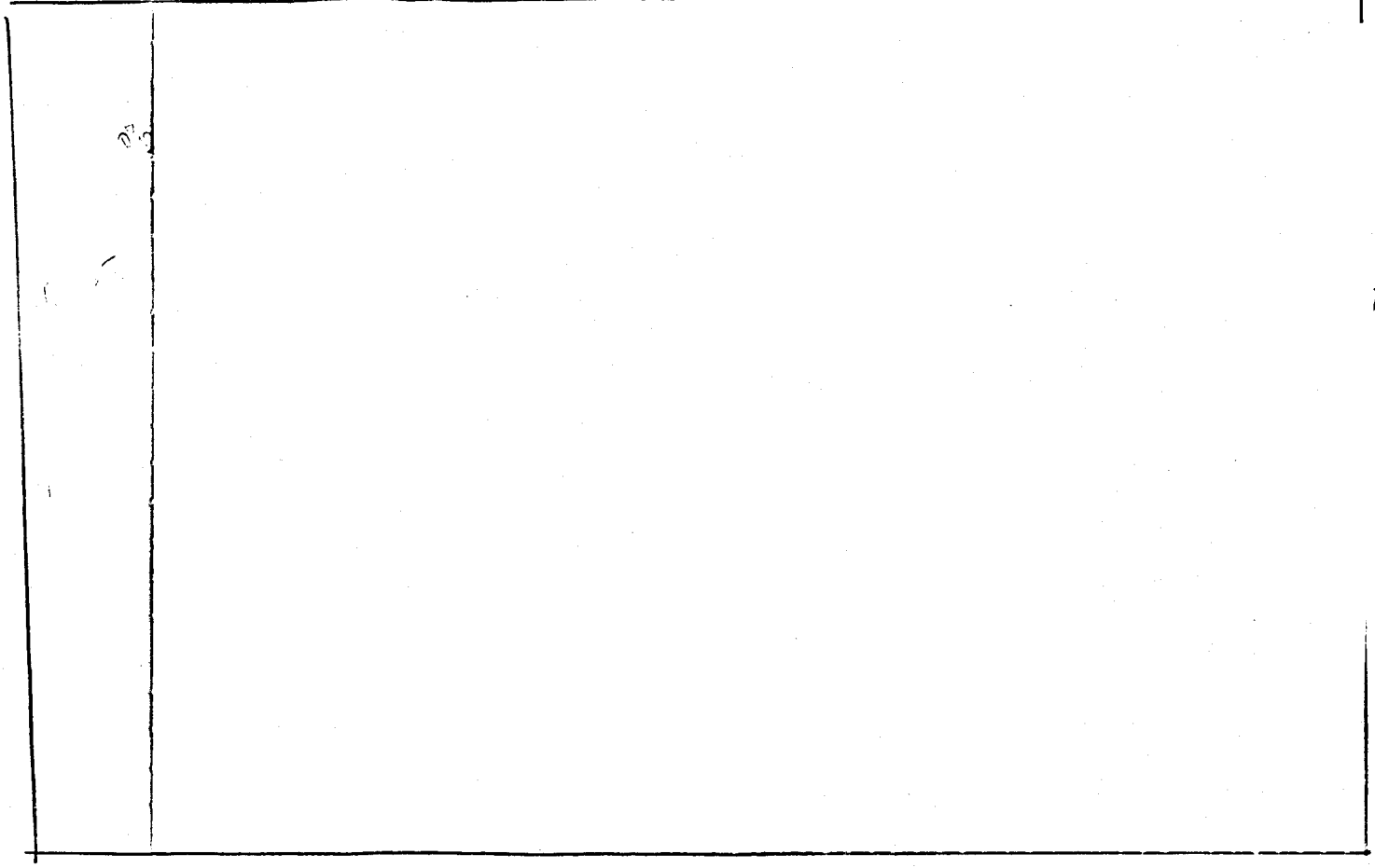

DOE b(3)

Arrays/Multiple Units

DOE b(3)

For a modest number of units (approx. 10), there are no criticality concerns for any spacing/arrangement. This remains true in a water flooded and/or reflected environment.

DOE b(3)

DOE b(3)

The largest, most reactive array achievable is approximately a 2x2x3, based on current stockpile data. For pits in DT-22 containers (the currently approved shipping array), the SAR shows that an infinitely large array would still be subcritical.

Should flooding of a storage area containing multiple units occur and if water ingress to the inside of the pit is considered credible, then the precautions listed under SINGLE UNITS in reference 4 should be observed.[4] 87

DOE
b(3)

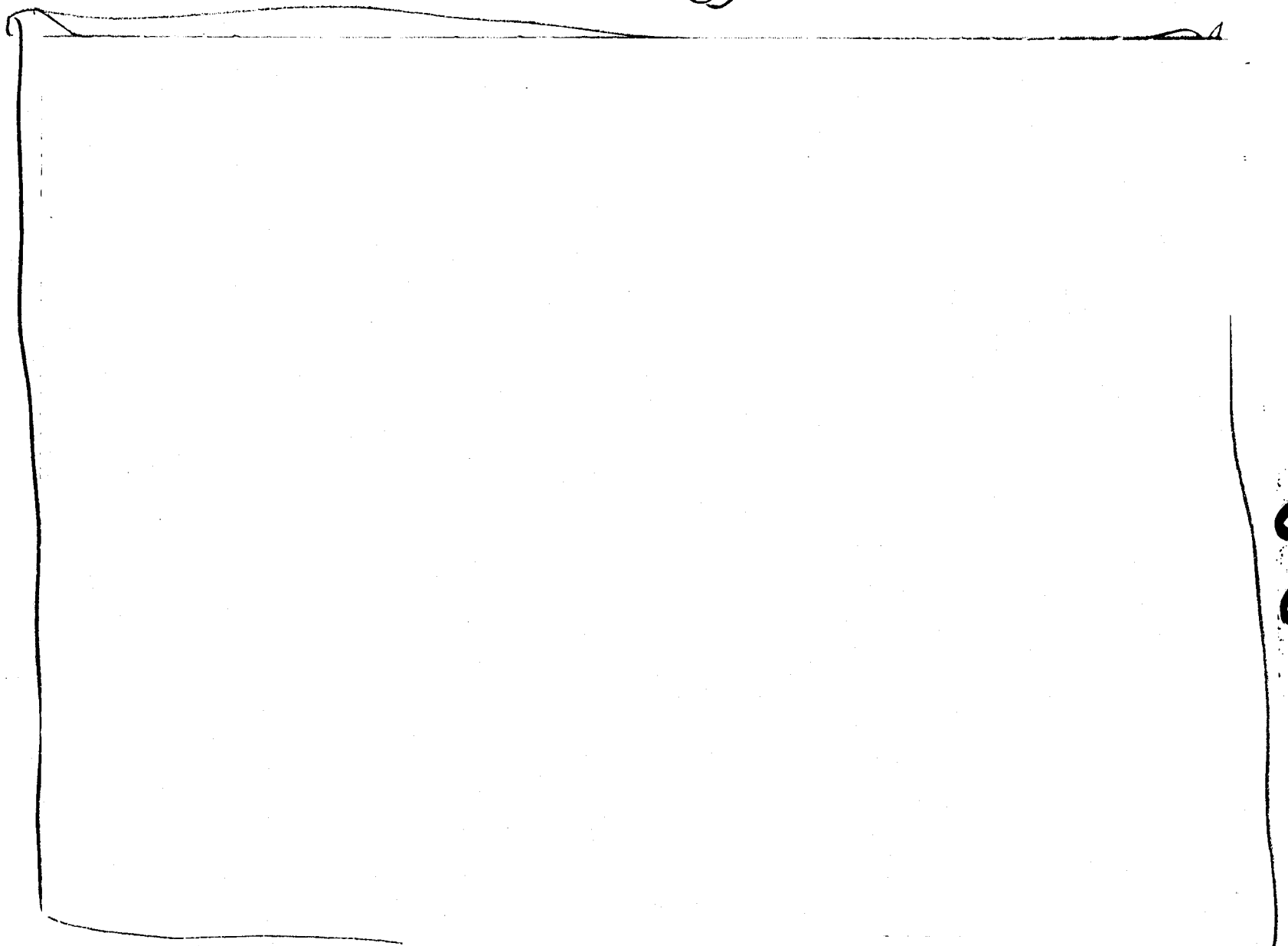

Fig. 19. Critical mass vs ^{235}U enrichment of uranium metal. The dashed line represents the enrichment below which a piece of uranium metal cannot become critical, as determined by an international reactor physics program.

Fig. 12 - Critical Mass vs ^{235}U

V. NUCLEAR EXPLOSIVE SAFETY ORDERS AND SUPPLEMENTAL DIRECTIVE

Los Alamos believes that we are in compliance with the applicable provisions of DOE 5610.11, and AL 5610.11

INTRODUCTION

Following is the Mason & Hanger/Battelle Pantex input document for the Nuclear Explosive Safety 5 year B53-1 Mechanical study. This document presents the Process Flow for Disassembly, Tooling used in handling the Nuclear device, and a listing of all approved O & I Standards.

B53-1 UNIT FLOW

Attachment A defines the typical flow of the unit from receipt at Pantex (by Safe-Secure Trailer SST), through the complete disassembly and inspection process to obtain Parent Unit Parts for support of a B53-1 JTA.

The unit is obtained from the DOD by the DOE and transported to Pantex via SST. At the time of receipt in Zone 4 a receiving inspection for Safeguard Verification (Ref General Standard 7-0849.3), Serial Number and special markings conformation, and potential damage, etc. is performed.

When the unit is scheduled for operations, it is transported to Zone 12-26 loading dock by Pantex transportation personnel. The unit is delivered to 12-104 Bay 8 where it is removed from the H794 Hand Truck.

Disassembly is completed per NEOP N53-301800.

The End Cap Assembly is then staged in Zone 12 and the Basic Assembly is transported back to Zone 4 staging area.

B53-1 NEOP AND O & I STANDARDS

Attachment C lists the B53-1 procedures which will be reviewed during the study. The date and issue may be different due to on-going work at this time.

The O & I Standards are all current at this time. The NEOP (N53-301800) will be reviewed prior to the Nuclear Explosive Safety Study according to the current policies which includes, but is not limited to the Evaluation Engineer, Operation Manager, Technical Writer and the Nuclear Explosive Safety Representative. This indicates that the NEOP will have been reviewed by all ES&H Departments, Production Supervision and an Independent Evaluation Engineer.

All disciplines will have reviewed and approved this procedure.

UNCLASSIFIED

NEOP N53-301800 has been through Validation Review with recommendations from the Validation Review Team currently being incorporated.

B53-1 LIFTING/HANDLING FIXTURES

This document also contains a list of the B53 Lifting and Handling Fixtures which are utilized in this Disassembly Process. All load testing of the Special Tooling in question is to be completed as stated in the attachment. All load testing will utilize testing procedures which have been approved by Nuclear Explosive Safety Master Study.

UNCLASSIFIED

B53-1 PARENT UNIT PARTS DISASSEMBLY

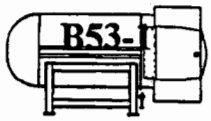

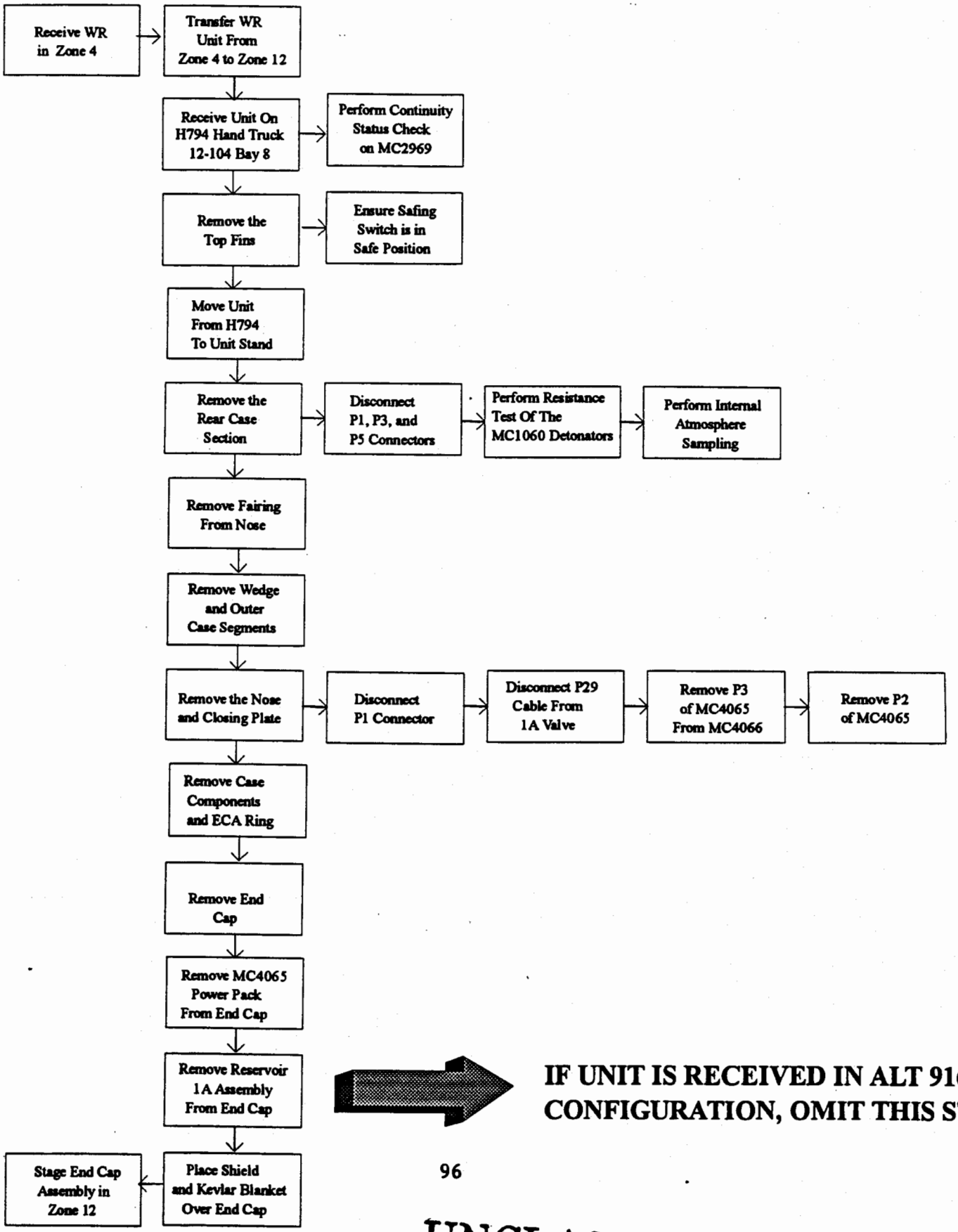

UNCLASSIFIED

B53 LIFTING/HANDLING FIXTURES

DRAWING	TITLE	SDS	ANALYSIS ON FILE	LOAD TEST	LOAD TEST ADAPTER	COMMENTS
053-2-009	Process Stand	None	Yes	No	None	
053-2-041	Beam Type Sling	12406	No (Doc. on file)	Yes 12,000#	053-2-242 053-2-243 053-2-248	Complete dwg. def. does not exist at Pantex. Certification is per IOP E-4202
053-2-054	Horiz. Insertion Fxtr	12446	Yes	Yes 2,400#	053-2-247	
053-2-055	Stand	None	Yes	No	None	
053-2-075	Unit Sling	12447	No (Doc. on file)	Yes 20,000#	053-2-249	Complete dwg. def. does not exist at Pantex. Certification is per IOP E-4202
053-2-078	Hoist Adapter	12406	Yes	Yes 7,650#	053-2-248	
053-2-174	Hoist Adapter	12458	No-(Doc. on file)	Yes 3,000#	None required	Complete dwg. def. does not exist at Pantex. Certification is per IOP E-4202

N:cwelch\B53

UNCLASSIFIED