SAC 200129130000

UNCLASSIFIED

ADAPT and SWPP (u)

Los Alamos

Tim Neal

21 October 1997

Attd 2

DEPARTMENT OF ENERGY DECLASSIFICATION REVIEW	
1ST REVIEW-DATE: 6/15/99	DETERMINATION (CIRCLE NUMBER(S))
AUTHORITY: ☒ DC ☐ DD	1. CLASSIFICATION RETAINED
NAME: Eric Holzer	2. CLASSIFICATION CHANGED TO:
	3. CONTAINS NO DOE CLASSIFIED INFO
2ND REVIEW-DATE:	4. COORDINATE WITH:
AUTHORITY: DD	5. CLASSIFICATION CANCELED
NAME: L.C. Phillips	6. CLASSIFIED INFO BRACKETED
	7. OTHER (SPECIFY):

Albuquerque Operations Memo dtd 7/31/98

RESTRICTED DATA
This document contains Restricted Data as defined in the Atomic Energy Act of 1954. Unauthorized disclosure subject to Administrative and Criminal Sanctions.

CONFIDENTIAL
UNCLASSIFIED

Classified By: L.C. Phillips Class. (Name/Personal Identifier & Title)
Derived From: CG-W-5, 2/98 (Guide/Source Document & Source Date)

98SA20CD00128

1 - Weapon Specific PD

UNCLASSIFIED

WBS	PI	Title	Category	Direct Support
1.5.4.2.1	M. Palmer	Pit Manufacturing Process Coordination	Pits	W88
1.5.3.3	B. McKerley	Rebuild/Surveillance Analytical Chemistry	Pits	W88
1.5.4.2.5	K. Axler	Pit Casting Issues	Pits	W88
1.5.4.2.4	C. Taylor	Supercritical CO2 Cleaning	Pits	W88
1.5.4.2.6	J. Williams	Pyrochemical Processing	Pits	W88
1.5.4.2.7	M. Moy	Pit Materials Compatibility	Pits	W88
1.5.4.2.3	M. Moy	Pit Analytical Standards	Pits	W88
1.5.4.2.2	C. Leasure	Pit Manufacturing Analytical Chemistry	Pits	W88
1.5.6.1	T. Turner	Detonator Production Definition	High Explosives	W87/B61
1.5.8	TBD	Time Dependent Behavior of W76 AFT Supports	Nonnuclear Components	W76
1.5.2.4	T. Vidlak	Pit and Container Storage at Pantex	Assembly/ Disassembly	Old/W76

~~CONFIDENTIAL~~

UNCLASSIFIED

3 - New Process Development

UNCLASSIFIED

WBS	PI	Title	Category	Preparatory Support
1.5.5.2	D. Korzekwa	U Near Net Shape Process & Models	Canned Subassemblies	SMRI
1.5.5.3	S. Kinkead	Purification of a Special CSA Material	Canned Subassemblies	W78
1.5.5.1	P. Tubesing	Enclosed U Operations	Canned Subassemblies	SMRI
1.4.2.3	J. Nielsen	ULISSES	Canned Subassemblies	SMRI
1.5.7.2	R. Nolen	Tritium Storage Materials	Tritium and Reservoirs	W80
1.5.6.2	R. Flesner	Implementation of Base Hydrolysis/Hydrothermal Processing at Pantex	High Explosives	Old
1.5.6.3	T. Turner	Manufacture of Improved Detonator Powders	High Explosives	All

DOE
1 b(3)

UNCLASSIFIED

6 - IPPD / Agile Manufacturing

WBS	PI	Title	Category	Preparatory Support
1.5.1.4	K. Franklin	Requalification at Pantex	Product Qualification and Acceptance	W78/W80

DOE F 1325.8

[redacted] UNCLASSIFIED

SAC200129140000

United States Government

Department of Energy

memorandum

Albuquerque Operations Office

DATE: FEB 18 [redacted]

REPLY TO ATTN OF: WPD:JC

SUBJECT: Supplemental AL Workload Planning Guidance (AWLPG) Information (U)

TO: Those on Attached List

This memorandum provides supplemental guidance to the AWLPG 98-0 document that should be used in formulating Stockpile Life Extension Program budget forecasts as required in the Fiscal Year 2000 Budget Call.

Table 1 provides a listing of products and assemblies, by program, that constitute the workload cases to be analyzed and forecast. Where additional detail or definition is required, production sites should contact appropriate design agency systems personnel for assistance. As soon as possible, production sites should submit a listing of the product and assembly assumptions utilized in their budget analysis to Weapon Programs Division. Reference Table 2 for a matrix identifying points of contact.

Table 3 provides yearly, ultimate use Start I schedules, by program and workload case, that should be used in the generation of budget forecasts. Table 4 provides the same type schedule information for Start II levels. Production sites should assume a 3 month lead time for first order delivery requirements. Higher order delivery requirement lead times should be negotiated with the receiving site and documented as a cost study assumption.

Guidance contained in this memorandum supersedes information included in AWLPG 98-0.

DEPARTMENT OF ENERGY DECLASSIFICATION REVIEW	
1ST REVIEW-DATE: 6/13/95	DETERMINATION [CIRCLE NUMBER(S)]
AUTHORITY: ☒ DC ☐ DD	(1) CLASSIFICATION RETAINED
NAME: Lee Holzer	2. CLASSIFICATION CHANGED TO:
2ND REVIEW-DATE:	3. CONTAINS NO DOE CLASSIFIED INFO
AUTHORITY: DD	4. COORDINATE WITH:
NAME: L.C. Phillips	5. CLASSIFICATION CANCELED
	(6) CLASSIFIED INFO BRACKETED
	7. OTHER (SPECIFY):

Albuquerque Operations Memo dtd. 7/31/98

WITH ATTACHMENTS/ENCL

Patricia E. O'Guin
Deputy Director
Weapon Programs Division

cc:
See page 2

[redacted]

Derived From: CG WS 10/95

UNCLASSIFIED

[redacted]

Attd 2

98SA20C000128

Addressees - Memorandum dated FEB 1 8 1998

Steve Henry, DP-22, HQ
Steve Goodrum, AAO
Dave Gurule, KCAO
Wayne Richardson, SR
Mark Livesay, OR
Tom Todd, LAAO
Mike Zamorski, KAO
Henry Vigil, MS-A102, LANL
Larry Witt, MS-F630, LANL
Paul Cunningham, MS-A102, LANL
Bob Henderson, MS-F660, LANL
Frank Villareal, MS-0107, SNL/NM
Don McCoy, MS-0453, SNL/NM
Leonard J. Martinez, MS-0869, SNL/NM
Al Strouphauer, MS-0423, SNL/NM
John Arfman, MS-0423, SNL/NM
Jim Woodard, MS-1233, SNL/NM
Vic Johnson, MS-0634, SNL/NM
Larry Altbaum, MS-L125, LLNL
Rodney Skelton, MHC
John Hudson, MHC
Kathleen Herring, MHC
Larry Mayes, MHC
Steve Beeler, AS-FM&T/KC
John Clayton, AS-FM&T/KC
Michelle Stine, AS-FM&T/KC
Dale Basham, AS-FM&T/KC
Linda Williamson, MS-8223, LMES
Jim Stout, MS-8208, LMES
Margaret Morrow, MS-8016, LMES
Bill Reis, MS-8016, LMES
Pam Kennedy, WSRC
Dennis Hayes, WSRC
Earl Whiteman, OTSP, AL
Kathy Carlson, ONDP, AL
Pat O'Guin, SPD, AL
Stan Hearron, TDD, AL
Ralph Levine, WQD, AL
John Garberson, WQD, AL
Mark Baca, WSD, AL
Richard Glass, WPD

Addressees - Memorandum dated FEB 18 1998

Mike Echart, WPD, AL
Dan Rose, WPD, AL
Luis Paz, WPD, AL
Curt Kenagy, WPD, AL

TABLE 1

PROGRAM LIFE EXTENSION OPTIONS

PROGRAM	CASE 1	CASE 2	CASE 3
61-3/4/10	Common Nose (includes MC4033) Misc Pads, Plastic Parts, Foams, O-rings (FIELD)	Neutron Generators (Small Tube) ECA Power Supply (FIELD)	Neutron Generators (Small Tube) ECA Power Supply Acom Programmer Fwd & Aft Cases NEP Plastic Parts IHE Cables Misc Pads, Plastic Parts, Foams, O-rings
61-7/11	Trajectory Sensing Signal Generator Junction Box (with LAC) Preflight Controller ICU MET CSA Function Select Switch Cables Misc. Pads, Plastic Parts, Foams, O-rings (FIELD)	Neutron Generators (Small Tube) Parachute (FIELD)	Neutron Generators (Small Tube) Parachute Acom Programmer NEP Plastic Parts IHE Cables Misc. Pads, Plastic Parts, Foams, O-rings
62		Neutron Generators (Large Tube) Fuze (SNL design) Firing Set (CDU with CAP-like features) Stabber Battery Bulkhead Dets Programmer/Controller Acom and valve LAC NEP Supports Misc Pads, Plastic Parts, Foams, O-rings	Same as Case 1

TABLE 1

PROGRAM LIFE EXTENSION OPTIONS

PROGRAM	CASE 1	CASE 2	CASE 3
76		CHE Dets and Holddowns Cables Misc. Pads, Plastic Parts, Foam, O-rings	CHE Dets and Holddowns Cables Misc. Pads, Plastic Parts, Foam, O-rings New AF&F CSA Backup Ring Aft Support & Cover Seal Cover Cables Misc. Pads, Plastic Parts, Foams, O-rings
78		CSA Schrader Valve Desiccant Tapered Tapes LACs Misc. Pads, Plastic Parts, Foams, O-rings	CSA Schrader Valve Desiccant Tapered Tapes LACs Misc. Pads, Plastic Parts, Foams, O-rings CHE Firing Set Modification
80		Desiccant Neutron Generators (Small Tube) Schrader Valve 1K Valve Area Mount (Mod 0 only) Misc. Pads, Plastic Parts, Foams, O-rings	Desiccant Neutron Generators (Small Tube) Schrader Valve 1K Valve Area Mount (Mod 0 only) Misc. Pads, Plastic Parts, Foams, O-rings Trajectory Sensing Signal Generator Interconnect Control Box (ICCB) Firing Set (with Det Safing & MET features) WES Cover Cables Function Select Actuators IHE & Dets Acorn

TABLE 1

PROGRAM LIFE EXTENSION OPTIONS

PROGRAM	CASE 1	CASE 2	CASE 3
83-1	R2 & R3 Valves Actuators CF Cables Bends (FIELD)	Neutron Generators (Small Tube) Main Filter Pack Preflight Controller CF Cables	Neutron Generators (Small Tube) Main Filter Pack Preflight Controller CF Cables Detonator/Booster Det Cable
83-0	R2 & R3 Valves Actuators CF Cables Bends (FIELD)	Neutron Generators (Small Tube) Main Filter Pack Preflight Controller CF Cables	Neutron Generators (Small Tube) Main Filter Pack Preflight Controller CF Cables Mod 0 to 1 Conversion Alt 752 Product (Common Radar) Detonator/Booster Det Cable
87			Acorn
88			Acorn

SAC200129150000

SECRET UNCLASSIFIED

United States Government Department of Energy

memorandum

Albuquerque Operations Office

DATE: January 07, 1998

REPLY TO ATTN OF: WPD:CKK

SUBJECT: Albuquerque Workload Planning Guidance (AWLPG) 98-0 Transmittal

TO: Those on Attached List

Transmitted for your use is the AWLPG 98-0 document. The AWLPG contains the information necessary for your organization to complete schedule 10 of the Special Schedules in the AL FY2000 Budget Call. If you have any questions please contact Curt Kenagy, of my staff, at (505) 845-5075.

K A Carlson

Kathleen A. Carlson
Assistant Manager for
National Defense Programs

Attachment (SFRD)

DEPARTMENT OF ENERGY DECLASSIFICATION REVIEW	
1ST REVIEW-DATE: 6/16/99 AUTHORITY: ☒ DC ☐ DD NAME: Eric Hetzen 2ND REVIEW-DATE: AUTHORITY: DD NAME: L.C. Phillips	DETERMINATION (CIRCLE NUMBER(S)) 1. CLASSIFICATION RETAINED 2. CLASSIFICATION CHANGED TO: 3. CONTAINS NO DOE CLASSIFIED INFO 4. COORDINATE WITH: 5. CLASSIFICATION CANCELED 6. CLASSIFIED INFO BRACKETED 7. OTHER (SPECIFY):

Albuquerque Operations Memo dtd. 7/31/98

WITH ATTACHMENTS/ENCL

DOCUMENT TRANSMITTED HEREWITH CONTAINS FORMERLY RESTRICTED DATA

When separated from enclosures handle this document as UNCLASSIFIED

SECRET UNCLASSIFIED

Attch 4

98SA20C000128

Distribution for Memorandum dated January 07, 1998

Steve Henry, DP-22, HQ
Steve Goodrum, AAO
Dave Gurule, KCAO
Wayne Richardson, SR
Mark Livesay, OR
Tom Todd, LAAO
Mike Zamorski, KAO
Henry Vigil, MS-A102, LANL
Larry Witt, MS-F630, LANL
Paul Cunningham, MS-A102, LANL
Frank Villareal, MS 0107, SNL/NM
Don McCoy, MS 0453, SNL/NM
Leonard J. Martinez, MS 0869, SNL/NM
Al Strouphauer, MS 0423, SNL/NM
John Arfman, MS 0423, SNL/NM
Jim Woodard, MS 1233, SNL/NM
Larry Altbaum, MS L125, LLNL
Rodney Skelton, MHC
John Hudson, MHC
Kathleen Herring, MHC
Larry Mayes, MHC
Steve Beeler, AS-FM&T/KC
John Clayton, AS-FM&T/KC
Michelle Stine, AS-FM&T/KC
Linda Williamson, MS-8223, LMES
Jim Stout, MS-8208, LMES
Margaret Morrow, MS-8016, LMES
Pam Kennedy, WSRC
Dennis Hayes, WSRC
Earl Whiteman, OTSP, AL
Kathy Carlson, ONDP, AL
Pat O'Guin, SPD, AL
Stan Hearron, TDD, AL
Ralph Levine, WQD, AL
John Garberson, WQD, AL
Mark Baca, WPD, AL
Mike Eckart, WPD, AL
Dan Rose, WPD, AL
Luis Paz, WPD, AL
Curt Kenagy, WPD, AL

Table of Contents

1. Introduction

- Purpose
- SLEP Description, Goals, Reference
- P&PD 98-0 Guidance
- AWLPG Description
  - LEOs
  - Schedules
  - Cost estimating guidance

2. Assumptions/Constraints/Goals

3. Life Extension Options (LEOs)
- Narrative
  - LEO Description
  - Hard vs Soft Drivers
  - Emerging Issues
- Table 1. LEO Spreadsheet

4. Schedules
- Table 2. START I Schedule
- Figure 1. Refurbishment Schedule
- Figure 2. Workload Schedule
- Figure 3. Pantex START I Schedule
- Figure 4. Y-12 START I Schedule
- Table 3. START II Schedule (with NO Augmentation)
- Figure 5. Pantex START II Schedule
- Figure 6. Y-12 START II Schedule

5. Cost estimating guidelines
- Reference Budget Call
- Unit/System Costs
- Component Unit Cost
- Phased Costs

6. Due dates

2. Develop a standard methodology to review weapons for refurbishment actions on a recurring basis. This methodology will utilize a risk management process to assess the reliability of weapon components using an objective, analytical approach, and determine the vulnerability of each component to aging phenomena. This process provides a means to identify and separate those components where the greatest concerns from aging effects exist and whose failure/degradation would have the most deleterious effect on weapon performance from those components having minimal impact or no known aging effects. Once components are segregated and prioritized from most to least risk to stockpile performance for each weapon type, LEOs will be created for each warhead/bomb.

3. Provide the basis for coordinating with the DoD. The DoD must have a full understanding and confidence in DOE's analysis of component degradation including the basis for these analyses, and the impact the degradation will have on a weapon's reliability, performance, and safety. Once this understanding is achieved, efforts can focus on coordinating the specifics and detailed scheduling for the implementation of LEOs

4. Provide the basis for redefining the DOE acquisition process throughout the weapons complex by establishing programmatic controls for the implementation of LEOs. The DOE Phase One through Phase Seven Nuclear Weapon Development Process, while suited for an environment that emphasizes new weapon design and production, must now be adapted to focus on refurbishment activities and accommodate new concepts, e.g., concurrent design and manufacturing processes, rapid prototyping, etc.

5. Establish a multiyear, requirements-based, program planning, budgeting and execution system for DP. A multiyear program plan to identify requirements and associated resources to satisfy the requirements is the key output of SLEP. To accomplish this activity, DP plans to develop and implement a Programming Planning, and Budgeting Execution System (PPBES) to focus on multiyear program planning, while meeting single-year OMB and Congressional budget submission requirements.

c. Program and Planning Directive (P&PD) Guidance

P&PD 98-0 provides the following Budgeting and Programming Guidance:

"SLEP has developed a set of proposed LEOs by weapon type. The LEOs represent DOE's best assessment of current and future workload expectations. The charts are to be used for planning and budgeting purposes only. These LEOs are to provide the basis for the Albuquerque Workload Planning Guidance. These LEOs should be used for budget submissions at a START I stockpile level. To bound expected cost, a START II stockpile without reactivation should also be

costed, as START II with reactivation essentially equals a START I cost. The LEOs do not constitute an Alteration or Modification until approved by the appropriate Project Officers Group."

d. AWLPG Description

This document contains the following elements needed for the weapons complex to estimate long range budgets:

(1) Life Extension Options (LEOs) for each weapon system
(2) Schedules for implementing the LEOs, for both START I and START II scenarios
(3) Cost estimating guidelines
(4) Assumptions, constraints, and emerging issues

2. Assumptions, Constraints, and Goals

a. Assumptions

(1) Stockpile Quantities (START I & START II) from P&PD 98-0
(2) AWLPG covers FY 2001 through FY 2015 (15 years beyond budget call)
(3) Dismantlement backlog complete in FY 2002 (START I)
(4) Currently approved programs (such as Master Nuclear Schedule Vol. III or approved Mods or Alts already in process) are not included in this AWLPG.

b. Constraints

(1) SSMPEIS capacities used as a starting point only
  (a) Maximum of two weapon mods simultaneously
  (b) 300 total mods per year
(2) Schedules are requirements-driven as opposed to load leveled for convenience

c. Goals

(1) Identify LEO costs by weapon system
(2) Identify "phased costs" associated with multi-program activity
(3) Identify potential capacity (facility and/or personnel) shortages associated with planning workload
(4) Identify research and development timelines and activities leading to production

3. Life Extension Options

This section provides details on the LEOs for individual weapon systems. For each system, a narrative paragraph describes the potential LEOs for that system, indicating which component replacements are considered hard or soft drivers, and any emerging issues associated with that system. Finally, a spreadsheet (Table 1) lists each replacement component with notional engineering development, production, and weapon refurbishment start and stop dates, along with production rates and total quantities, and the location (field or Pantex) of the replacement action.

a. B61-3/4/10

The potential B61-3/4/10 LEOs, schedules, and quantities are shown in Table 1. None of the LEOs have been approved by the B61 POG. Pertinent comments and emerging issues are as follows:

1. The ALT 335/339 Add-On consists of additional ALT 335/339 conversions for the remainder of the Active Stockpile.

2. The common radar upgrade is the replacement of the current radar with the B83/B61 common design. Production is a continuation of the B83 radar production, with application to the B61-7/11 first, then to the B61-3/4/10. Current radar production uses sunset technology parts, and there are not enough parts to complete production for all B61s. Therefore, some engineering development is needed.

3. The hard drivers for the B61-3/4/10 are the neutron generator and the power supply. The power supply life was recently extended, so that the first units will expire in 2011.

4. The Excursion Case includes an ACORN transfer system for increased performance margin. Replacement of the NEP plastics causes the Excursion Case LEO to be done at the Pantex Plant.

b. B61-7/11

The potential B61-7/11 LEOs, schedules, and quantities are shown in Table 1. None of the LEOs have been approved by the B61 POG. Pertinent comments and emerging issues are as follows:

1. The common radar upgrade is the replacement of the current radar with the B83/B61 common design. Production is a continuation of the B83 radar production, with application to the B61-7/11 first, then to the B61-3/4/10. Current radar production uses sunset technology parts, and there are not enough

Table 1. -- START I Life Extension Options

Wpn Sys	LEO / Driver	Components	MC	Intrusion Level	Labs FSED Begin	Labs FSED End	Plants FPU Begin	Plants FPU End	Pantex Refurbishment Begin	Pantex Refurbishment End	LEO Description / Remarks
B61-3,4,10	A. Alt. 335/339 AS Add-on			2			2002	2003	(Field)		Done in conjuntion with LLCE
		TSSG			1999	2001					
		Junction Box (incl. LAC)									
		Preflight Controller									
		Filter Pack (Cover Plate)									
		Cables									
		Misc. Pads, Plastic, Foams, O-Rings									
	B. Common Rdr	Common Rdr		2	1997	2002	2003	2009	(Field)		Applied after B83 & B61-7
		Misc. Pads, Plastic, Foams, O-Rings									
	C. NGs & UC	NGs (New Small Tube)	MC3535		2007	2009	2011	2018	(Field)		
			MCxxxx	2	2008	2010	2011	2018			
					2008	2010	2011	2018			
	Excursion:	NGs & UC above plus:		4					2012	2019	Must be done @ PX due to NEP Plastics & IHE
		ACORN	MC ?		2004	2009	2011	2018			
		Programmer	MC3152				2011				
		Fwd/Aft Cases	MC3791/...				2011				
		NEP Plastics		4			2011				
		IHE		4			2011				
		Cables					2011				
		Misc. Pads, Plastic, Foams, O-Rings					2011				
B61-7,11	A. Common Rdr	Common Rdr		2	1997	1999	2000	2003	(Field)		Extend B83 production & apply to B61s
		Misc. Pads, Plastic, Foams, O-Rings									
	B. TSSG & CSA	TSSG	MC3640	2	2000	2002	2003	2007	(Field)		TSSG & CSA Refurbishment
		Junction Box w/ LAC	MC3616								
		Preflight Controller	MC3619								
		ICU	MC3638								
		CSA	B61		2002	2002	2003	2007			Mod-1 carryover
		MET	Alt.339-like								
		Function Sol. Switch									
		Cables									
		Misc. Pads, Plastic, Foams, O-Rings									
	C. NGs	NGs (New Small Tube)	MC3554	2	2007	2009	2012	2017	(Field)		
		Parachute	MC1837A		2010	2011	2012	2017			Mod-1 carryover
	Excursion:	NGs above plus:		4					2012	2017	Must be done @ PX due to NEP Plastics & IHE
		ACORN	MC ?		2004	2009	2012	2017			
		Programmer	MC3637			2011					
		NEP Plastics		4							
		IHE		4							
		Cables					2012	2017			
		Misc. Pads, Plastic, Foams, O-Rings									

DOE b(3)

DOE b(3)

DOE b(3)

DOE b(3)

DOE b(3)

The potential W78 LEOs, schedules, and quantities are shown in Table 1. None of the LEOs have been approved by the W78 POG. Pertinent comments and emerging issues are as follows

1. The CSA is included as a soft driver. The Fireset Assembly is included as a soft driver since a shortage of firesets will eventually prevent surveillance rebuilds.

2. For AWLPG purposes, a fireset modification is proposed instead of a new fireset design. The modification consists of modifying existing stocks of firesets from W68 and W76 and using them in the current W78 fireset. The cost of a new design fireset will be estimated in the W62 Life Extension Study.

3. The W78 POG is conducting a Joint Life Extension Study in FY 1998.

f. W80-0/1

The potential W80-0/1 LEOs, schedules, and quantities are shown in Table 1. Pertinent comments and emerging issues are as follows:

1. The desiccant is a hard driver in the W80, with the first units reaching end of life in 2006. A study is underway to more accurately predict the end of life, which may be extended by as much as 2 years. The W80 POG is already considering a LEO to replace the desiccant (ALT 346), and the POG set a date of 2004 for refurbishment to begin. However, Los Alamos has proposed an ACORN for the W80, with an FPU of 2006. For AWLPG purposes, the LEO date used is 2005, assuming that either the desiccant life can be extended or Los Alamos can pull up the ACORN FPU date.

2. The Excursion Case includes addition of MET into the W80. For MET to be a useful addition, the Air Force will have to modify aircraft electronics, to which they have not yet agreed.

g. B83-1

The potential B83-1 LEOs, schedules, and quantities are shown in Table 1. None of the LEOs have been approved by the B83 POG. Pertinent comments and emerging issues are as follows:

1. The R2/R3 field retrofit is planned for the B83, with the Mod 1s done before the Mod 0s.

2. The neutron generator is a hard driver in the B83-1, with the first units to be replaced in 2011. Neutron generators must be replaced at Pantex.

h. B83-0

Figure 1. -- Refurbishment Schedule

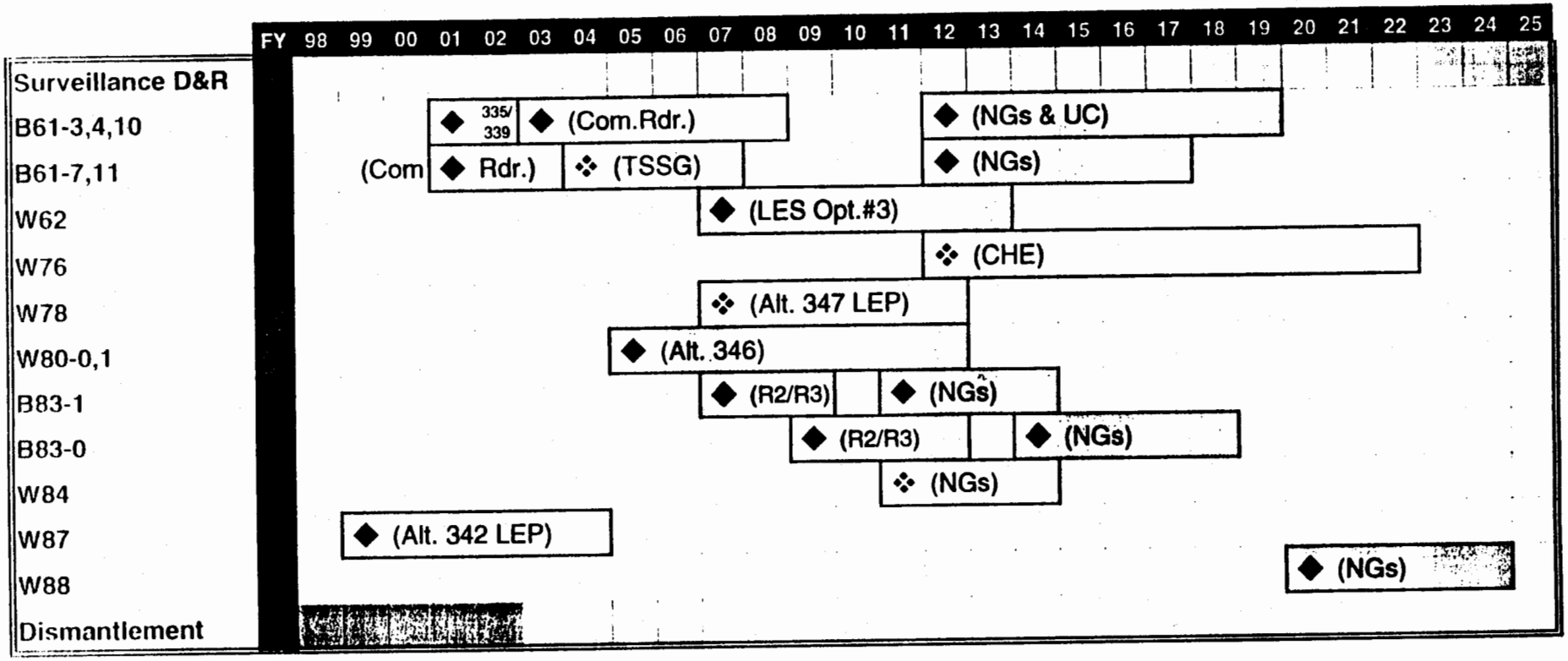

Begin refurbishment action: ◆ (Hard Driver)
❖ (Soft Driver)

Table 2. -- START I Schedule

Wpns Sys	LEO				FSED Begin	FSED End	KCP FPU	KCP LPU	PX FPU	PX LPU
B61-3,4,10	Alt.335/339 AS Follow-on	(Soft)		♦			2002	2003		
	Com. Rdr.	(Hard)		♦			2003	2009		
	NGs & UC	(Hard)	✔	◆			2011	2018	**2012**	2019
B61-7,11	Com. Rdr.	(Hard)		♦			2000	2003		
	TSSG (+CSA)	(Soft)		♦			2003	2007		
	NGs	(Hard)	✔	◆			2012	2017	**2012**	2017
W62	LES #2,3,5	(Hard)	✔	◆			2007	2013	**2007**	2013
W76	CHE	(Soft)	✔	❖	2008	2011	2011	2021	**2012**	2022
W78	Alt. 347 LEP	(Soft)	✔	❖			2006-07	2011-12	**2007**	2012
	Alt. 347 LEP plus	(Soft)		❖			2006-07	2011-12	**2007**	2012
W80-1	Alt. 346	(Hard)	✔	◆			1998-04	2009	**2005**	2011
	Alt. 346 plus	(Hard)		◆			1998-05	2009	**2005**	2011
W80-0	Alt. 346	(Hard)	✔	◆			2010	2011	**2011**	2012
	Alt. 346 plus	(Hard)		◆			2010	2011	**2011**	2012
B83-1	R2 & R3	(Hard)		♦			2006	2008		
	NGs	(Hard)	✔	◆			2010	2014	**2011**	2015
	NGs plus	(Hard)		◆			2010	2014	**2011**	2015
B83-0	R2 & R3	(Hard)		♦			2009	2010		
	NGs	(Hard)	✔	◆			2014	2017	**2015**	2018
	NGs plus	(Hard)		◆			2014	2017	**2015**	2018
	Convert to Mod-1	(Soft)		❖			2010	2024	**2011**	2025
W84	NGs	(Soft)	✔	❖	2006	2010	2010	2012	**2011**	2013
	NGs plus	(Soft)		❖	2006	2010	2010	2012	**2011**	2013
W87	Alt. 342 LEP	(Hard)	✔	◆			1999	2004	**1999**	2004
	ACORN	(Soft)		♦			2009	2014		
	IHE	(Soft)		❖			2034	2039	**2035**	2040
W88	ACORN	(Soft)		◆			2008	2012		
	NGs	(Hard)	✔	◆			2019	2022	**2020**	2024
	NGs plus	(Hard)		◆			2019	2022	**2020**	2024

DOE b(3)

DOE b(3)

Table 3. -- START II Schedule (with NO Augumentation)

(Changes to START I Scenario in *Italics*)

Wpns Sys	LEO				FSED Begin	FSED End	KCP FPU	KCP LPU	PX FPU	PX LPU
B61-3,4,10	Alt.335/339 AS Follow-on	(Soft)		♦			2002	2003		
	Com. Rdr.	(Hard)		♦			2003	2009		
	NGs & UC	(Hard)	✔	◆			2011	2018	**2012**	2019
B61-7,11	Com. Rdr.	(Hard)		♦			2000	2003		
	TSSG (+CSA)	(Soft)		♦			2003	*2005*	***2004***	*2006*
	NGs	(Hard)	✔	◆			*2013*	2015	***2014***	*2016*
W62	LES #2,3,5	(Hard)	✔	◆						
W76	CHE	(Soft)	✔	❖	2008	2011	2011	2020	**2012**	2022
W78	Alt. 347 LEP	(Soft)	✔	❖			*2009*	2011	***2010***	2012
	Alt. 347 LEP plus	(Soft)		❖			*2009*	2011	***2010***	2012
W80-1	Alt. 346	(Hard)	✔	◆			*2004*	*2010*	**2005**	2011
	Alt. 346 plus	(Hard)		◆			*2004*	*2010*	**2005**	2011
W80-0	Alt. 346	(Hard)	✔	◆			2010	2011	**2011**	2012
	Alt. 346 plus	(Hard)		◆			2010	2011	**2011**	2012
B83-1	R2 & R3	(Hard)		♦			2006	2009		
	NGs	(Hard)	✔	◆			2010	2013	**2011**	2015
	NGs plus	(Hard)		◆			2010	2013	**2011**	2015
B83-0	R2 & R3	(Hard)		♦						
	NGs	(Hard)	✔	◆						
	NGs plus	(Hard)		◆						
	Convert to Mod-1	(Soft)		❖						
W84	NGs	(Soft)	✔	❖	2006	2010	2010	2012	**2011**	2013
	NGs plus	(Soft)		❖	2006	2010	2010	2012	**2011**	2013
W87	Alt. 342 LEP	(Hard)	✔	◆			1999	2004	**1999**	2004
	ACORN	(Soft)		♦			2009	2014		
	IHE	(Soft)		❖			2034	2039	**2035**	2040
W88	ACORN	(Soft)		♦			2008	2012		
	NGs	(Hard)	✔	◆			2019	2022	**2020**	2024
	NGs plus	(Hard)		◆			2019	2022	**2020**	2024

DOE b(3)

DOE b(3)

Figure 5. -- Pantex START II Schedule

DOE b(3)

Figure 6. -- Y-12 START II Schedule

DOE 6(3)

5. Cost Estimating Guidelines

Cost estimating guidelines for the AWLPG are included with the budget call issued by BRMD, AL for the FY2000 budget. The SLEP AWLPG is Schedule No. 10 in the Special Schedules section of the budget call. The following six pages have been extracted from the Budget Call and have been included here for continuity. It is recognized that cost estimates may be less accurate with incomplete product definition and projection into the future.

Phased costs (by year) costs are to be estimated on a per year basis, not just a single total for each program.

6. Due date

Cost estimates for this AWLPG should be submitted to AL along with the normal budget call responses.

APPENDIX B

Component Unit Costs

Direct Labor (Component Unit Basis)

This component unit cost is the procured cost, which is expended directly upon the materials comprising a finished product for fabrication, assembly and in-line inspection and evaluation. It should be developed on a component or piece-part basis, using the latest available engineered or historical direct labor hours for each component. It includes labor for nonproductive time (including annual, holiday, and sick leave), labor lost through scrap or from in-plant attrition.

Direct Support (Component Unit Basis)

This component unit cost should include all of the support costs that are variable with production. This primarily includes fringe benefits, overtime shift differential, termination costs, other manpower costs, and supplies and services related to fabrication assembly, in-line inspection and evaluation direct labor. It also includes the manufacturing operation direct support (salaries and wages, fringes, other manpower costs, and related supplies and services) that can be directly identified to a specific weapon system for fabrication, assembly, in-line inspection and evaluation and quality supervision and control.

Direct AFC (Component/Unit Basis - AFC Only)

This component unit cost should include all of the life of production allowance for change relating to base costs for direct material, direct labor, direct fringe, and direct support. The unit cost provided should represent the estimated allowance for change cost of delivering one more weapon's worth of good components to the next user.

Note: Direct labor hours should correspond with the fabrication, assembly, in-line test and inspection costs reported in direct labor costs.

The format of the CUC report follows on page B-3. Production site's or site's with touch labor work are responsible for filling in columns 8-14 for work that they will complete. DOE and the Design Laboratory(s) are responsible for columns 1-7. Each CUC will begin with columns 1, 2, 4, 5, 6, and 7, filled out by the Design Laboratory(s) with an initial review of the proposed CUC by DOE AL Weapons Production Division and Budget and Resources Management Division. The "Level Number " will not be filled in until all the CUC reports are received by DOE from the sites. The following definitions should be used to accurately report the information in columns 1-7.

Nomenclature

The nomenclature of the part should be the "street name" of the part that was developed to allow the weapons community to speak about the part without being in a classified setting. Do not use the real name of the part where a street name has been established.

Part Number

The part number refers to the MC number or Drawing Number or if these aren't available the look alike part MC number or commercial vendor name.

Production Site

The name of the site that will complete the work or procure the designated part from an outside vendor.

UNCLASSIFIED

APPENDIX B

Component Unit Costs

User Site

This is the site that will use the part in the higher level assembly. If the part is an integral part of a completed lower level assembly that is not complete without the part then the part is a part of that lower level assembly and the user site listed should be the site that is completing the lower level assembly. In other words, the production site and user site may be the same.

Lab

Lab refers to the Design Laboratory for the specific part.

UNCLASSIFIED

5. Cost Estimating Guidelines

Cost estimating guidelines for the AWLPG are included with the budget call issued by BRMD, AL for the FY2000 budget. The SLEP AWLPG is Schedule No. 10 in the Special Schedules section of the budget call. The following six pages have been extracted from the Budget Call and have been included here for continuity. It is recognized that cost estimates may be less accurate with incomplete product definition and projection into the future.

Phased costs (by year) costs are to be estimated on a per year basis, not just a single total for each program.

6. Due date

Cost estimates for this AWLPG should be submitted to AL along with the normal budget call responses.

UNCLASSIFIED

APPENDIX B

Component Unit Costs

Component Unit Costs Reports (CUC) are prepared throughout the year for special studies leading to LEP's, production of WR like components and JTAs.

Special Studies & Price Estimates

Component Unit Cost information should summarize the cost estimate of work to be completed on each assembly, subassembly, or component of the subject weapon system, JTA, and REST activities. The level of detail included will be decided by WPD with inputs from the project group charged with conducting the study. Generally, this information will include the cost of direct material, direct labor, direct fringe, direct support, and direct allowance for change (AFC). The component unit cost will provide cost data to the project group, which will be used for design/cost trade-off's and provide increased visibility of the cost to produce a weapon system as the design evolves. Since this data will also be used for budget and program analysis purposes, the same assumptions in regard to design, first user, make/buy, etc. used in pricing out the budget should also be used in calculating the component unit cost.

On Per-Unit Basis

The CUC report will be completed on a basis of producing one more weapons worth of WR components to the next user. The component unit cost calculated by each contractor will include only its own incurred costs, including overbuild for in-plant attrition. The component unit costs will not include the cost of system-furnished material used in the manufacturing process or consumed in D-test.

GUIDANCE

Direct Unit (direct material, direct labor and direct support)

No preproduction activities: TMS, pilot production, etc.
No ETUs
No Type Ss
No qualifications
No out-of-plant activities
No actuals

Direct Tooling

Not required for this submission.

Direct Production/Process Engineering

Not required for this submission.

Definitions

Direct Material (Component Unit Basis)

This component unit cost should be developed on a component or piece-part basis, using the latest available standard for a weapon's worth of each component or piece part. (If procurement is complete on a component, then use the last price paid for the item.) It should include all material (both material for in-house fabrication and vendor-procured components) that form an integral part of a finished product and includes material lost through scrap, and in-plant attrition. Material that is needed for the completion of a product, but whose consumption with regard to product is either so small or so complex that it would be futile to treat it as a direct material, should be classified as direct support costs.

UNCLASSIFIED

Schedule 10

SLEP Cost Studies
Component Unit Cost Data
Total Report

Nomenclature	Part No.	Level No.	Production Site	User Site	Lab	QTY	Direct Material	Direct Labor	Direct Fringe	Direct Support	Subtotal	Direct AFC	Total Direct

Stockpile Life Extension Programs
Budget Requirements
($ In Thousands)

	Current Estimate					Total Current Estimate	Prevoius Estimate	Change
	CY FY 97	CY+1 FY 98	BY FY 99	~	EOP FY XX			
Unit Related								
Direct Labor								
Direct Materials								
Direct Fringes								
Direct Support								
Total Unit Related								
AFC								
System Related								
Direct P&P E								
Direct Tooling								
Capital Equipment								
T & H Gear								
Direct Preproduction Activities								
TMS (tool made sample)								
PPI (process prove in)								
Pilot Production								
Qualification								
Total System Related								
Indirect								
TOTAL								