DISTRIBUTION:

1/50A	P. J. Larsen
2/50A	R. W. Henderson
3-4/50A	R. A. Bice
5/50A	J. A. Hoffman
6/50A	A. B. Machen
7/50A	P. F. Meigs
8-10/50A	R. P. Petersen
11/50A	G. P. Kraker
12/50A	G. A. Fowler
13/50A	F. H. Longyear
14-15/50A	L. J. Paddison
16-19/50A	LA Document Room
20/50A	H. E. Grier
21-28/50A	DMA
29-38/50A	AFSWP
39/50A	C. L. Tyler
40-50/50A	Document Room File

30 Sept
BEP

UNCLASSIFIED

PREFACE

This report presents the latest evaluation of the design and performance of the Mk IV Mod 0 FM bomb. The report is a sequel to SL-12, the preliminary evaluation report, and is based on an analysis of more complete test data than were then available.

Mk IV Evaluation Committee

J. A. Hoffman, Chairman
A. N. Ayers
R. A. Bice
J. J. Dawson
L. A. Hopkins
C. F. Robinson
C. E. Runyan
R. E. Schreiber
L. W. Schulz
L. D. Smith

 UNCLASSIFIED

CONTENTS

		Page
(I).	INTRODUCTION	6
	(A). Tactical Assembly Concepts	7
	(B). Ruggedization, Reliability, and Safety	8
	(C). Ballistics	8
	(D). Comparative Description of Bombs	9
(II).	MK IV MOD 0 FM BOMB	20
	(A). Over-All Design of Bomb	20
	(B). Outer Case	31
	(C). Sphere (High-Explosive Container)	35
	(D). Ballistic Design	39
	(E). Electronic Cartridge	50
	(F). Electrical Fuzing and Firing System	54
	(G). Detonators	83
	(H). High-Explosive Charge Assembly	86
	(I). Systems Reliability Analysis	88
	(J). Nuclear Components	92
(III).	BOMB ASSEMBLY AND TEST EQUIPMENT	97
	(A). Functional Use, Design Requirements, and Discussion	97
	(B). Comparison with Mk III Mod 0 Bomb	100
(IV).	SUMMARY	101
(V).	CONCLUSIONS AND RECOMMENDATIONS	103
(VI).	FUTURE PROGRAMS FOR THE MK IV FM	105
	(A). Lightweight Outer Case	105
	(B). New Electronic Cartridge	106

LIST OF ILLUSTRATIONS

		Page
Fig. 1.	-- Mk IV and Mk III FM Bombs Assembled	10
Fig. 2.	-- Side View of Mk IV Bomb	11
Fig. 3.	-- Front View of Mk IV Bomb	12
Fig. 4.	-- Plan View of Fin and Rear View of Cartridge	13
Fig. 5.	-- Rear View of Mk IV Bomb	14
Fig. 6.	-- Exploded View of Mk III Bomb	15
Fig. 7.	-- Breakdown of Major Components of Mk IV and Mk III Bombs	16
Fig. 8.	-- Field Assembly Breakdown of Mk IV and Mk III Bombs	17
Fig. 9.	-- Field Assembly Breakdown of Mk IV and Mk III Bombs	18
Fig. 10.	-- 20-mm Model, DWLP Fins; M = 0.871	47
Fig. 11.	-- 20-mm Model, DWLP Fins; M = 0.900	48
Fig. 12.	-- 20-mm Model, DWLP Fins; M = 0.923	49
Fig. 13.	-- Cartridge Containing Fuzing and Firing Components	51
Fig. 14.	-- Cartridge Containing Fuzing and Firing Components	52
Fig. 15.	-- Simplified Firing Circuits	55
Fig. 16.	-- Mk IV X-Unit	57
Fig. 17.	-- Drop Sequence for the 1561 FM Atomic Bomb	62
Fig. 18.	-- Drop Sequence for the Mk IV Mod 0 Atomic Bomb	63

ABBREVIATIONS

DWLP	Double-Wedge Large-Plan Fin
LPW	Large-Plan Wedge Fin
TFS	Thin-Fin Wedge with Wedge Shroud
Mk	Mark
Mod	Modification
FM	Fat Man -- Code term for implosion-type weapon
HE	High Explosive

(2). To make a more reliable and more rugged bomb.

(3). To improve the bomb ballistics.

(A). Tactical Assembly Concepts

The initial design of the Mk IV FM was very strongly affected by tactical considerations. The major purposes of designing this bomb were to construct a weapon which, in the field, would require a minimum of skilled personnel, a minimum of time for checking and testing individual components, and a minimum of test and handling equipment.

These aims were achieved (a) by placing the fuzing and firing components in one cartridge which plugs in, automatically completing the detonator circuit, and (b) by redesigning the outer case to provide ready access for installing detonators and inserting the active material.

b(3
DOE

As a result of this tactical approach to the design problem, it now is necessary in the field only to remove the antenna noseplate, the tail plate, the cartridge, the split-band, and the trap-door components to make a complete check and final assembly. In contrast, the Mk III series bombs must be almost completely disassembled and reassembled in the field. If tactical considerations permit, forward field techniques may be still further simplified by assembling the detonators to the bomb before it goes forward and by abbreviating field electrical tests.

(B). Ruggedization, Reliability, and Safety

Because field experience has shown that several components of the Mk III FM -- particularly the fuzing and firing components -- are susceptible to damage by normal handling, extreme care is necessary to maintain bomb reliability. Simplicity of design reacts favorably on all three factors: ruggedization, reliability, and safety. In the Mk IV a major gain toward simplicity was made in the firing component (X-Unit) over that employed in the Mk III Mod 0 bomb. Probable gains in reliability have been made in the Battery Box and Junction Box through designs of proved ruggedness. The Archie radar fuze sets, which were carried over into the new bomb from the Mk III FM, are now mounted on vibration isolators to make them less susceptible to damage in handling and use. Additional improvements have been made to insure proper functioning of electrical components under extreme operating conditions.

(C). Ballistics

A new ballistic shape, incorporating lift rather than drag stabilization, was developed for the Mk IV FM. When released under B-29 dropping conditions, this new aerodynamic design resulted in:

(1). An improvement of the ballistic coefficient for range from 1.2 to 3.0 and of the ballistic coefficient for time from 1.2 to 2.3.

(2). A decrease in the maximum ballistic yaw from 12 degrees to 3 degrees.

b(1)
DoD

(4). A reduction of bomb vibration.

Data from twenty-five full-scale drop-tests correlated with data from wind-tunnel and firing-range tests have demonstrated that the original ballistic design criteria are satisfied by the Mk IV Mod 0 FM bomb.

(D). Comparative Description of Bombs

Figure 1 shows the Mk IV and Mk III FM bombs assembled. It will be noted that in external appearance the Mk IV is much cleaner in design. The ellipsoid and tail fittings, the antennas, and the bomb lug have been eliminated as protuberances. The lug is recessed, and the antennas are flush-mounted in the noseplate. The complex box tail of the Mk III has been replaced by four airfoil-type fins.

Figures 2 through 6 illustrate the weapons and their components, and Figure 7 compares the breakdown of major components of the two weapons. The difference that is most readily apparent is the placement and mounting of the electronic fuzing and firing equipment into one easily removable cartridge rather than on cones placed on opposite sides of the sphere. A study of these pictures will identify the corresponding components of the two weapons.

Figure 8 illustrates and compares the field assembly breakdown of the weapons. In this figure the split-band is removed from the Mk IV for installation of the detonators. The comparison clearly illustrates the greater simplicity in field assembly of the Mk IV.

Figure 9 illustrates and compares the field assembly breakdown of the weapons when the detonators are installed in the Mk IV at the rear base. It can be seen that further simplification is achieved if the detonators are installed before the bomb goes forward.

UNCLASSIFIED

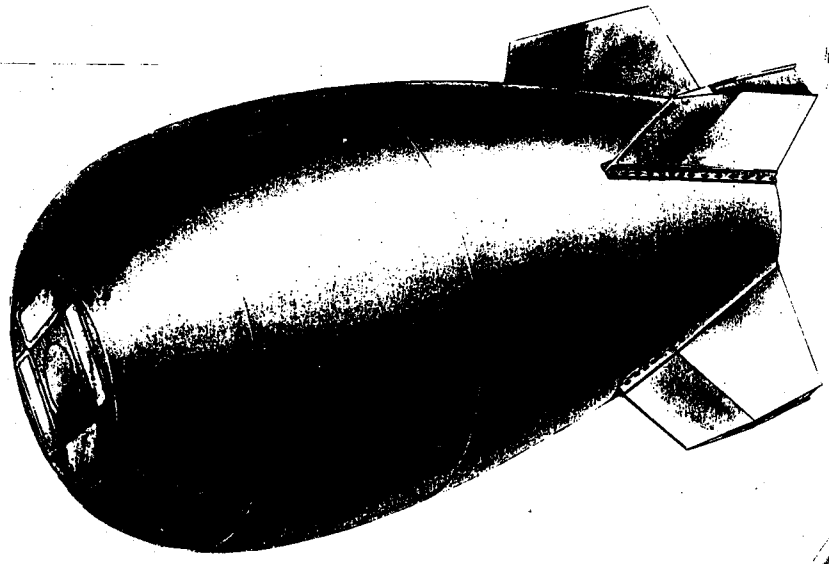

MK IV MOD 0 FM

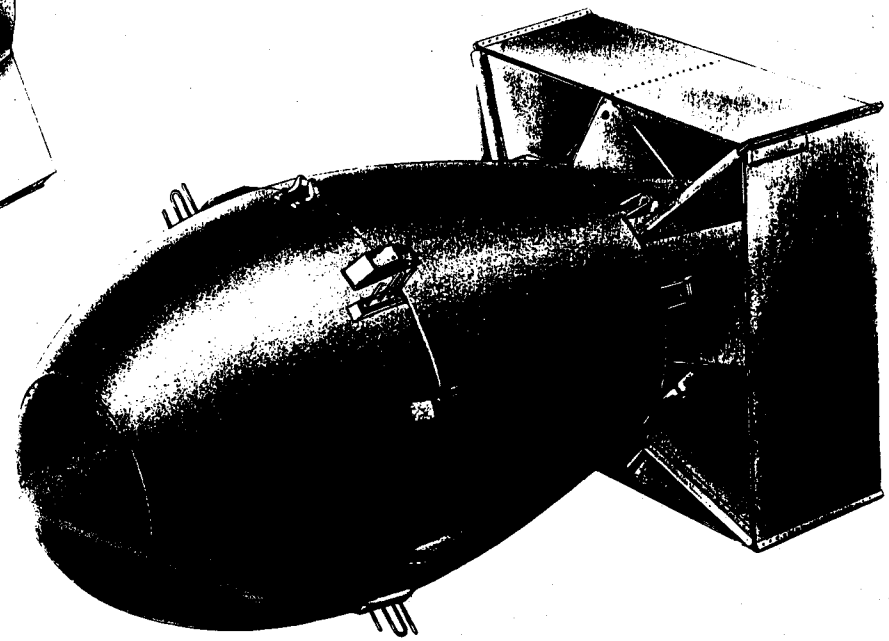

MK III MOD 0 FM

Fig. 1. -- Mk IV and Mk III FM Bombs Assembled

UNCLASSIFIED

DOE
b(3)

- Side

- 1

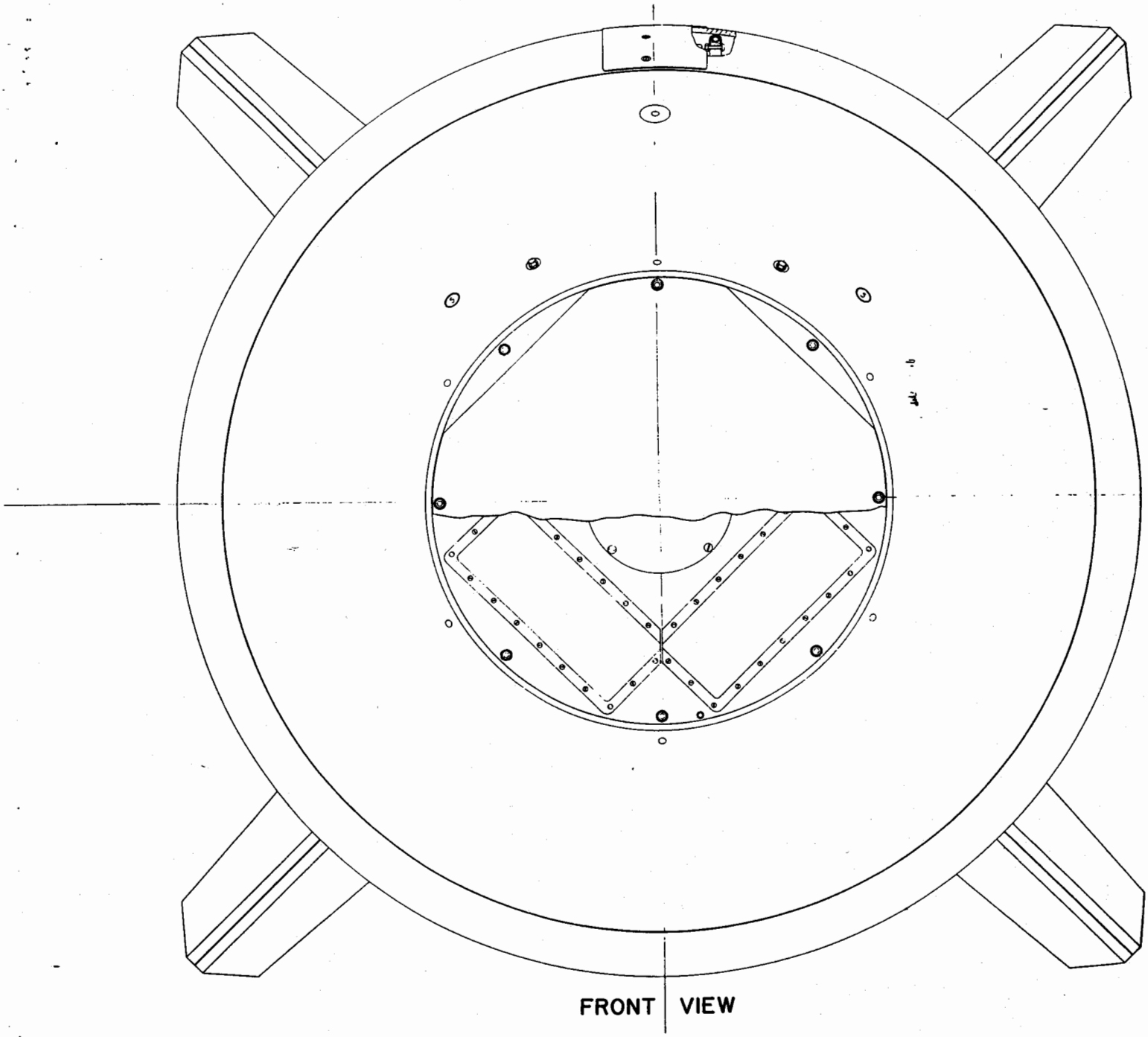

Fig. 3. -- Front View of Mk IV Bomb

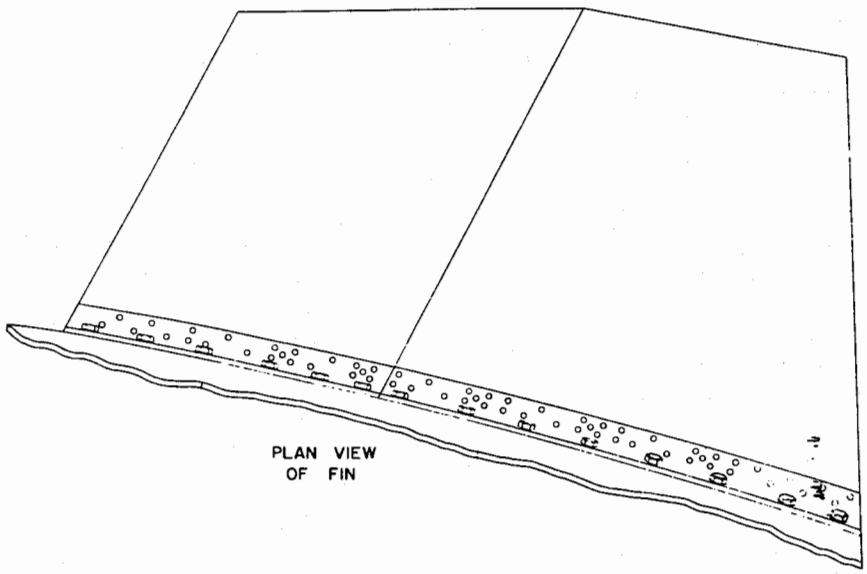

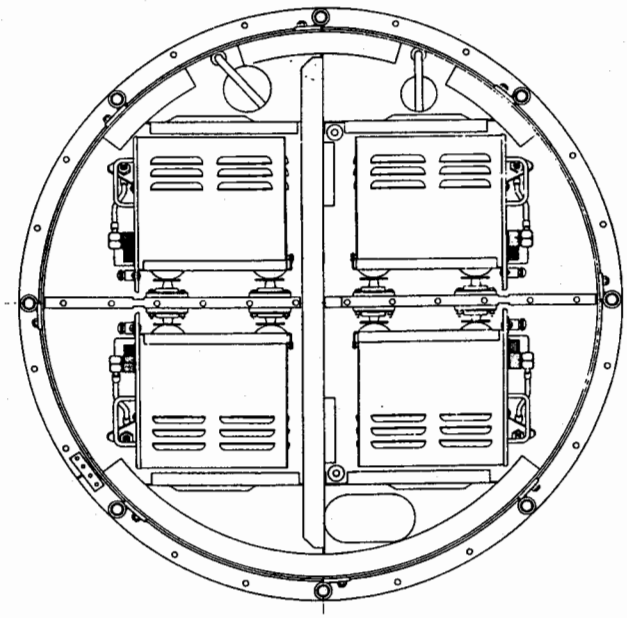

REAR VIEW OF CARTRIDGE
WITH END PLATE REMOVED

Fig. 4. -- Plan View of Fin and Rear View of Cartridge

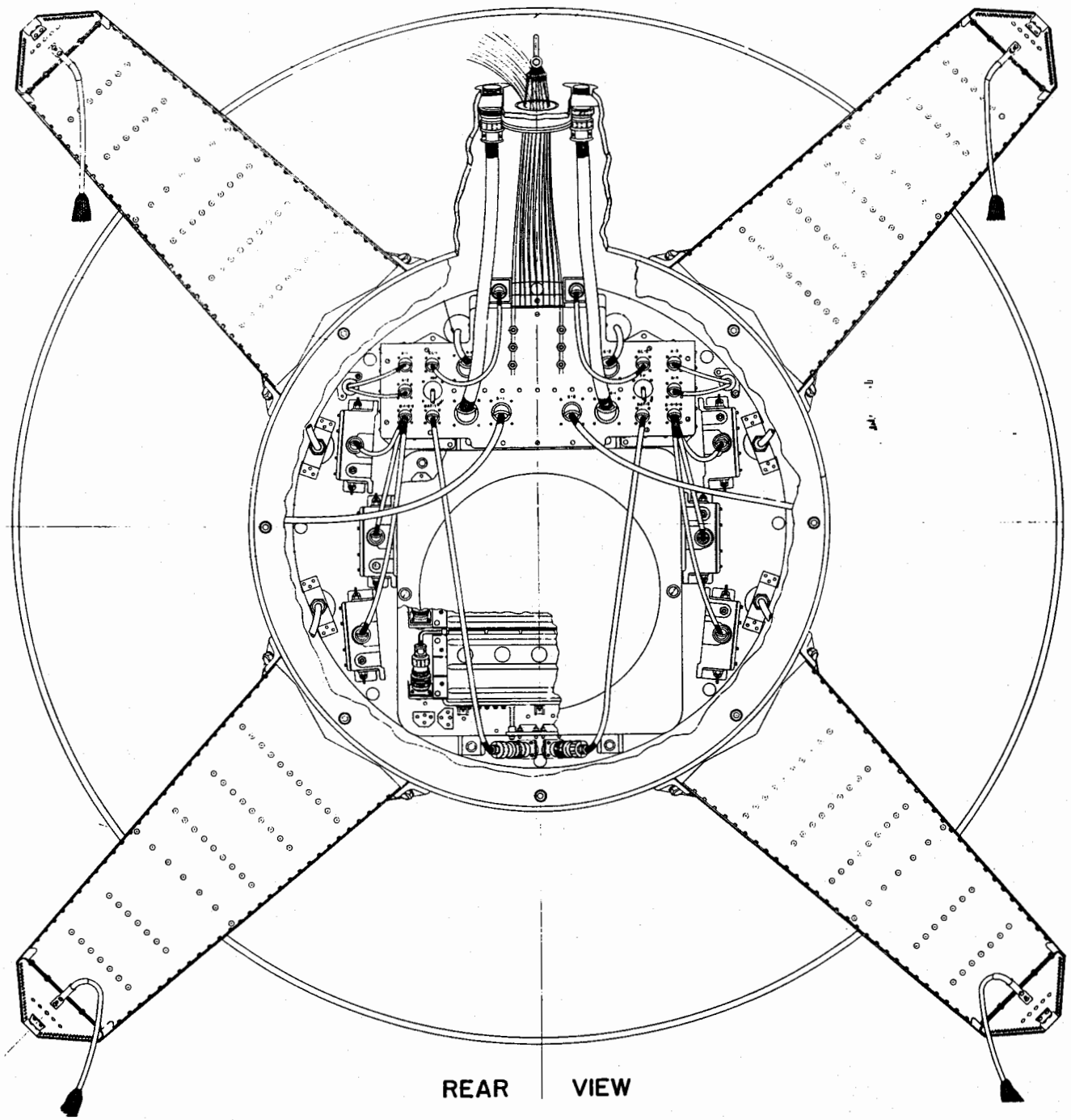

Fig. 5. -- Rear View of Mk IV Bomb

[redacted]

b(3)
DOE

Fig. 6. -- Exploded View of Mk III Bomb

UNCLASSIFIED

Fig. 7. -- Breakdown of Major Components of Mk IV and ~~Mk III~~ Bombs

UNCLASSIFIED

UNCLASSIFIED

FIELD ASSEMBLY BREAKDOWN MK III MOD 0 FM

[redacted]

Fig. 8. -- Field Assembly Breakdown of Mk IV and Mk III Bombs

b(3)
DOE

UNCLASSIFIED

UNCLASSIFIED

FIELD ASSEMBLY BREAKDOWN MK III MOD 0 FM

Fig. 9. -- Field Assembly Breakdown of Mk IV and Mk III Bombs

b(1)
DOE

UNCLASSIFIED

(II). MK IV MOD 0 FM BOMB

(A). Over-All Design of Bomb

(B). Outer Case

(C). Sphere (High-Explosive Container)

(D). Ballistic Design

(E). Electronic Cartridge

(F). Electrical Fuzing and Firing System

(G). Detonators

(H). High-Explosive Charge Assembly

(I). Systems Reliability Analysis

(J). Nuclear Components

(II). MK IV MOD 0 FM BOMB

(A). OVER-ALL DESIGN OF BOMB

(1). Functional Use and Design Requirements

The Mk IV Mod 0 FM is an implosion-type atomic bomb based upon the same fundamental principles of nuclear fission as those of the Mk III FM. It incorporates an improved fuzing and firing circuitry over that in the Mk III Mod 0 weapon and the same basic circuitry as that in the Mk III Mod I weapon. The bomb was re-engineered to provide for greater ruggedness, greater dependability, easier field techniques, and better ballistic performance than either of the Mk III versions.

In addition to the detailed discussion of these various factors presented in later sections of this chapter, the following general requirements, which apply to the entire bomb, are discussed in this section.

(a). The bomb must withstand expected flight and handling loads.

(b). The bomb must withstand atmospheric conditions as required for storage and operation.

(c). The external dimensions of the bomb must be kept within the box dimensions of the Mk III FM and must be such that the bomb will fit into a B-29 bomb bay.

(2). Discussion, Tests, and Calculations

(a). Flight Handling Loads. -- Calculations and tests indicate that the bomb will withstand the following load factors shown in the memorandum "Minutes of Meeting to Establish Load Factors for '41'," (Ref SLE-3-1477): 1,2

Airplane Flight Loads

	Limit	Ultimate (S.F. = 1.5)
Vertical	4.67 down	7.0 down
	2.0 up	3.0 up
Longitudinal	4.0 aft	6.0 aft
	5.33 fwd	8.0 fwd
Lateral	2.0	3.0

Free Flight Loads

A resultant static fin load equal to the weight of the bomb and located 1/3 of the fin height from the base of the fin.

Ground Handling

	Limit	Ultimate
Vertical	+4	+6
	-2	-3 (based on trailer weight)
Longitudinal	6	9
Lateral	2	3

The bomb is designed to withstand normal handling load factors while being assembled or while being transported by any practicable surface or air means. An empirical standard of vibration testing of 10 to 55 cps constant amplitude at 10 g maximum acceleration for 45 minutes in each of three

mutually perpendicular planes has been adopted for certain components. Although complete knowledge of transport vibration is not available at this time, some data have been received.

Additional information is being obtained and a study is in progress to determine the application of this information to design.[3,4] Present calculations and experience show that the bomb has adequate factors of safety to withstand all but the most exceptional transport loads. Vibrations recorded during drop tests indicate that all components have adequate factors of safety for free flight conditions.[5] Actual drop tests with HE have not been made.

There has been considerable experience in the use of assembled test bombs without any failures caused by normal handling.

A Mk IV Mod 0 FM unit loaded with dummy charges and electrically functional was subjected to abnormal handling when the trailer on which the unit was being towed broke down. An electrical check and inspection of the unit was made after the accident. Aside from fin damage and minor scratches on the outside of the case, no failures were found.[6]

(b). Environmental Limitations. -- The original engineering concepts of atomic bombs required that each unit be handled under specific, carefully controlled conditions in both storage and use. The growth of storage and tactical philosophies has created the desire to provide for the storage and use of atomic weapons under highly adverse atmospheric conditions. The Mk IV FM partly fulfills this long-range development ideal. A chart showing the recommended limiting environment for components is shown on pages 27-29.

(1). Long-Term Storage (Nonoperational). -- It is estimated that the components of the unit in long-term dead storage can withstand temperatures ranging from -40°F to 149°F with the exception of the HE assembly (long-term high temperature of 95°F to 100°F maximum, and slow rate of temperature change). For long-term storage most of the components should not be exposed to relative humidities greater than 40 per cent; all components are therefore packaged to provide protection against moisture. All components except the nuclear material, batteries, detonators, and

cartridge are stored in the bomb case. The assembled bomb case, which is stored in a crate, breathes through one desiccator port. A desiccant is placed inside the case for protection against moisture. All other components are packaged under Method II A (dry-air technique). By this method the item is packaged in a moisture-proof barrier along with a sufficient amount of desiccant.

(2). Exposure During Assembly. -- The relative humidity in the assembly area should not be greater than 50 per cent at 80°F.

(3). Exposure of Completely Assembled Bomb. -- It is estimated that the assembled bomb can be exposed to temperatures as low as -40°F for at least as long as the life of the desiccators (approximately two weeks) provided the battery temperature is increased to above 0°F before use. It is also estimated that the bomb, less its nuclear components, can be exposed to 120°F for two weeks. With nuclear components, the bomb can be exposed to temperatures up to 120°F for three days and up to 105°F for two weeks.

Leakage tests indicate that the outer case sealing will protect the assembled bomb from exposure to relative humidities up to 100 per cent for moderately long periods providing the desiccators are replaced when necessary (every two weeks).

(4). Operational - General. -- Drop tests of the Mk IV Mod 0 FM as well as laboratory component tests have indicated that the bomb will operate satisfactorily at temperatures ranging from -40°F (with heaters functioning in the clock bank and battery box) to 120°F, at pressures ranging from atmospheric to 7 psi, and at relative humidities of 80 to 90 per cent.

The temperatures of the internal components at detonation is not definitely known; it is expected, however, because of the short time of fall, that the temperatures will be very close to those at the time of release. Tests indicate that the temperature inside the bomb bay with a Mk III Mod 0 bomb in it will stabilize at about 25°F to 28°F above free air temperature (Ref SMD-575, Preliminary Investigation of B-29 Bomb Bay Temperatures). Tests on a Mk III Mod 0 bomb indicate that it takes at least four hours for the temperature of the internal components to reach -40°F when the temperature of the air to which the bomb is exposed is rapidly changed from 70°F to -65°F (Ref SMD-435, Low Temperature Tests of a Nagasaki-type Bomb). These tests also indicate that it takes at least eight hours for the temperatures of the internal components to change from 70°F to -65°F when the air temperature is -65°F. On the basis of the results of these tests, it is believed that the temperature of internal components will not be below -40°F when free air temperature at altitude is -65°F or above.

(c). Dimensional Limitations. -- The over-all dimensions on the bomb were limited to the box dimensions (60 x 60 x 128 inches) of the Mk III FM, and were to be such that the bomb would fit in a B-29 bomb bay. Tolerances on drawings allow the external diameter of the bomb to exceed 60 inches by 0.16 inch. The bomb fits into the bomb bays of the B-29, B-50, AJ-1, and B-36 airplanes. The distances between the fin guide rails in the B-29 bomb bay dictated, for clearance purposes, a 59-inch box dimension for the fins.

The total weight of the bomb is 10,900 ±240 pounds, and the cg is 43-7/16 ± 1/4 inches from the nose; the transverse moment of inertia is approximately 9,400,000 in.^{2} lbs and the polar moment of inertia is approximately 4,400,00 in.^{2} lbs. Component weights of one unit are tabulated on page 30.

(d). Other Limitations. -- The unit, less its nuclear material, after being tested and assembled, can be dispersed for a period of two weeks without rechecking. Two weeks is the estimated life of the desiccators. The batteries will maintain proper charge for a period of three weeks.

There are four airplanes which can accommodate the bomb at present, the B-29, B-50, AJ-1, and B-36. Satisfactory ballistic drop-tests have also been made from the B-47, but as yet it is not wired for making the electrical checks required in flight.

The best predictable results can be obtained in all drops that are made from an altitude of 32,000 feet at normal B-29 release velocity (310 mph true air speed). However, satisfactory drops can be made at altitudes up to at least 40,000 feet and at release velocities up to 0.8 Mach number.

Drop data indicate a trend in the increase of baro-switch pressure of approximately 440 feet altitude per 100-mph true air speed increase in release velocity. For normal B-29 drops this effect is so small as to make it impracticable to correct the baro-switch setting. However, if release velocities vary over a wide range, corrections should be made.

No definite effect of variation in release altitude from 32,000 to 40,000 feet has been noted from tests conducted to date. There is an indication that lower release altitudes may cause baro switches to close at higher than normal altitudes. Insufficient data exist at this time to establish definitely the effect of variation in release altitudes upon baro-switch closure. Baro-switch closure can, however, be most closely predicated at drops from 32,000 feet. Consideration should therefore be given to making drops at or near this altitude whenever radar jamming is expected.

Weather limitations during drops are not accurately known; however, it might be expected that all-weather use of this weapon can be made only at the possible expense of performance.

Atmospheric turbulence, with rare exceptions, will affect the ballistic accuracy of the bomb by only 100 to 200 feet. If unpredicted ballistic winds, such as might be encountered in a cumulus cloud, reach 100 mph or more, the impact point may vary as much as 1000 feet.

Present indications are that a fairly large reduction in blast efficiency may result from detonation in rain or fog. The probability of the Archies' ranging on clouds is very low.

The effects of icing during a drop are not definitely known. The ballistic performance, antenna operation, and baro-switch operation may be affected to a certain degree by accretion of ice upon the unit. However, on the basis of existing limited knowledge, it is believed that the probability of detrimental effect of icing is low unless severe icing conditions are encountered.

(e). Dependence upon Personnel Performance. -- The simplicity of the design of the Mk IV Mod 0 FM and the reduction of necessary assembling and testing in the field greatly lessen the probability of human error; therefore the quality of personnel in the field need not be as good as that required for the Mk III without sacrificing reliability. However, because of the importance of proper functioning of this weapon, all operations should be performed by thoroughly trained personnel.

UNCLASSIFIED

Chart of Recommended Limiting Environment for Mk IV Mod 0 Components
(Values based upon calculations, tests, and/or estimates)

Item	Mechanical Strength	Temperature				Relative Humidity		Pressure		Vibration
		Short Term		Operational		Short Term	Operational			
		High	Low	High	Low			High	Low	
(A). Outer Case										
(1). Rear Case (Attaching Bolts)	12,000 lbs on each of two fins; MS = 0.28									
(2). Split Band (Welded Bolt Lugs -- based on yield strength of bolts)	MS = 0.06									
(3). Forward Case (Attaching Bolts)	MS = 5.25 for 5-g load factor									
(4). Antenna Noseplate		+150°F	-67°F	+150°F	-67°F			10 psi differential		10-55 cps; 10 g max; 90 min in each of 3 planes
(5). Fin										
Calc Total Load	MS = 0.45 for 12,000-lb load, 16,700 lbs at failure									
Test Total Load										
(B). Sphere										
(1). Bursting Strength	MS = 34.4 at 41 psi									
(2). Segment Bolts	MS = 5.1 at 41 psi									
(3). Trunnion Attachment	MS = 7.7 for 3-g load factor									
(4). Lug Attachment	MS > 0.033 for 7-g load factor									
(5). Lug	MS = 0.31 for 7-g load factor (neutralized by local plastic bearing failure until actual stress equals allowable)									
(C). Electronic Cartridge		+149°F	-40°F	+149°F	-40°F	50%	80-90%		3 psi or lower	10-55 cps; 10 g max; 30 min in each of 3 planes (cartridge body)
(1). Calc Cantilever Strength	MS = 13.0 for 10-g vibratory load factor									
(2). Cartridge Attachment	MS = 3.1 for 10-g vibratory load factor									
(3). Junction Box Attachment	MS = 5.2 for 10-g vibratory load factor									
(4). Battery Box Attachment	MS = 21.0 for 10-g vibratory load factor									
(D). X-Unit		+149°F	-65°F	+149°F	-22°F Spec -40°F Test	50%	80-90%		7 psi Spec 3 psi Test	10-55 cps; 10 g max; 45 min in each of 3 planes

$$\text{Margin of Safety, MS,} = \frac{\text{allowable load}}{\text{applied load}} - 1$$

UNCLASSIFIED

UNCLASSIFIED

Chart of Recommended Limiting Environment for Mk IV Mod 0 Components (Cont)
(Values based upon calculations, tests, and/or estimates)

Item	Mechanical Strength	Temperature				Relative Humidity		Pressure		Vibration
		Short Term		Operational		Short Term	Operational			
		High	Low	High	Low			High	Low	
(E). Junction Box		+149°F	-40°F or below	+149°F	-40°F or below	50%	80-90%		3 psi or lower	10-55 cps; 10 g max; 45 min in each of 3 planes
(F). Archie		Estimated +149°F or above	-40°F	Estimated +149°F or above	-40°F	50%	Estimated 80-90%		3 psi or lower	Mounted for vibration isolation
(G). Battery Box with filled Batteries		+120°F (2-week test)	-4°F (3-day test) -40°F or lower if battery temp is stabilized above -4°F before use	+149°F	-4°F -40°F or lower with heaters	50%	90-100%		3 psi or lower	10-55 cps; 7 g max; 45 min in any of 3 planes
(H). Baro Switch		+120°F or above	-65°F	(Variation from -65°F to +120°F causes max error of 1520 ft below to 590 ft above set altitude)		50%	80-90%	Below -1430 ft alt	Above 30,000 ft alt	10-55 cps; 10 g max without failure. Vibration caused appreciable chatter.
(I). Desiccator		+350°F	-65°F	+350°F	-65°F	100%	100%			10-55 cps; 10 g max; 15 min in each of 3 planes
(J). Detonator						50%	80-90%			

UNCLASSIFIED

Chart of Recommended Limiting Environment for Mk IV Mod 0 Components (Cont)
(Values based upon calculations, tests, and/or estimates)

Item	Mechanical Strength	Temperature				Relative Humidity		Pressure		Vibration
		Short Term		Operational		Short Term	Operational			
		High	Low	High	Low			High	Low	
(K). HE										
(1). Without Nuclear Material		+155°F for short periods; +120°F for moderately long periods. +95 to +100°F for long-term storage.	No definite limit; slow rate of temperature change.							
(2). With Nuclear Material		+120°F for short period; +105°F for 2 weeks.	No definite limit; slow rate of temp change.	+120°F	No definite limit.					
(L). Nuclear Components	210-lb load in bending, compression, and tension									100,000 stress reversals; 10 to 60 cps; amplitude of 0.016 in.

Long Term: Exact information on long-term storage can only be obtained over a long time. It is estimated that all components except HE can withstand temperatures ranging from +149°F to -40°F. The upper temperature limit of HE is 95°F to 100°F. All components are packaged for protection against moisture.

UNCLASSIFIED

Component Weight Breakdown of Mk IV Mod 0 FM

Item	Weight (lbs)
Completely Assembled Unit	10,866

b6

b6

DOE

(B). OUTER CASE

(1). Functional Use and Design Requirements

The outer case of the bomb serves to provide

(a). An adequate structural member on which the tail fins and antennas can be mounted;

(b). A housing for protecting the internal components against damage from handling, weather, and low-velocity fragment damage; and

(c). A suitable ballistic contour.

In addition to performing those functions, the case has the following design requirements to meet:

(a). Accessibility must be provided to the detonators on the sphere with a minimum of disassembly in the field.

(b). Easy removal of the electronic cartridge containing the fuzing and firing equipment must be provided.

(c). Accessibility must be provided for insertion or extraction of the nuclear material by handling a minimum number of relatively small and lightweight components.

(d). The vibration transmitted from the case to the internal electrical components must be kept to a minimum.

(e). All case openings must be sealed with internal gaskets.

(2). Discussion, Tests, and Calculations

To provide sufficient strength for mounting the tail fins and the antennas as well as for supplying the necessary handling, weather, and fragment protection for the components, the major portion of the outer case is made of 3/8-inch mild steel. Since the front and rear of the bomb are protected by the strike aircraft structure, they do not require as much fragment protection; hence the tail cone of the rear case is 1/4-inch mild steel; the antenna noseplate is cast aluminum alloy; and the rear cover plate is 1/2-inch aluminum alloy.

Strength tests and calculations[1,2] indicate that the mechanical strength of the outer case is adequate (Ref SMD-489, Stress Test on 1/4-inch and 1/8-inch Mk IV Cone). No case damage during the normal handling and flight of 106 units has been noted. (43 of these were the later models with 1/4-inch tail cones.) One bomb with dummy internal weights was accidentally dropped from a B-29 bomb bay onto a concrete runway. The only resulting damage to the case was flattening of the split band and failure of the bolts attaching the rear case to the dummy weights. After the dent was removed from the split band, all components of the case were reusable.

A suitable ballistic contour has been achieved for the bomb as discussed under Section D, page 40 . A clean outer contour is maintained by using cavity-type antennas in the nose, a recessed lug, and flush-mounted safing plugs and pull-out plugs.

UNCLASSIFIED

~~SECRET~~

Case vibrations induced by the fins must be transmitted through the damping mass of the sphere before reaching the cartridge, which is cantilevered from the rear of the sphere. Tests which have been conducted indicate that the magnitude of vibration to which any electrical component of the cartridge will be subjected is probably less than one half that in the outer case at the base of the fins.[5]

Gasket-type sealing is provided for all openings in the outer case; thus the case serves as a container for the protection of internal components against moisture. Experience gained from long-term storage will determine whether the sealing is sufficient to allow long-term, high-humidity storage without the use of an external sealed container. Leakage tests that have been conducted to date indicate that adequate sealing exists for all operational purposes. However, inasmuch as considerable difficulty was experienced in initial procurement and quality control of inflated-type split-band gaskets, work is in progress to improve this gasket.

UNCLASSIFIED ~~SECRET~~

(3). Comparison with Mk III Mod 0 and Mod 1 FM

Item	Mk IV	Mk III
Case structure	Split band, forward case, and part of rear case of 3/8-in. mild steel. Antenna noseplate of cast aluminum alloy. Rear cone of rear case of 1/4-in. mild steel, rear cover-plate of 1/2-in. aluminum alloy.	Nose cap, front and rear ellipsoids 3/8-in. mild steel; tail cone of 3/16-in. aluminum alloy. E-plate 5/16-in. aluminum alloy.
Ballistic shape	See Section D	See Section D
Vibration transmission	Vibration in outer case transmitted through damping mass of sphere to electrical components.	Vibration damped by same method, except A-plate in Mod 0 which is mounted directly to case.
Sealing	Done by internal gaskets.	Done by external tape.
Accessibility to all detonators	Requires removal of antenna nose-plate, split band, rear cover plate, and cartridge.	Requires disassembly down to sphere.
Accessibility for nuclear insertion or extraction.		
Accessibility to fuzing and firing components	Requires removal of rear coverplate and installation of cartridge tracks. Cartridge containing fuzing and firing components except antenna plate rolled into or out of rear case. Antennas are in noseplate. Access to antenna cable connectors through nose access cover plate.	Requires complete disassembly down to sphere for firing components. Requires removal of entire tail assembly for fuzing components.

UNCLASSIFIED ~~SECRET~~

b(3) DOE

(C). SPHERE (HIGH-EXPLOSIVE CONTAINER)

(1). Functional Use and Design Requirements

The Mk IV FM sphere holds the HE charges, nuclear components, and detonators, and provides support for the fuzing and firing equipment and the forward and rear cases.

Since the Mk III FM explosive arrangements were proved to be satisfactory, the same general scheme was adopted for

[redacted]

To maintain the smooth contour of the outer case, the lug pad and lug were designed so that the lug would not protrude beyond the outer case. The lug pad on the top segment of the sphere was positioned so as to place the lug near the center of gravity of the finished unit. The lug attaching bolts can be removed without disturbing any other sphere components.

Two parallel ribs on opposite sides of the lug pad hold the gasket which seals between the split band and the top segment. Other portions of this gasket are confined in recesses formed between the polar-cap flanges and the case flanges.

(2). Tests, Calculations, and Discussion

b(3)
DOD

(b). Test of Lug Attachment. -- A fixture is used to test the lug on the bomb. The test load is 50,000 pounds (approximately 4-1/2 g).

Calculations[1] indicate that the lug, the lug attachments, and the top segment of the sphere possess sufficient strength for a 7-g ultimate load factor.

(c). Trunnion Attachment. -- Tests (duplicating actual load conditions) made on Mk III FM trunnions showed them to be of ample strength with a safety factor of approximately 10. Stress-coat techniques were used and, as expected, showed that stress concentration at the trunnion pins was not excessive.

Calculations for the trunnion attachments of the Mk IV FM indicate that a margin of safety of 7.7 exists for a 3-g load factor.[1]

12(a)
DOD

DOE b(3)

DOE b(3)

(3). Comparison with Mk III Mod 0 and Mod 1 FM

Item	
Inside Diameter	
Forward Polar Cap	
Center Segments	
Rear Polar Cap	
Nuclear Insertion	

As the next step in the program, drop tests from aircraft were made using 1/2-scale units. A total of 38 were expended, of which 9 were 3-3A and 29 were 3b-2c. In this test series, 12 fin designs were used.

The Aberdeen Ballistic Laboratory tests and the 1/2-scale drop tests led to the choice of the 3b-2c body shape for the full-scale drop program, and eliminated some of the undesirable fin configurations from further consideration. The full-scale drop program was planned to provide data for further fin improvement and to prove the design of the fuzing and firing components.

At the beginning of the summer of 1948, the full-scale drop-tests indicated that the large-plan fin (plan area increased approximately 25 per cent above the plan area of the standard fin) experienced smaller ballistic yaw in flight than other planforms. Fairly consistent performance was also obtained using the thin fin (plan area decreased approximately 25 per cent of the plan area of the standard fin) with a circular shroud attached. Neither of these types, however, gave ballistic performance of the desired quality.

At this time an advisory panel, composed of leading aerodynamicists from various aircraft companies and other research organizations, was called together to submit comments and recommendations. Because of the improvements in model-testing facilities and techniques that had come about since Aberdeen wind-tunnel and 20-mm range-model tests, it was recommended that wind-tunnel and range-model tests be inaugurated in parallel with a continuing drop program. The recommended tests fell into two basic classes:

(1). Continuation of a lift stabilization program using a wedge-type airfoil instead of a lenticular-type, and using various suggested planforms.

(2). If this proved unsuccessful, investigation of drag stabilization by means of perforated plates (the airplane dive-brake technique).

In the course of the single-wedge fin drop tests recommended by the panel, a modified airfoil section (double wedge) was developed by the Sandia Laboratory and its ballistic consultant of long standing, Dr. J. L. Kelley. Seven full-scale

drops (release altitudes from 32,000 ft to 37,000 ft) were soon made and each demonstrated high stability. In a second meeting of the advisory panel, the members officially expressed confidence that the double-wedge large-plan fin had satisfactorily solved the fin design problems within the speed and altitude ranges thus far tested. It was, therefore, chosen as the fin for the Mk IV Mod 0 bomb.

Test results from full-scale drops, wind-tunnel, and the 20-mm firing-range tests for this final configuration are given in the following sections.

(c). Drop Tests. -- Fifteen units dropped from B-29 aircraft have measured up to the highest expectations of ballistic performance. In no drop was a yaw greater than 3 degrees from the trajectory observed. Some of the ten units dropped from B-47 aircraft at greater speeds and higher altitudes demonstrated dynamic instability in a narrow band of Mach numbers. This unstable region, however, occupied only a very small portion of the entire trajectory and was followed by a region of high positive damping. These units attained a maximum Mach number of 0.96 to 0.97, where their performance is excellent. Because of its occurrence so early in flight and its short duration, the unstable region has a negligible effect on the trajectory as a whole.

Items of test data from the twenty-five double-wedge large-plan full-scale drops are given in Tables I through V contained in the Appendix.[8]

Some of these tabulated items are worthy of particular note in order to understand more completely the ballistic accuracy of the bomb and the importance of the differential effects which must be considered if great dropping accuracy is to be attained. The following table gives a breakdown of inherent ballistic errors.

- 44 -

b(1)
DoD

As recommended by the aerodynamics panel, an intensive study is being made to evaluate the dynamic characteristics of the Mk IV bomb. This study is being pursued in the 20-mm ballistic firing-range and in the wind-tunnel, and will be correlated with data from full-scale drops.

A statistical analysis of data from the fifteen B-29 drops results in the following values of the standard deviation.

b(
Do

(d). Wind-Tunnel Tests. -- Wind-tunnel tests have indicated that this configuration provides adequate static stability between 0.400 and 0.935 Mach number. Measurements of moment and drag in the wind-tunnel show excellent

*Corrections were made for ballistic wind, earth's rotation, atmospheric density structure, altitude, ground speed, vertical velocity of aircraft, and weight of unit. Corrections have not been made for temperature effects, for inadequacy of the Aberdeen Ballistic Reduction Tables as applied to our bomb, or for normal instrumentation errors.

correlation with corresponding values based on drop-test data. Static stability (distance between the center of gravity and the center of pressure) decreases sharply in the Mach range from 0.875 to 0.91 but is always positive, thus maintaining a stabilizing moment. A detailed presentation of wind-tunnel test data together with a comparison of the results with drop-test and 20-mm firing-range data is contained in Report SLMS-74, Part II.[9]

(e). 20-mm Firing-Range Tests. -- Models have been fired and photographed throughout the range of transonic velocities. These photographs provide a means of studying the existing flow patterns and show the exact location of the shock wave under various conditions (see Figs. 10, 11, and 12).

(E). ELECTRONIC CARTRIDGE

(1). Functional Use and Design Requirements

The cartridge was designed to contain all of the fuzing and firing components (Figs. 13 and 14) excepting those which must necessarily have connections directly at the skin of the bomb for external access and/or proper function. The specific items excluded are the antennas for the Archie sets, the receptacles for the safety plugs, and the receptacles for the pull-out plugs. In order to make plug-in connection to the detonator circuits possible, the distribution and cable compensation system was split from the rest of the X-Unit at the gap output in such a manner as to make connection by spring fingers when the cartridge is fastened into place. The distribution and cable compensation system is fastened to the sphere assembly, and the X-Unit is located on the front of the cartridge.

Vibration has been minimized by mounting the entire cartridge structure on the sphere assembly to damp out the vibration from the outer case. This practically dictated that the shape of the cartridge be cylindrical for greatest strength and most effective mounting.

The entire cartridge is easily removable for testing or replacement. The placement of parts on the cartridge permits all routine field tests to be made without removal of any of the components from the main structure. Components such as Archies and baro switches which frequently have to be modified or adjusted in the field under different tactical conditions, are easily removable without major disassembly.

Relatively few connections need to be made to complete the electrical hookup after the cartridge has been fastened into place, and these are easily and quickly accomplished. They include the four antenna cables for the Archies, the two safing-plug cables, the two pull-out cables, and the pull-out wire harness. No manifold pressure connections for the baro switches are required for this bomb, since the baro switches operate from the internal pressure of the bomb.

[redacted]

UNCLASSIFIED

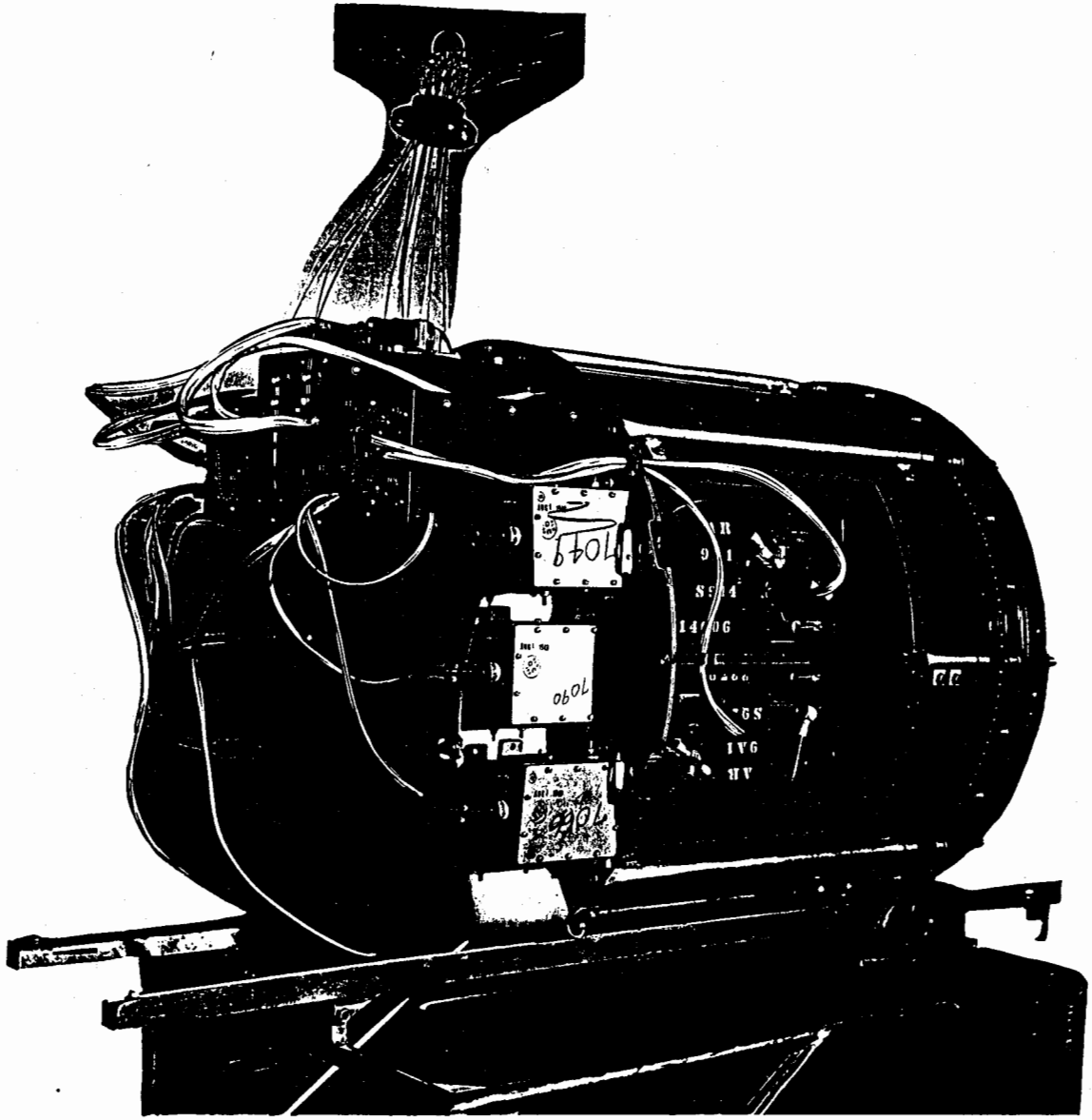

Fig. 13. -- Cartridge Containing Fuzing and Firing Components

UNCLASSIFIED

[redacted]

52

~~SECRET~~

UNCLASSIFIED

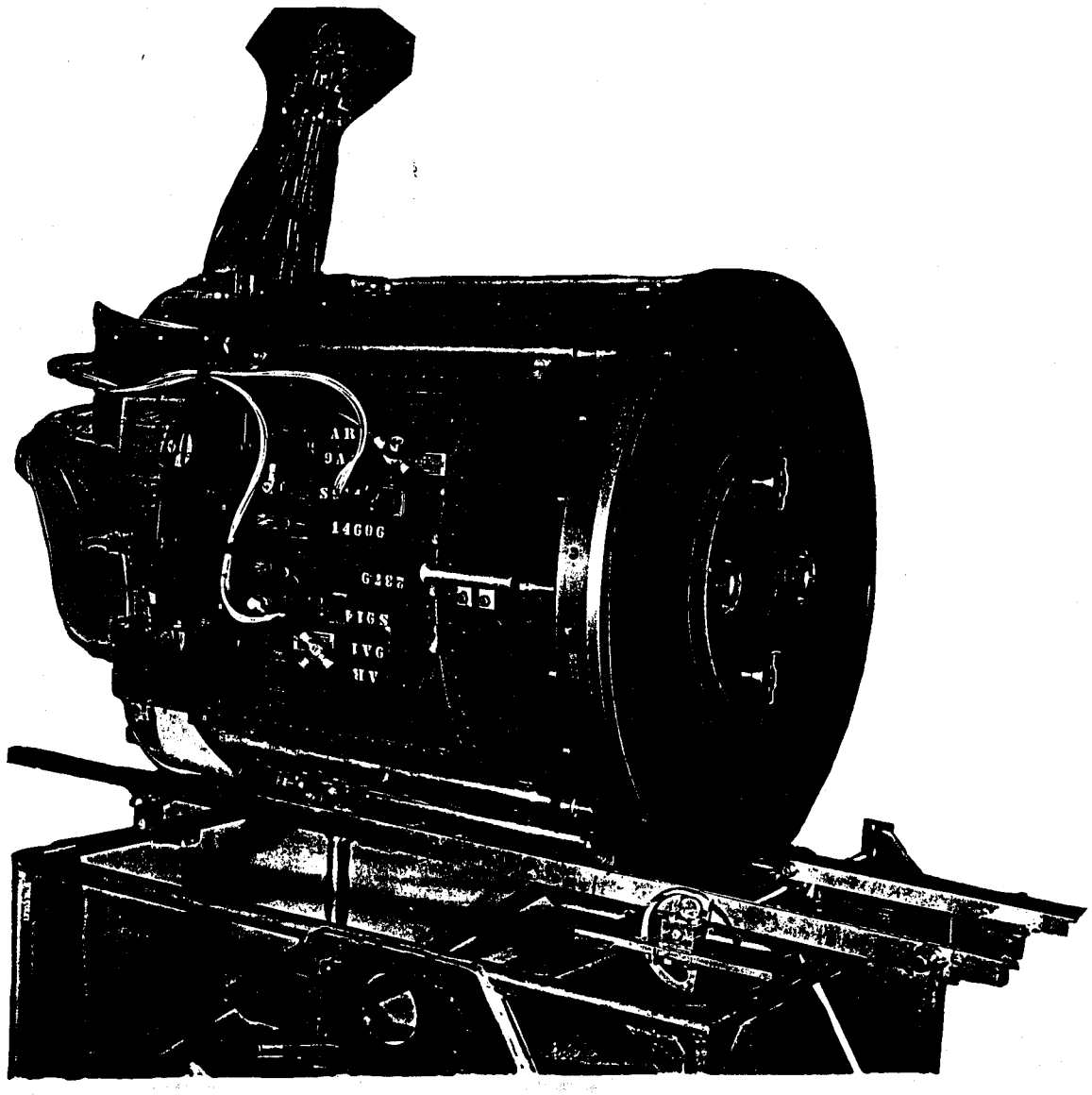

Fig. 14. -- Cartridge Containing Fuzing and Firing Components

UNCLASSIFIED

~~SECRET~~

(2). Tests, Calculations, and Discussion

Preliminary vibration tests on a completely assembled cartridge indicated that it was not sufficiently rigid structurally. Components mounted on the free end of the cantilever experienced accelerations of several times the input to the shake table.

The cartridge case was redesigned, and the Archies were mounted for vibration isolation.[10]

Tests on the final cartridge[11] showed that the cartridge structure will withstand constant amplitude vibration from 10 to 55 cps with an acceleration of 10 g at 55 cps; the magnification ratio of the cartridge structure has been decreased considerably, and the Archie assembly has been effectively isolated from vibration.

Calculations indicate that the cartridge case and attachments of the individual components will withstand a 10-g vibratory load factor.[1]

The maximum vibration recorded for a component of the cartridge during drop tests was 1.73 g at 240 cps.[5] The amplitude of vibration for most of the drops was so small that actual values could not be obtained.

UNCLASSIFIED
~~SECRET~~

(3). Comparison With Mk III Mod 0 and Mod 1

Item	Mk IV	Mk III
Mounting of Components	All electrical components except the Archie antennas and firing distribution system are mounted on a plug-in cartridge case. The entire cartridge case is mounted on a sphere to damp out the vibration from the outer case and is easily removable for testing.	Mod 0: Firing set is mounted on the forward cone which is attached to the sphere. The auxiliary equipment for the firing set mounts on the flat plate (A-plate) attached to the forward ellipsoid. Fuzing equipment is mounted on the flat plate (C-plate) which is attached to the rear cone. The rear cone is attached to the sphere. All components except those on the A-plate are mounted on the sphere to damp out vibration from the outer case. Mod 1: Same type of mounting as Mod 0, except that the A-plate does not exist in this model.

~~SECRET~~
UNCLASSIFIED

55

Item	Mk IV	Mk III
High-Voltage to Detonator	Connections to detonator are made by bayonet-type pressure connectors. All detonator cables terminate in a distributor flange mounted on the sphere. The distributor flange is the receptacle into which the fuzing and firing cartridge fits after assembly to the bomb. The detonator circuits are automatically completed to the X-Unit by spring fingers when the cartridge is inserted. NOTE: This makes it possible for the first time to have detonator wiring done before installation of the firing set, and allows the fuzing and firing set to be removed from the bomb without a major disassembly.	Mod 0: Connection to detonator made by crimping coaxial cable to detonator lead. All detonator cables terminate at the X-Unit in spark-plug connectors; all calbes must be attached to the X-Unit before any of them can be attached to the detonators. Mod 1: Connection to the detonator is same as Mk IV. All detonator cables terminate at the X-Unit load rings in a preformed, removable harness which must be attached to the X-Unit before assembly. The X-Unit must be installed before the detonator connections can be made.

~~SECRET~~
UNCLASSIFIED
56
UNCLASSIFIED

UNCLASSIFIED

b(3)
DOE

SIMPLIFIED FIRING CIRCUITS

FIGURE NO. 15

UNCLASSIFIED

SECRET
[redacted]

UNCLASSIFIED

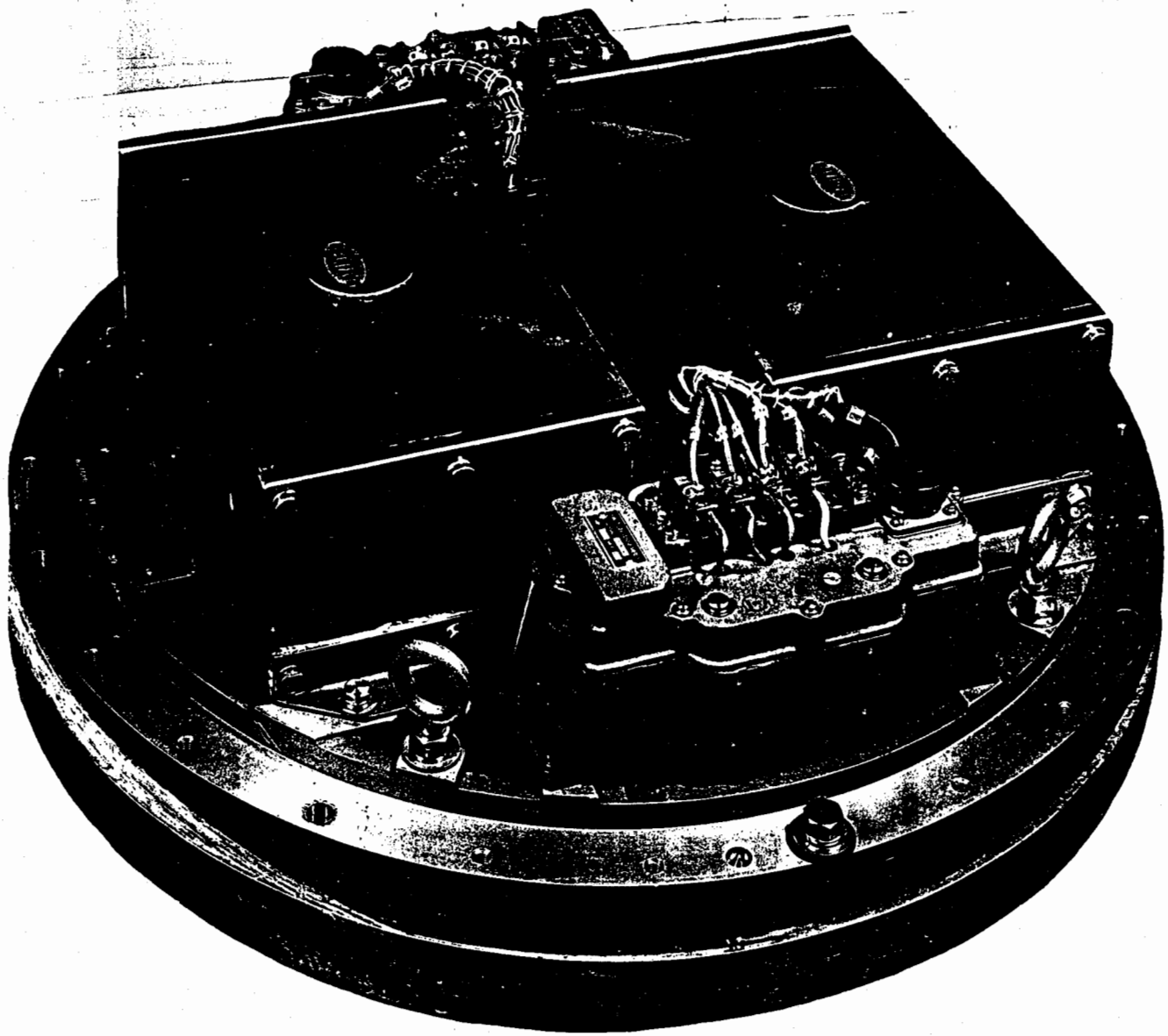

Fig. 16. -- Mk IV X-Unit

UNCLASSIFIED

SECRET
[redacted]

b(3) DOE

The mechanical specifications for this set require ability to operate under defined conditions of vibration, temperature, pressure, and humidity. The vibration specifications require vibration cycling from 10 to 55 cycles per second in one minute, with a total displacement of 0.06 inch for 45 minutes along each of the three major axes. The temperature specifications require operability of the set over the range from -22°F to +149°F. The pressure specifications require operation of the set in a normal manner at pressures as low as 7.0 psi (approximately 19,000 feet altitude). The humidity specifications require operability at humidities from 80 to 90 per cent RH at 79°F, approximately.

The X-Unit is armed by a network of clock-operated switches set to operate approximately 15 seconds after the pull-out of the arming wires. These arming wires are pulled as the bomb drops away from the plane.

b(3) DOE

This assembly differs from the Clock-Bank Assembly used in the Mk III Mod 1 only in the orientation of the connectors.

The Clock Assembly, housed in a Fiberglas laminate shell which serves as a heat insulator, is recessed into a central compartment of the Junction Box. The mechanism is maintained at proper operating temperature by two thermostatically controlled heater strips which are connected to the plane's power source through the FTB. Each heater strip and thermostat forms an independent heating device which cuts in at 80°F and out at 100°F.

b(3)
DOE

(b). Fuzing System

The fuzing system uses the same general components as were used in the Mk III Mod 1 bomb, but these components are remounted to conform with the cartridge design concepts. The fuzing system in the Mk IV Mod 0 bomb includes four Archies, six baro switches, two relay networks, and one (slot) antenna noseplate. The Archie is the same modified tail-warning radar set, the APS-13, used as the basic fuze in previous atomic bombs. The relay networks are so arranged that any two Archie output signals will operate both relay networks. Each relay network is in itself capable of firing both channels of the X-Unit.

In order to protect the Archie sets from damage due to shock and vibration, they are placed on vibration isolation mounts in the Cartridge structure.

The antenna system consists of four cavity-backed slot antennas mounted symmetrically on the front noseplate. The flush-mounting slot antenna is superior from an aerodynamic and handling standpoint to the Yagi-type antenna used on previous bombs. Electrically, the slot antenna has the desirable characteristics of broad band, low-voltage standing wave ratio (1.5 or less in the normal operating range),

suitable radiation pattern, and gain comparable to the former Yagi antenna. The noseplate assembly weighs 62 pounds. A design is now under development that will reduce this weight to approximately 15 pounds.

The baro switches are the same (BS-4 and BS-5) as those used in previous bombs and have the same function.

In the Mk IV Mod 0 weapon the pressure that actuates the baro switches is obtained by a flow of air into the interior of the bomb through six 3/8-inch ports near the nose. Since the bomb case serves as a manifold, no hose connections to the baro switches are necessary. The pressure drop across the ports produces nearly ambient pressure inside the bomb

(c). Junction Box

Excepting the antenna cables, all fuzing and firing system interconnections are made through the Junction Box. The use of the Junction Box makes it possible to disconnect any of the major subassemblies for replacement or modification without a major disassembly of the cartridge. The Junction Box contains the Archie integrating capacitors, the relay networks, the power fuses, and the pull-out switches. The pull-out switches are so mounted that pull-out wires can be inserted without removal of the Junction Box cover.

(d). Power Supply

The power supply for the Mk IV Mod 0 bomb consists of two independent banks of 30-volt lead-acid batteries contained in one heated enclosure. It is identical to that used in the Mk III Mod 1 bomb. The batteries, designated ER-12-10, are markedly superior to the NT-6 batteries used in the Mk III Mod 0 bomb. They have a longer shelf life in a charged condition, greater mechanical ruggedness, and require simpler preparation and installation procedures during weapon assembly operations.

(e). Safety Features

Adequate safety features are included in the design of the electrical system to prevent premature detonation under all predictable circumstances from the time of assembly until the baro switches close (normally a few seconds before detonation altitude).

Protection from the time of assembly until the firing plugs are inserted is afforded by safing plugs in the nose of the bomb. These safing plugs open the power lines to the firing set, and, in addition, short-circuit the input lines to the firing set. Protection during the remainder of the time the bomb is in the plane is afforded by a bank of clock-operated switches which provide an open circuit to the firing set, and by pull-out switches which provide open circuits from the relay network outputs to the firing switches.

Protection from time of release until the bomb is out of fuze range of the strike aircraft is afforded by the X-Unit arming clocks and barometric switches.

In the event of premature baro-switch closure, the arming clocks will prevent the X-Unit from firing should the radar fuze range on the plane. Normally, the baro switches prevent the radar fuze from operating during this period.

Protection against premature detonation after operation of the clock switches is afforded solely by the baro switches. They minimize chances of premature fuze operation due to malfunction of equipment and radar countermeasures.

(f). Comparison of Drop Sequence of the Mk III Mod 0 and the Mk IV

Operating phenomena after release are provided in Figures 17 and 18. There is no significant difference in this respect between the Mk III Mod 1 and the Mk IV.

(2). Tests, Calculations, and Discussion

(a). Firing System

The X-Unit Mk IV Mod 5 has successfully operated under all conditions of temperature, pressure, vibration, and humidity mentioned above on page 58[12,13].

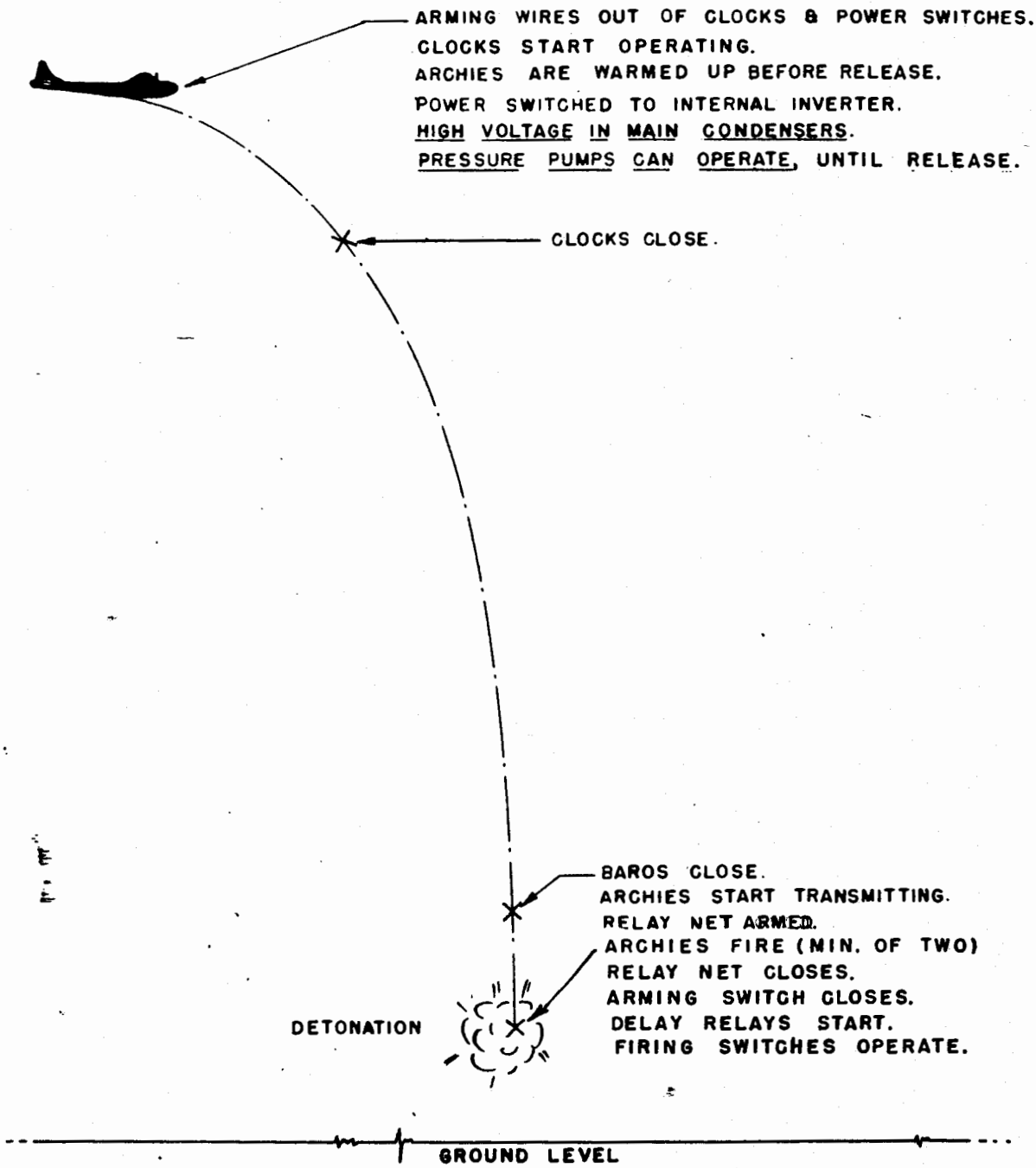

DROP SEQUENCE FOR THE 1561 FM ATOMIC BOMB
WITH THE MK. II X-UNIT
(MK. III MOD. 0 ATOMIC BOMB)

FIGURE NO. 17

UNCLASSIFIED

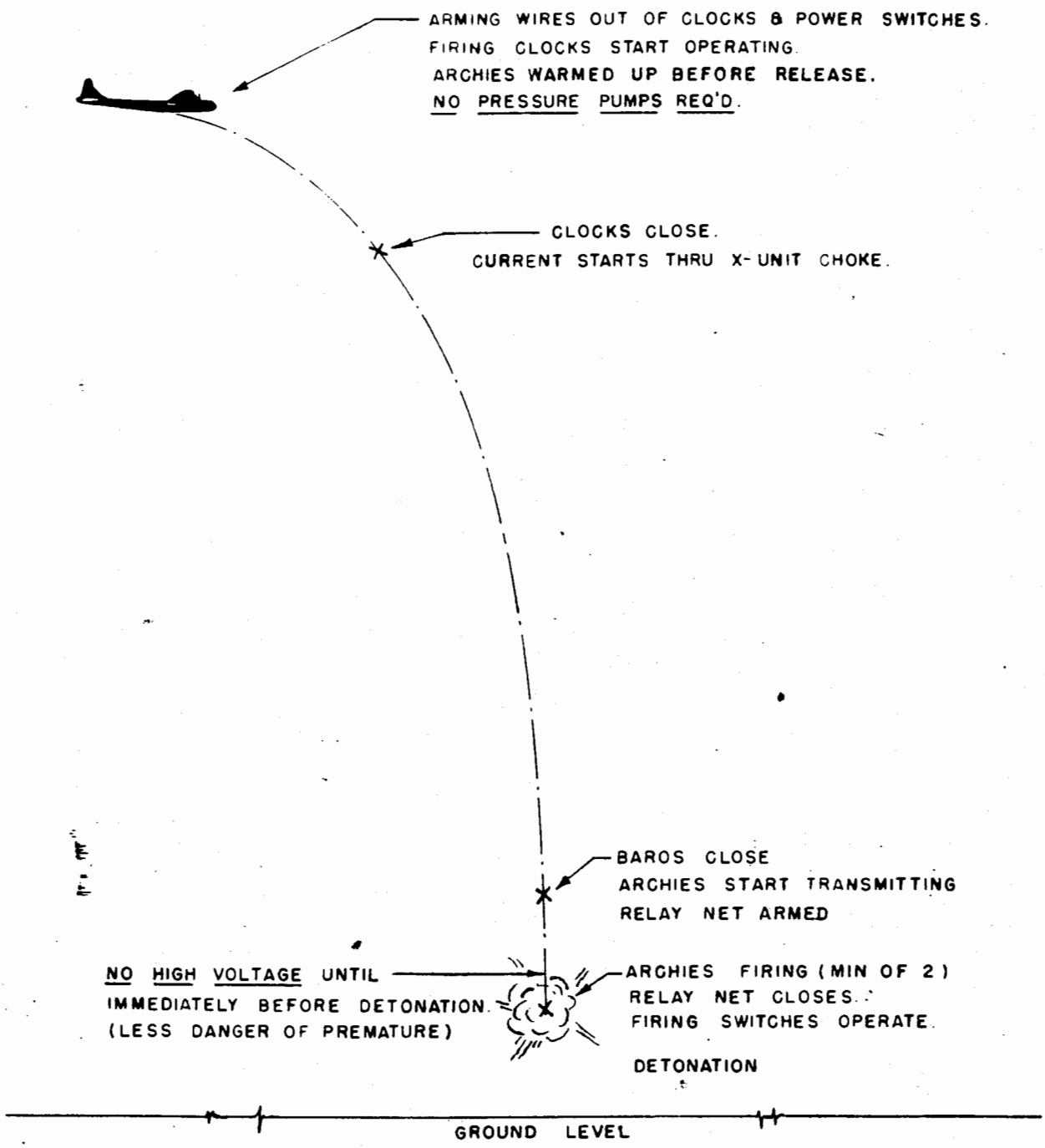

DROP SEQUENCE FOR THE MK IV, MOD O ATOMIC BOMB

UNCLASSIFIED

FIGURE NO. 18

Several pulse transformers were tested thousands of times with 1.5 watt-seconds of energy; 1.2 watt-seconds is typical of X-Unit usage. No failures resulted.[14]

Firing Switch Vibration Tests. -- The firing switch, in its enclosure, was vibrated at 10 g from 60 to 200 cps.[15] Trouble with contact chatter was encountered at higher frequencies, but operation was normal at accelerations well above those met with in drop tests.

X-Unit Condenser. -- Condensers have passed a 17-kilovolt high-potential test at temperatures as low as -70°F.[16]

[redacted]

These results have been verified at Los Alamos by GMX-7 through an explosive mixture similar to that used in the 1E20 detonator (Ref GMX-7-30, Mk IV Mod 5 X-Unit Firing Tests, August 16, 1949).

Clocks. -- The modified M-111A2 fuze is capable of withstanding a vibration of 10 g at 10 to 55 cps in three planes for 45 minutes. Operation was not affected by exposure to 120°F, 98 to 100 per cent RH for 48 hours, with subsequent lowering of temperature in decrements of 5° per minute to 25°F. The main weakness of this clock is that it is neither rewindable nor resettable without special procedures, including the taking of X-ray pictures. This, coupled with a total life of approximately five operations, prohibits field testing and makes operational testing by the Road Department impracticable. This timing device is not suited to long-term storage because (a) it must be stored in wound condition, which may result in a weakening of the untempered main spring; (b) the lubricant becomes viscous during long-term storage; and (c) not all parts are corrosion resistant.

(b). Fuzing System

Archie Tests. -- Normally-mounted Archies were vibrated in a cartridge for 45 minutes in the two most severe planes. Maximum acceleration at the base of the cartridge was 10 g at 55 cps. No mechanical failures occurred, and the Archies were electrically operable at the conclusion of the tests.[11]

In a cold chamber test, a temperature of -40°F had no appreciable effect on the power output or the timing-oscillator frequency, and the carrier frequency was changed less than 2 megacycles.[17]

[redacted]

Antenna Noseplate Tests. -- The antenna noseplate was vibrated continuously from 10 to 55 cps for 90 minutes along each of three mutually perpendicular axes. The maximum acceleration was 10 g. When the plane of vibration was perpendicular to the plane of the polystyrene cover, the antenna noseplate and mounting went into resonance at frequencies of 43 to 53 cps. The maximum acceleration developed during resonance was 40 g. It is believed that the resonance effects were due to the fixture used to mount the antenna plate on the vibration table, rather than to actual resonance of the antenna assembly at this frequency. There was no evidence of cracking or breaking of any member.[18]

The high-temperature limit of the antenna noseplate is determined by the deformation temperature of the polystyrene windows, which is 158°F. The noseplate should not be placed where temperatures of 150° or greater exist. It will operate under extreme cold conditions of -67°F.

The antenna noseplate assembly was subjected to 120°F and 95 to 100 per cent RH for a period of two weeks with no change in voltage standing wave ratio.

Final radiation pattern measurements have not been completed, but on the final preproduction model the beam width between half-power points in the H-plane was 80 degrees and in the E-plane 60 degrees.[19]

Absolute gain measurements on the slot antenna have not been made to date. Relative gain measurements made with the Yagi antenna, AYIF, show them to be comparable within 2 db.

In the normal operating range the antenna input impedance is approximately 50 ohms, and the voltage standing wave ratio is 1.5 or less.

b(3)
DO

To make this system effective it is necessary that the accuracy of the baro system be both high and predictable.

b(3)
DO

On the basis of an analysis of existing pressure data, it is estimated that the baro switches can be set to operate at an altitude 2000 feet above detonation altitude. The accuracy of the system (expressed in one standard deviation) is estimated as follows:

(1). Baro-switch calibration inaccuracies: 100 feet.

(2). Baro-switch errors caused by sensitivity to temperature variations and vibration: 200 feet.

(3). Error in prediction of barometric pressure: 400 feet.

(4). Error in pressure system: 600 feet.

(5). Total error of baro system: (approximately) 750 feet.

The lack of statistical information makes it impossible to establish accurate values at this time. A continued study of the system is being made and the estimated accuracy will be changed as dictated by results of this study.

Studies have been made in an attempt to determine the effect of various outside factors upon the baro system. These factors are release altitude, release velocity, variation of atmospheric conditions, and icing. Lack of sufficient data on this complex system makes it impossible at this time to present concrete conclusions. A discussion of the effect of these factors based upon existing knowledge follows.

(1). Drop data obtained to date do not indicate any definite effect due to variation in release altitudes from 32,000 to 40,000 feet.

(2). Drop data indicate a trend toward an increase of baro-switch pressure of approximately 440 feet altitude per 100 mph true air speed increase in release velocity. For normal B-29 drops this differential is so small as to make it impracticable to correct baro-switch settings; however, if release velocities vary over a wide range, corrections should be made.

(3). Drop data have indicated no definite trend due to the effects of variations in atmospheric factors upon baro-switch operation. However, it must be pointed out that the variation in these factors at the test site was small.

(4). The effects of icing during drop are not known. It is believed that the probability of occurrence of detrimental icing is low unless heavy icing conditions are encountered.

A program is in process to increase the knowledge of the present baro system and to investigate other systems which might be more desirable. To this date no proof of a better, usable system exists.

Baro-Switch System Drop Tests. -- A study of data obtained from an analysis of pressure data obtained during drops for units with 3/8-inch ports and double-wedge large-plan fins follows.

(a). 5 Units -- B-29 Drops

Data from 3 units with late baro indications are not included since it is believed that the abnormal action was caused by the use of split-band gaskets of poor quality, thus allowing leakage to occur in the bomb case. Internal pressure is corrected for variation in ambient pressure. Drops were made from 32,000 feet.

Pressure Alt	Av Internal Pressure Lagging Pressure Alt by	Max Spread	One Standard Deviation
2000 ft	450 ft	900 ft	± 386 ft
4000 ft	400 ft	900 ft	± 402 ft
6000 ft	350 ft	1050 ft	± 306 ft
8000 ft	300 ft	1050 ft	± 434 ft
10,000 ft	250 ft	850 ft	± 365 ft

(b). 8 Units -- B-47 Drops

The drops were made from altitudes of 35,000 and 40,000 feet. Release velocities varied between approximate values of 400 and 540 mph true air speed. Internal pressures are corrected for variations in ambient pressures.

Pressure Alt	Av Internal Pressure Leading Pressure Alt by	Max Spread	One Standard Deviation
2000 ft	200 ft	2000 ft	± 458 ft
4000 ft	250 ft	1750 ft	± 515 ft
6000 ft	350 ft	1650 ft	± 531 ft
8000 ft	500 ft	1600 ft	± 467 ft
10,000 ft	600 ft	1500 ft	± 518 ft

In general the pressure pickup data agree very well with baro switch data as shown on page 71. The accuracy of the system expressed in standard deviations with 1/2-inch ports as shown by pressure measurements is much better than the accuracy as shown by baro switch operation. It is believed that the pressure measurements present a more accurate picture.

Baro Switch Tests. -- SLA tests[20,21] on BS-4 and BS-5 baro switches showed that the average variation from closure altitude at room temperature of the BS-4 was ±50 feet, with a maximum variation of ±110 feet. The BS-5 did not perform as well under the same conditions. Two fifths of the runs gave a variation of over ±100 feet. These variations ranged from 1520 feet below to 590 feet above closure altitude.

The low-frequency vibration tests (10-60 cps, 10 g) indicated that most chatter occurred in the plane parallel to the longitudinal axes of the bellows for both the BS-4 and BS-5 switches. The BS-4 started to chatter as much as 730 feet above the static setting; closure of the switch occurred between 640 feet and 180 feet below the static setting. Chatter started on the BS-5 as high as 740 feet above the static setting and closure occurred as much as 840 feet below the same setting.

The BS-4 baro switch closure altitude averaged 50 feet higher and the BS-5 25 feet higher when dived at the rate of 1000 feet per second than when dived slowly.

The BS-4 and BS-5 closure altitude varies approximately 500 feet on the average in the temperature range of +120°F to -65°F. In one test, however, it varied 4300 feet over this range. The electrical arrangement of the six baro switches tends to minimize the effect of variation in altitude of closure for individual baro switches.

(c). Junction Box

The Junction Box used on the Mk IV Mod 0 bomb has successfully met all of its design requirements. A final production model withstood constant amplitude vibration from 10-55 cps for 45 minutes in each of the three mutually perpendicular planes with maximum acceleration of 10 g.[22] There were no mechanical failures or electrical malfunctions.

Relay Network Tests. -- The hermetically sealed relay network has undergone separate tests.[23] The pull-in coil voltage for various coils was found to vary from 15.4 to 17.1 volts, and the pull-out voltage from 5.8 to 7.3 volts. Temperatures ranging from -60°F to +149°F did not affect the hermetic seal or the operation of the network. It withstood vibration from 10 to 200 cps at 10 g between 60 and

200 cps without any contact chatter. However, the mounting bracket for the relays showed evidence of "oil canning" at 155 to 170 cps. The bracket was accordingly redesigned and another vibration test was conducted with excellent results.[24] After 1000 operations, using the X-Unit firing switch as a load, the contacts of the relay network showed no appreciable change in contact resistance.

Fuses and Fuse Holders. -- The fuses and fuse holders contained in the Junction Box were vibrated at 10 g up to 300 cps without any evidence of damage to the fuse element or discontinuity between the fuse and its holder. Tests were also made which prove that a monitor fuse which is in series with an operational fuse of higher rating will be the only one to "blow" if a direct short is placed on the monitor line.[25]

Condensers. -- The Junction Box also contains four 8-μf, 600-v condensers which are part of the Archie pulse integrating circuit. These condensers have undergone tests[26] which show that they maintain their capacity within 18.5 per cent over a 225°F temperature range; have low leakage; withstand vibrations of 10 g between 60 and 250 cps; and have a 500 per cent safety factor on voltage breakdown rating.

Pull-Out Switches. -- The switches have been tested[27] under vibration (10 to 60 cps at constant amplitude with 10 g at 55 cps, and 60 to 200 cps at constant acceleration of 10 g) with no failures or contact chatter. Performance was satisfactory after the switches were exposed with the contacts open for 8 hours at 120°F, 95 to 100 per cent RH, and then exposed for two hours at -65°F. In life tests of four switches, one failed after 5129 operations. The other three were still operable.

(d). Batteries

Extensive tests have been conducted on the ER-12-10 battery to determine normal and emergency preparation procedure and limiting conditions of shelf life, temperature, and vibration.

The battery is normally prepared by filling with electrolyte and charging at a rate of 1.3 amperes for 20 hours. The shelf life is then rated conservatively at three weeks.

(1). X-Arm (The firing circuits are armed by the clocks).

(2). Archie Arm (The barometric arming of the fuzing circuit causes the Archies to start transmitting).

(3). Second Archie Ring (The ringing of the second Archie from the target triggers the firing circuit).

(4). Gap Fire (The X-Unit fires).

There was no telemetered indication of operation of one half of the X-Unit circuit on ST-203. This could have been caused by either a failure of one half of the X-Unit or by an instrumentation failure.

[redacted]

X-arm, second Archie ring, and gap fire can be compared directly from the table and will not be discussed further here.

The nominal baro-switch setting for each unit is listed in the table. The altitudes of baro-switch closure were greater than the baro-switch setting for 5/8-inch and 1/2-inch baro ports and in general less for 3/8-inch ports since the operating pressures were greater and less than ambient, respectively. For experimental reasons, no attempt was made during these tests to adjust the baro switches to close at the desired tactical altitude. It is to be noted that the internal pressure as read by pressure pickups agrees fairly well with the baro-switch setting in all cases.

The altitude of baro-switch closure (Archie arm) is sensitive to the size of the baro-port openings and appears to be sensitive to fin type; the analysis was therefore based on the segregation of the units into groups. The results follow.

The altitude at which Archie arm occurred for ST-166 is not applicable when determining total spread because the desiccators were installed in such a manner that additional throttling of the airflow occurred. It is believed that the data for ST-168 is not applicable for the same reason.

Since it is believed that the late baro-switch operations for ST numbers 202, 203, and 204 were caused by leakage through the outer case resulting from the use of split-band gaskets of improper quality, the data for these units were not used for determining accuracy. A study is being made in an attempt to determine the actual cause of the late operations, and redesign and quality control steps are being taken to ensure reliable gasket functioning.

UNCLASSIFIED

~~SECRET~~

(3). Comparison With Mk III Mod 0 and Mod 1 FM

Item	Mk IV	Mk III
(a). X-Unit Note: Mk IV X-Unit is essentially a re-packaged version of the X-Unit used in the Mk III Mod 1 bomb. The clock enclosure and the battery box have been removed from the X-Unit and located elsewhere on the cartridge.	Charges a condenser from 30-v d-c source to high voltage by means of a resonant charging circuit.	Charges condenser to high voltage from 30-v d-c source by means of 400-cycle inverter, step-up transformer and rectifier.
	Energy to fire detonators stored in magnetic field prior to operation of firing switch.	Energy to fire detonators is stored in condenser bank charged to high voltage before operation of firing switch.
The unit has been designed to save weight and bulk. The wiring of the unit has been considerably simplified.	The X-Unit is armed by two banks of clock-actuated switches, started by pull-out wires, one bank per circuit, two per X-Unit.	Iris-type arming switch is actuated by relay net. 12-v d-c winding is operated at 30-v d-c for rapid action and positive hold-down. Two switches are provided per circuit, four switches per X-Unit.
The remarks in the "Mk III" column pertaining to the X-Unit refer only to the Mk II X-Unit that is used in the Mk III Mod 0 FM unless specifically mentioned otherwise.	The firing switch is a high-speed switch operated by the impact of a rotor. This provides nearly instantaneous opening of the switch to cause the sharp voltage rise that is desired in the firing condensers. It is operated by Archies after gate formation. Delay Relay is not required. No interlock is required because the arming switch must be closed before any power is available to the choke, which is the only source of high potential. Consequently, if the firing switch did operate prematurely for any reason (highly improbable), no firing would result as long as the arming switch was not first actuated.	Firing switches, two per X-Unit, one per each circuit, are operated by Delay Relays which are started by Archie relay net. The Relays prevent too early a closure. An interlock (electrical) prevents the closure of firing switch before arming.

UNCLASSIFIED

~~SECRET~~

UNCLASSIFIED

Item	Mk IV	Mk III
(a). X-Unit	The Mk IV gaps have a radioactively stabilized breakdown voltage; hence are more uniform in characteristics than those in the Mk II X-Unit. These stabilized gaps are used as voltage sensitive switches to fire detonators automatically when sufficient voltage exists. [redacted]	The Mk II X-Unit gaps do not require special stabilization of the breakdown voltage, since their breakdown is normally forced by a trigger pulse applied simultaneously to a special electrode in each gap when a firing switch operates. [redacted] This, plus a bias stabilization system for the trigger electrodes, insures that no gap will break down without a normal firing switch operation.
	Premature gap breakdown is not possible as previously explained under firing switch above. The high potential needed for firing the detonators is not present until the firing switch is operated by the final Archie signal. Firing condensers are shorted and grounded until the firing switch opens.	Premature gap breakdown is unlikely as indicated in the preceding paragraph. Measures have been taken to insure that even an improbable premature gap failure will not fire the detonators. An arming switch for each gap opens the circuit to the detonators, and also grounds the input to the detonator cables. In addition an electrical interlock between the arming and firing switches prevents triggering of the gaps prematurely.

b(3) DoE

b(3) DoE

UNCLASSIFIED

[redacted]

UNCLASSIFIED

Item	Mk IV	Mk III
(a). X-Unit	Because high voltages are not present at high altitudes, no pressurization of the X-Unit is required to prevent flash-overs. The whole system provides safety through simple circuitry.	The Mk II X-Unit case must be pressurized in the bomb bay and during the drop to prevent flash-over of high voltage at high altitude. Unit has high voltage present both in the airplane and during the drop.
	Only moving parts are the magnetically operated firing switches (2).	Moving parts are the magnetically operated arming switches (4) and firing switches (2).
	Open framework construction.	Unit sealed and pressurized.
	Very simple circuitry, containing only essential operating elements.	Circuitry quite involved.
	Weight of X-Unit 335 lbs approximately.	Mod 0 FM - 300 lbs approximately Mod 1 FM - 700 lbs approximately (with full batteries).
	Either X-Unit spark-gap switch fires all detonators.	Each spark-gap switch fires only half of the detonators.
(b). Archies	Archies are antivibration mounted.	Archies are not antivibration mounted.
(c). Barometric Switches	Same as used in Mk III.	BS-4 and BS-5.
(d). Barometric Switch Pressure System	Baros are open to the interior of the weapon. Pressure for operation of the baros is obtained by a flow of air through six port openings and desiccators located approximately 1/2" aft of the flat nose of the weapon.	Baros are connected to an annular manifold which is in turn connected to eight holes located about 30 inches aft of the maximum diameter of the bomb.

[redacted]
UNCLASSIFIED
[redacted]
UNCLASSIFIED

Item	Mk IV	Mk III
(e). Junction Box	Archie outputs are connected to two hermetically sealed relay networks. Each relay net output is connected to one firing switch.	Archie outputs are connected to a single relay network with a common output. This common output is connected to both firing switches.
	Pull-out switches can be armed with pull-out wires without removing the Junction Box cover.	The Junction Box cover must be removed to allow arming of the pull-out switches with pull-out wires.
(f). Pull-out Wires	A single pull-out wire seal assembly, fastened by three screws, is used to pass the ten pull-out wires through the rear case.	Five pull-out wire assemblies, each fastened with four screws, are used to pass the ten pull-out wires through the ellipsoids.
(g). Pull-out Cables	2 required for monitoring of electrical equipment during flight.	Mod 0 FM - 6 required. Mod 1 FM - 3 required.
(h). Archie Antennas	Uses 4 slot-type antennas flush-mounted on a single flat plate which serves as the noseplate for the weapon.	Uses 4 Yagi-type antennas that are mounted on and protrude from the ellipsoids. To prevent mechanical damage to the antennas and for security reasons, it is desirable to mount them after the weapon is loaded into airplane.
(i). X-Unit Clock Bank	Same as Mk III, but mounted in Junction Box assembly.	Mod 0 - None used. Mod 1 - 8 M-127 flare fuze clocks placed in one heated enclosure, 4 clocks per bank, 2 banks. Mounted in X-Unit assembly.

UNCLASSIFIED

UNCLASSIFIED

Item	Mk IV	Mk III
(j). Battery Box	Same as Mk III, but located on rear plate of cartridge.	Mod 0 FM - One heated enclosure for fuzing equipment with four 30-v banks of batteries located on C-plate. One heated enclosure for firing equipment with two 30-v banks of batteries. Located on A-plate Mod 1 FM - One heated enclosure with two 30-v banks of batteries. Located on X-Unit.

UNCLASSIFIED
[redacted]

UNCLASSIFIED
[redacted]

84

Chart of Fuzing and Firing Drop Tests

(from preliminary reduction of telemetering data)

UNCLASSIFIED

b(3) DOE

UNCLASSIFIED

(G). DETONATORS

(1). Functional Use and Design Requirements

[redacted]

b/3

(b). It is mandatory that the electrical connection to the detonator be reliable since it can not be thoroughly checked after it is made.

(c). The manufacturing process must provide for a reliable explosives-loading procedure in which the omission of explosive components can be readily detected by inspection. The importance of this requirement is demonstrated by the fact that there is evidence of two 1773 test failures resulting from the undetected omission of one tetryl pellet.

(d). Since the installation of the detonator may be a field operation, it is desirable that its assembly to the sphere and its connection to the electrical system be mechanically simple operations.

(e). It is important that the detonator performance be reliable, even after long-term storage.

(2). Tests, Calculations, and Discussion

Tests have proved that the 1E20 is functionally satisfactory and is extremely simple to connect and install. Some minor difficulties which were encountered in production are being minimized by detail design improvements. When the detonators are connected with reasonable care, chances of a poor electrical connection are practically eliminated.

The advantages of the 1E20 over the 1773 are as follows:[30]

(1). Convenient and safe connection to cables leading to increased probability of proper functioning in operational use.

(2). Convenient connection to bomb, leading to more rapid and more reliable bomb assembly.

(3). Improved booster-to-explosives transmission.

(4). Simplified explosives train.

(5). Increased corrosion protection.

(6). Better simultaneity performance by a factor of 2.

(3). Comparison with Mk III Mod 0 FM

Item	Mk IV (1E20 Detonator)	Mk III Mod 0* (1773 Detonator)
[redacted]		
Convenience of electrical connection. (Affects reliability in field).	Excellent	Poor
Convenience of installation to HE	Good	Fair
[redacted]		
Explosive train	Satisfactory. Simplified in comparison to Mk III.	Marginal. Omission of tetryl pellet has caused failures.
Corrosion protection	Uses plated brass which is corrosion resistant. Uses no copper cap.	Uses copper cap which corrodes. Aluminum-brass joints corrode, necessitating rejection.
Quality control of manufactured unit.	Technique improved.	Fair

b(3) DOE

b(3) DOE

*The Mk III Mod 1 FM uses the 1E20 detonator with the spring-loaded attaching ring removed. With this exception, it is the same detonator as that used on the Mk IV FM.

(H). HIGH-EXPLOSIVE CHARGE ASSEMBLY

b(5)
DOE

[redacted]

b(3) DOE

b(3) DOE

For periods of exposure not exceeding twelve hours, the HE may be stored at temperatures up to 155°F; for periods not exceeding two weeks, it may be stored at temperatures up to 120°F. It can be stored indefinitely below 100°F.

b(3) DOE

b(3) DOE

[redacted]

(I). SYSTEMS RELIABILITY ANALYSIS[31]

b(3) DOE

b(3) DOE

(b). Probability of Premature Operation

A possibility of premature operation exists from the time of bomb assembly until the time of desired detonation. Many positive precautions are built into the bomb to prevent firing up to the time of release. The probability of premature operation during this period is mathematically unpredictable, but with qualified, trained personnel this probability should approach zero.

(c). Probability of Malfunction Due to Other Causes

Atmospheric Conditions. -- No mathematical values are available for the probability of detrimental effect due to icing, but examination of all information that has been uncovered indicates the probability of detrimental effect is low unless heavy icing conditions are encountered. Abnormal and unpredictable winds are frequently encountered in cumulus cloud structure. These conditions could increase the bomb dispersion over 1000 feet. Detonation in rain clouds can result in appreciable losses of blast efficiency. At present it is impossible to reduce any of these conditions to exact figures, but indications are that every effort should be made to drop atomic bombs under favorable weather conditions.

Shell Bursts. -- Again no specific mathematical data can be presented to evaluate the effect of shell burst on the unit. There are two possible effects on the unit from shell burst: (1) actual physical damage to the electrical circuits or explosive elements, and (2) the effect on the baro system due to either the result of transient pressure waves or to leakage through flak holes. The 3/8-inch steel case of the bomb offers some protection from low-velocity fragments, and the independent dual circuits reduce the probability of single fragments knocking out the whole bomb. It is considered that transient pressure waves could not possibly be of sufficient magnitude or duration to affect the baro system. Flak holes in the split band or rear case tend to cause late baro operation.

(J). NUCLEAR COMPONENTS

(1). Functional Use and Design Requirements

The purpose of the nuclear components is to release rapidly a large quantity of energy through the fissioning of a core of U-235 and/or Pu. The energy is released as a result of the rapid rise of the neutron population in a highly compressed supercritical system of fissionable material surrounded by a neutron reflector or tamper. Since the

[redacted]

b(
Da

energy release which causes the active material and tamper to expand and thus become a subcritical system.

The basic design which determines the size and arrangement of the various nuclear components is the product of a large number of calculations and experiments which consider, among other things, the hydrodynamics of the imploding system, the neutron properties of the active material and the tamper, and the nuclear safety problems associated with handling the fissionable material.

The engineering design must primarily consider (1) maintenance of symmetry in the assembled nuclear system with a minimum of cavities, protuberances or other perturbations; (2) fabrication problems associated with the rather uncommon materials used: and (3) requirements for ease of insertion and removal of the nuclear capsule.

(2). Tests, Calculations, and Discussion

[redacted]

b(
Da

b(3) DOE

b(3)
DoE

b(3) DOE

(3). Comparison with Mk III Mod 2

(III). BOMB ASSEMBLY AND TEST EQUIPMENT

(A). Functional Use, Design Requirements, and Discussion

The equipment required for handling, assembling, and testing the Mk IV Mod 0 FM is divided into Types 1, 1A, 2, 3, and 4 in such a manner that all necessary bomb operations can be efficiently performed. Types 1 and 1A, 2, 3, and 4 have been given contracting names, ie, "kits," "lots," "groups," and "sets," respectively.

(1). Type 1 - Field Equipment - Kits. -- Type 1 equipment is divided into kits which contain the tools and equipment required by assembly teams for field assembly and field testing of the bomb and minor maintenance of test equipment. These kits are the following:

(a). Cartridge Test Kit - 40A

The Cartridge Test Kit contains all test equipment, tools and auxiliary equipment required for the complete testing of the fuzing and firing components of the bomb. The major items in this kit are a Flight Test Box, Delta Timer, Peak-Reading Voltmeter, Archie Test Panel, Baro Switch Tester, Junction Box Tester, Flight Circuit Tester, High Potential Tester, Unit Tester, Meter Calibrator, and Cartridge Dolly.

(a). Lot 40 I

The contents of this lot have not yet been definitely determined, but it will contain items such as a dispersal cradle for supporting the bomb prior to loading into the strike aircraft, and a Flight Test Box which is installed in the strike aircraft for flight check of the bomb.

(b). Lot 40 T

[redacted] b(3) DOE

(4). Type 3 - Base Equipment - Groups. -- Type 3 equipment is divided into groups which contain tools and equipment required at bases for major disassembly, long-term surveillance, and major maintenance. Base equipment will not be used for field assemblies. The various groups are the following: Group K: Canning; Group R: Nuclear; Group U: Instrument Repair; Group V: Electrical; and Group N: Mechanical.

(5). Type 4 - AFSWP Support - Sets. -- Type 4 equipment is divided into sets which contain items of support equipment for the military field organization such as material for shelter, power, disaster cleanup, and expendable stock. It will be the responsibility of the using forces to determine and procure most of the items in these sets. The various sets are the following: Set J: Expendable Stock; Set L: Heavy Tool; Set W: Disaster; Set X: Salvage; Set Y: Building; and Set Z: Power.

(B). Comparison with Mk III Mod 0 Bomb

The following list shows the comparative number of items required for assembly and testing. Owing to changes in kit philosophy the number of items may change, but their relationship will remain approximately the same.

	Mk IV		Mk III Mod 0	
	Total Items	Special Items	Total Items	Special Items
Mechanical Handling and Assembly Equipment				
Field Mechanical Kit 40F	79	25	115	36
Electrical Test Equipment				
(a). Cartridge Test Kit 40A	82	21	179	34
(b). Battery Kit 40C	28	2	48	7
(c). Test Equipment Repair Kit 40Q	Same as Mk III Mod 0			
Nuclear Test and Assembly Equipment				
(a). Nuclear Field Kit 40S	Same as Mk III Mod 0			
(b). Nuclear Flight Insertion Equipment Lot 40T	Not yet determined	4	Not used with Mk III Mod 0	
Miscellaneous Equipment				
(a). Expendable Set J (b). Heavy Tool Set L (c). Disaster Set W (d). Salvage Set X (e). Building Set Y (f). Power Set Z	Little change from the kits already established for the Mk III will be required.			

(IV). SUMMARY

The Mk IV Mod 0 FM is an implosion-type atomic bomb based upon the same basic nuclear fission principles as the Mk III FM. It incorporates an improved fuzing and firing circuitry over that in the Mk III Mod 0 weapon and the same basic circuitry as that in the Mk III Mod 1 weapon. The bomb is re-engineered to provide for greater ruggedness, greater dependability, easier field techniques, and better ballistic performance than either of the Mk III versions.

The ballistic design is the result of over 100 full-scale and half-scale drop tests, including 29 drops of the final design in addition to wind tunnel and range-fired 20-mm model tests which showed good correlation to the drop tests. Values of pitch and yaw for B-29 conditions are less than 6 degrees maximum included angle, and dispersions due to the bomb itself are less than one fourth of those of the Mk III FM.

The basic elements of the fuzing system (baro switches, Archies, and clocks) have not been changed at this time, but details of the Junction Box, including the relays and pull-out switches, have been redesigned and improved. The mounting of all components has been improved to minimize the possibility of damage or malfunction. The firing set (X-Unit) has been completely re-engineered for compactness and ruggedness. All electronic equipment has been tested in the laboratory and these tests have been supplemented by 30 functional drop tests.

The field assembly and electrical checking operations that will be required on the bomb have been minimized:

[redacted] b(3) DOE

(V). CONCLUSIONS AND RECOMMENDATIONS

It is concluded that the Mk IV Mod 0 FM implosion-type atomic bomb is an improvement over its predecessors, the Mk III Mod 0 FM and the Mk III Mod 1 FM, in the following respects:

(1). It requires less time, fewer men, and less auxiliary equipment in the field to prepare the bomb for delivery.

(2). It adapts itself to safer delivery tactics inasmuch as (a) the nuclear material may be inserted after the strike aircraft is airborne, and (b) high voltage is not present in the firing circuit until the firing switch is actuated (this is also true of the Mk III Mod 1 FM).

(3). It contains many improved components specifically designed or arranged to operate and withstand storage under stringent environmental conditions.

(4). It has improved ballistic stability and accuracy.

On the basis of these conclusions it is recommended

(1). That this weapon be produced and stockpiled as a part of the national defense program;

(2). That it replace the Mk III weapons now in stockpile;

(3). That laboratory and field investigations of all components be continued in an effort to establish more firmly the reliability and safety factors as well as the limiting environmental conditions of operability; and

(4). That a continued program of component development be pursued for the purpose of incorporating desirable modifications into stockpile weapons in the interest of military effectiveness.

(VI). FUTURE PROGRAMS FOR THE MK IV FM

The report thus far has dealt with the description and evaluation of the Mk IV Mod 0 FM weapon as it is going into stockpile. Inasmuch as progress in the field of weapon design is made a step at a time, it is planned to continue a development program on this weapon to incorporate new component improvements and features now thought to be desirable. These fall into two main groups, each of which may require a Mod change of the bomb.

(A). Lightweight Outer Case

b(3)
DOE

be possible. ~~This change~~ in case design will sacrifice all protection of the unit from low-velocity fragments, but the weight saving will materially reduce take-off hazards and permit an increase in aircraft range or speed. It will probably bring about fairly radical changes in handling techniques and equipment. This design program is now under way.

(B). New Electronic Cartridge

The second program encompasses the redesign of the electronic cartridge to provide a more reliable fuzing system. Several radar fuze devices and a new baro switch are under development at the present time. (It is planned to incorporate selected ones of these individual components into a new cartridge.)

One feature of this new cartridge will be in-flight setting of the fuzing system (specifically, of baro switches and radar units).

New clock timers and new baro switches are being developed to replace these present items in the Mk IV Mod 0 should it be judged economically and tactically desirable when the development is complete. Work is in progress to develop a lightweight and quickly detachable antenna nose-plate and sphere trap door to facilitate in-flight nuclear insertion. A new plug-in type of delay line has been developed for Archie. This modification will reduce the possibility of multiple gating, allow easier range modifications, and provide a higher maximum range setting. It is planned to replace the present Archies with the new unit, pending laboratory and drop tests.

Three other programs are being carried forward as essential improvements to the Mk IV Mod 0 to be included when the need for them is firmly established:

(1). Improvements to the present baro system.

(2). Improvements of the present split-band gasket.

(3). Solutions to the problem of the sticking of the HE trap-door charges.

LIST OF REFERENCES (Cont)

[11]SMD-822, Preliminary Vibration Test of a Modified Mk IV Cartridge Unit, January 25, 1949

[12]SMD-684, Mk IV Mod 5 X-Unit -- Humidity, Temperature, Pressure, and Vibration Acceptance Tests, September 28, 1948

[13]SMD-568, Vibration Test of New Type Retainer Plate of the Distributor Assembly, Mk IV, September 1948

[14]SLMS-66, Testing X-Unit Cross-Trigger Pulse Transformers, February 21, 1949

[15]SMD-852, Vibration Test of Mk IV Mod 5 X-Unit Firing Switch, November 10, 1948

[16]SMD-907, The Sprague Vitamin "Q" Discharge Capacitors on the Mk III Mod 2 X-Unit, January 17, 1949

[17]SMD-153, Cold Box Test of Archie, November 17, 1944

[18]SMD-126, Vibration Test on the Slot Antenna, June 9, 1947

[19]SMD-177, Final Report, Development of Slot Antenna, n d

[20]SMD-824, Evaluation Test of BS-4 and BS-5 Baro Switches, December 29, 1948

[21]SMD-847, Evaluation Test of Bendix BS-5 Baro Switch, February 24, 1949

[22]SMD-823, Vibration Test on Junction Box Assembly Mk IV Mod 0 Weapon, February 1, 1949

[23]SMD-694, Design Acceptance and Performance of Mk IV Relay Net Enclosure, October 20, 1948

[24]SMD-930, Design Acceptance of Mk IV Relay Net Enclosure, January 10, 1949

[25]SMD-593, Electromechanical Test on Littelfuse Co Aircraft-Type 4AG Fuses and Beryllium-Copper Fuse Clips No. 123004 Type XXX, August 9, 1948

LIST OF REFERENCES (Cont)

[26]SMD-540, Comprehensive Test on the Cornell Dublier T6080 Condenser, August 3, 1949

[27]SMD-875, Test of Arrow-Hart and Hegeman Switches Type 80630-A, May 23, 1949

[28]SMD-558, Cold Test on Mk III Mod 2 X-Unit, August 12, 1948

[29]SMD-888, Test of Bendix Scintilla Connectors, June 15, 1949

[30]LAMS-842, 1E20 Detonator Recommendations for Adoption, n d

[31]SMD-1025, Systems Reliability Analysis, July 28, 1949

[32]SMD-908, Vibration Test of LCC and LTC, January 12, 1949