UNCLASSIFIED

Redacted VERSION

This document consists of 13 pages.
~~No. 3 of 41 copies. Series~~ A.

LAMD-309

ADWD-136

FAMILY COMMITTEE
Minutes of Ninth Meeting
May 11, 1950

SAA 20006933 0000

A. Attendance.

The ninth meeting of the Family Committee was held Thursday, May 11, 1950 at 1:15 PM in Room B-117. Those present were

N. E. Bradbury	L. D. P. King
J. C. Clark	J. M. B. Kellogg
F. de Hoffmann	D. P. MacDougall
D. K. Froman	J. C. Mark
R. W. Goranson	L. Rosen
A. C. Graves	B. R. Suydam
D. B. Hall	R. F. Taschek
M. G. Holloway	E. Teller, Chairman
E. R. Jette	J. A. Wheeler

DEPARTMENT OF ENERGY DECLASSIFICATION REVIEW
1ST REVIEW DATE: 10/30/96
AUTHORITY: ☐ AUDIT ☐ ADD
NAME: Wilson
2ND REV. ON DATE: 2-28-97
AUTHORITY: ADD
NAME: [illegible]
DETERMINATION (CIRCLE NUMBER)
1. CLASSIFICATION RETAINED
2. CLASSIFICATION CHANGED TO:
3. CONTAINS NO DOE CLASSIFIED INFO
4. COORDINATE WITH:
5. CLASSIFICATION CANCELLED
6. CLASSIFIED INFO BRACKETED

B. Minutes of the Eighth Meeting.

The Committee unanimously adopted the minutes of the Eighth Meeting reported in ADWD-1-133 with the following corrections:

(1) Under attendance add: M. G. Holloway. (Apologies of the secretary.)

(2) The forthcoming Family meetings mentioned under C should read May 25th and June 1st, 1950, instead of May 26th and June 2nd, 1950, respectively.

C. 14 Mev Neutron Experiments at Eniwetok.

At Teller's request, Froman agreed to chair the meeting. Froman outlined 14 mev neutron experiments which were now considered for the Spring '51 tests. A list of these is reproduced in Table 1. Appropriate abbreviations were chosen (as listed in Table 1) and these will be used throughout these minutes.

D. DINEX.

Hall emphasized that Figure 3 of the Eighth Minutes was only a very schematic arrangement of DINEX. Other ways of arranging the shield and equipment may be preferable. He recalled to the group that at present it was planned to use 2 or possibly 3 complete shielding "assemblies" with one or more magnets per assembly. This multiplicity of magnets is necessary due to both intensity and the requirement that there be two energy channels (7 and 14 mev). Merely dropping the 7 mev measurements would therefore not cut down the number of DINEX assemblies to one.

UNCLASSIFIED

RESTRICTED DATA
This document contains restricted data as defined in the Atomic Energy Act of 1946.

SECRET

CAUTION
This document contains information affecting the National Defense of the United States. Its transmission or the disclosure of its contents in any manner to an unauthorized person is prohibited and may result in severe criminal penalties under applicable Federal laws.

96SA20A000

total of 24 plates, can cover the entire spectrum. For the various tests, it is planned to distribute between 4 and 6 of these assemblies at distances of 200 to 1200 yards (spaced approximately 200 yards apart).

The weight of an individual assembly is about 25 tons and it is planned to recover all assemblies save the nearest one at 200 yards. Some comment was made that one may wish to redesign the assembly so as to eliminate bolting in order to make it more certain that the assembly stays together in spite of the large pressure exerted upon it. The 200 yard stage was designed primarily to provide for the possibility of a fizzle in which case the intensity may be so low that only the 200 yard stage will yield the desired data. The original plan was that in case of a success the 200 yard stage would simply be blown to bits and no data obtained from it. However, the discussion developed that the 200 yard stage may well be the most interesting of the lot. This is so because at the stages further out, ground scattering may give rise to considerable corrections. At 200 yards it may be possible to bury the camera below the ground and have it point at a fairly respectable angle toward the gadget on the tower. It is a very unlikely event that a neutron will be scattered off the ground and still find its way into the camera in this case.

The reason for placing assemblies at varying distances all the way to 1200 yards is determined by two factors: to provide for a spread in expected intensity and possibly to calculate corrections due to air and ground scattering from the variation of the spectrum with distance.

Rosen mentioned that the expected accuracy in measuring the spectrum of neutrons incident upon an assembly can essentially be limited by the accuracy to which the (n,p) cross-sections are known.

Corrections due to ground scattering of the 14 mev neutrons could be eliminated if static tests with a strong 14 mev neutron source at the top of the test tower could be performed.

DOE b(3)

As in the case of ANEX, the DINEX shield will cause trouble by degrading some of the 14 mev neutrons. It should be pointed out, however, that if the DINEX shields could be moved even a distance of 10 yards away from the gadget, the collimators at the 200 and 400 yard stations for PHONEX would not look at the DINEX shield. This would decrease the interfering effect of the DINEX shields. Of course, it was recognized that this could not be done in practice since the tower cab is not large enough to permit the DINEX shield to be 10 yards away from the gadget.

In order to make the experiment yield reliable quantitative data, one would have to be able to do away with the following sources of error, or else be able to correct for them in a reliable manner: scattering

Some difficulties concerned with the experiment were discussed by the group. These included scattering in the air of the fluorescent light before it reaches the telescope, scatter in the optical system, response of crystals, etc. It was agreed that these would have to be looked into in some detail before it could be decided what scale program this should involve. However, there was unanimous agreement that whatever arrangements are made, these should not interfere with the work proceeding on DINEX. Teller and Graves were requested to examine the details of FLUNEX and the possibilities of enlisting groups outside of the Laboratory (particularly Charlie Baker at Brookhaven and P. R. Bell at Oak Ridge) and to report to the Family Committee at the next meeting on their findings.

H. TENEX.

Time did not permit taking up this item and discussion of TENEX was postponed until the next meeting.

I. Miscellaneous.

DOE
b(3)

DOE
b(3)

It was agreed that a mockup of tower cab and an approximately 25' adjoining section of the tower should be erected at TA33.

J. Next Meeting.

The agenda for the next meeting will be as follows:

(1) Report on TENEX and FLUNEX.

SECRET

UNCLASSIFIED

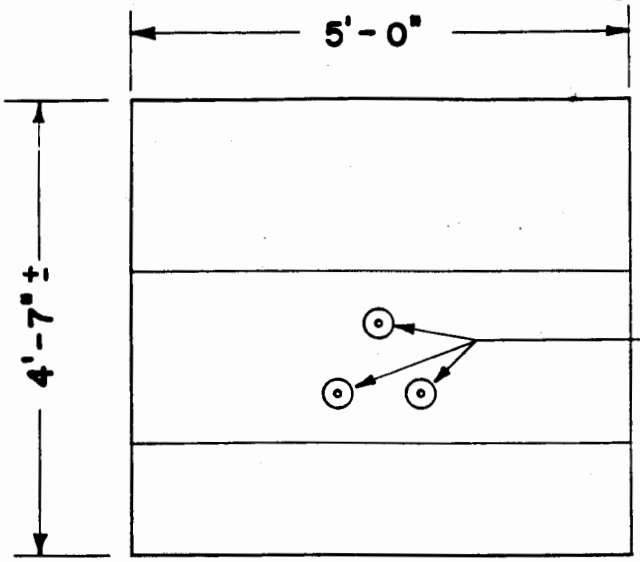

3 COLLIMATOR TUBES - 1/2" D
1 mil, 3 mil AND 10 mil POLY-
ETHYLENE RADIATORS
3/8" STEEL BLAST COVERS.

ELEVATION OF BLOCK

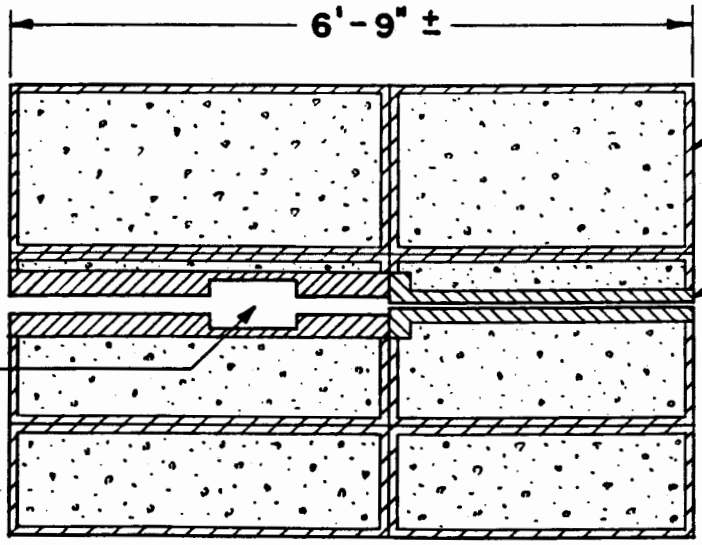

SECTION THRU BLOCK

NOTE - BLOCK MADE UP OF SIX SECTIONS BOLTED TOGETHER
EACH SECTION IS 1" STEEL SHELL FILLED WITH
LIMONITE CONCRETE.

FIG. 2
SCHEMATIC OF PHONEX ASSEMBLY

SECRET

UNCLASSIFIED

SECRET

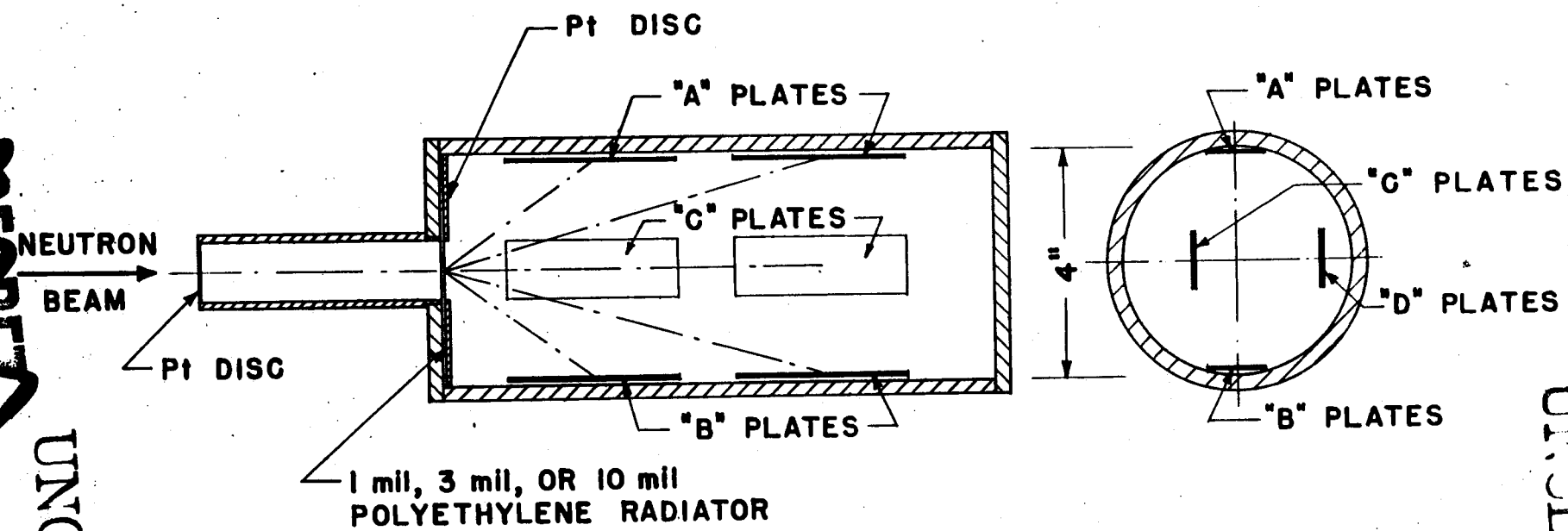

FIG. 3

PHONEX CAMERA

SECRET
UNCLASSIFIED
SECRET
UNCLASSIFIED