~~SECRET RESTRICTED DATA / CNWDI~~

ITT Industries

Advanced Engineering & Sciences

5009 Centennial Boulevard (80919)
PO Box 39550
Colorado Springs, CO 80949-9550
tel 719 599 1500
fax 719 599 1942

SAC20[illegible]7940 [illegible]

RELIABLE REPLACEMENT WARHEAD PROJECT OFFICERS GROUP KICKOFF MEETING (U)

A-05-197(R)

11 May 2005

Derived from OPNAVINST S5513.5B, Encl (27), Change 4, dated 12 January 2004.

RESTRICTED DATA
This material contains Restricted Data as defined in the Atomic Energy Act of 1954. Unauthorized disclosure subject to administrative and criminal sanctions.

CNWDI
Critical Nuclear Weapon Design Information
DOD Directive 5210.2 Applies

DISTRIBUTION LIMITED
Further distribution by any holder may be made only with specific prior approval of STRATEGIC SYSTEMS PROGRAMS, WASHINGTON DC 20393-5446, ATTN: SP-28.

MINUTES OF THE RELIABLE REPLACEMENT WARHEAD
PROJECT OFFICERS GROUP KICKOFF MEETING (U)
ITT AES, Arlington, VA
11 May 05

(U) TABLE OF CONTENTS
(This Table of Contents is UNCLASSIFIED)

Section		Page
1.0	GENERAL BUSINESS	1
1.1	ADMINISTRATIVE REMARKS	1
1.2	OPENING REMARKS	1
1.3	BACKGROUND, TERMS OF REFERENCE, GOALS & OBJECTIVES, POG MEMBERSHIP & SCHEDULE	1
1.4	POG AUTHORITY, STRUCTURE, CHARTERS, & GROUNDRULES	3
2.0	NAVY TECHNICAL GROUNDRULES	3
2.1	MK4A FUZE / AF&F REQUIREMENTS	3
2.2	NAVY MASS PROPERTIES / INTERFACE REQUIREMENTS	4
3.0	AIR FORCE TECHNICAL GROUNDRULES	4
3.1	MK12A ARMING & FUZING AND MASS PROPERTIES / INTERFACE REQUIREMENTS	4
4.0	REQUIREMENTS	4
4.1	INFRASTRUCTURE	5
4.2	FORCE STRUCTURE	5
5.0	LABORATORY DESIGN OPTIONS	5
5.1	LLNL DESIGN OPTIONS	5
5.2	LANL DESIGN OPTIONS	5
5.3	SNL DESIGN OPTIONS	6
6.0	OTHER ACTIVITIES	6
6.1	DISCUSSION	6
6.2	ACTION ITEM REVIEW	6
6.3	RRW POG MASTER MEETING SCHEDULE	6
6.4	NEXT MEETING	6

MINUTES OF THE RELIABLE REPLACEMENT WARHEAD
PROJECT OFFICERS GROUP KICKOFF MEETING (U)
ITT AES, Arlington, VA
11 May 05

(U) LIST OF APPENDICES
(This List of Appendices is UNCLASSIFIED)

Appendix	
A	AGENDA
B	ATTENDEES LIST
C	RELIABLE REPLACEMENT WARHEAD PROJECT OFFICERS GROUP ORGANIZATION CHARTS
D	RRW BACKGROUND, TERMS OF REFERENCE, GOALS & OBJECTIVES, POG MEMBERSHIP AND SCHEDULE
E	POG AUTHORITY, STRUCTURE, CHARTERS, AND GROUNDRULES
F	MK4A FUZE AND AF&F REQUIREMENTS
G	NAVY MASS PROPERTIES AND INTERFACE REQUIREMENTS
H	MK12A ARMING & FUZING AND MASS PROPERTIES / INTERFACE REQUIREMENTS
I	NNSA RESPONSIVE INFRASTRUCTURE IMPLEMENTATION
J	FORCE STRUCTURE REQUIREMENTS
K	LLNL DESIGN OPTIONS
L	LANL DESIGN OPTIONS
M	SNL DESIGN OPTIONS
N	ACTION ITEMS
O	RRW POG MASTER MEETING SCHEDULE

MINUTES OF THE RELIABLE REPLACEMENT WARHEAD
PROJECT OFFICERS GROUP KICKOFF MEETING (U)
ITT AES, Arlington, VA
11 May 05

1.0 (U) GENERAL BUSINESS

1.1 (U) ADMINISTRATIVE REMARKS

6(b)(6)

(U) [redacted] provided administrative remarks regarding the facility as well as security.

Privacy Act 1974

1.2 (U) OPENING REMARKS

6(b)(6) (U) [redacted] welcomed everyone to the kick-off meeting for the Reliable Replacement Warhead (RRW) Project Officers Group (POG) and acknowledged

6(b)(6) [redacted] for his efforts in getting the Terms of Reference (TOR) established. [redacted] also recognized [redacted]

Privacy A 1974 6(b)

6(b)(6) [redacted]

Privacy Act 1974 6(b)(6)

(U) [redacted] presented the agenda which is included as Appendix A. The List of Attendees is attached as Appendix B. An organization chart is attached as Appendix C.

1.3 (U) BACKGROUND, TERMS OF REFERENCE, GOALS & OBJECTIVES, POG MEMBERSHIP & SCHEDULE

Privacy Act 1974 6(b)(6)

(U) [redacted] presented an overview which included RRW background, Terms of Reference (TOR), goals and objectives of the study, POG membership, and schedule. A copy of his briefing is included as Appendix D. [redacted] discussed the competition for the RRW design. The POG agreed that this will be a true competition between Los Alamos National Laboratory (LANL) and Lawrence Livermore National Laboratory (LLNL) and will result in getting the best individual engineering effort from each laboratory team. The laboratories' designs will be developed independently and reviewed separately to ensure that data is protected as required for proprietary information. The selected design will then be subject to peer review.

6(b)(6) Privacy Act 1974

Privacy Act 1974 6(b)(6)

(U) [redacted] stated that the starting point for the Navy is the MK5 aeroshell with a MK4A Arming, Fuzing & Firing (AF&F) system. He mentioned that there is a significant inventory of MK5 aeroshells. He made it very clear that there will be no changes to the MK5/D5 missile interface and that the MK4A AF&F will be used as is. [redacted] 6(b)(6) Privacy Act 1974 also commented that he believes that the W78 is the only other existing Nuclear Explosive Package (NEP) that will fit in the MK5 shell. This sparked discussion on what makes up a "new" design. There is significant political resistance to anything perceived as "new". [redacted] took an action, in conjunction with [redacted] to provide clarification on what constitutes a new design at the next POG. Regardless, [redacted] 6(b)(6) Privacy Act 1974 added that we should not be too quick to dismiss a design simply because it may be perceived as new. He believes that Congress wants to look at all the options and select the "right" approach despite some appearance of being new.

6(b)(6) Privacy Act 1974

6(b)(6) Privacy Act 1974

~~(S)~~ ~~(U)~~ [redacted] 6(b)(6) Privacy Act 1974 expressed that he is very encouraged about the RRW POG due to the potential benefits to the stockpile and the related infrastructure. He explained that the National Nuclear Security Administration (NNSA), USSTRATCOM and the Services are part of the design down-select process because of the impact to the overall force structure. [redacted] 6(b)(6) Privacy Act 1974 challenged the group to look for opportunities to speed up the process. The POG was given 18 months to complete the study but perhaps it could be done faster. A First Production Unit (FPU) for RRW has been set for 2012 – perhaps it could be sooner. [redacted] said that USSTRATCOM should be involved as much as possible and should play a significant role in defining requirements. [redacted] 1.4 (a) (e)(g) Finally, [redacted] remarked that verification and inventory process improvements should be considered if possible. 6(b)(6) Privacy Act 1974

6(b)(6) Privacy Act 1974

6(b)(6) Privacy Act 1974

(U) [redacted] 6(b)(6) Privacy Act 1974 also provided general comments at this point. He believes that the Department of Defense (DOD) and NNSA are very well aligned on the objectives. He stated that the POG was created because the Nuclear Weapons Council (NWC) recognizes that it is vital to address the sustainment of the NNSA infrastructure. [redacted] 6(b)(6) Privacy Act 1974 committed to applying the resources needed for this task. However, finding the funding will be a difficult challenge. The support of USSTRATCOM and the Services will be helpful in obtaining Congressional

(U) support. [redacted] also commented on the increasing importance of security for nuclear weapons. Preventing loss and recovery at all costs has been done very well but precluding loss at all costs will be even harder and more important. [redacted] emphasized that it will be important to focus on security and surety where it is needed most and will do the most good.

1.4 (U) POG AUTHORITY, STRUCTURE, CHARTERS, & GROUNDRULES

(U) [redacted] presented a briefing that reviewed the POG authority, responsibilities, structure, subcommittee draft charters, and ground rules. His briefing is included as Appendix E. An action was assigned to the POG Principals to provide names of members for each subcommittee and working group by 20 May 2005. Another action was assigned each subcommittee and working group to review the draft charters and present revised charters for review and approval at the next POG. ITT was given an action to distribute the USN and USAF MCs and STS by 20 May 2005. Two actions were also assigned to the Requirements Subcommittee: (1) brief the POG on the consolidated requirements at the next POG meeting; and (2) distribute draft RRW MCs/STS that reflect the consolidated requirements within 6-8 weeks. The status should be provided at the next POG.

2.0 (U) NAVY TECHNICAL GROUNDRULES

2.1 (U) MK4A FUZE / AF&F REQUIREMENTS

~~(S)~~ (U) [redacted] presented the MK4A AF&F Requirements for RRW. His briefing is attached as Appendix F. [redacted] provided some guidance to SNL to say that they are tasked to identify how to use the MK4A AF&F. [redacted] Another action was assigned to USAF/XOS to identify the Air Force fuze baseline for the RRW study by the next POG meeting.

4.2 (U) FORCE STRUCTURE

~~(S/FRD)~~ ~~(U)~~ [redacted] presented the Force Structure Requirements. His briefing is included as Appendix J. One of the important USSTRATCOM requirements is that the current [redacted] His briefing included notional numbers for deployed forces in 2012 as well as a desired yield for RRW. [redacted]

6(b)(6) Privacy Act 1974

5.0 (U) LABORATORY DESIGN OPTIONS

5.1 (U) LLNL DESIGN OPTIONS

~~(S)~~ ~~(U)~~ [redacted] 1.4(a)(e)

5.2 (U) LANL DESIGN OPTIONS

6(b)(6) Privacy Act 1974

(U) [redacted] presented the design options for LANL. His briefing is included as Appendix L. [redacted] recommended forming an Enterprise Modeling subgroup. However, the POG did not agree at this time, contending that the subject can be handled by the current subcommittee structure. [redacted] 6(b)(6) Privacy Act 1974 again expressed concerns about the need for controlling cost savings expectations. [redacted] 6(b)(6) Privacy Act 1974 wants to address this at the first NWCSSC Review Meeting by saying that there will be large, long-term savings, but not large, short-term cost savings.

6(b)(6) Privacy Act 1974

(U) [redacted] had to leave at this point in the meeting. He expressed satisfaction with the progress made during this meeting.

6(b)(6) Privacy Act 1974

(U) An action item was assigned to the POG Principals to provide a list of names for SIGMA 15 access by 20 May 2005. An action assigned to the POG Principals is to provide a distribution list for general POG materials, also due 20 May 2005.

5.3 (U) SNL DESIGN OPTIONS

(b)(6) Privacy Act 1974

(U) [redacted] presented the SNL design options. A copy of his briefing is included as Appendix M.

6.0 (U) OTHER ACTIVITIES

6.1 (U) DISCUSSION

(U) There were no additional discussion items at this point of the meeting.

6.2 (U) ACTION ITEM REVIEW

(U) The new action items assigned during this meeting were reviewed and a copy is included as Appendix N. (Note: Status of th eaction items as of 1 June is indicated)

6.3 (U) RRW POG MASTER MEETING SCHEDULE

(U) The master meeting schedule is attached as Appendix O.

6.4 (U) NEXT MEETING

(U) The next meeting was changed to 9 June 2005, Thursday afternoon, to coincide with the Annual Stockpile Assessment Conference at SNL/NM in Albuquerque, NM.

APPENDIX A

AGENDA

This Page is Intentionally Left Blank

AGENDA
RELIABLE REPLACEMENT WARHEAD KICKOFF MEETING
ITT Industries, AES Division, Arlington, VA
11 May 2005

GENERAL BUSINESS

ADMINISTRATIVE REMARKS ..... ITT
OPENING REMARKS ..... SSP
BACKGROUND, TERMS OF REFERENCE, GOALS & OBJECTIVES, POG MEMBERSHIP & SCHEDULE ..... SSP
POG AUTHORITY, STRUCTURE, CHARTERS, AND GROUNDRULES ..... ITT

NAVY TECHNICAL GROUNDRULES

MK4A FUZE/AF&F REQUIREMENTS ..... SNL
NAVY MASS PROPERTIES/INTERFACE REQUIREMENTS ..... LMSSC

AIR FORCE TECHNICAL GROUNDRULES

MK12A FUZE/AF&F AND MASS PROPERTIES/INTERFACE REQUIREMENTS ..... AF/NWCA

REQUIREMENTS

INFRASTRUCTURE ..... NNSA
FORCE STRUCTURE ..... USSTRATCOM

LABORATORY DESIGN OPTIONS

LLNL DESIGN OPTIONS ..... LLNL
LANL DESIGN OPTIONS ..... LANL
SNL DESIGN OPTIONS ..... SNL

OTHER ACTIVITIES

DISCUSSION ..... ALL
ACTION ITEM REVIEW ..... SSP/ITT
RRW POG MASTER MEETING SCHEDULE ..... ITT
NEXT MEETING

This Page is Intentionally Left Blank

APPENDIX B

LIST OF ATTENDEES

This Page is Intentionally Left Blank

KICKOFF MEETING OF THE RELIABLE REPLACEMENT WARHEAD PROJECT OFFICERS GROUP
ITT, AES DIVISION, ARLINGTON, VA

11 MAY 05

Exemption 6(b)(6) Privacy Act 1974

ATTENDEES LIST

KICKOFF MEETING OF THE RELIABLE REPLACEMENT WARHEAD PROJECT OFFICERS GROUP
ITT, AES DIVISION, ARLINGTON, VA

11 MAY 05

b(6)(6)
Privacy Act 1974

ATTENDEES LIST (Continued)

UNCLASSIFIED

UNCLASSIFIED

KICKOFF MEETING OF THE RELIABLE REPLACEMENT WARHEAD PROJECT OFFICERS GROUP
ITT, AES DIVISION, ARLINGTON, VA

11 MAY 05

ATTENDEES LIST (Continued)

b(6)/(6)
Privacy Act 1974

UNCLASSIFIED

UNCLASSIFIED

This Page is Intentionally Left Blank

APPENDIX C

RELIABLE REPLACEMENT WARHEAD PROJECT OFFICERS GROUP
ORGANIZATION CHARTS

This Page is Intentionally Left Blank

6(b)(6)
Privacy Act
1974

b(5)(6)
Privacy Act 1974

(b)(6) Privacy Act 1974

6(b)(6)
Privacy Act 1974

6(b)(6)
Privacy Act 1974

APPENDIX D

RRW BACKGROUND, TERMS OF REFERENCE, GOALS & OBJECTIVES, POG MEMBERSHIP AND SCHEDULE

[redacted]

6(b)(6)
Privacy Act
1974

6(b)(6)
Privacy Act 1974

This Page is Intentionally Left Blank

Background

- **Transformation study recommendations**
  - Approve a Joint Project Officer Group to oversee a laboratory design competition for an RRW for the first deployments on SLBMs
  - Direct a design concept competition for a minimum cost W76 risk reduction solution
  - Reduce the planned W76-1 refurbishment
- **NWC approved creation of a Joint Reliable Replacement Warhead Project Officers Group (RRW POG) on 23 March 2005**
- **NWC memorandum dated 11 April 2005 establishes a RRW POG**
  - Oversee a laboratory design competition for an RRW
  - First deployment on SLBM
  - 18 month study
  - Assess technical feasibility, design definition and cost
  - At the conclusion of the study, the RRW POG will present the preferred RRW design options and recommendations to the NWCSSC for approval

Terms of Reference (TOR)

- **Details membership, organization and conduct of the POG and the RRW study**
- **Transformation Coordinating Committee (TCC)**
  - Ad hoc group led by DATSD (NM) and NNSA NA-13
  - Members include representatives from OUSD(P)/(FP), The Joint Staff (J-5), USSTRATCOM, Navy (SSP), Air Force (XOS), NNSA NA-11, NNSA NA-12 and DTRA
  - RRW POG to work in cooperation with and receive advice from the TCC
  - Issues and conflicts within the POG and between the TCC and POG shall be transmitted to the Chairman, NWCSSC for resolution
- **NWC will make the final design selection based on**
  - POG developed options and recommendations
  - NNSA recommendations
  - User Service recommendations

Study Scope

Reliable Replacement Warhead (RRW)

- **Feasibility/design definition and cost study**
  - Laboratory design competition
  - First deployment on SLBMs
- **Considerations:**
  - FPU ~ 2012
  - Compatibility with ICBMs and potential to cancel/replace W78 LEP
  - Enable transformation to a responsive infrastructure
  - "Lifecycle" review of infrastructure requirements
  - Effect on the SLBM force structure and NNSA infrastructure resulting from reduction of the planned W76-1 refurbishment numbers through deployment of RRW

W76 Risk Reduction Warhead

- **Design Concept study**
  - Minimum cost W76 replacement as a backup for the RRW (risk reduction measure)
  - Laboratory design competition
  - FPU ~ 2010

Notional RRW Schedule

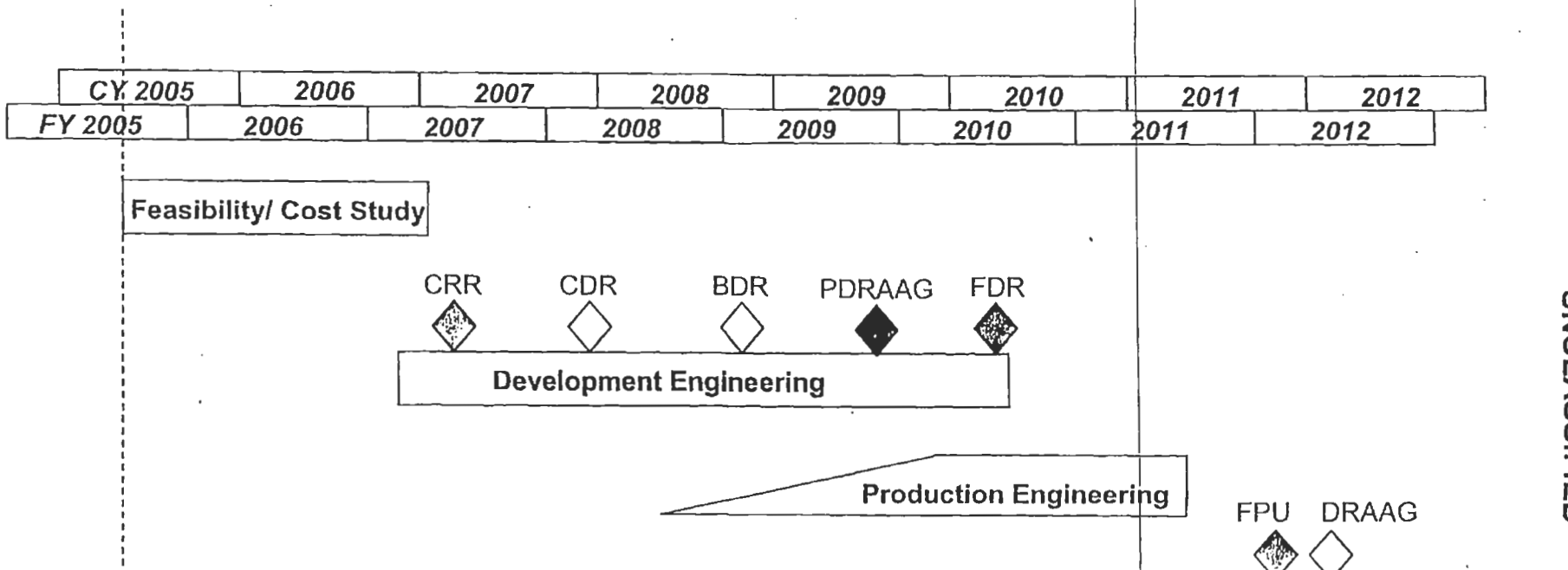

Key
CRR – Customer Requirements Review
CDR – Conceptual Design Review
BDR – Baseline Design Review
PDRAAG – Preliminary Design Review and Acceptance Group
FDR – Final Design Review
FPU – First Production Unit
DRAAG – Design Review and Acceptance Group
IOC – Initial Operational Capability

APPENDIX E

POG AUTHORITY, STRUCTURE, CHARTERS, & GROUNDRULES

[redacted]
Colorado Springs, CO

6(b)(6)
Privacy Act 1974

This Page is Intentionally Left Blank

POG Authority

- DOD and AEC (now NNSA) - Atomic Energy Act, 1953
- Memorandum of Understanding between ERDA (now NNSA) and the DOD on Nuclear Weapons Development Programs, 1975
- DOD Directive 3150.1 – Joint Nuclear Weapons Development Studies and Engineering Projects
- DOD Instruction 5030.55 – Joint AEC-DOD Nuclear Weapons Development Procedures

NWC approved creation of a RRW POG on 23 March 2005

Ground Rules

RRW

- **MK5 aeroshell (SLBM) / MK12A aeroshell (ICBM)**
- **D5 missile interfaces (SLBM) / MMIII missile interfaces (ICBM)**
- **MK4A fuze (SLBM) / _____ (ICBM)**
- **Yield - TBD**
- **Surety**
  - Insensitive high explosive
  - Fire resistant pit
  - Surety options (2 versions – shipping container / RBA)
    - Command disable
    - Permissive action link

W76 Risk Reduction

- **Must use existing NEP**

Notional RRW Organizational Chart

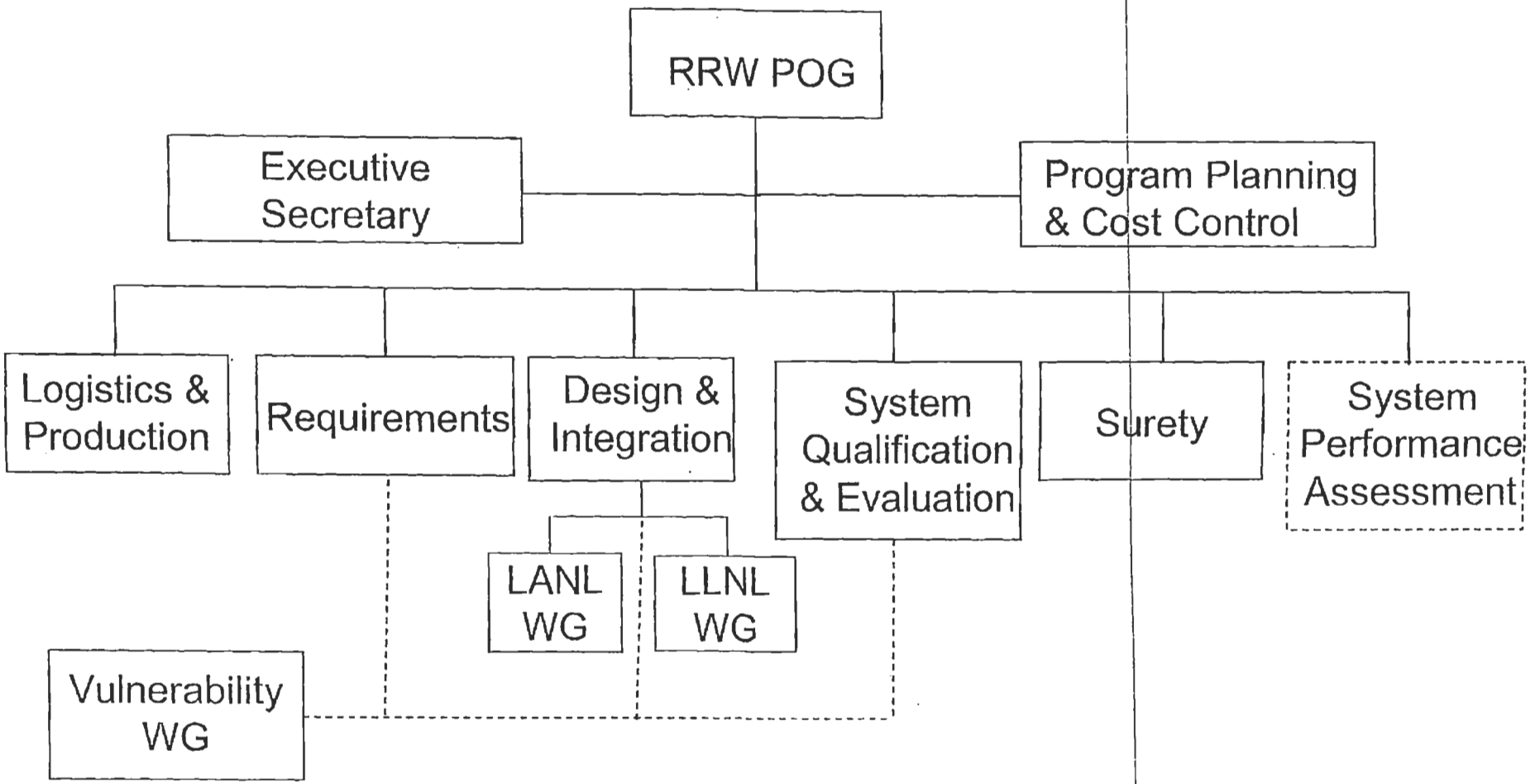

Logistics and Production Subcommittee

- "Lifecycle" review of DOD and DOE/NNSA infrastructure requirements to support the RRW from conceptual design to operational capability; through service life, retirement and dismantlement
- Describe how each design fosters and promotes infrastructure transformation
- Evaluate the production, deployment, and logistics support for RRW
- Develop facility requirements
- Develop Joint Logistics and Production Plans

System Qualification and Evaluation Subcommittee

- **Coordinate the planning, scheduling, and implementation of the verification, validation, qualification, certification, and acceptance of the RRW**
- **Prepare, update and maintain the System Qualification/Certification Plan**
  - Integrated Test Plan
  - Joint Modeling & Simulation Plan
- **Coordinate the planning, scheduling, implementation & evaluation of joint DOD/DOE tests**
  - Joint Ground Tests
  - Joint Flight Tests
- **Coordinate the use of Modeling & Simulation**
  - Monitor development of M&S to be used as basis for qualification
  - Monitor Verification, Validation & Accreditation of Models
  - Monitor Verification, Validation & Certification of Data

Surety Subcommittee

- Review RRW / W76 Risk Reduction options to ensure surety (safety, security, reliability, control) attributes meet the requirements of the MC/STS
- Produce a prioritized list of nuclear/HE safety concerns for each warhead candidate
- Compare warhead candidates from a INRAD perspective
- Identify areas where special efforts and/or testing may be warranted to satisfy existing safety criteria
- Recommend tests to the System Qualification & Evaluation SC to evaluate surety attributes
- Coordinate the planning, scheduling and implementation of Nuclear weapon safety assessments
- Coordinate the planning, scheduling and implementation of Operational Safety Reviews

Vulnerability Working Group

- Assist the Requirements Subcommittee develop Hostile and Fratricide environment requirements
- Assist the Design & Integration Subcommittee assess the design options for vulnerability to hostile and fratricide environments
- Assist the System Qualification and Evaluation Subcommittee define test and evaluation requirements for hostile and fratricide requirements

RRW Plan of Action and Milestones

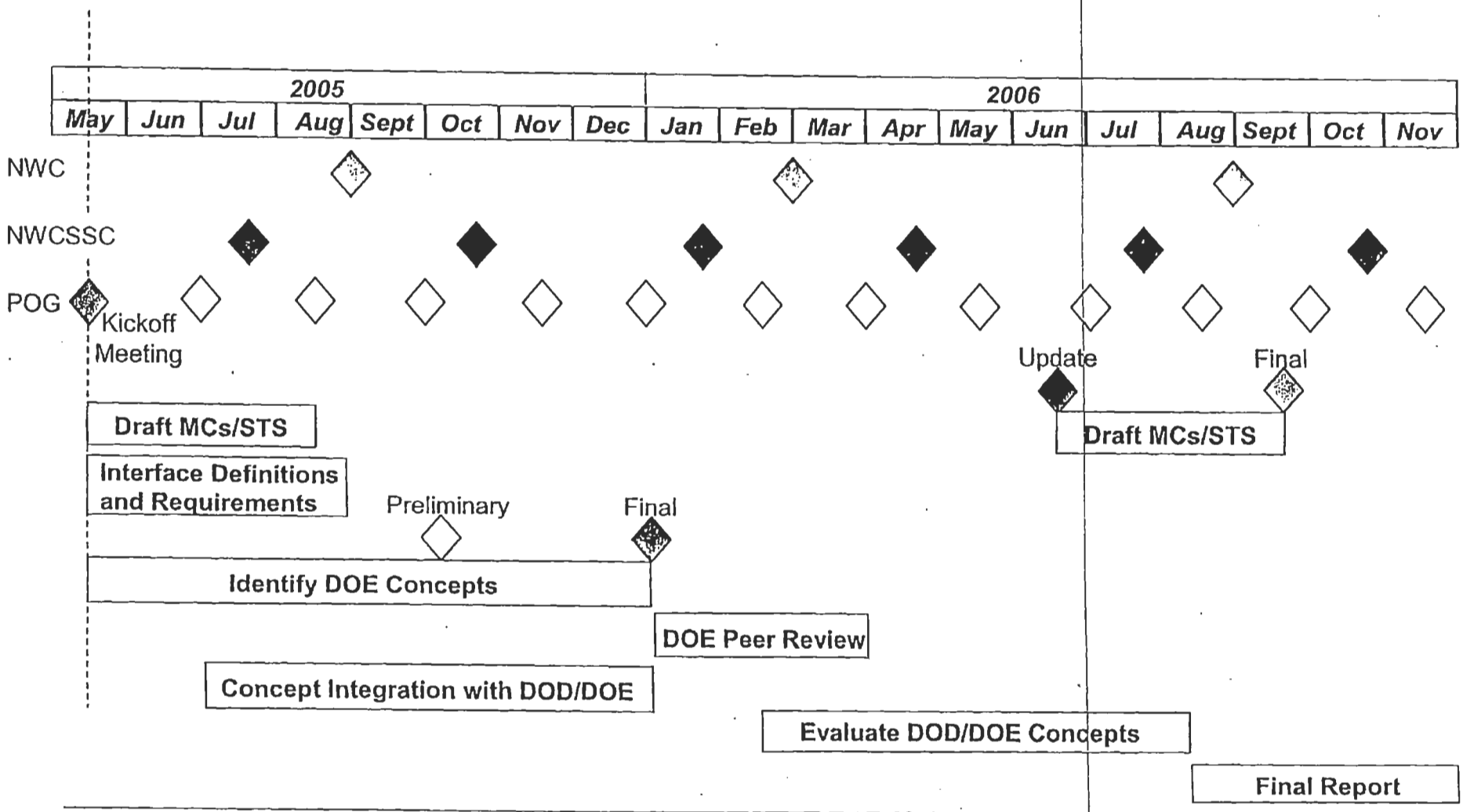

UNCLASSIFIED

APPENDIX F

MK4A FUZE AND AF&F REQUIREMENTS

[redacted]
Albuquerque, NM

6(b)(6)
Privacy Act
1974

This Page is Intentionally Left Blank

Mk4A Fuze/AF&F Requirements

W76-1/MK4A
SINGLE NWC
SSP LMSS
TRIDENT II

~~FOR OFFICIAL USE ONLY~~

b(b)/b)
Privacy Act
1974

~~FOR OFFICIAL USE ONLY~~

Sandia is a multiprogram laboratory operated by Sandia Corporation, a Lockheed Martin Company, for the United States Department of Energy's National Nuclear Security Administration under contract DE-AC04-94AL85000.

OFFICIAL USE ONLY
May be exempt from public release under the Freedom of Information Act (5 U.S.C. 552), exemption number and category 2, Circumvention of Statute
Department of Energy review required before public release
Name/Org: Brad Godfrey/9741 Date: May 5, 2005
Guidance (if applicable) N/A

Sandia National Laboratories

(b)(5)

Arming, Fuzing & Firing System

FOR OFFICIAL USE ONLY

FOR OFFICIAL USE ONLY

W76-1/MK4A
TRIDENT II

Mechanical Considerations

- Mounts (locations)
  - AF&F
    - Mk4A AF&F fits in Mk5 AF&F envelope
    - Shock transmissibility
  - Neutron generator
  - Gas bottle
- Cables & connectors
  - New preset cable (length)
  - New NG cabling
  - Re-route cable runs
  - May be able to re-use LAC

~~FOR OFFICIAL USE ONLY~~

~~FOR OFFICIAL USE ONLY~~

(b)(5)

Electrical Considerations

~~FOR OFFICIAL USE ONLY~~

~~FOR OFFICIAL USE ONLY~~

Other Warhead Considerations

- Fireset
  - Implements safety theme
  - Possible detonator compatibility issues
  - Enhanced surety tradeoffs
- Hostile protection
  - Current implementation appears OK
  - Fireset changes may require re-qualification
- NG timing issues (re-qualification)
- New JTA likely

~~FOR OFFICIAL USE ONLY~~

~~FOR OFFICIAL USE ONLY~~

Observations

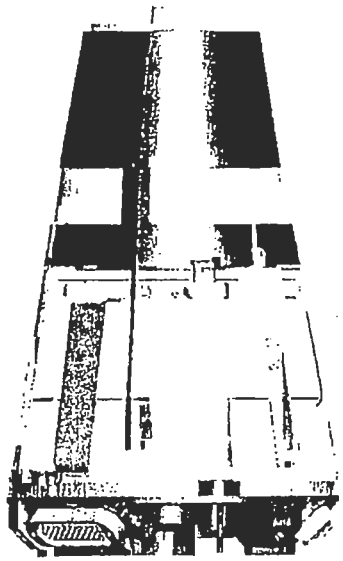

(b)(5)

~~FOR OFFICIAL USE ONLY~~

~~FOR OFFICIAL USE ONLY~~

This Page is Intentionally Left Blank

APPENDIX G

NAVY MASS PROPERTIES AND INTERFACE REQUIREMENTS

[redacted]

Exemption 6
(b)(6)

Privacy Act
1974

This Page is Intentionally Left Blank

Reliable Replacement Warhead (RRW) Kickoff Meeting

Navy Mass Properties / Interface Requirements

[redacted]

11 May 2005

Privacy Act 1974 Exemption 6 (b)(6)

Distribution Limited

Further distribution by any holder may be made only with specific prior approval of:

Strategic Systems Programs
Nebraska Avenue Complex
3801 Nebraska Avenue, NW
Washington, DC 20393-5230

FBM

Reentry Systems Engineering

Topics

- Navy Mk5/D5 Interface Requirements
- Navy Mk5/D5 Mass Property Constraints
- Mk5/D5 Reentry Body and Release Assembly Structure

FBM

Reentry Systems Engineering

Mk5/D5 Interface Requirements

- RRW will require Interface Control Drawings (ICDs) similar to Mk5/W88 & Mk5B/PRP (SWPP)
  - Identifies interface requirements within Reentry Body (RB) between DoD & NNSA
- RRW will require Physical & Functional ICDs for the following RB types:
  - War Reserve (WR)
  - Production Flight Test configurations
  - Trainer Reentry Bodies will either comply with WR or Flight Test configuration ICDs

FBM

Reentry Systems Engineering

Mk5/D5 Mass Property Constraints

- Mass property parametric studies of Mk5 Aeroshell & D5 Missile with heavier warheads were performed
  - Alternate Warhead Phase 2 Feasibility Study 1992-94
- Following chart shows Reentry Body (RB) weight & longitudinal CG constraints for Mk5/D5 configuration
- Release Assembly (RA) has lower structural margins for Test Missile configuration

FBM

Reentry Systems Engineering

Mk5/D5 Mass Property Boundaries

(5 Body Configuration - Worst Case)

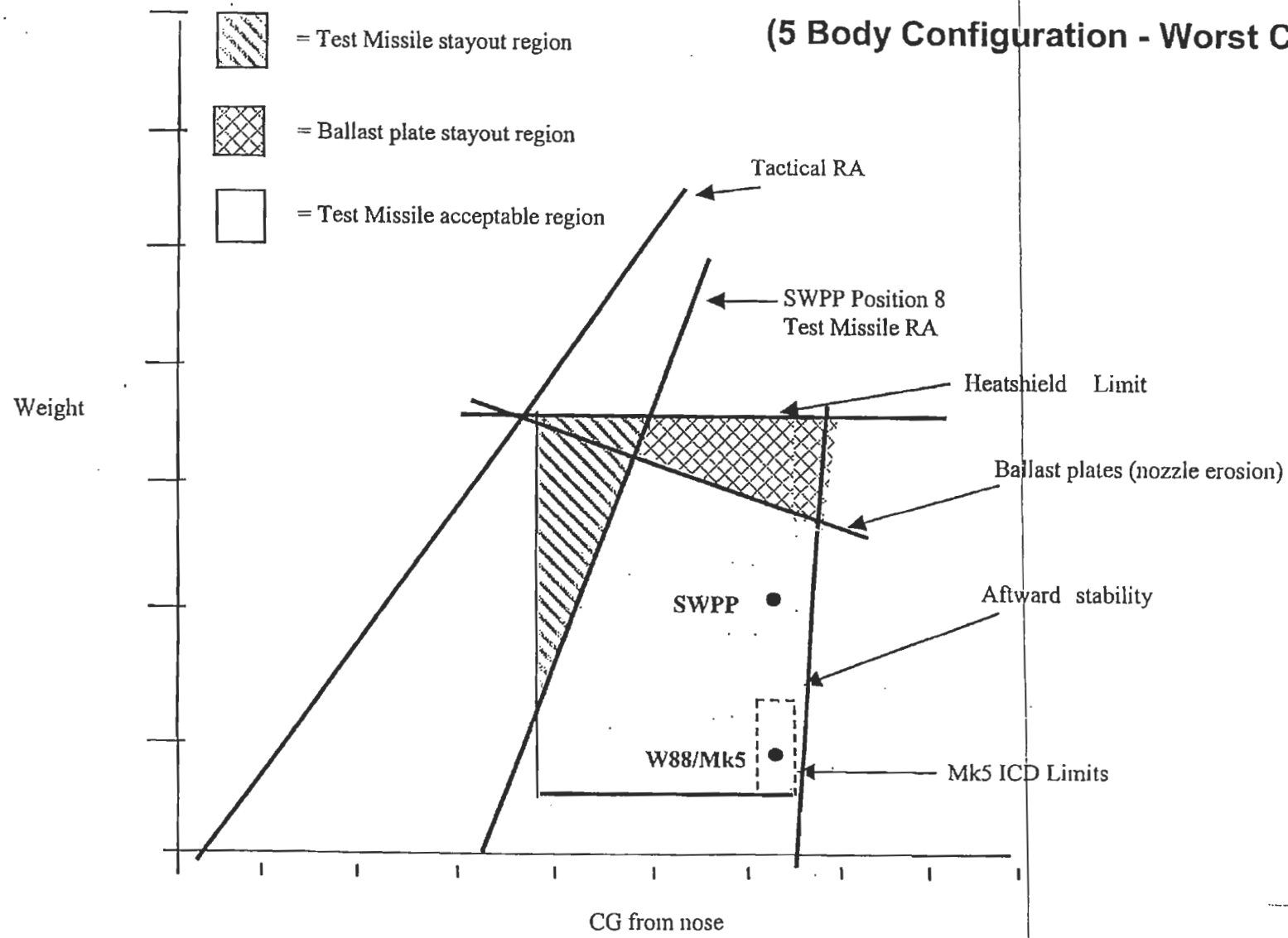

FBM

Reentry Systems Engineering

Mk5 Reentry Body Assembly (RBA)

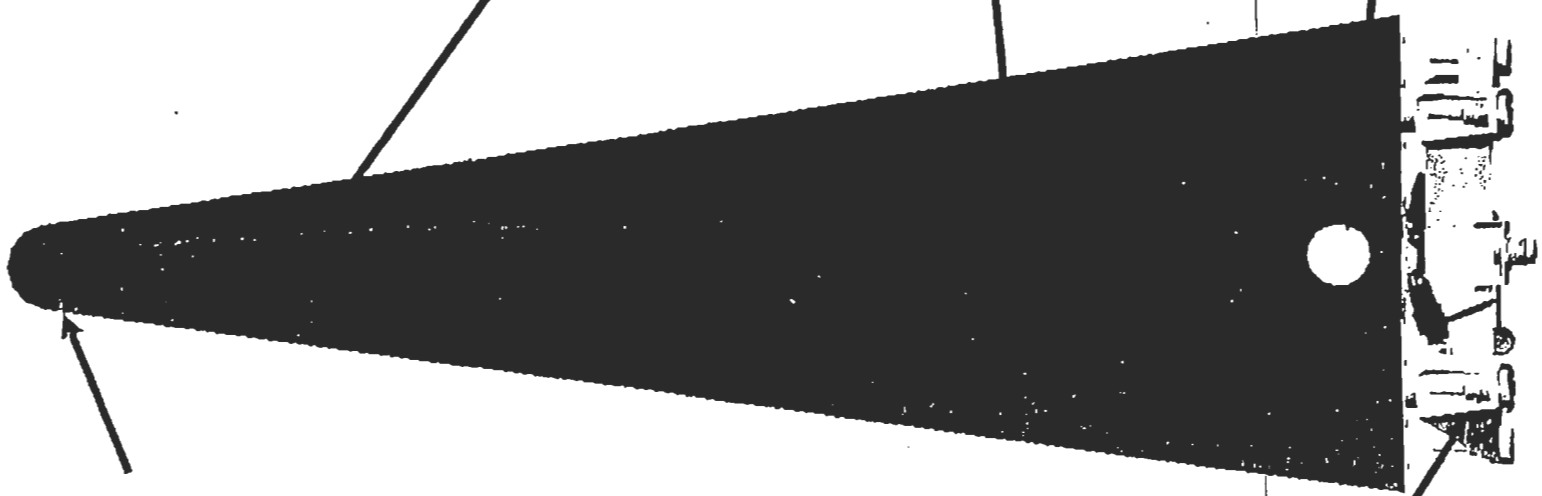

NOT TO SCALE

FBM

Reentry Systems Engineering

Mk5 Release Assembly

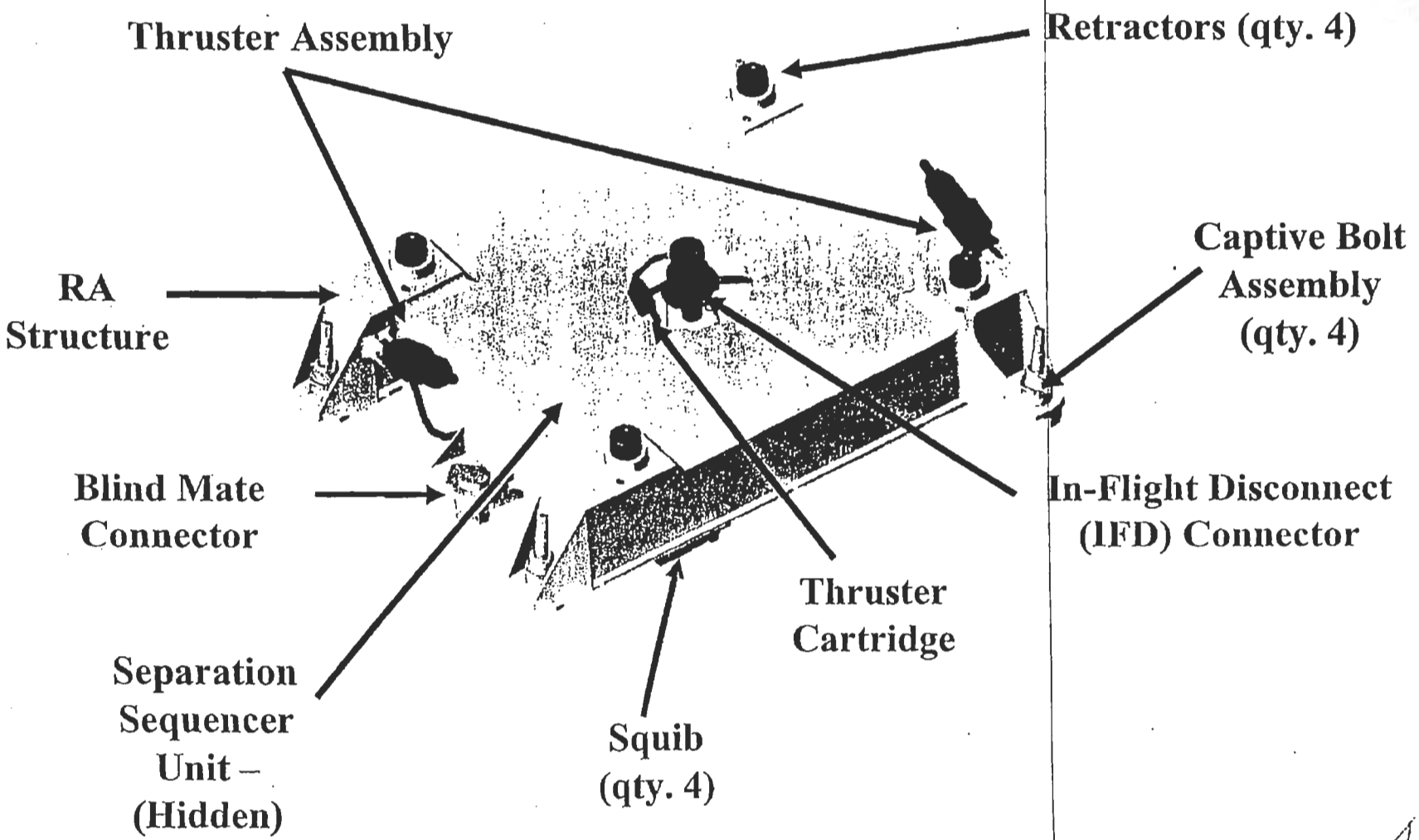

This Page is Intentionally Left Blank

APPENDIX H

MK12A FUZE / AF&F AND MASS PROPERTIES / INFERFACE REQUIREMENTS (U)

[redacted]

Albuquerque, NM

Exemption 6
(b)(6)
Privacy Act
1974

This Page is Intentionally Left Blank

U.S. AIR FORCE

Overview

- W78/mK12A Characteristics
- W78/Mk12A Military Characteristics
- W78 Military Characteristics and Stockpile-To-Target Sequence
- Environment
- Mk12A Reentry Vehicle System
- Mk12A Dimensions and Mass Properties
- Mk12A Arming and Fuzing System
- System Operations and Schematic
- Environmental Requirements
- Conclusion

~~SECRET RESTRICTED DATA/CNWDI~~

~~SECRET RESTRICTED DATA/CNWDI~~

Sec 6.2
RD

W78/Mk12A Characteristics (U)

~~SECRET RESTRICTED DATA / CNWDI~~

H-5

U.S. AIR FORCE

W78/Mk12A Military Characteristics (U)

- Nuclear safety
- DOE and DoD components compatible w/ Mk12A
- Operational reliability
- Survivability in normal environments
- Yield
- Security
- Minimum maintenance
- Operational simplicity

~~SECRET RESTRICTED DATA/CNWDI~~

~~SECRET RESTRICTED DATA/CNWDI~~

Military Characteristics & Stockpile-To-Target Sequence (U)

U.S. AIR FORCE

DOE b(3)

~~SECRET RESTRICTED DATA/CNWDI~~

H-7

62 RD

~~SECRET RESTRICTED DATA/CNWDI~~

U.S. AIR FORCE

Environment (U)

Exempt from release

U.S. AIR FORCE

Mk12A RV External Dimension and Mass Properties (U)

Sec 6.2 RD

DOE 6(3)

~~SECRET RESTRICTED DATA / ONWBI~~

~~SECRET RESTRICTED DATA / ONWBI~~

U.S. AIR FORCE

Mk12A Arming and Fuzing Assembly (U)

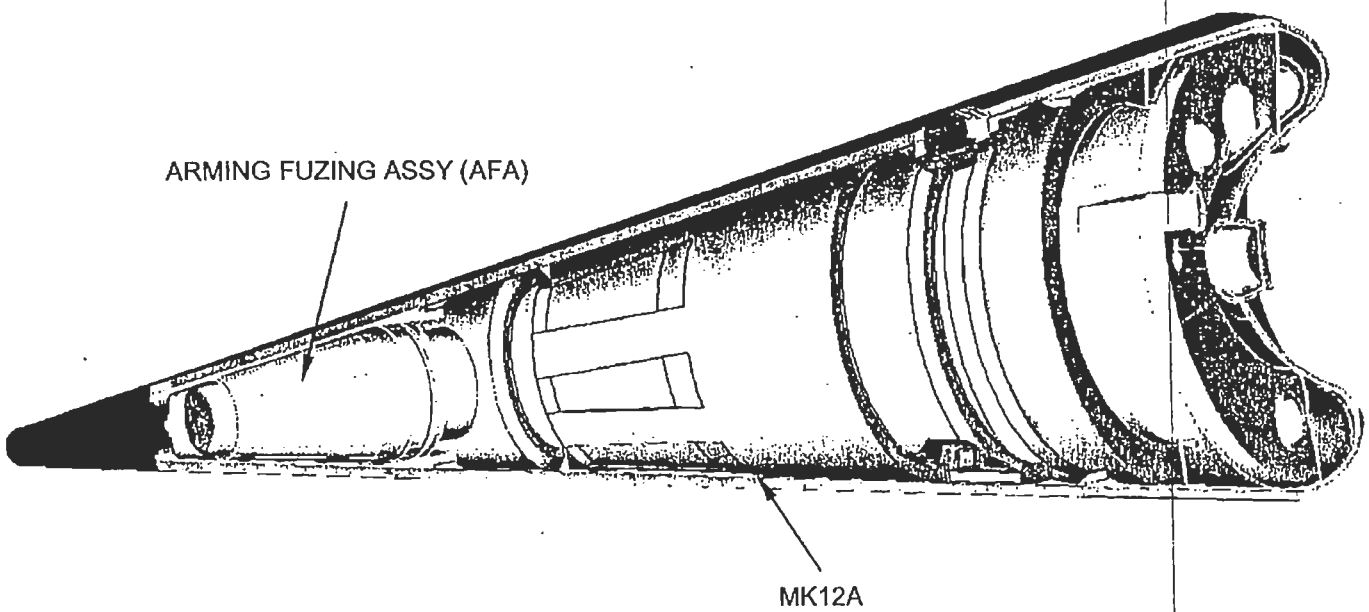

~~SECRET RESTRICTED DATA/CNWDI~~

~~SECRET RESTRICTED DATA/CNWDI~~

U.S. AIR FORCE

Arming and Fuzing System

- High Impulse Transducer (HIT)
- Arming and Fuzing Assembly (AFA)
  - Battery Activation System (BAS)
    - Pressure Activated Valve (PAV)
    - Remotely Activated Battery
  - Command Logic Controller (CLC)
  - Force Balance Integrating Accelerometer (FBIA)
  - Power Conditioner (PC)
  - Radar Fuze Assembly
- Warhead Firing System

SECRET/RESTRICTED DATA/CNWDI

SECRET/RESTRICTED DATA/CNWDI

MK12A Forward Section

U.S. AIR FORCE

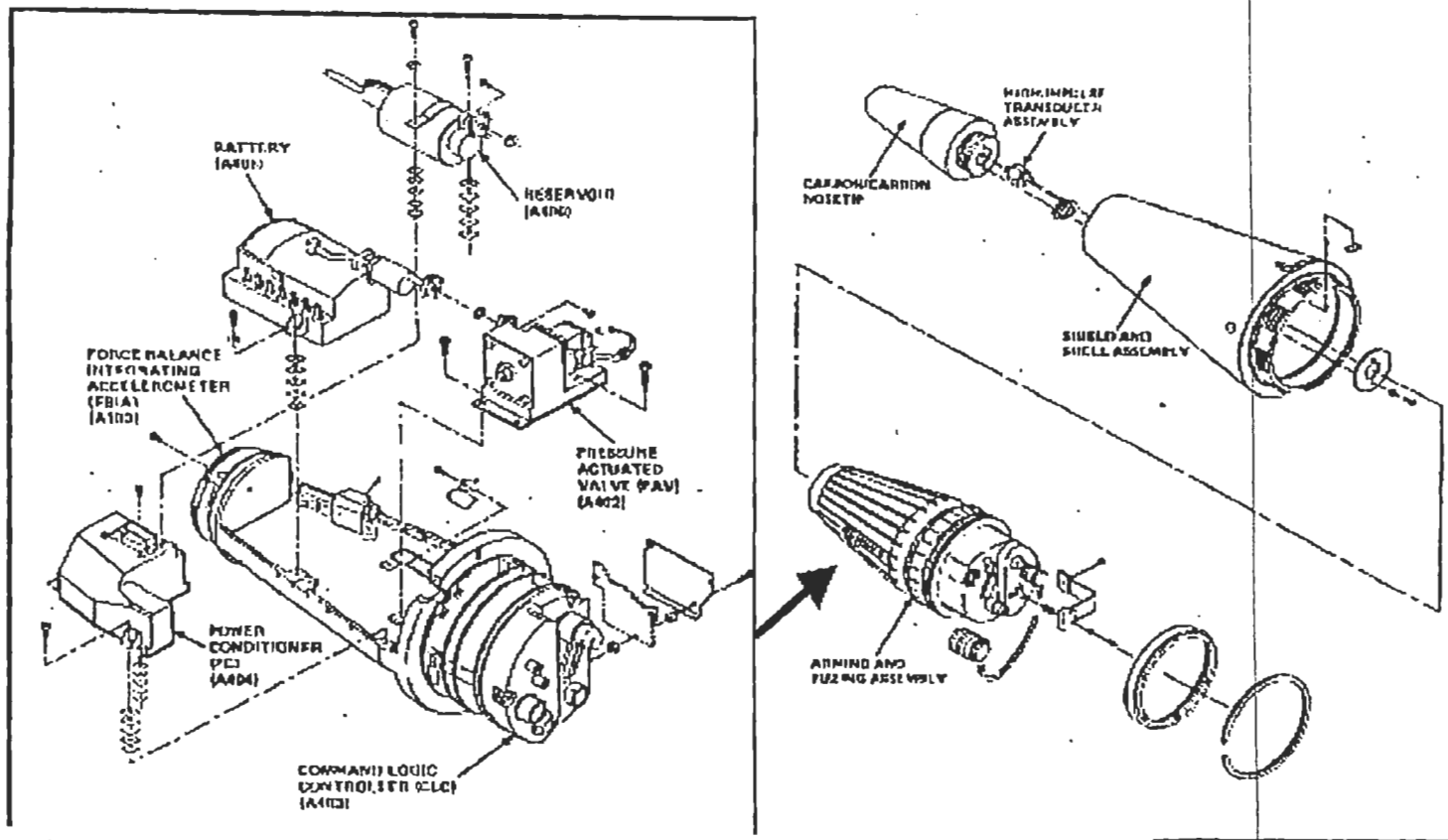

UNCLASSIFIED

SECRET RESTRICTED DATA / CNWDI

SECRET RESTRICTED DATA / CNWDI

U.S. AIR FORCE

Mk12A Arming and Fuzing System (U)

~~SECRET RESTRICTED DATA / CNWDI~~

1.4 (a)(c)

DOE 5(3)

Sec 62 RD

~~SECRET RESTRICTED DATA / CNWDI~~

U.S. AIR FORCE

Sec 62 RD 1.4(a)(e)

Arming and Fuzing System Operation (cont'd) (U)

b(3)

~~SECRET RESTRICTED DATA / CNWDI~~

~~SECRET RESTRICTED DATA / CNWDI~~

U.S. AIR FORCE

W78 Arming and Fuzing System Sequence of Events (U)

DOE b(3)

6.2 RD

~~SECRET RESTRICTED DATA / CNWDI~~

~~SECRET RESTRICTED DATA / CNWDI~~

U.S. AIR FORCE

W78 Arming and Fuzing System Operations Schematic

6.2 RD

DOE 6(3)

~~SECRET RESTRICTED DATA / CNWDI~~

~~SECRET RESTRICTED DATA / CNWDI~~

U.S. AIR FORCE

Conclusion

- Military Characteristics
- Platform Requirements and Mass Properties
- Arming and Fuzing System
- Environmental Requirements

~~SECRET RESTRICTED DATA/CNWDI~~

~~SECRET RESTRICTED DATA/CNWDI~~

This Page is Intentionally Left Blank

APPENDIX I

NNSA RESPONSIVE INFRASTRUCTURE IMPLEMENTATION

Exemption 6 (b)(6)

Privacy Act 1974

This Page is Intentionally Left Blank

National Nuclear Security Administration

NNSA Responsive Infrastructure Implementation

Presented to

Reliable Replacement Warhead (RRW)

Project Officers Group (POG) Kickoff Meeting

by

[redacted]

Exemption 6(b)(6)
Privacy Act 1974

National Nuclear Security Administration (NNSA)

May 11, 2005

Responsive Infrastructure Implementation

National Nuclear Security Administration

Definition of an NNSA Responsive Infrastructure:

Responsive infrastructure includes people, facilities, and practices at agile National Laboratories and production plants that meet identified and unanticipated nuclear security needs related to the nuclear weapon stockpile in a timely manner at a sustainable cost.

Objective of a Responsive Infrastructure Implementation:

To manage the strategy to implement a responsive nuclear weapons infrastructure that supports transformation of an aging stockpile, is resilient for unanticipated events, and meets future requirements in a timely and agile manner at lower cost.

Responsive Infrastructure (RI) NNSA Management Structure

National Nuclear Security Administration

Senior Responsible Officer
D'Agostino, NA-10, Acting
Deputy Administrator for
Defense Programs

Responsive
Infrastructure
Steering
Committee (RISC)
Schoenbauer, NA-12/
Crandall, NA-11,
Co-Chairs

Executive Director
Allen, NA-10

- Planning and initiating RI Implementation
- Interfacing with Reliable Replacement Warhead (RRW) Project Officers Group (POG) & DoD RI transformation initiatives
- Integrating RI goals with Directed Stockpile Work (DSW), Campaigns, Readiness in Technical Base and Facilities (RTBF) activities

Responsive Infrastructure (RI) Implementation Approach

National Nuclear Security Administration

- Transformation of the Stockpile
- History/Status of the Nuclear Weapons Enterprise
- 2005 SEAB
- DoD Requirements
- Congress
- Vision of the End State
- External Constraints

RI Implementation

- Manage the vision and track progress towards specific, measurable goals:
  1. Establish a baseline.
  2. Establish near, mid, & long-term goals.
  3. Validate goals with DoD.
  4. Evaluate alternatives.
  5. Involve external stakeholders.
  6. Establish plans for implementation.
  7. Measure progress and revise plans.
- Facilitate decisions & recommendations while ensuring National Environmental Policy Act compliance.
- Start implementation initiatives:
  - People
  - Products & processes
  - Facilities & equipment
  - Business practices
  - Governance
- Verify & communicate results.

→ Desired End State Of The Enterprise

5

Characteristics of Current Infrastructure

National Nuclear Security Administration

- Full weapon development process has not been exercised recently
  - Focus of life extension programs has been on replacement of parts.
  - Limited data on development in modern safety, security, and no testing era.
- Fixed costs dominate:
  - For the most part, the NNSA Nuclear Weapons Complex has been capability-driven rather than capacity-limited during the past 15 years.
  - Maintaining a broad range of capabilities results in high fixed costs that may no longer be sustainable.
- Safety and security compliance are major factors
  - Significant impact on responsiveness, cost, and future options.
- Stockpile transformation is essential to achieving a responsive infrastructure.
  - Infrastructure must be exercised to be responsive.
  - Right-sizing to reduce cost and increase responsiveness depends on the long-term product requirements of the enterprise.

inistration

This Page is Intentionally Left Blank

APPENDIX J

FORCE STRUCTURE REQUIREMENTS (U)

Exemption 6(5)(6)

Privacy Act 1974

This Page is Intentionally Left Blank

AGENDA

- 2012 Ballistic Missile Force Structure
- Notional Ballistic Missile Force Structure with RRW
- RRW Yield Analysis
- Warfighter Desired RRW Attributes

SECRET FORMERLY RESTRICTED DATA

SECRET FORMERLY RESTRICTED DATA

2012 FORCE STRUCTURE REQUIREMENTS

DOE b(3)

Sec 6.2 FRD

NOTIONAL FORCE STRUCTURE WITH RRW

DOE b(3)

Sec 6.2
FRD

~~SECRET FORMERLY RESTRICTED DATA~~

~~SECRET FORMERLY RESTRICTED DATA~~

RRW YIELD TRADE ANALYSIS

DOE b(3)

~~SECRET/FORMERLY RESTRICTED DATA~~

~~SECRET/FORMERLY RESTRICTED DATA~~

J-7

Sec 6.2 FRD

RRW YIELD TRADE ANALYSIS RESULTS

DOE 5(3)

62 FRD

WARFIGHTER DESIRED RRW ATTRIBUTES

DOE b(3)

Sec 6.2 FRD

[redacted]

- Integrated, enhanced surety features
- Compatible with ICBM delivery system
  - Compatible with Mk12A
  - Size must accommodate up to 3 RVs per ballistic missile

~~SECRET FORMERLY RESTRICTED DATA~~

~~SECRET FORMERLY RESTRICTED DATA~~

WARFIGHTER CONCERNS

- Political will to fully execute concept and reap potential benefits
- Success of infrastructure recapitalization efforts
- Transformation not complete until 2030+
- Ability to meet projected FPU and IOC dates
- Operational risks associated with concept and transformation
- May require delivery system modifications / improvements

1.4 (a) (h)

- Must be aligned with JCIDS process

~~SECRET FORMERLY RESTRICTED DATA~~

~~SECRET FORMERLY RESTRICTED DATA~~

J-11

~~UNCLASSIFIED~~

This Page is Intentionally Left Blank

This Page is Intentionally Left Blank

LLNL Design Options for RRW POG Kickoff (U)

As presented to:
RRW POG Kickoff Meeting
11 May 2005

OFFICIAL USE ONLY

May be exempt from public release under the Freedom of Information Act (5 U.S.C 552), exemption and category:
Exemption 5: Deliberative Process Privilege
Department of Energy review required before public release
Date: 11 May 2005
Name/org: K. Henry O'Brien, DNT
Guidance (if applicable):

Exemption 6(b)(6)

Privacy Act 1974

Defense and Nuclear Technologies

This work was done under the auspices of the Department of Energy by the University of California Lawrence Livermore National Laboratory under Contract No. W-7405-Eng-48

Lawrence Livermore National Laboratory, P.O. Box 808, Livermore, CA 94551

National Nuclear Security Administration

~~Official Use Only~~

~~FOR OFFICIAL USE ONLY~~

~~FOR OFFICIAL USE ONLY~~

Lawrence Livermore National Laboratory

Outline

- RRW goals
- LLNL design approach
- Planned activities
- Summary

~~FOR OFFICIAL USE ONLY~~

~~FOR OFFICIAL USE ONLY~~

National Nuclear Security Administration

~~Official Use Only~~

Lawrence Livermore National Laboratory

LLNL RRW design approach

b(5)

- Engineering weaponization
  - Ease of manufacture and service
  - Mk5 integration and ICBM compatibility
  - Accommodate advanced surety as an option
- Quantification of Margins and Uncertainties (QMU) drives design and provides certification strategy

~~FOR OFFICIAL USE ONLY~~

~~FOR OFFICIAL USE ONLY~~

Lawrence Livermore National Laboratory

LLNL RRW manufacturing approach

- Pit manufacturing development on site and on the team
  - Tied with LANL manufacturing through pit campaign
- New LLNL-developed safe detonator much more manufacturable than MSAD
- Responsive infrastructure projects
  - Rapid case design and manufacture
- Collaboration with plants must expand during study
- Fully integrate RRW and Responsive Infrastructure
- Dynamic Enterprise Modeling is used to collate data on enterprise focus on high-leverage areas for infrastructure transformation

~~FOR OFFICIAL USE ONLY~~

~~FOR OFFICIAL USE ONLY~~

Lawrence Livermore National Laboratory

Minimum cost W76 risk reduction options

- Concepts discussed in run-up to RRW POG are straightforward
- Review previous studies that have assessed W76 backup options
- Update previous studies
  - —Candidate warheads are aging
  - —Stockpile Stewardship Program findings need to be incorporated into concept assessments

~~FOR OFFICIAL USE ONLY~~

~~FOR OFFICIAL USE ONLY~~

Lawrence Livermore National Laboratory

Summary

- Reliable Replacement Warhead (RRW) design studies underway
- Beginning weapon concept integration process
- Limited experimental work on preliminary design and manufacturing concepts planned to be accomplished in course of 18-month study
- Ready to engage POG and POG Subgroups and Working Groups

~~FOR OFFICIAL USE ONLY~~

~~FOR OFFICIAL USE ONLY~~

APPENDIX L

LANL DESIGN OPTIONS

(b)(6)
Privacy Act
1974

This Page is Intentionally Left Blank

Opening Comments

- RRW is an exciting opportunity for the nation and has captured significant national interest, we are excited to see it develop as a formal study
- It requires design laboratories to partner with manufacturing agencies and end users to develop engineered solutions
- The study period coincides with certification efforts on the W76-1 and the W88— this provides a unique *design* opportunity to augment the *analysis* efforts underway

RRW is seen as both a product and a process, with varying expectations from each of four primary customers

~~FOR OFFICIAL USE ONLY~~

~~FOR OFFICIAL USE ONLY~~

~~Privileged Information: May Not Be Subject to Disclosure under FOIA or Other Unauthorized Use~~

[illegible] Month Study

Design data package for preferred RRW-1 options

- Design options based on requirements (MCs, STS, surety, etc.)
  - Develop SLBM designs using modular design approach
  - Provide bridge to later design efforts that further enhance surety and are compatible with ICBM requirements
  - Key material decisions need to be addressed early in the study based on tradeoffs between cost, availability, ease of manufacture, ease of certification and performance requirements
- We are considering a broad suite of conceptual designs, some of which are based on the success of the earlier Strategic Warhead Protection Program (SWPP)

Development, Production, & Certification Plan

- Development & Production planning
  - Manufacturability is the interface between RRW as a product and a process!
  - LANL will work with plants and suppliers to establish & codify advantages and disadvantages for manufacturability
- Certification
  - Strategy and plan for preferred option will be based on Quantification of Margin and Uncertainties (QMU) methodology established on the W76-1 and W88 pit certification efforts.

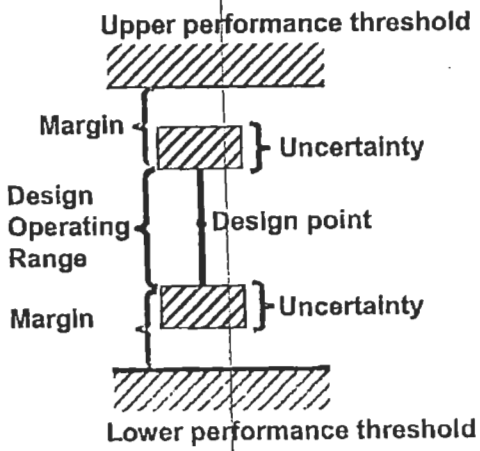

~~FOR OFFICIAL USE ONLY~~

~~FOR OFFICIAL USE ONLY~~

~~Privileged Information – May Not Be Subject to Disclosure under FOIA or OPEN or Other Unauthorized Use~~

JPOG III Month Study

Life cycle cost report on preferred design

- Recommend establishing subgroup for enterprise modeling and life cycle cost analysis—if intended for infrastructure working group to address, include in charter
  - Subgroup to establish common cost algorithms for design labs, production plants, and potentially DoD facilities
  - Subgroup responsible for consistent and fair comparisons for whatever model(s) is used

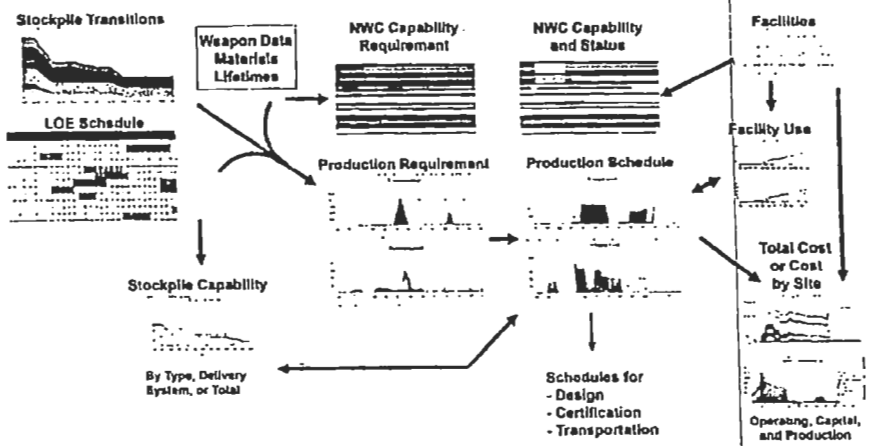

Conclusion: Key Discussion Points

- ***Alignment of customer expectations with scope, schedule and budget***
- Scope:
  - System requirements
  - Surety requirements
  - Material selection and certification
  - Extent of experimental validation
- Schedule
  - The deliverables are order dependent and require a significant amount of integration across the complex in order to deliver a quality product
- Budget
  - The present budget is a constraint when spread across the list of deliverables
- Expectations: What do we see as the next steps at the end of the study and *what level of confidence is necessary in order to take those steps*?

APPENDIX M

SNL DESIGN OPTIONS

[redacted]

b(6)

Privacy Act 1974

This Page is Intentionally Left Blank

Comprehensive RRW systems engineering enables desired capabilities while minimizing risk

- Advanced surety technologies eliminate the surety burden on firing systems
  - Advanced surety technologies are deeply buried
  - Deeply buried surety eliminates bypasses and frees up significant weight and volume
- This available weight and volume can enable desired capabilities
  - Eliminate MAR exceptions (NDSE)
  - Reduce cost
  - Robustness (increased static margin, range)
  - Increase LLCE interval
  - Other capabilities
- Comprehensive system engineering across the entire weapon system lifecycle enables full exploitation of the opportunity presented by RRW

Advanced surety technologies enable reductions in the cost, weight, and volume of firing systems.

Sec 6.2 SFRD

DOE 6(3)

~~FOR OFFICIAL USE ONLY~~

M-7

~~SECRET~~

~~FOR OFFICIAL USE ONLY~~

~~SECRET~~

Sandia National Laboratories

DOE b(3)

~~Official Use Only~~

Sec 6.2 FRD

~~CONFIDENTIAL~~ FRD

~~FOR OFFICIAL USE ONLY~~

M-8

~~FOR OFFICIAL USE ONLY~~

~~CONFIDENTIAL~~ FRD

Sandia National Laboratories

~~Official Use Only~~

"Re-integration" will be required for RRW to successfully transform the enterprise

RRW solutions

- Weapon systems
  - joint systems
  - modular payloads
- Surety
  - use control / security systems integration
  - inherently sure systems
- Weapon design
  - robust margins
  - single stage options
  - ease of manufacture
- Stewardship approach
  - surveillance alternatives
  - field replaceable components

Re-integration required

DoD/DOE impacts

- Lower cost enterprise
  - fewer weapons, types
  - less costly infrastructure
  - reduced overhead (security, surveillance, M&O,...)
- Robustly secure
  - insensitive to DBT
  - flexible response options
- Mission effectiveness
  - flexible to changes
  - robust to failures
- Sustained confidence
  - demonstrated capabilities
  - less "tightly wound"

RRW is the first opportunity to fundamentally reshape surety implementation in response to the post 9/11 environment

- Advanced weapon surety enables transformation by significantly reducing the possibility of unauthorized nuclear detonation
  - **Advanced surety can increasing responsiveness by eliminating hazards (NDSE and NBE throughout the life-cycle)**
  - **Advanced surety enables balanced focus across access denial, containment, and recovery to significantly reduce both risk and life-cycle cost**
- Advanced surety can be implemented without significant impact to military capabilities
- Previous experience has convinced us that these technologies can be implemented with minimal risk and without UGT

Excerpt from the RRW TOR:
"Weapons that are safe and secure by design"

APPENDIX N

ACTION ITEMS

This Page is Intentionally Left Blank

ACTION ITEMS from the RELIABLE REPLACEMENT WARHEAD
PROJECT OFFICERS GROUP KICKOFF MEETING
ITT AES, Arlington, VA
11 May 2005

(Status as of 1 June 2005)

AI 1-1	NNSA (NA-11)/ ATSD(NM)	Provide clarification as to what constitutes a "new" weapon. ECD: Next POG meeting STATUS: OPEN
AI 1-2	POG Principals	Provide names of members for each subcommittee and working group. ECD: 20 May 05 ~~STATUS: CLOSED~~
AI 1-3	POG Principals	Provide distribution list for general POG materials. ECD: 20 May 05 STATUS: OPEN
AI 1-4	ITT	Distribute USN and USAF MCs and STS as appropriate. ECD: 20 May 05 STATUS: CLOSED
AI 1-5	RSC	Brief POG on consolidated requirements. ECD: Next POG meeting STATUS: OPEN
AI 1-6	RSC	Distribute draft RRW MCs/STS that reflect consolidated requirements. ECD: 6-8 weeks STATUS: OPEN
AI 1-7	SNL/NM	Determine MK4A AF&F radar performance in MK5 shell. SNL/NM will provide proposed ECD no later than 16 May 2005. (Completed) ECD: 30 Jun 05 STATUS: OPEN
AI 1-8	USAF/XOS	Identify USAF fuze for RRW study. ECD: Next POG meeting STATUS: OPEN
AI 1-9	All SC/WG	Review draft charters; present revised charter to POG for review/approval. ECD: Next POG meeting STATUS: OPEN
AI 1-10	POG Principals	Provide list of names for SIGMA 15 access.(20 May 05) Principals, alternates and key significant representatives. ECD: Next POG meeting STATUS: OPEN

This Page is Intentionally Left Blank

APPENDIX O

RELIABLE REPLACEMENT WARHEAD PROJECT OFFICERS GROUP
MASTER MEETING SCHEDULE

This Page is Intentionally Left Blank

Reliable Replacement Warhead Project Officers Group Schedule

ID	Task Name	2005 Jan	Feb	Mar	Apr	May	Jun	Jul	Aug	Sep	Oct	Nov	Dec	Jan	Feb
1	**AO Briefings**														
2	RRW POG Plan					RRW POG Plan ◇ 6/28									
3	RRW POG Status								RRW POG Status ◇ 10/4						
4	RRW POG Status										RRW POG Status ◇ 1/3				
5															
6	**SSC Briefings**														
7	RRW POG Plan					RRW POG Plan ◇ 7/14									
8	RRW POG Status								RRW POG Status ◇ 10/13						
9	RRW POG Status											RRW POG Status ◇ 1/12			
10															
11	**NWC Briefings**														
12	RRW POG Plan						RRW POG Plan ◇ 7/27								
13	RRW POG Status											RRW POG Status ◇ 1/25			
14															
15	**RRW POG Meetings**														
16	Kickoff RRW POG			Kickoff RRW POG ◆ 5/11 ITT/CC											
17	2nd RRW POG				2nd RRW POG ◇ 6/9 SNL/NM										
18	3rd RRW POG						3rd RRW POG ◇ 8/3 SNL/NM?								
19	4th RRW POG								4th RRW POG ◇ 9/14 TBD						
20	5th RRW POG									5th RRW POG ◇ 11/2 TBD					
21	6th RRW POG										6th RRW POG ◇ 12/14 TBD				

RRW
FY05/09
ds

Page 1

This Page is Intentionally Left Blank

MINUTES OF THE RELIABLE REPLACEMENT WARHEAD
PROJECT OFFICERS GROUP KICKOFF MEETING (U)

(U) DISTRIBUTION LIST
(This Distribution List is UNCLASSIFIED)

b(6) Privacy Act 1974

MINUTES OF THE RELIABLE REPLACEMENT WARHEAD
PROJECT OFFICERS GROUP KICKOFF MEETING (U)

(U) DISTRIBUTION LIST (Continued)
(This Distribution List is UNCLASSIFIED)

b(6)

Privacy Act 1974

MINUTES OF THE RELIABLE REPLACEMENT WARHEAD
PROJECT OFFICERS GROUP KICKOFF MEETING (U)

(U) DISTRIBUTION LIST (Continued)
(This Distribution List is UNCLASSIFIED)

b(6) Privacy Act 1974

MINUTES OF THE RELIABLE REPLACEMENT WARHEAD
PROJECT OFFICERS GROUP KICKOFF MEETING (U)

(U) DISTRIBUTION LIST (Continued)
(This Distribution List is UNCLASSIFIED)

b(6) Privacy Act 1974

MINUTES OF THE RELIABLE REPLACEMENT WARHEAD
PROJECT OFFICERS GROUP KICKOFF MEETING (U)

(U) DISTRIBUTION LIST (Continued)
(This Distribution List is UNCLASSIFIED)

b(6)
Privacy Act 1974

This Page is Intentionally Left Blank

~~RESTRICTED DATA~~
This material contains Restricted Data as defined in the Atomic Energy Act of 1954. Unauthorized disclosure subject to administrative and criminal sanctions.

~~CNWDI~~
Critical Nuclear Weapon Design Information
DOD Directive 5210.2 Applies

RESTRICTED DATA
This material contains Restricted Data as defined in the Atomic Energy Act of 1954. Unauthorized disclosure subject to administrative and criminal sanctions.

CNWDI
Critical Nuclear Weapon Design Information
DOD Directive 5210.2 Applies

ITT Industries
Engineered for life

~~RESTRICTED DATA~~
~~This material contains Restricted Data as defined in the Atomic Energy Act of 1954. Unauthorized disclosure subject to administrative and criminal sanctions.~~

~~CNWDI~~
~~Critical Nuclear Weapon Design Information DOD Directive 5210.2 Applies~~

Advanced Engineering
& Sciences

5009 Centennial Boulevard (80919)
P.O. Box 39550
Colorado Springs, CO 80949-9550