D00014023

TRANSFERRED TO OTHER AGENCY
TRANSFER FOR DIRECT REPLY - DOE

M88A

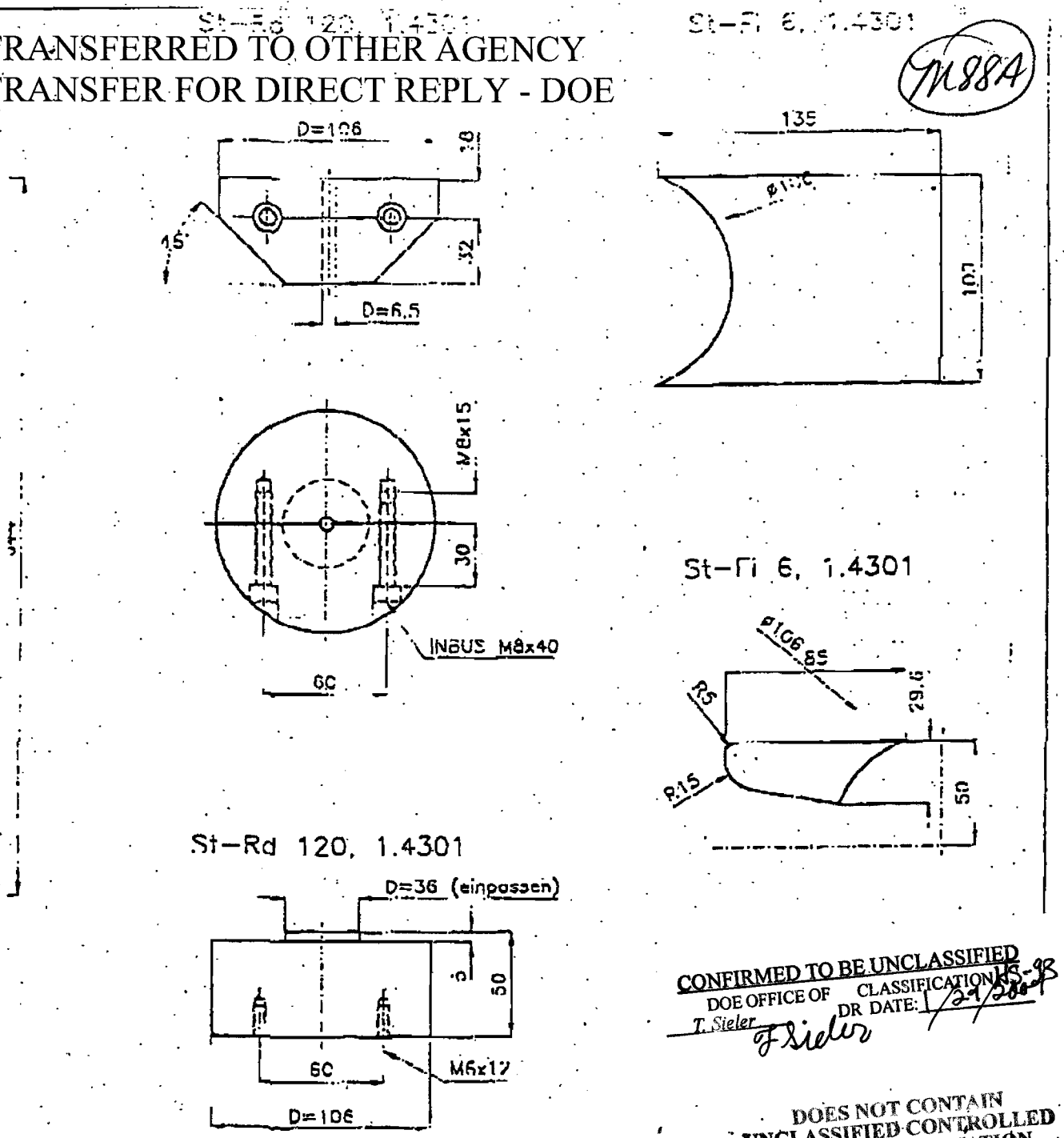

CONFIRMED TO BE UNCLASSIFIED
DOE OFFICE OF CLASSIFICATION
DR DATE: 1/29/2001
T. Sieler

DOES NOT CONTAIN
UNCLASSIFIED CONTROLLED
NUCLEAR INFORMATION

	Date	Name	Signature
Drawing by	04.01.1996	F.Meyer	
Checked by			
Released by			

IAEA Mechanical Workshop
Seibersdorf Laboratory / AUSTRIA

Scale 1:2.5

Shielding-Box

Drawing Identification or Number: S_BOX

Repl. for

Replacing

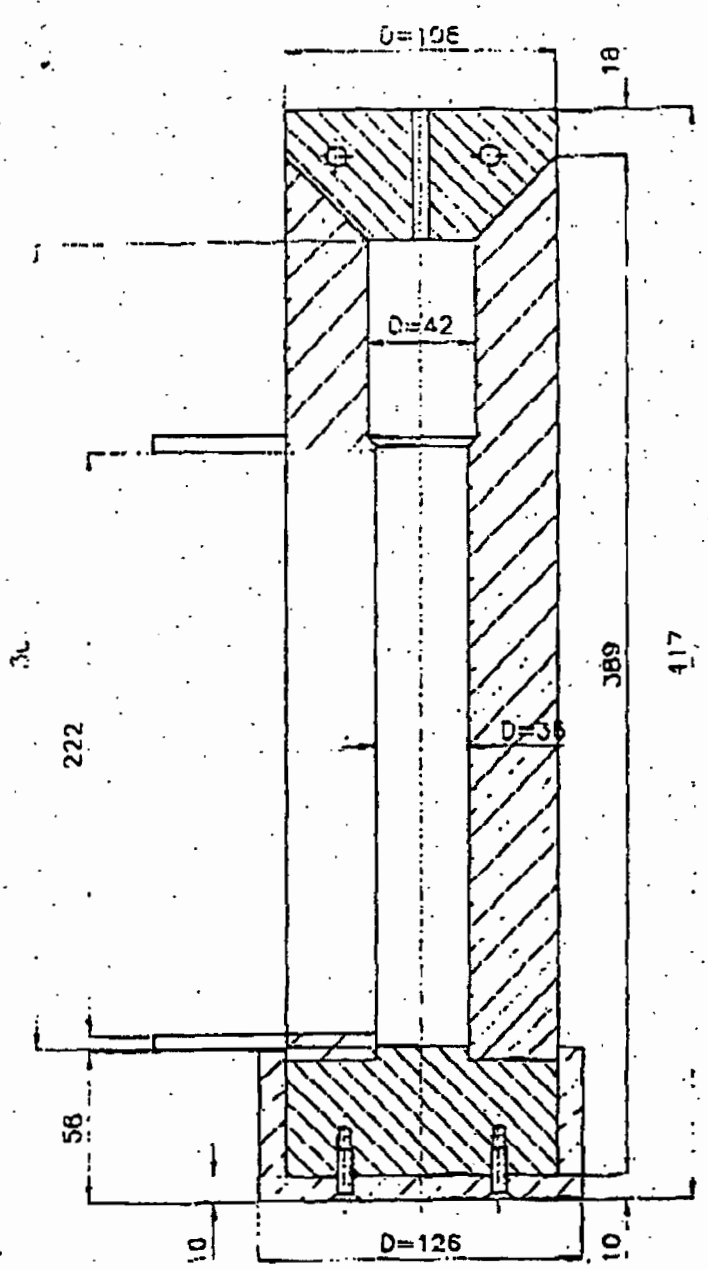
D=106
18
D=42
222
389
417
D=36
58
10
D=126
10

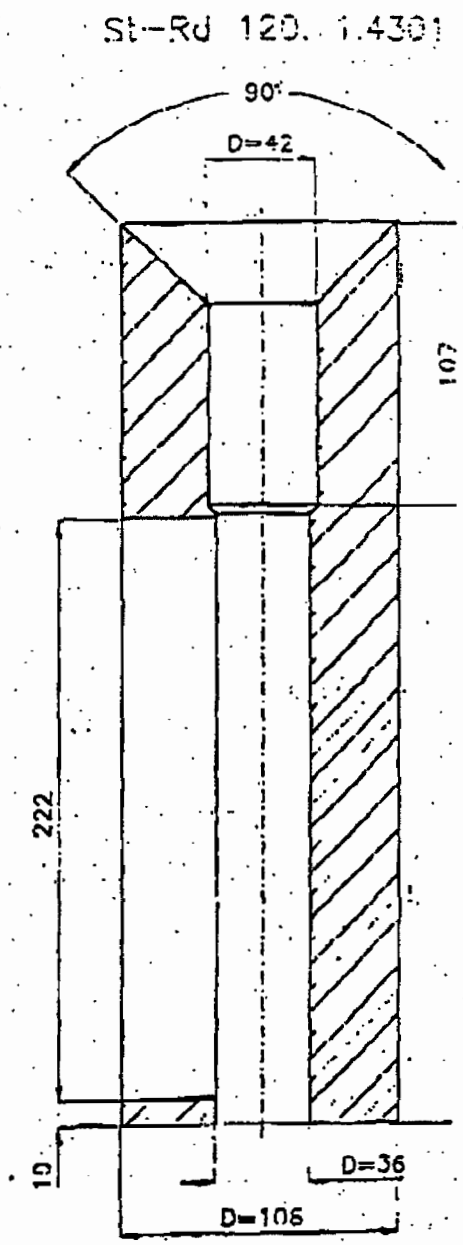
St-Rd 120. 1.4301
90°
D=42
107
222
10
D=36
D=106

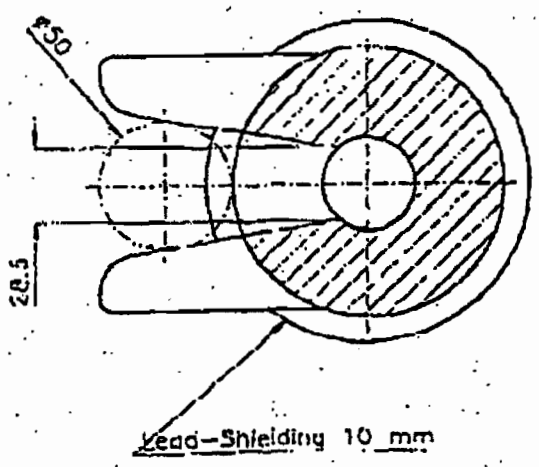
ø50
28.5
Lead-Shielding 10 mm

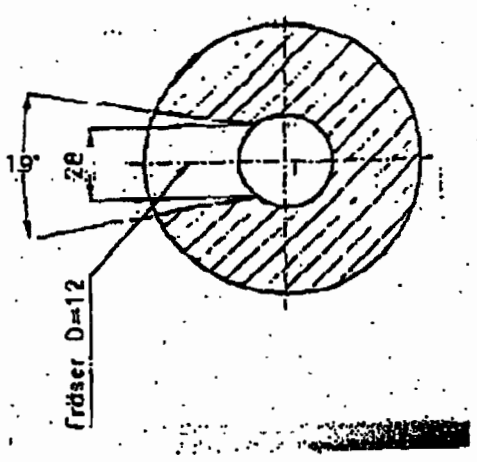
19
28
Fräser D=12