United States Nuclear Regulatory Commission

Protecting People and the Environment

NUREG-2157
Volume 1

Generic Environmental Impact Statement for Continued Storage of Spent Nuclear Fuel

Final Report

Office of Nuclear Material Safety and Safeguards

AVAILABILITY OF REFERENCE MATERIALS IN NRC PUBLICATIONS

NRC Reference Material

As of November 1999, you may electronically access NUREG-series publications and other NRC records at NRC's Public Electronic Reading Room at http://www.nrc.gov/reading-rm.html. Publicly released records include, to name a few, NUREG-series publications; *Federal Register* notices; applicant, licensee, and vendor documents and correspondence; NRC correspondence and internal memoranda; bulletins and information notices; inspection and investigative reports; licensee event reports; and Commission papers and their attachments.

NRC publications in the NUREG series, NRC regulations, and Title 10, "Energy," in the *Code of Federal Regulations* may also be purchased from one of these two sources.

1. The Superintendent of Documents
   U.S. Government Printing Office
   Mail Stop SSOP
   Washington, DC 20402–0001
   Internet: bookstore.gpo.gov
   Telephone: 202-512-1800
   Fax: 202-512-2250
2. The National Technical Information Service
   Springfield, VA 22161–0002
   www.ntis.gov
   1–800–553–6847 or, locally, 703–605–6000

A single copy of each NRC draft report for comment is available free, to the extent of supply, upon written request as follows:
Address: U.S. Nuclear Regulatory Commission
Office of Administration
Publications Branch
Washington, DC 20555-0001
E-mail: DISTRIBUTION.RESOURCE@NRC.GOV
Facsimile: 301–415–2289

Some publications in the NUREG series that are posted at NRC's Web site address http://www.nrc.gov/reading-rm/doc-collections/nuregs are updated periodically and may differ from the last printed version. Although references to material found on a Web site bear the date the material was accessed, the material available on the date cited may subsequently be removed from the site.

Non-NRC Reference Material

Documents available from public and special technical libraries include all open literature items, such as books, journal articles, transactions, *Federal Register* notices, Federal and State legislation, and congressional reports. Such documents as theses, dissertations, foreign reports and translations, and non-NRC conference proceedings may be purchased from their sponsoring organization.

Copies of industry codes and standards used in a substantive manner in the NRC regulatory process are maintained at—
The NRC Technical Library
Two White Flint North
11545 Rockville Pike
Rockville, MD 20852–2738

These standards are available in the library for reference use by the public. Codes and standards are usually copyrighted and may be purchased from the originating organization or, if they are American National Standards, from—
American National Standards Institute
11 West 42nd Street
New York, NY 10036–8002
www.ansi.org
212–642–4900

Legally binding regulatory requirements are stated only in laws; NRC regulations; licenses, including technical specifications; or orders, not in NUREG-series publications. The views expressed in contractor-prepared publications in this series are not necessarily those of the NRC.

The NUREG series comprises (1) technical and administrative reports and books prepared by the staff (NUREG–XXXX) or agency contractors (NUREG/CR–XXXX), (2) proceedings of conferences (NUREG/CP–XXXX), (3) reports resulting from international agreements (NUREG/IA–XXXX), (4) brochures (NUREG/BR–XXXX), and (5) compilations of legal decisions and orders of the Commission and Atomic and Safety Licensing Boards and of Directors' decisions under Section 2.206 of NRC's regulations (NUREG–0750).

DISCLAIMER: This report was prepared as an account of work sponsored by an agency of the U.S. Government. Neither the U.S. Government nor any agency thereof, nor any employee, makes any warranty, expressed or implied, or assumes any legal liability or responsibility for any third party's use, or the results of such use, of any information, apparatus, product, or process disclosed in this publication, or represents that its use by such third party would not infringe privately owned rights.

United States Nuclear Regulatory Commission

Protecting People and the Environment

NUREG-2157
Volume 1

Generic Environmental Impact Statement for Continued Storage of Spent Nuclear Fuel

Final Report

Manuscript Completed: August 2014
Date Published: September 2014

Waste Confidence Directorate
Office of Nuclear Material Safety and Safeguards
U.S. Nuclear Regulatory Commission
Washington, D.C. 20555-0001

COVER SHEET

Responsible Agency: U.S. Nuclear Regulatory Commission, Office of Nuclear Material Safety and Safeguards

Title: NUREG–2157, Generic Environmental Impact Statement for Continued Storage of Spent Nuclear Fuel – Final Report, Volumes 1 and 2

For additional copies or questions about this Generic Environmental Impact Statement, contact:

Sarah Lopas
NEPA Communications Project Manager

Phone: 1-800-368-5642, extension 287-0675

Email: Sarah.Lopas@nrc.gov

U.S. Nuclear Regulatory Commission
Office of Nuclear Material Safety and Safeguards
Waste Confidence Directorate
Mail Stop 3WFN 14-C64
11555 Rockville Pike
Rockville, Maryland 20852

Abstract

This *Generic Environmental Impact Statement for Continued Storage of Spent Nuclear Fuel* (GEIS) generically determines the environmental impacts of continued storage, including those impacts identified in the remand by the Court of Appeals in the *New York v. NRC* decision, and provides a regulatory basis for a revision to 10 CFR 51.23 that addresses the environmental impacts of continued storage for use in future NRC environmental reviews. In this context, "the environmental impacts of continued storage" means those impacts that could occur as a result of the storage of spent nuclear fuel at at-reactor and away-from-reactor sites after a reactor's licensed life for operation and until a permanent repository becomes available. The GEIS evaluates potential environmental impacts to a broad range of resources. Cumulative impacts are also analyzed.

Because the timing of repository availability is uncertain, the GEIS analyzes potential environmental impacts over three possible timeframes: a short-term timeframe, which includes 60 years of continued storage after the end of a reactor's licensed life for operation; an additional 100-year timeframe (60 years plus 100 years) to address the potential for delay in repository availability; and a third, indefinite timeframe to address the possibility that a repository never becomes available. All potential impacts in each resource area are analyzed for each continued storage timeframe.

The GEIS contains several appendices that discuss specific topics of particular interest, including the technical feasibility of continued storage and repository availability as well as the two technical issues involved in the remand of *New York v. NRC*—spent fuel pool leaks and spent fuel pool fires. Finally the GEIS contains NRC's responses to public comments on the draft GEIS and proposed Rule and in doing so provides additional technical background on, and explanation of, the GEIS's analyses and conclusions.

The GEIS also discusses the NRC's Federal action—the adoption of a revised Rule, 10 CFR 51.23, to codify (i.e., adopt into regulation) the analysis in the GEIS of the environmental impacts of continued storage of spent fuel—and the options the NRC could take under the no-action alternative.

Contents

Abstract iii
Figures xix
Tables xxi
Executive Summary xxiii
Abbreviations/Acronyms lxvii
Units of Measure lxxi
1.0 Introduction 1-1
1.1 History of Waste Confidence 1-1
1.2 Scope of the Generic Environmental Impact Statement 1-4
1.3 Purpose of the Generic Environmental Impact Statement 1-5
1.4 Proposed Federal Action 1-5
1.5 Purpose of and Need for the Proposed Action 1-6
1.6 Alternatives 1-6
1.6.1 No-Action Alternative 1-6
1.6.1.1 Site-Specific Review Option 1-7
1.6.1.2 GEIS-Only Option 1-8
1.6.1.3 Policy-Statement Option 1-8
1.6.2 Alternatives Considered but Eliminated 1-9
1.6.2.1 Cessation of Licensing or Cessation of Reactor Operation 1-9
1.6.2.2 Implementing Additional Regulatory Requirements 1-10
1.6.3 Comparison of Reasonable Alternatives 1-10
1.7 Public and Agency Involvement 1-11
1.7.1 Scoping Process 1-11
1.7.2 Public Comments Received on the Draft GEIS and Proposed Rule 1-12
1.7.3 Cooperating Agencies 1-12
1.8 Analytical Approach 1-12
1.8.1 Approach to Impact Assessment 1-12
1.8.2 Timeframes Evaluated 1-13
1.8.3 Analysis Assumptions 1-15
1.8.4 Other Environmental Analyses 1-18
1.8.5 Significance of Environmental Impacts 1-23

1.8.6 Issues Eliminated from Review in this GEIS 1-24
1.8.7 GEIS Contents....1-24
1.9 Other Applicable Federal Requirements 1-25
1.10 References 1-27
2.0 Generic Facility Descriptions and Activities 2-1
2.1 Generic Facility Descriptions....2-1
2.1.1 At-Reactor Continued Storage Site Descriptions 2-2
2.1.1.1 General Description of Single-Unit Nuclear Power Plant Site....2-2
2.1.1.2 General Description of Multiple-Unit Nuclear Power Plant Sites....2-5
2.1.1.3 Reactor and Fuel Technologies....2-6
2.1.2 Onsite Spent Fuel Storage and Handling 2-11
2.1.2.1 Spent Fuel Pools 2-11
2.1.2.2 At-Reactor Independent Spent Fuel Storage Installations....2-13
2.1.3 Away-from-Reactor ISFSIs....2-18
2.1.4 Dry Transfer System....2-20
2.2 Generic Activity Descriptions....2-24
2.2.1 Short-Term Storage Activities....2-24
2.2.1.1 Decommissioning Activities during Short-Term Storage....2-25
2.2.1.2 Activities in Spent Fuel Pools 2-27
2.2.1.3 Activities at At-Reactor ISFSIs....2-29
2.2.1.4 Activities at Away-from-Reactor ISFSIs....2-30
2.2.2 Long-Term Storage Activities 2-31
2.2.2.1 Construction and Operation of a DTS....2-31
2.2.2.2 Replacement of Storage and Handling Facilities....2-34
2.2.3 Indefinite Storage Activities 2-35
2.3 References....2-36
3.0 Affected Environment....3-1
3.1 Land Use....3-1
3.2 Socioeconomics 3-4
3.2.1 Employment and Income....3-5
3.2.2 Taxes....3-6
3.2.3 Demography 3-6
3.2.4 Housing 3-7
3.2.5 Public Services 3-7

3.2.6 Transportation 3-7
3.3 Environmental Justice 3-8
3.4 Climate and Air Quality....3-11
3.4.1 Climate 3-11
3.4.2 Greenhouse Gases 3-12
3.4.3 Criteria Pollutants 3-13
3.5 Geology and Soils 3-14
3.6 Surface-Water Quality and Use....3-16
3.7 Groundwater Quality and Use 3-17
3.8 Terrestrial Resources 3-19
3.8.1 Upland Vegetation and Habitats....3-20
3.8.2 Lowland and Wetland Vegetation and Habitats....3-21
3.8.3 Wildlife 3-21
3.9 Aquatic Ecology....3-22
3.9.1 Aquatic Habitats 3-23
3.9.1.1 Freshwater Systems 3-23
3.9.1.2 Estuarine Ecosystems 3-24
3.9.1.3 Marine Ecosystems 3-25
3.9.2 Aquatic Organisms 3-25
3.9.2.1 Fish 3-25
3.9.2.2 Aquatic Macroinvertebrates 3-26
3.9.2.3 Zooplankton 3-27
3.9.2.4 Single-Celled Algae 3-27
3.9.2.5 Other Aquatic Invertebrates and Vertebrates 3-27
3.9.2.6 Aquatic Macrophytes 3-27
3.10 Special Status Species and Habitats 3-28
3.11 Historic and Cultural Resources....3-30
3.12 Noise 3-33
3.13 Aesthetics....3-34
3.14 Waste Management 3-34
3.14.1 Low-Level Radioactive Waste 3-34
3.14.2 Mixed Waste....3-36
3.14.3 Hazardous Waste 3-36
3.14.4 Nonradioactive, Nonhazardous Waste 3-37
3.14.5 Pollution Prevention and Waste Minimization 3-37

3.15 Transportation 3-38
3.16 Public and Occupational Health 3-38
3.16.1 Radiological Exposure 3-39
3.16.1.1 Regulatory Requirements for Occupational Exposure 3-39
3.16.1.2 Regulatory Requirements for Public Exposure 3-40
3.16.2 Radiological Exposure from Naturally Occurring and Artificial Sources 3-40
3.16.3 Occupational Hazards 3-42
3.17 References 3-42
4.0 Environmental Impacts of At-Reactor Continued Storage of Spent Fuel 4-1
4.1 Land Use 4-3
4.1.1 Short-Term Storage 4-4
4.1.2 Long-Term Storage 4-5
4.1.3 Indefinite Storage 4-6
4.2 Socioeconomics 4-6
4.2.1 Short-Term Storage 4-6
4.2.2 Long-Term Storage 4-7
4.2.3 Indefinite Storage 4-9
4.3 Environmental Justice 4-9
4.3.1 Short-Term Storage 4-11
4.3.2 Long-Term Storage 4-12
4.3.3 Indefinite Storage 4-14
4.4 Air Quality 4-14
4.4.1 Short-Term Storage 4-14
4.4.2 Long-Term Storage 4-16
4.4.3 Indefinite Storage 4-17
4.5 Climate Change 4-18
4.5.1 Short-Term Storage 4-18
4.5.2 Long-Term Storage 4-19
4.5.3 Indefinite Storage 4-20
4.6 Geology and Soils 4-20
4.6.1 Short-Term Storage 4-20
4.6.2 Long-Term Storage 4-21
4.6.3 Indefinite Storage 4-21

4.7 Surface-Water Quality and Use 4-22
4.7.1 Short-Term Storage 4-22
4.7.1.1 Spent Fuel Pools 4-22
4.7.1.2 ISFSIs 4-23
4.7.1.3 Conclusion 4-23
4.7.2 Long-Term Storage 4-23
4.7.3 Indefinite Storage 4-24
4.8 Groundwater Quality and Use 4-25
4.8.1 Short-Term Storage 4-25
4.8.1.1 Spent Fuel Pools 4-25
4.8.1.2 ISFSIs 4-27
4.8.1.3 Conclusion 4-27
4.8.2 Long-Term Storage 4-27
4.8.3 Indefinite Storage 4-28
4.9 Terrestrial Resources 4-29
4.9.1 Short-Term Storage 4-29
4.9.1.1 Spent Fuel Pools 4-29
4.9.1.2 ISFSIs 4-32
4.9.1.3 Conclusion 4-33
4.9.2 Long-Term Storage 4-33
4.9.3 Indefinite Storage 4-35
4.10 Aquatic Ecology 4-36
4.10.1 Short-Term Storage 4-36
4.10.1.1 Spent Fuel Pools 4-36
4.10.1.2 ISFSIs 4-42
4.10.1.3 Conclusion 4-43
4.10.2 Long-Term Storage 4-43
4.10.3 Indefinite Storage 4-44
4.11 Special Status Species and Habitat 4-44
4.11.1 Short-Term Storage 4-44
4.11.1.1 Spent Fuel Pools 4-44
4.11.1.2 ISFSIs 4-46
4.11.1.3 Conclusion 4-47
4.11.2 Long-Term Storage 4-48
4.11.3 Indefinite Storage 4-49
4.12 Historic and Cultural Resources 4-49

4.12.1 Short-Term Storage 4-50
4.12.2 Long-Term Storage 4-51
4.12.3 Indefinite Storage 4-54
4.13 Noise 4-55
4.13.1 Short-Term Storage 4-55
4.13.2 Long-Term Storage 4-56
4.13.3 Indefinite Storage 4-57
4.14 Aesthetics 4-57
4.14.1 Short-Term Storage 4-57
4.14.2 Long-Term Storage 4-58
4.14.3 Indefinite Storage 4-59
4.15 Waste Management 4-59
4.15.1 Short-Term Storage 4-59
4.15.1.1 Low-Level Radioactive Waste 4-59
4.15.1.2 Mixed Waste 4-60
4.15.1.3 Nonradioactive Waste 4-61
4.15.2 Long-Term Storage 4-61
4.15.2.1 Low-Level Radioactive Waste 4-62
4.15.2.2 Mixed Waste 4-63
4.15.2.3 Nonradioactive Waste 4-64
4.15.3 Indefinite Storage 4-65
4.15.3.1 Low-Level Radioactive Waste 4-65
4.15.3.2 Mixed Waste 4-65
4.15.3.3 Nonradioactive Waste 4-65
4.16 Transportation 4-66
4.16.1 Short-Term Storage 4-66
4.16.2 Long-Term Storage 4-67
4.16.3 Indefinite Storage 4-69
4.17 Public and Occupational Health 4-69
4.17.1 Short-Term Storage 4-69
4.17.2 Long-Term Storage 4-71
4.17.3 Indefinite Storage 4-71
4.18 Environmental Impacts of Postulated Accidents 4-72
4.18.1 Design Basis Events 4-74
4.18.1.1 Design Basis Events in Spent Fuel Pools 4-74

4.18.1.2 Design Basis Events in Dry Cask Storage Systems 4-81
4.18.1.3 Conclusion 4-84
4.18.2 Severe Accidents 4-84
4.18.2.1 Severe Accidents in Spent Fuel Pools 4-85
4.18.2.2 Severe Accidents in Dry Cask Storage Systems and DTSs 4-88
4.18.2.3 Conclusion 4-90
4.19 Potential Acts of Sabotage or Terrorism 4-91
4.19.1 Attacks on Spent Fuel Pools 4-92
4.19.2 Attacks on ISFSIs and DTS 4-94
4.19.3 Conclusion 4-97
4.20 Summary 4-97
4.21 References 4-99
5.0 Environmental Impacts of Away-From-Reactor Storage 5-1
5.1 Land Use 5-5
5.1.1 Short-Term Storage 5-5
5.1.2 Long-Term Storage 5-6
5.1.3 Indefinite Storage 5-8
5.2 Socioeconomics 5-8
5.2.1 Short-Term Storage 5-8
5.2.2 Long-Term Storage 5-9
5.2.3 Indefinite Storage 5-10
5.3 Environmental Justice 5-10
5.3.1 Short-Term Storage 5-11
5.3.2 Long-Term Storage 5-14
5.3.3 Indefinite Storage 5-15
5.4 Air Quality 5-15
5.4.1 Short-Term Storage 5-15
5.4.2 Long-Term Storage 5-18
5.4.3 Indefinite Storage 5-18
5.5 Climate Change 5-19
5.5.1 Short-Term Storage 5-19
5.5.2 Long-Term Storage 5-21
5.5.3 Indefinite Storage 5-21

5.6 Geology and Soils 5-21
5.6.1 Short-Term Storage 5-21
5.6.2 Long-Term Storage 5-22
5.6.3 Indefinite Storage 5-23
5.7 Surface-Water Quality and Use 5-23
5.7.1 Short-Term Storage 5-23
5.7.2 Long-Term Storage 5-24
5.7.3 Indefinite Storage 5-25
5.8 Groundwater Quality and Use 5-25
5.8.1 Short-Term Storage 5-25
5.8.2 Long-Term Storage 5-26
5.8.3 Indefinite Storage 5-26
5.9 Terrestrial Resources 5-27
5.9.1 Short-Term Storage 5-27
5.9.2 Long-Term Storage 5-28
5.9.3 Indefinite Storage 5-29
5.10 Aquatic Ecology 5-29
5.10.1 Short-Term Storage 5-29
5.10.2 Long-Term Storage 5-30
5.10.3 Indefinite Storage 5-31
5.11 Special Status Species and Habitats 5-31
5.11.1 Short-Term Storage 5-31
5.11.2 Long-Term Storage 5-33
5.11.3 Indefinite Storage 5-34
5.12 Historic and Cultural Resources 5-35
5.12.1 Short-Term Storage 5-35
5.12.2 Long-Term Storage 5-37
5.12.3 Indefinite Storage 5-40
5.13 Noise 5-41
5.13.1 Short-Term Storage 5-41
5.13.2 Long-Term Storage 5-42
5.13.3 Indefinite Storage 5-43

5.14 Aesthetics 5-43
5.14.1 Short-Term Storage 5-43
5.14.2 Long-Term Storage 5-44
5.14.3 Indefinite Storage 5-45
5.15 Waste Management 5-45
5.15.1 Short-Term Storage 5-45
5.15.2 Long-Term Storage 5-46
5.15.3 Indefinite Storage 5-48
5.16 Transportation 5-49
5.16.1 Short-Term Storage 5-49
5.16.2 Long-Term Storage 5-52
5.16.3 Indefinite Storage 5-54
5.17 Public and Occupational Health 5-54
5.17.1 Short-Term Storage 5-54
5.17.2 Long-Term Storage 5-55
5.17.3 Indefinite Storage 5-56
5.18 Environmental Impacts of Postulated Accidents 5-56
5.19 Potential Acts of Sabotage or Terrorism 5-58
5.20 Summary 5-58
5.21 References 5-60
6.0 Cumulative Impacts 6-1
6.1 Methodology for Assessing Cumulative Impacts 6-1
6.2 Spatial and Temporal Bounds of the Cumulative Impacts Assessment 6-3
6.3 Past, Present, and Reasonably Foreseeable Actions 6-3
6.3.1 General Trends and Activities 6-4
6.3.2 Other NRC-Regulated or Spent Fuel-Related Activities during Continued Storage 6-8
6.3.2.1 Final Reactor Shutdown Activities Prior to Decommissioning 6-8
6.3.2.2 Decommissioning of the Reactor Power Block (including the spent fuel pool), DTS, and ISFSI 6-9
6.3.2.3 Activities to Prepare the Spent Fuel for Transportation to a Repository for Final Disposal 6-9
6.3.2.4 Transportation of Spent Fuel from an At-Reactor or Away-From-Reactor Storage Facility to a Repository for Disposal 6-10

6.4 Resource-Specific Analyses 6-10
6.4.1 Land Use 6-10
6.4.1.1 Potential Cumulative Impacts from General Trends and Activities 6-10
6.4.1.2 Potential Cumulative Impacts from Other NRC-Regulated or Spent Fuel-Related Activities 6-11
6.4.1.3 Conclusion 6-12
6.4.2 Socioeconomics 6-12
6.4.2.1 Potential Cumulative Impacts from General Trends and Activities 6-13
6.4.2.2 Potential Cumulative Impacts from Other NRC-Regulated or Spent Fuel-Related Activities 6-13
6.4.2.3 Conclusion 6-15
6.4.3 Environmental Justice 6-15
6.4.3.1 Potential Cumulative Impacts from General Trends and Activities 6-16
6.4.3.2 Potential Cumulative Impacts from Other NRC-Regulated or Spent Fuel-Related Activities 6-17
6.4.3.3 Conclusion 6-18
6.4.4 Air Quality 6-18
6.4.4.1 Potential Cumulative Impacts from General Trends and Activities 6-19
6.4.4.2 Potential Cumulative Impacts from Other NRC-Regulated or Spent Fuel-Related Activities 6-19
6.4.4.3 Conclusion 6-20
6.4.5 Climate Change 6-21
6.4.5.1 Potential Cumulative Impacts from General Trends and Activities and from Other NRC-Regulated or Spent Fuel-Related Activities 6-21
6.4.5.2 Conclusion 6-23
6.4.6 Geology and Soils 6-23
6.4.6.1 Potential Cumulative Impacts from General Trends and Activities 6-23
6.4.6.2 Potential Cumulative Impacts from Other NRC-Regulated or Spent Fuel-Related Activities 6-24
6.4.6.3 Conclusion 6-25
6.4.7 Surface-Water Quality and Use 6-25
6.4.7.1 Potential Cumulative Impacts from General Trends and Activities 6-26

6.4.7.2 Potential Cumulative Impacts from Other NRC-Regulated or Spent Fuel-Related Activities....6-26
6.4.7.3 Conclusion....6-27
6.4.8 Groundwater Quality and Use....6-28
6.4.8.1 Potential Cumulative Impacts from General Trends and Activities....6-28
6.4.8.2 Potential Cumulative Impacts from Other NRC-Regulated or Spent Fuel-Related Activities....6-29
6.4.8.3 Conclusion....6-30
6.4.9 Terrestrial Resources....6-30
6.4.9.1 Potential Cumulative Impacts from General Trends and Activities....6-31
6.4.9.2 Potential Cumulative Impacts from Other NRC-Regulated or Spent Fuel-Related Activities....6-32
6.4.9.3 Conclusion....6-33
6.4.10 Aquatic Resources....6-34
6.4.10.1 Potential Cumulative Impacts from General Trends and Activities....6-34
6.4.10.2 Potential Cumulative Impacts from Other NRC-Regulated or Spent Fuel-Related Activities....6-35
6.4.10.3 Conclusion....6-36
6.4.11 Historic and Cultural Resources....6-37
6.4.11.1 Potential Cumulative Impacts from General Trends and Activities....6-38
6.4.11.2 Potential Cumulative Impacts from Other NRC-Regulated or Spent Fuel-Related Activities....6-38
6.4.11.3 Conclusion....6-39
6.4.12 Noise....6-40
6.4.12.1 Potential Cumulative Impacts from General Trends and Activities....6-41
6.4.12.2 Potential Cumulative Impacts from Other NRC-Regulated or Spent Fuel-Related Activities....6-41
6.4.12.3 Conclusion....6-42
6.4.13 Aesthetics....6-43
6.4.13.1 Potential Cumulative Impacts from General Trends and Activities....6-43
6.4.13.2 Potential Cumulative Impacts from Other NRC-Regulated or Spent Fuel-Related Activities....6-44
6.4.13.3 Conclusions....6-45

6.4.14 Waste Management 6-45
6.4.14.1 Potential Cumulative Impacts from General Trends and Activities....6-46
6.4.14.2 Potential Cumulative Impacts from Other NRC-Regulated or Spent Fuel-Related Activities....6-47
6.4.14.3 Conclusion 6-50
6.4.15 Transportation 6-50
6.4.15.1 Potential Cumulative Impacts from General Trends and Activities....6-51
6.4.15.2 Potential Cumulative Impacts from Other NRC-Regulated or Spent Fuel-Related Activities....6-51
6.4.15.3 Conclusion 6-53
6.4.16 Public and Occupational Health 6-53
6.4.16.1 Potential Cumulative Impacts from General Trends and Activities....6-54
6.4.16.2 Potential Cumulative Impacts from Other NRC-Regulated or Spent Fuel-Related Activities....6-55
6.4.16.3 Conclusion 6-55
6.4.17 Environmental Impacts of Postulated Accidents 6-55
6.4.17.1 Potential Cumulative Impacts from General Trends and Activities....6-56
6.4.17.2 Potential Cumulative Impacts from Other NRC-Regulated or Spent Fuel-Related Activities....6-57
6.4.17.3 Conclusion 6-57
6.5 Summary 6-58
6.6 References 6-59
7.0 Cost-Benefit Analysis 7-1
7.1 Assumptions 7-2
7.1.1 New Reactor Applications 7-4
7.1.2 Reactor License Renewal 7-6
7.1.3 ISFSI Licensing 7-7
7.2 Estimated Costs and Benefits of the Proposed Action 7-8
7.3 Estimated Costs and Benefits of the Site-Specific Review Option 7-9
7.4 Estimated Costs and Benefits of the GEIS-Only Option 7-10
7.5 Estimated Costs and Benefits of the Policy-Statement Option 7-12
7.6 Comparison of Alternatives 7-14
7.7 Final Analysis and Final Recommendation 7-17

7.8 References 7-17
8.0 Summary of Environmental Impacts of Continued Storage 8-1
8.1 Summarized Environmental Impacts of Continued Storage 8-2
8.2 Unavoidable Adverse Environmental Impacts of Continued Storage 8-4
8.3 Irreversible and Irretrievable Commitments of Resources Associated with Continued Storage 8-7
8.4 Relationship Between Short-Term Uses of the Environment for Continued Storage and the Maintenance and Enhancement of Long-Term Productivity 8-8
8.5 References 8-9
9.0 List of Preparers 9-1
10.0 Index 10-1
11.0 Glossary 11-1
Appendix A – Scoping Comments A-1
Appendix B – Technical Feasibility of Continued Storage and Repository Availability .. B-1
Appendix C – Outreach and Correspondence C-1
Appendix D – Draft GEIS and Proposed Rule Comment Summaries and Responses D-1
Appendix E – Analysis of Spent Fuel Pool Leaks E-1
Appendix F – Spent Fuel Pool Fires F-1
Appendix G – Spent Fuel Storage Facilities G-1
Appendix H – Estimated Costs of Alternatives H-1
Appendix I – High-Burnup Fuel I-1

Figures

ES-1 Three Storage Timeframes Addressed in this GEIS xxx
1-1 Continued Storage Timeframes 1-14
1-2 NEPA Analyses for NRC Activities 1-19
2-1 Dry Storage of Spent Fuel 2-14
2-2 Licensed/Operating ISFSIs by State 2-16
2-3 Conceptual Sketches of a Dry Transfer System 2-22
2-4 Continued Storage Timeline 2-25
3-1 Map of NRC Regions Showing Locations of Operating Reactors 3-2

Tables

ES-1 Affected Resource Areas for At-Reactor Spent Fuel Storage xxxiv
ES-2 Affected Resource Areas for Away-From-Reactor Spent Fuel Storage xxxv
ES-3 Summary of Environmental Impacts of Continued At-Reactor Storage..... xlvii
ES-4 Summary of Environmental Impacts of Away-From-Reactor Spent Fuel Storage..... lix
ES-5 Summary of Cumulative Effects for Continued Storage of Spent Fuel..... lx
1-1 List of NEPA Documents Used in Preparation of this GEIS 1-20
2-1 U.S. Pressurized Water Reactors with Shared Spent Fuel Pools 2-6
2-2 Stainless-Steel-Clad Fuel at Decommissioning Plants..... 2-7
3-1 Land Area Characteristics of Operating Nuclear Power Plants with Site-Specific ISFSI Licenses..... 3-4
3-2 Occupational Dose Limits for Adults Established by 10 CFR Part 20 3-40
3-3 Average Annual Effective Dose Equivalent of Ionizing Radiation to a Member of the U.S. Population for 2006..... 3-41
4-1 Reference Plant Withdrawal Rates and Heat Loads 4-30
4-2 Summary of Environmental Impacts of Continued At-Reactor Storage..... 4-98
5-1 Summary of Environmental Impacts of Continued Away-from-Reactor Storage..... 5-59
6-1 General Trends and Human Activities Occurring at or near Storage Facilities 6-5
6-2 Comparison of Annual Carbon Dioxide Emission Rates 6-22
6-3 Summary of Incremental Impacts from Continued Storage on Waste Management..... 6-46
6-4 Summary of the Cumulative Impacts from Continued Storage When Added to Other Federal and Non-Federal Activities 6-58
7-1 Estimated Costs of the Proposed Action 7-9
7-2 Constant and Discounted Estimated Costs of the Site-Specific Review Option..... 7-9
7-3 Constant and Discounted Estimated Costs of the GEIS-Only Option 7-11
7-4 Constant and Discounted Estimated Costs of the Policy-Statement Option 7-13
7-5 Summary of Constant and Discounted Estimated Costs for the Proposed Action and NRC's Potential Options in the Case of No Action (in millions of 2014 dollars) 7-15
7-6 Summary of Unquantified Costs and Benefits of the Proposed Action and NRC's Potential Options in Case of No Action..... 7-16
8-1 Summary of Environmental Impacts of Continued At-Reactor Storage..... 8-2
8-2 Summary of Environmental Impacts of Continued Storage at an Away-from-Reactor Independent Spent Fuel Storage Installation..... 8-3
8-3 Summary of the Cumulative Impacts from Continued Storage When Added to Other Federal and Non-Federal Activities 8-4
9-1 List of Preparers—NRC 9-2
9-2 List of Preparers—CNWRA 9-5
9-3 List of Preparers—PNNL 9-6

Executive Summary

This summary describes the contents of the U.S. Nuclear Regulatory Commission's (NRC's) Generic Environmental Impact Statement for Continued Storage of Spent Nuclear Fuel (GEIS). It briefly discusses the proposed action (a rulemaking), alternatives to the proposed action, and the NRC's recommendation to the Commission. It also describes the NRC's determinations regarding the environmental impacts of at-reactor and away-from-reactor continued storage of spent nuclear fuel (spent fuel) over short-term, long-term, and indefinite timeframes, including the NRC's analysis of spent fuel pool leaks and fires.

ES.1 What is Waste Confidence?

Historically, Waste Confidence has been the NRC's generic determination regarding the technical feasibility and environmental impacts of safely storing spent fuel beyond the licensed life for operations of a nuclear power plant. The Commission incorporated the generic determination in its regulations at Title 10 of the *Code of Federal Regulations* (CFR) 51.23, which satisfied the NRC's obligations under the National Environmental Policy Act of 1969, as amended (NEPA), with respect to the continued storage of spent fuel for commercial reactor licenses, license renewals, and spent fuel storage facility licenses and license renewals.

Continued Storage applies to the storage of spent fuel *after* the end of the licensed life for operations of a nuclear reactor and *before* final disposal in a permanent repository.

ES.2 Why Did the NRC Change the Name of the Generic Environmental Impact Statement and Rule?

During the public comment period on the draft GEIS and proposed Rule, the NRC asked four specific questions, one of which was, "Should the title of the rule be changed in light of a GEIS being issued instead of a separate Waste Confidence Decision?" The NRC received an overwhelming number of comments in favor of changing the name of the Rule; therefore, the title of the *Federal Register* Notice for the rulemaking has been changed to "Continued Storage of Spent Nuclear Fuel." Further, the title of the GEIS has been changed to, "Generic Environmental Impact Statement for Continued Storage of Spent Nuclear Fuel" to be consistent with the title of the rulemaking. Appendix D contains summaries of the public input received on the four specific questions on the proposed Rule and other comments received on the draft GEIS and proposed Rule as well as the NRC's responses to those comments.

ES.3 Why Has the NRC Developed a Generic Environmental Impact Statement?

Since the Waste Confidence Rule was originally developed in 1984, the NRC has periodically updated the Rule, with the last update completed in 2010. A number of parties challenged the 2010 Waste Confidence Rule in court, and in June 2012, the Court of Appeals for the District of Columbia Circuit ruled that the 2010 Waste Confidence rulemaking did not satisfy the NRC's NEPA obligations. The Court of Appeals identified deficiencies in the 2010 Waste Confidence rule related to the NRC's environmental analysis of spent fuel pool fires and leaks, and the environmental impacts should a repository not become available.

In response to the Court of Appeals' ruling, the Commission decided that the NRC would not issue any final licenses that relied upon the Waste Confidence Rule until the NRC addressed the deficiencies identified by the Court of Appeals (Commission Order CLI–12–16). The Commission separately directed the staff to develop an updated Waste Confidence decision and Rule supported by an environmental impact statement (SRM-COMSECY-12-0016). The staff has prepared this GEIS to satisfy its NEPA obligations regarding the environmental impacts of continued storage of spent fuel in an efficient manner. The GEIS provides a regulatory basis for the revision of the Rule. Chapter 1 of the GEIS provides a more detailed discussion of the history of the Waste Confidence rulemaking.

To comply with **The National Environmental Policy Act of 1969 (NEPA)** Federal agencies:

- assess the environmental impacts of major Federal actions,
- consider the environmental impacts in making decisions, and
- disclose the environmental impacts to the public.

ES.4 What is the Proposed Action Being Addressed in this GEIS?

The proposed Federal action is the adoption of a revised rule—10 CFR 51.23—that codifies the analysis in the GEIS of the environmental impacts of continued storage of spent fuel.

Why is the NRC evaluating continued storage on a generic basis?

The NRC considers the continued storage of spent fuel an activity that is similar for all commercial nuclear power plants and storage facilities. Therefore, a generic analysis is an appropriate, effective, and efficient method of evaluating the environmental impacts of continued storage. Other examples of NRC generic environmental evaluations include the License Renewal GEIS (NUREG–1437), the Decommissioning GEIS (NUREG–0586), and the In-Situ Leach Uranium Milling Facilities GEIS (NUREG–1910).

ES.5 What is the Purpose and Need for the Proposed Action?

The need for the proposed action is to provide processes for use in NRC licensing to address the environmental impacts of continued storage. Historically, the NRC and license applicants have relied on 10 CFR 51.23 to conclusively address the environmental impacts of continued storage in environmental reports, environmental impact statements (EISs), environmental assessments (EAs), and hearings. The purpose of the proposed action is to preserve the efficiency of the NRC's licensing processes with respect to the environmental impacts of continued storage.

ES.6 Could the NRC Pursue Options Other Than This Rulemaking?

Yes. As discussed in Section 1.6 of the GEIS, the NRC considered several different approaches for evaluating the environmental impacts of continued storage. The NRC looked at the three options that it could have pursued if it chose not to adopt a revised 10 CFR 51.23.

1. *The Site-Specific Review Option.* The NRC would take no action to generically address the environmental impacts of continued storage and, instead, would address the environmental impacts of continued storage in individual, site-specific licensing reviews.
2. *The GEIS-Only Option*. The NRC would rely on the GEIS to analyze the environmental impacts of continued storage, which would then support site-specific licensing reviews. There would be no Rule, so site-specific EISs or EAs would incorporate the GEIS by reference or adopt the conclusions in the GEIS.
3. *The Policy-Statement Option*. The Commission would issue a policy statement that expresses the Commission's intent to either adopt or incorporate the environmental impacts in the GEIS into site-specific NEPA actions or to prepare a site-specific evaluation for each NRC licensing action.

The NRC determined that the environmental impacts of these three options, in the case of no action, are essentially the same because they are merely different administrative approaches to addressing the environmental impacts of continued storage. Further, in both the proposed action and all of the NRC's options in the case of no action, the NRC would analyze the environmental impacts of continued storage. The NRC's conclusion is to adopt a revised 10 CFR 51.23 because of the efficiencies that would be gained in reactor and spent fuel storage facility licensing reviews. Adopting a revised Rule minimizes expenditures on site-specific reviews, limits the potential for lengthy project delays, and has the same environmental impacts as the NRC's options in case of no action.

During the scoping period and draft GEIS and proposed Rule comment period, the NRC received many suggested alternatives to the rulemaking, including calls for halting NRC licensing activities and shutting down operating reactors or imposing new requirements on nuclear power plants, such as storing spent fuel in special hardened onsite storage, reducing spent fuel pool density, and accelerating the transfer of spent fuel from pools to dry casks. The NRC determined that halting NRC licensing and closing nuclear reactors would not meet the purpose and need of the proposed action. The NRC also determined that additional requirements on spent fuel storage would not meet the purpose and need. Further, the GEIS is a NEPA review and does not authorize the initial or continued operation of any nuclear power plant, nor does it authorize storage of spent fuel; therefore, this GEIS would not be the appropriate activity in which to mandate new spent fuel storage requirements.

This rulemaking does not authorize the initial or continued operation of any nuclear power plant, nor does it authorize storage of spent fuel. It does not permit a nuclear power plant or any other facility to operate or store spent fuel. Every nuclear power plant or specifically licensed spent fuel storage facility must undergo an environmental review as part of its site-specific licensing process.

ES.7 What is Covered in the GEIS?

The GEIS analyzes the environmental impacts of continued storage of spent fuel. The NRC has looked at the direct, indirect, and cumulative effects of continued storage for three timeframes—short-term, long-term, and indefinite. These timeframes are defined below and are discussed in more detail in Section 1.8.2 of the GEIS. The analyses contained in this GEIS provide a regulatory basis for the proposed revisions to 10 CFR 51.23. Appendix B addresses the technical feasibility of repository availability and continued safe storage of spent fuel while Appendices E and F address the consequences of spent fuel pool leaks and fires, respectively.

ES.8 What is Not Covered in the GEIS?

The NRC is evaluating the continued storage of commercial spent fuel in this GEIS. Thus, certain topics are not addressed because they are not within the scope of this review. These topics include:

- noncommercial spent fuel (e.g., defense waste),
- commercial high-level waste generated from reprocessing,
- greater-than-class-C waste,
- foreign spent fuel stored in the United States,
- nonpower reactor spent fuel (e.g., test and research reactors, including foreign generated fuel stored in the United States),

- need for nuclear power, and
- reprocessing of commercial spent fuel.

ES.9 Did the NRC Involve the Public or Governmental Organizations?

The NRC announced that it was planning to develop an EIS and requested comments on the proposed scope of the GEIS in a *Federal Register* Notice that was published on October 25, 2012 (77 FR 65137). Publication of this notice began a 70-day public comment period for scoping. The NRC also issued press releases, sent scoping letters to Tribal governments and State liaisons, and sent e-mails to approximately 1,050 stakeholders who had previously expressed interest in matters related to high-level waste. The NRC conducted four public scoping meetings that were all accessible via Internet and telephone, so people from all over the country could participate and give their comments on the scope of the Waste Confidence GEIS. In November 2012, the NRC met with representatives of the U.S. Environmental Protection Agency (EPA) to discuss the Waste Confidence rulemaking. The NRC also held a government-to-government meeting with the Prairie Island Indian Community in June 2013. There are no formal cooperating agencies identified in this environmental review.

> At the end of the 70-day scoping period, the NRC summarized what it heard and responded to public comments in its *Scoping Summary Report*, which can be accessed at http://pbadupws.nrc.gov/docs/ML1306/ML13060A128.pdf.
>
> A separate document at http://pbadupws.nrc.gov/docs/ML1306/ML13060A130.pdf lists the scoping comments the NRC received, organized by category.
>
> At the end of the draft GEIS and proposed Rule comment period, the NRC summarized the public comments and provided responses in Appendix D of this final GEIS.
>
> A separate document at http://pbadupws.nrc.gov/docs/ML1415/ML14154A175.pdf lists the comments the NRC received on the draft GEIS and proposed Rule.

On September 13, 2013, the EPA published a notice of availability in the *Federal Register* (78 FR 56695), starting the 75-day comment period on the draft GEIS. In response to the October 2013 government shutdown, which caused the agency to reschedule several public meetings, the NRC extended the comment period to December 20, 2013 (78 FR 66858). The NRC also issued press releases, sent letters to Tribal governments and State liaison officers, produced a YouTube video, held multiple teleconferences, and sent e-mails to approximately 3,000 stakeholders who had expressed interest in this project. During the comment period the NRC held 13 public meetings throughout the United States. There were approximately 1,400 total participants at those meetings. Overall, the NRC received approximately

33,100 pieces of correspondence (e.g., e-mails, letters, postcards, etc.) from the public and recorded over 1,600 pages of transcripts.

GEIS Section 1.7 and Appendices A, C, and D discuss public and agency involvement in this environmental review and rulemaking. The Scoping Summary report provides information about the NRC's scoping activities and what the NRC heard during the scoping process. Appendix D provides the NRC's responses to comments received on the draft GEIS and proposed Rule as well as Agencywide Documents Access and Management System (ADAMS) accession numbers for public meeting summaries and transcripts.

The ADAMS electronic public reading room is available at http://www.nrc.gov/reading-rm/adams.html. If you encounter issues accessing ADAMS, call the NRC at 1-800-397-4209 or 301-415-4737, or send an e-mail to pdr.resource@nrc.gov.

ES.10 What Type of Comments Did the NRC Receive on the Draft GEIS?

The NRC transcribed approximately 1,600 pages of comments from nearly 500 meeting participants during the 13 public meetings and received approximately 33,100 written submittals during the comment period. The most common topics were general opposition to nuclear power, feasibility of safe storage and disposal, and alternatives. Other high-interest topics included spent fuel pool fires and leaks, institutional controls, high-burnup fuel, accidents, terrorism and security, expedited transfer of spent fuel to dry cask storage and hardened onsite storage of fuel, and general opposition to the Rule and GEIS. Detailed information on all correspondence, including authors and ADAMS accession numbers for submissions, is contained in a separate document titled, *Comments on the Waste Confidence Draft Generic Environmental Impact Statement and Proposed Rule*, which is located in ADAMS under Accession No. ML14154A175. Appendix D provides comment summaries and the NRC's responses to comments.

ES.11 What Were the Changes to the Final GEIS?

As stated earlier, the NRC received thousands of comments on the draft GEIS and proposed Rule. The NRC made changes to the final GEIS and proposed Rule to address some of the concerns raised in those comments. The NRC also added a glossary (Chapter 11). Some of the changes to the final GEIS are listed below.

High-Burnup Fuel. Because of interest from the public, the NRC added a new appendix (Appendix I) that provides background information on the licensing, storage, and transportation of high-burnup fuel.

Institutional Controls. Because of the volume of public comment on institutional controls, the NRC added additional information in Appendix B.

Purpose of GEIS, Proposed Federal Action, Purpose and Need, and Alternatives. In response to public comments regarding the structure of the GEIS and the rulemaking, the NRC has revised several sections of Chapter 1. The purpose of the GEIS (see Section 1.3) has been simplified to more clearly focus on determining the environmental impacts of continued storage and determining whether those impacts can be generically addressed. The proposed Federal action (in Section 1.4) is the adoption of a revised Rule that codifies, or adopts into regulation, the environmental impacts of continued storage. The purpose of the rulemaking (in Section 1.5) is to preserve the efficiency of NRC's licensing processes with respect to the environmental impacts of continued storage, and the need (also in Section 1.5) is to provide processes for use in NRC licensing to address the environmental impacts of continued storage. Because only the proposed action preserves the efficiency of the NRC's licensing processes with respect to the environmental impacts of continued storage, the NRC's alternatives analysis (in Section 1.6) focuses on the processes—or options—that the NRC could use in the case of no action. These options include all of the approaches to considering the impacts of continued storage that the NRC considered as alternatives in the draft GEIS. Finally, the NRC has clarified that the NRC's proposed action and its options in the case of no action are all different administrative approaches to addressing the environmental impacts of continued storage, and as such, their environmental impacts are not significant.

Cost-Benefit Analysis. The NRC updated its cost-benefit analysis so that it contains current—and reduced—costs for NRC staffing, as well as discounting that starts from a 2014 baseline instead of a 2013 baseline. All cost-benefit information is now presented in 2014 dollars. In addition, the cost-benefit analysis identifies costs associated with GEIS-development and rulemaking as past (or sunk) costs, but it retains them in the analysis to provide a complete picture of the costs associated with each activity. In addition, the NRC changed the arrangement of sections in Chapter 7 to reflect the revised approach to alternatives. Section 7.2 now contains the proposed action, while subsequent sections (Sections 7.3, 7.4, and 7.5) each contain NRC's options in the case of no action.

Cost of Continued Storage. Due to the large number of comments received on this topic the NRC added cost information for continued storage activities and facilities in Chapter 2.

Technical Feasibility of Safe Storage. Additional information was provided in Appendix B on the role of a regulatory framework and institutional controls during continued storage.

Substantive changes to the final GEIS are indicated by "change bars" in the margins of pages.

ES.12 How did the NRC Evaluate the Continued Storage of Spent Fuel in this GEIS?

The NRC looked at potential environmental impacts of continued storage in three timeframes: short-term storage, long-term storage, and indefinite storage (see Figure ES-1). The short-term and long-term storage timeframes include an assumption that a permanent geologic repository becomes available by the end of those timeframes. The indefinite storage timeframe assumes that a repository never becomes available. For a detailed discussion of the three timeframes, see Section 1.8.2.

The NRC has analyzed three timeframes that represent various scenarios for the length of continued storage that may be needed before spent fuel is sent to a repository. The first, most likely, timeframe is the short-term timeframe, which analyzes 60 years of continued storage after the end of a reactor's licensed life for operation. The NRC acknowledges, however, that the short-term timeframe, although the most likely, is not certain. Accordingly, the GEIS also analyzed two additional timeframes. The long-term timeframe considers the environmental impacts of continued storage for an additional 100 years after the short-term timeframe for a total of 160 years after the end of a reactor's licensed life for operation. Finally, although the NRC considers it highly unlikely, the GEIS includes an analysis of an indefinite timeframe, which assumes that a repository does not become available.

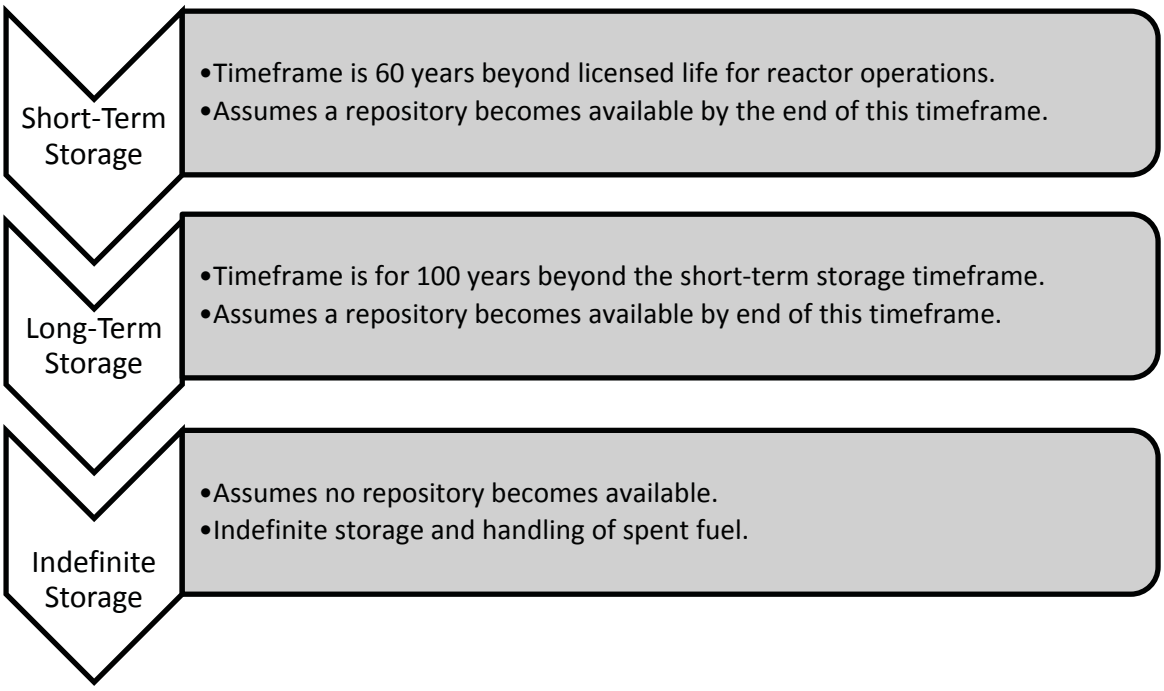

Figure ES-1. Three Storage Timeframes Addressed in this GEIS

To guide its analysis, the NRC also relied on certain assumptions regarding the storage of spent fuel. A detailed discussion of these assumptions is contained in Section 1.8.3. Some of these assumptions are listed below:

- Institutional controls would remain in place.
- Spent fuel canisters and casks would be replaced approximately once every 100 years.
- Independent spent fuel storage installation (ISFSI) and dry transfer system (DTS) facilities would also be replaced approximately once every 100 years.
- A DTS would be built at each ISFSI location for fuel repackaging.
- All spent fuel would be moved from spent fuel pools to dry storage by the end of the short-term storage timeframe (60 years).
- In accordance with NEPA, the analyses in the GEIS are based on current technology and regulations.

An ***ISFSI*** is a facility designed and constructed for the interim storage of spent fuel. Typically, spent fuel is stored in dry cask storage systems. NRC requirements state that dry cask storage must shield people and the environment from radiation and keep the spent fuel inside dry and nonreactive.

DTSs would be built at ISFSI sites (at-reactor or away-from-reactor) in the long-term storage timeframe. A DTS would enable retrieval of spent fuel for inspection or repackaging without the need to return the spent fuel to a spent fuel pool.

The NRC used previous environmental evaluations and technical reports to help inform the impact determinations in this GEIS. Chapter 1 includes a list of NEPA documents used in the development of the GEIS, and the end of each chapter includes a complete list of references. References are publicly available, and most are available in ADAMS.

ES.13 What Facilities and Activities are Addressed in the GEIS?

Chapter 2 describes typical facility characteristics and activities that the NRC used to assess the environmental impacts of continued storage of spent fuel. The GEIS looked at spent fuel storage at single- and multiple-reactor nuclear power plant sites, in spent fuel pools, at-reactor ISFSIs, and away-from-reactor ISFSIs. In addition to existing reactor designs and conventional spent fuel, the NRC also considered reactor and fuel technologies such as mixed oxide fuel (MOX) and small modular reactors.

Section 2.2 describes the activities related to the storage of spent fuel that are expected to occur during the three storage timeframes (short-term, long-term, and indefinite).

- The *short-term storage* timeframe (60 years beyond the licensed life for operation of the reactor) includes routine maintenance and monitoring of the spent fuel pool and ISFSI and transferring spent fuel from pools to dry cask storage. Because decommissioning is required to be completed within 60 years after a reactor shuts down (unless additional time is necessary to protect public health and safety), the NRC assumes that all spent fuel will be moved from spent fuel pools to dry cask storage by the end of the short-term storage timeframe. For an away-from-reactor ISFSI, this timeframe includes construction and operation, including routine maintenance and monitoring, at the facility.
- The *long-term storage* timeframe (100 years beyond the initial 60-year [short-term] storage timeframe) includes activities such as continued facility maintenance, construction and operation of a DTS, and replacement of ISFSI and DTS facilities, including casks.
- The *indefinite storage* timeframe (no repository becomes available) assumes that the activities associated with long-term storage continue indefinitely, with ISFSI and DTS facilities being replaced at least once every 100 years.

MOX fuel is a type of nuclear reactor fuel that contains plutonium oxide mixed with either natural or depleted uranium oxide, in ceramic pellet form. This fuel differs from conventional nuclear fuel, which is made of pure uranium oxide.

Small modular reactors are nuclear power plants smaller in size (e.g., 300 MW(e)) than current generation baseload plants (e.g., 1,000 MW(e) or higher). These compactly designed reactors are factory-fabricated and can be transported by truck or rail to a nuclear power plant site.

The NRC also looked at ongoing regulatory activities that could affect the continued storage of spent fuel, including regulatory changes resulting from lessons learned from the September 11, 2001 terrorist attacks and the March 11, 2011 earthquake and tsunami that damaged the Fukushima Dai-ichi plant in Japan. Appendix B discusses a number of ongoing regulatory program reviews that ensure the safety and security of spent fuel storage and transportation.

ES.14 How did the NRC Describe Environmental Impacts?

NRC used terms from other NEPA documents, such as those for license renewal or new reactors, to define the standard of significance for assessing environmental issues.

SMALL—Environmental effects are not detectable or are so minor that they will neither destabilize nor noticeably alter any important attribute of the resource.

MODERATE—Environmental effects are sufficient to alter noticeably, but not to destabilize, important attributes of the resource.

LARGE—Environmental effects are clearly noticeable and are sufficient to destabilize important attributes of the resource.

For *risk-based determinations* (such as in the NRC's analyses of severe accidents such as spent fuel pool fires), the probability of occurrence as well as the potential consequences have been factored into the determination of significance.

ES.15 What Environmental Resource Areas did the NRC Consider?

Chapter 3 discusses the environment that exists at and around the facilities where spent fuel is stored in spent fuel pools and at-reactor ISFSIs. This description of resources provides information that is incorporated into the analyses of environmental impacts of continued storage in Chapter 4 (at-reactor impacts) and Chapter 6 (cumulative impacts). The License Renewal GEIS (NUREG–1437) was the primary source of information in Chapter 3. The NRC also referenced information from site-specific environmental reviews, such as those for initial and renewal ISFSI licenses, the renewal of operating licenses, and combined licenses for new reactors. The affected resource areas and attributes discussed in the GEIS are listed in Table ES-1.

The affected environment and potential impacts of continued storage at an away-from-reactor ISFSI are discussed in Chapter 5 (away-from-reactor impacts). The analysis of away-from-reactor spent fuel storage in Chapter 5 is based, in general, on the description of the affected environment provided in Chapter 3. However, some aspects of those discussions would not be applicable, or would not be applicable in the same way, for an away-from-reactor ISFSI. This generic analysis is based, in part, on the siting evaluation factors in 10 CFR Part 72, Subpart E, which the location selected for the away-from-reactor ISFSI must meet. Further, for the analysis of continued storage at an away-from-reactor ISFSI, the term ISFSI refers to all of the original facilities that would be built (i.e., storage pads, casks, and canister transfer building).

The affected resource areas and attributes discussed in Chapter 5 of the GEIS are listed in Table ES-2.

Table ES-1. Affected Resource Areas for At-Reactor Spent Fuel Storage

Affected Resource Area	Attributes
Land Use	Site areas and land requirements for operating nuclear power plants; land requirements for at-reactor ISFSIs; general land characteristics and coverage; land use in the vicinity of nuclear power plants; locations of nuclear power plants
Socioeconomics	Regional social, economic, and demographic conditions around nuclear power plant sites, including employment, taxes, public services, housing demand, and traffic
Environmental Justice	Human health and environmental effects; minority and low-income populations; subsistence consumption of fish and wildlife
Climate and Air Quality	Local and regional climate and air quality, including criteria pollutants and greenhouse gases
Geology and Soils	The physical setting of nuclear power plants and associated geologic strata and soils; different physiographic provinces in the United States
Water Resources	Surface-water and groundwater use and quality; existing radioactive leaks at nuclear power plants and tritium contamination of groundwater
Ecological Resources	Terrestrial and aquatic resources, including varied habitat such as wetlands and floodplains, wildlife, aquatic organisms, and threatened, endangered, and protected species and habitat
Historic and Cultural Resources	Historic and cultural resources that could be present at nuclear power plant sites
Noise	Ambient noise levels around existing spent fuel storage sites
Aesthetics	The existing scenic quality of spent fuel storage sites, including viewsheds with water bodies, topographic features, other visual landscape characteristics
Waste Management	Wastes generated by continued storage of spent fuel, including low-level radioactive waste, hazardous waste, mixed waste, nonradioactive/nonhazardous waste; pollution prevention and waste minimization; capacity of disposal facilities
Transportation	Transportation characteristics of reactor sites; workers involved in transportation activities; local, regional, and national transportation networks; populations that use them
Public and Occupational Health	NRC requirements for radiological protection of the public and workers from the continued storage of spent fuel; public radiation doses from natural and artificial sources; regulatory framework for occupational hazards

Table ES-2. Affected Resource Areas for Away-From-Reactor Spent Fuel Storage

Affected Resource Area	Attributes
Land Use	Site areas and land requirements for an away-from-reactor ISFSI to store 40,000 MTU; general land characteristics and coverage
Socioeconomics	Regional social, economic, and demographic conditions, including employment, taxes, public services, housing demand, and traffic
Environmental Justice	Human health and environmental effects; minority and low-income populations; subsistence consumption of fish and wildlife
Climate and Air Quality	Local and regional climate and air quality, including criteria pollutants and greenhouse gases
Geology and Soils	The physical setting and associated geologic strata and soils; the different physiographic provinces in the United States
Water Resources	Surface-water and groundwater use and quality
Ecological Resources	Terrestrial and aquatic resources, including varied habitat such as wetlands and floodplains, wildlife, aquatic organisms, and threatened, endangered, and protected species and habitat
Historic and Cultural Resources	Historic and cultural resources that could be present at an away-from-reactor ISFSI site
Noise	Ambient noise levels around general construction sites
Aesthetics	The existing scenic quality, including viewsheds with water bodies, topographic features, or other visual landscape characteristics
Waste Management	Wastes generated by continued storage of spent fuel, including low-level radioactive waste, hazardous waste, mixed waste, nonradioactive/nonhazardous waste; pollution prevention and waste minimization; capacity of disposal facilities
Transportation	Transportation characteristics; workers involved in transportation activities; local, regional, and national transportation networks and populations that use them
Public and Occupational Health	NRC requirements for radiological protection of the public and workers from the continued storage of spent fuel; public radiation doses from natural and artificial sources; the regulatory framework for occupational hazards

ES.16 What are the Environmental Impacts of Continued Storage?

Chapter 4 addresses potential environmental impacts of at-reactor continued storage in spent fuel pools and at-reactor ISFSIs. Chapter 5 addresses impacts at away-from-reactor ISFSIs. As applicable for each resource area, impact determinations were made for each of the three spent fuel storage timeframes: short-term, long-term, and indefinite. The following pages provide a short synopsis of impacts, followed by summary tables (Tables ES-3 and ES-4). At-reactor impacts of continued storage are addressed first, followed by away-from-reactor

impacts. For some resource areas, the impact determination language is specific to the authorizing regulation, executive order, or guidance.

ES.16.1 Environmental Impacts of At-Reactor Spent Fuel Storage

ES.16.1.1 Land Use

Short-Term Storage. Impacts would be SMALL. Continued at-reactor storage in a spent fuel pool or ISFSI would not require disturbance of any new land or result in operational or maintenance activities that would change land use.

Long-Term Storage. Impacts would be SMALL. Long-term storage at an at-reactor ISFSI would not result in operational or maintenance activities that would change land-use conditions. Construction of a DTS and replacement of an ISFSI and a DTS after 100 years would impact a small fraction of the land committed for a nuclear power plant.

Indefinite Storage. Impacts would be SMALL. Impacts would be similar to long-term impacts—a small fraction of land would be impacted and land-use conditions would not change. Older ISFSIs and DTS facilities would be demolished, and that land would be reclaimed or reused as part of the cyclic replacements.

ES.16.1.2 Socioeconomics

Short-Term Storage. Impacts would be SMALL. A small number of workers would be required to maintain and monitor spent fuel pools and an at-reactor ISFSI, tax payments to local jurisdictions would continue, and there would be no increased demand for housing and public services.

Long-Term Storage. Impacts would be SMALL. The construction of a DTS would take about 1 to 2 years and the size of the construction and ISFSI replacement and operations workforce would be small. Tax payments would continue and would remain relatively constant at post-reactor operations levels. Additionally, there would be no increased demand for housing and public services.

Indefinite Storage. Impacts would be SMALL. Impacts would be similar to those described for long-term storage. The workforce required for monitoring and replacement of DTS facilities and ISFSIs would be small. Property tax revenue would continue as long as spent fuel remains onsite.

ES.16.1.3 Environmental Justice

Short-Term Storage. Continued maintenance and monitoring of spent fuel pools and at-reactor ISFSIs would have minimal human health and environmental effects on all populations including minority and low-income populations. Overall human health and environmental effects from continued short-term spent fuel storage would be limited in scope and SMALL for all populations. Therefore, minority and low-income populations are not expected to experience disproportionately high and adverse human health and environmental effects from the continued short-term storage of spent fuel.

Long-Term Storage. Continued maintenance and monitoring of spent fuel in at-reactor ISFSIs would have minimal human health and environmental effects on all populations including minority and low-income populations near these storage facilities. Overall human health and environmental effects from continued long-term spent fuel storage would be limited in scope and SMALL for all populations, except for historic and cultural resources, which would be SMALL to LARGE. Therefore, minority and low-income populations are not expected to experience disproportionately high and adverse human health and environmental effects from the continued long-term storage of spent fuel.

Indefinite Storage. Indefinite maintenance and monitoring of spent fuel in at-reactor ISFSIs would have minimal human health and environmental effects on all populations including minority and low-income populations near these storage facilities. Overall human health and environmental effects during indefinite storage of spent fuel would be the same as those described for long-term storage, except for the effects of nonradioactive waste generation and disposal, which would be SMALL to MODERATE. Therefore, minority and low-income populations are not expected to experience disproportionately high and adverse human health and environmental effects from the indefinite storage of spent fuel.

ES.16.1.4 Air Quality

Short-Term Storage. Impacts would be SMALL. Air emission impacts from spent fuel storage activities from spent fuel pools and ISFSIs during short-term storage would be substantially smaller than air emissions during power generation. Air temperature changes near dry casks would be indistinguishable from temperature changes that occur naturally.

Long-Term Storage. Impacts would be SMALL. Construction of a DTS, ongoing operation and maintenance of the storage facilities, and replacement of an ISFSI and DTS after 100 years would result in minor and temporary air emissions.

Indefinite Storage. Impacts would be SMALL. Impacts would be similar to those for long-term storage ISFSI and DTS operations, and replacement activities would result in minor and temporary air emissions.

ES.16.1.5 Climate Change

Short-Term Storage. Impacts would be SMALL. The annual level of greenhouse gases generated during continued storage is a small percentage of the annual levels generated in the United States.

Greenhouse gases are gases that trap heat in the atmosphere. The most common greenhouse gases are carbon dioxide, methane, nitrous oxide, and fluorinated gases. Greenhouse gases contribute to global climate change.

Long-Term Storage. Impacts would be SMALL. Impacts would be similar to short-term impacts, and greenhouse gas emissions would be a small fraction of the overall level in the United States.

Indefinite Storage. Impacts would be SMALL. Greenhouse gas emissions would continue to be similar to long-term impacts; they would be a small fraction of the overall level in the United States.

ES.16.1.6 Geology and Soils

Short-Term Storage. Impacts would be SMALL. Continued spent fuel pool operation is not expected to increase impacts to soil and geology. Impacts to soil from small spills and leaks during operation and maintenance of ISFSIs would be minor because of monitoring and environmental protection regulations. No new land would be disturbed for continued operation of spent fuel pools and ISFSIs.

Long-Term Storage. Impacts would be SMALL. Construction, operation, and replacement of the DTS and ISFSI would have minimal impacts to soils on the small fraction of land committed for the facilities, including soil compaction, soil erosion, and potential leaks of oils, greases, and other construction materials. Ongoing operation and maintenance of ISFSIs and DTSs would not be expected to have any additional impacts above those associated with construction. No impacts to geology would be expected.

Indefinite Storage. Impacts would be SMALL. Impacts would be similar to those for long-term storage. Replacement of ISFSIs and DTS facilities would occur on previously disturbed land and would minimize impacts to soils and geology.

ES.16.1.7 Surface-Water Quality and Use

Short-Term Storage. Impacts would be SMALL. Although unlikely, groundwater contamination could affect surface-water quality (see discussion in Appendix E of the GEIS). Potential impacts to surface-water quality and consumptive use from the continued operation of spent fuel pools and ISFSIs would be less than for normal plant operations.

Long-Term Storage. Impacts would be SMALL. Potential consumptive-use and surface-water quality impacts from construction and operation of a DTS would be minor, and replacement of the DTS and ISFSI would be less intense than assumed for initial construction of these facilities.

Indefinite Storage. Impacts would be SMALL. Impacts would be similar to those for long-term storage. Replacement of ISFSIs and DTS facilities once every 100 years would result in temporary and minimal impacts to surface-water quality and use.

ES.16.1.8 Groundwater Quality and Use

Short-Term Storage. Impacts would be SMALL. Groundwater use would be significantly less than that used during reactor operations. Continued storage of spent fuel could result in nonradiological and radiological impacts to groundwater quality. In the unlikely event a spent fuel pool leak remained undetected for a long period of time, contamination of a groundwater source above a regulatory limit could occur (e.g., a Maximum Contaminant Level for one or more radionuclides). Appendix E of the GEIS contains additional supporting analysis of the environmental impacts from spent fuel pool leaks. The analysis concludes that (1) there is a low probability of a leak of sufficient quantity and duration to affect offsite locations and (2) physical processes associated with radionuclide transport, site hydrologic characteristics, and environmental monitoring programs ensure that impacts from spent fuel pool leaks would be unlikely. Impacts to groundwater from continued storage in ISFSIs would be minimal because ISFSI storage requires minimal water and produces minimal, localized, and easy-to-remediate liquid effluents on or near ground surface.

Long-Term Storage. Impacts would be SMALL. Construction of a DTS would require minimal groundwater use. With regard to storage facility-replacement activities, groundwater consumptive use and quality impacts would be similar to those for initial construction of the facilities, and would be minor and temporary.

Indefinite Storage. Impacts would be SMALL. Impacts would be similar to those for long-term storage. Once every 100 years, groundwater would be required for demolishing and replacing the ISFSI and DTS facilities. Consumptive use of groundwater and water-quality impacts would be minor and temporary.

ES.16.1.9 Terrestrial Resources

Short-Term Storage. Impacts would be SMALL. Impacts associated with the operation of spent fuel pools would likely be bounded by the impacts analyzed in the License Renewal GEIS for those issues that were addressed generically in the License Renewal GEIS. For the issue of water-use conflicts with terrestrial resources at plants with cooling ponds or cooling towers using makeup water from a river, the NRC determined that the impacts from operating the spent fuel pool during the short-term storage timeframe would be minimal, because the water withdrawal

requirements for spent fuel pool cooling are considerably lower than those for a power reactor. Impacts associated with operating an at-reactor ISFSI would be minimal and similar to those described in EAs reviewed for preparation of the GEIS (see Table 1-1).

Long-Term Storage. Impacts would be SMALL. Construction, repackaging, and replacement activities for the ISFSI and DTS would have minimal impacts on terrestrial resources. Normal operations and replacement of DTS and ISFSI facilities would not generate significant noise, would not significantly affect the area available for terrestrial wildlife, and would not adversely impact terrestrial environments or their associated plant and animal species.

Indefinite Storage. Impacts would be SMALL. Impacts would be similar to long-term storage impacts. Replacement of the ISFSI and DTS facilities would occur on land near the existing facilities and could be sited on previously disturbed ground and away from terrestrial species and habitat.

ES.16.1.10 Aquatic Ecology

Short-Term Storage. Impacts would be SMALL. Impacts associated with the operation of spent fuel pools would likely be minimal and bounded by the impacts analyzed in the License Renewal GEIS because of the lower withdrawal rates, lower discharge rates, and smaller thermal plume for a spent fuel pool compared to an operating reactor with closed-cycle cooling. Impacts from operation of onsite ISFSIs would be minimal because ISFSIs do not require water for cooling, and ground-disturbing activities would have minimal impacts on aquatic ecology.

Long-Term Storage. Impacts would be SMALL. Construction, repackaging, and replacement activities for the ISFSI and DTS would have minimal impacts on aquatic resources. The ISFSI and DTS would not require water for cooling, would produce minimal gaseous or liquid effluents, and would have minimal impacts on aquatic resources.

Indefinite Storage. Impacts would be SMALL. Activities and impacts to aquatic resources would be similar to those described for long-term storage, although complete repackaging would occur once every 100 years. Replacement of ISFSI and DTS facilities would occur on land near existing facilities and could be sited on previously disturbed ground and away from sensitive aquatic features.

ES.16.1.11 Special Status Species and Habitat

Short-Term Storage. If continued operation of an ISFSI or spent fuel pool could affect Federally listed species or designated critical habitat, and if the criteria are met in 50 CFR Part 402 for initiation or reinitiation of Endangered Species Act (ESA), Section 7 consultation, the NRC would be required to initiate or reinitiate ESA Section 7 consultation with the National Marine

Fisheries Services (NMFS) or U.S. Fish and Wildlife Service (FWS). With regard to spent fuel pools, impacts on State-listed species and marine mammals would most likely be less than those experienced during the licensed life for operation of the reactor because of the smaller size of the spent fuel pool's cooling system and lower water demands when compared to those of an operating reactor. With regard to dry cask storage of spent fuel, given the small size and ability to site ISFSI facilities away from sensitive ecological resources, the NRC concludes that continued storage of spent fuel in at-reactor ISFSIs would likely have minimal impacts on State-listed species, marine mammals, migratory birds, and bald and golden eagles.

Endangered Species Act, Section 7, called "Interagency Cooperation," is the mechanism by which Federal agencies ensure that the actions they take, including those they fund or authorize, do not jeopardize the existence of any listed species. Under Section 7, the NRC must consult with the U.S. Fish and Wildlife Service or National Marine Fisheries Service when any action the NRC carries out, funds, or authorizes (such as through a permit) *may affect* a listed endangered or threatened species.

Long-Term Storage. In addition to routine maintenance and monitoring of ISFSIs, impacts from the construction of a DTS and replacement of the DTS and ISFSIs on special status species and habitat would be minimal because of the small size of the ISFSI and DTS facilities and because no water is required for cooling. The NRC assumes that the ISFSI and DTS facilities could be sited to avoid listed species and critical habitat because of the small size of the construction footprint and sufficient amount of previously disturbed areas on most nuclear power plant sites. Therefore, the NRC concludes that construction of a DTS and the replacement of the DTS and ISFSI would likely have minimal impacts on State-listed species, marine mammals, migratory birds, and bald and golden eagles. In the unlikely situation that the continued operation of an ISFSI could affect Federally listed species or designated critical habitat, and if the criteria are met in 50 CFR Part 402 for initiation or reinitiation of ESA Section 7 consultation, then the NRC would be required to initiate or reinitiate ESA Section 7 consultation with the NMFS or FWS.

Indefinite Storage. Impacts from indefinite storage on State-listed species, marine mammals, migratory birds, and bald and golden eagles would be minimal. The same consultation and any associated mitigation requirements described for the long-term storage timeframe would apply to the construction of the DTS and replacement of the DTS and ISFSI facilities during indefinite storage. In the unlikely situation that the continued operation of an ISFSI could affect Federally listed species or designated critical habitat, and if the criteria are met in 50 CFR Part 402 for initiation or reinitiation of ESA Section 7 consultation, the NRC would be required to initiate or reinitiate ESA Section 7 consultation with the NMFS or FWS.

ES.16.1.12 Historic and Cultural Resources

Short-Term Storage. Impacts would be SMALL. Because no ground-disturbing activities are anticipated during the short-term storage timeframe, impacts to historic and cultural resources associated with continued operations and maintenance would be SMALL.

Long-Term Storage. Impacts would be SMALL to LARGE. Impacts from continued operations and routine maintenance are expected to be SMALL during the long-term storage timeframe, similar to those described in the short-term storage timeframe. NRC authorization to construct and operate a DTS and to replace a specifically licensed at-reactor ISFSI and DTS would constitute Federal actions under NEPA and would require site-specific environmental reviews and compliance with the National Historic Preservation Act of 1966 (NHPA) before making a decision on the licensing action. For generally licensed ISFSIs, impacts could be avoided, minimized or mitigated if the licensee has management plans or procedures that require consideration of these resources prior to ground-disturbing activities. The NRC assumes that the replacement of the at-reactor ISFSI and DTS would be constructed on land near the existing facilities. As discussed below, the NRC recognizes that there is uncertainty associated with the degree of prior disturbance and the resources, if any, present in areas where future ground-disturbing activities (i.e., initial and replacement DTS and replacement ISFSI) could occur. The NRC cannot eliminate the possibility that historic and cultural resources would be affected by construction activities during the long-term timeframe because the initial ISFSI could be located within a less-disturbed area with historic and cultural resources in close proximity. Further, resources may be present that would not have been considered significant at the time the initial facilities were constructed, but could become significant in the future. Therefore, the potential impacts to historic and cultural resources would be SMALL to LARGE. This range takes into consideration routine maintenance and monitoring (i.e., no ground-disturbing activities), the absence or avoidance of historic and cultural resources, and potential ground-disturbing activities that could impact historic and cultural resources. In addition, the analysis considers uncertainties inherent in analyzing this resource area over long timeframes. These uncertainties include any future discovery of previously unknown historic and cultural resources; resources that gain significance within the vicinity and the viewshed (e.g., nomination of a historic district) due to improvements in knowledge, technology, and excavation techniques; and changes associated with predicting resources that future generations will consider significant. If construction of a DTS and replacement of the ISFSI and DTS occurs in an area with no historic or cultural resource present or construction occurs in previously a disturbed area that allows avoidance of historic and cultural resources then impacts would be SMALL. By contrast, a MODERATE or LARGE impact could result if historic and cultural resources are present at a site and, because they cannot be avoided, are impacted by ground-disturbing activities during the long-term timeframe.

Indefinite Storage. Impacts would be SMALL to LARGE. Impacts regarding the replacement of the ISFSI and DTS would be similar to those described in the long-term storage timeframe. The NRC assumes that replacement at-reactor ISFSI and DTS would be constructed on land near the existing facilities. As stated in Section 1.8, the NRC assumes that the land where the original facilities were constructed will be available for replacement facility construction; however, the NRC cannot eliminate the possibility that historic and cultural resources would be affected by construction activities during the indefinite timeframe because the initial and replacement ISFSIs and DTS could be located within a less disturbed area with historic and cultural resources in close proximity. Further, resources may be present that would not have been considered significant at the time the initial or replacement facilities were constructed, but could become significant in the future. Impacts to historic and cultural resources would be SMALL to LARGE. This range takes into consideration routine maintenance and monitoring (i.e., no ground-disturbing activities), the absence or avoidance of historic and cultural resources, and potential ground-disturbing activities that could impact historic and cultural resources. The analysis also considers the uncertainties inherent in analyzing this resource area over long timeframes. These uncertainties include any future discovery of previously unknown historic and cultural resources; resources that gain significance within the vicinity and the viewshed (e.g., nomination of a historic district) due to improvements in knowledge, technology, and excavation techniques, and changes associated with predicting resources that future generations will consider significant. If construction of a DTS and replacement of the ISFSI and DTS occurs in an area with no historic or cultural resource present or construction occurs in previously a disturbed area that allows avoidance of historic and cultural resources then impacts would be SMALL. By contrast, a MODERATE or LARGE impact could result if historic and cultural resources are present at a site and, because they cannot be avoided, are impacted by ground-disturbing activities during the indefinite timeframe.

ES.16.1.13 Noise

Short-Term Storage. Impacts would be SMALL. Spent fuel pool and dry cask storage noise levels, noise duration, and distance between noise sources and receptors would generally not be expected to produce noise impacts noticeable to the surrounding community.

Long-Term Storage. Impacts would be SMALL. Construction of the DTS and replacement of the DTS and ISFSI, although temporary and representing a small portion of the overall time period for spent fuel storage, would generate noise levels that exceed EPA-recommended noise levels. Noise from dry cask storage operations would be infrequent and at lower levels than for construction or replacement activities. Generally, for spent fuel storage, the noise levels, noise duration, and distance between the noise sources and receptors would not be expected to produce noise impacts noticeable to the surrounding community.

Indefinite Storage. Impacts would be SMALL. Most noise would be generated by construction equipment associated with the replacement of the ISFSI and DTS facilities; impacts would be similar to those during the long-term storage timeframe.

ES.16.1.14 Aesthetics

Short-Term Storage. Impacts would be SMALL. No changes to the visual profile are likely to occur as a result of the continued operation and maintenance of the existing spent fuel pool and at-reactor ISFSI.

Long-Term Storage. Impacts would be SMALL. Periodic construction, replacement, and operation activities would not significantly alter the landscape of an ISFSI.

Indefinite Storage. Impacts would be SMALL. Impacts would be similar to long-term storage and would not significantly alter the landscape of an ISFSI.

ES.16.1.15 Waste Management

Short-Term Storage. Impacts would be SMALL. Continued at-reactor storage of spent fuel would generate much less low-level, mixed, and nonradioactive waste than an operating facility, and licensees would continue to implement Federal and State regulations and requirements regarding proper management and disposal of wastes.

Long-Term Storage. Impacts would be SMALL. The replacement of the ISFSI, repackaging of spent fuel canisters, and construction, operation, and replacement of the DTS would generate a fraction of the low-level waste (LLW) generated during reactor decommissioning, and LLW would continue to be managed according to Federal and State regulations. The quantity of mixed waste generated from long-term storage would be a small fraction of that generated during the licensed life of the reactor. Although large amounts of nonradioactive waste would be generated by replacement of dry cask storage facilities, it would still be less than the waste generated during reactor decommissioning and would not likely have a noticeable impact on local or regional landfill capacity and operations.

> **Low-level waste** is a general term for a wide range of items that have become contaminated with radioactive material or have become radioactive through exposure to neutron radiation. The radioactivity in these wastes can range from just above natural background levels to much higher levels, such as seen in parts from inside the reactor vessel in a nuclear power reactor.
>
> **Mixed waste** contains two components: low-level radioactive waste and hazardous waste, as defined in EPA regulations.

Indefinite Storage. Impacts would be SMALL to MODERATE. It is expected that sufficient LLW disposal capacity would be made available when needed. A relatively small quantity of mixed waste would be generated from indefinite storage and proper management and disposal

regulations would be followed. The amount of nonradioactive waste that would be generated and impacts to nonradioactive waste landfill capacity are difficult to accurately estimate for the indefinite storage timeframe and therefore could result in SMALL to MODERATE impacts.

ES.16.1.16 Transportation

Short-Term Storage. Impacts would be SMALL. A low volume of traffic and shipping activities is expected with the continued storage of spent fuel in spent fuel pools and at-reactor ISFSIs.

Long-Term Storage. Impacts would be SMALL. There would be small workforce requirements for continued storage and aging management activities (relative to the power plant workforce) and a low frequency of supply shipments and shipments of LLW from DTS activities, continued dry cask storage operations, and ISFSI and DTS replacement activities.

Indefinite Storage. Impacts would be SMALL. There would be no significant changes to the annual magnitude of traffic or waste shipments that were identified for long-term storage.

ES.16.1.17 Public and Occupational Health

Short-Term Storage. Impacts would be SMALL. Annual public and occupational doses would be maintained below the annual dose limits established by 10 CFR Part 72 for the public and 10 CFR Part 20 for occupational personnel. Licensed facilities would also be required by the above regulations to maintain an as-low-as-is-reasonably-achievable (ALARA) program, which would likely reduce the doses even further. Appendix E of the GEIS provides additional information to support the environmental impact determination with respect to leaks from spent fuel pools on public health. Public health regulatory limits could be exceeded in the unlikely event a spent fuel pool leak remained undetected for a long period of time. Preventive maintenance activities would be conducted in accordance with Occupational Safety and Health Agency requirements and risks to occupational health and safety would be infrequent and minor.

ALARA is an acronym for "as low as (is) reasonably achievable," which means making every reasonable effort to maintain exposures to ionizing radiation as far below the dose limits as practical.

Long-Term Storage. Impacts would be SMALL. Public and occupational doses would be maintained well below the dose limits established by 10 CFR Part 72 for the public and 10 CFR Part 20 for occupational personnel. Licensed facilities would also be required by these regulations to maintain an ALARA program to ensure radiation doses are maintained as low as is

10 CFR Part 20 contains the NRC's radiation protection regulations.

10 CFR Part 72 contains the NRC's regulations for licensing storage facilities for spent fuel and other radioactive waste.

reasonably achievable. Construction activities for the DTS would be conducted in accordance with Occupational Safety and Health Agency requirements, and once in operation, ISFSI preventive maintenance would be infrequent and minor.

Indefinite Storage. Impacts would be SMALL. Impacts to public and occupation health are expected to be similar to those from long-term spent fuel storage activities.

ES.16.1.18 Environmental Impacts of Postulated Accidents

Because the accident risks for spent fuel pool storage only apply during the short-term timeframe and the accident risks for dry cask storage are substantially the same across the three timeframes, the GEIS does not present the various accident types by timeframe, but rather by accident type (i.e., design basis and severe) and storage facility type (i.e., spent fuel pool and dry cask storage system).

Design Basis Accidents in Spent Fuel Pools. Impacts would be SMALL. The postulated design basis accidents considered in this GEIS for spent fuel pools include hazards from natural phenomena, such as earthquakes, floods, tornadoes, and hurricanes; hazards from activities in the nearby facilities; and fuel handling-related accidents. In addition, potential effects of climate change are also considered. Based on the assessment in Section 4.18, the environmental impacts of these postulated accidents involving continued storage of spent fuel in pools are SMALL because all important safety structures, systems, and components involved with the spent fuel storage are designed to withstand these design basis accidents without compromising the safety functions.

> A **design basis accident** is a postulated accident that a nuclear facility must be designed and built to withstand without loss to the systems, structures, and components necessary to ensure public health and safety.

Design Basis Accidents in Dry Cask Storage Systems and Dry Transfer Systems. Impacts would be SMALL. All NRC-licensed dry cask storage systems are designed to withstand all postulated design basis accidents without any loss of safety functions. A DTS or a facility with equivalent capabilities may be needed to enable retrieval of spent fuel for inspection or repackaging. Licensees of DTS facilities are required to design the facilities so that all safety-related structures, systems, and components can withstand the design basis accidents without compromising any safety functions. Based on the assessment, the environmental impact of the design basis accidents is SMALL because safety-related structures, systems, and components are designed to function in case of these accidents.

> A **severe accident** is a type of accident that may challenge safety systems at a level much higher than expected.

Severe Accidents in Spent Fuel Pools. Probability-weighted impacts would be SMALL. A spent fuel pool may encounter severe events, such as loss of offsite power or beyond design basis earthquakes. Although it is theoretically possible that these events may lead to loss of spent

fuel pool cooling function resulting in a spent fuel pool fire, the likelihood of such events is extremely small. Additional discussion about spent fuel pool fires can be found in Appendix F.

Severe Accidents in Dry Cask Storage Systems. Probability-weighted impacts would be SMALL. Although some handling accidents such as a postulated drop of a canister could exceed NRC's public dose standards, the likelihood of the event is very low. Therefore, the environmental impact of severe accidents in a dry storage facility is SMALL.

ES.16.1.19 Potential Acts of Sabotage or Terrorism

Although the NRC believes that NEPA does not require such an analysis and that it is only required for facilities within the Ninth Circuit, the NRC finds that even though the environmental consequences of a successful attack on a spent fuel pool beyond the licensed life for operation of a reactor are large, the very low probability of a successful attack ensures that the environmental risk is SMALL. Similarly, for an operational ISFSI or DTS during continued storage, the NRC finds that the environmental risk of a successful radiological sabotage attack is SMALL.

Table ES-3. Summary of Environmental Impacts of Continued At-Reactor Storage

Resource Area	Short-Term Storage	Long-Term Storage	Indefinite Storage
Land Use	SMALL	SMALL	SMALL
Socioeconomics	SMALL	SMALL	SMALL
Environmental Justice	Disproportionately high and adverse impacts are not expected.		
Air Quality	SMALL	SMALL	SMALL
Climate Change	SMALL	SMALL	SMALL
Geology and Soils	SMALL	SMALL	SMALL
Surface Water			
Quality	SMALL	SMALL	SMALL
Consumptive Use	SMALL	SMALL	SMALL
Groundwater			
Quality	SMALL	SMALL	SMALL
Consumptive Use	SMALL	SMALL	SMALL
Terrestrial Resources	SMALL	SMALL	SMALL
Aquatic Ecology	SMALL	SMALL	SMALL
Special Status Species and Habitat	Impacts for Federally listed threatened and endangered species and Essential Fish Habitat would be determined as part of the consultations for the ESA and the Magnuson–Stevens Fishery Conservation and Management Act.		

Table ES-3. Summary of Environmental Impacts of Continued At-Reactor Storage (cont'd)

Resource Area	Short-Term Storage	Long-Term Storage	Indefinite Storage
Historic and Cultural Resources	SMALL	SMALL to LARGE	SMALL to LARGE
Noise	SMALL	SMALL	SMALL
Aesthetics	SMALL	SMALL	SMALL
Waste Management			
Low-Level Waste	SMALL	SMALL	SMALL
Mixed Waste	SMALL	SMALL	SMALL
Nonradioactive Waste	SMALL	SMALL	SMALL to MODERATE
Transportation	SMALL	SMALL	SMALL
Public and Occupational Health	SMALL	SMALL	SMALL
Accidents	SMALL	SMALL	SMALL
Sabotage or Terrorism	SMALL	SMALL	SMALL

ES.16.2 Environmental Impacts of Away-From-Reactor Spent Fuel Storage

No away-from-reactor ISFSIs of the size considered in Chapter 5 (40,000 metric tons uranium) have been constructed in the United States. For the analysis of environmental impacts in Chapter 5, the NRC assumes that construction and operation of an away-from-reactor ISFSI would be similar to that proposed for the Private Fuel Storage Facility on the Reservation of the Skull Valley Band of Goshute Indians in Tooele County, Utah. The NRC previously analyzed the environmental impacts of constructing and operating the Private Fuel Storage Facility in NUREG–1714. For the analysis of continued storage at an away-from-reactor ISFSI, the term ISFSI refers to all of the original facilities that would be built (i.e., storage pads, casks, and canister transfer building).

ES.16.2.1 Land Use

Short-Term Storage. Impacts would be SMALL. Construction of an ISFSI would change the nature of land use within the site boundary and along access corridors. While this change could be qualitatively substantial (e.g., from agricultural to industrial), the land parcel is assumed to be sufficiently remote and small that no quantitatively significant impact would occur.

Long-Term Storage. Impacts would be SMALL. Construction of a DTS would disturb a small portion of the land committed for an away-from-reactor storage facility. To minimize land-use impacts from replacement of the ISFSI and DTS facilities, the replacement facilities would likely be constructed on land near the existing facilities, and the old facilities would likely be demolished and the land reclaimed.

Indefinite Storage. Impacts would be SMALL. Only a small portion of the total land committed for development of an away-from-reactor ISFSI is required to support continued operations, including periodic maintenance or replacement of equipment and repackaging of fuel. Replacement of the away-from-reactor ISFSI and DTS every 100 years would likely occur on land near the existing facilities.

ES.16.2.2 Socioeconomics

Short-Term Storage. Adverse impacts would be SMALL. Based on the small workforce required for construction and operations of an away-from-reactor facility, and any associated indirect impacts to public services and housing, the impacts of construction and operation of a storage facility on those resources would be minor. Beneficial impacts to the economy could be LARGE in some rural economies.

Long-Term Storage. Adverse impacts would be SMALL. Construction of a DTS would require a workforce smaller than the workforce required for construction of an away-from-reactor ISFSI. The labor force required for maintenance and replacement activities of an ISFSI and DTS would not be expected to exceed the labor force required for construction of the storage facility as a whole. Beneficial impacts to the economy could be LARGE in some rural economies.

Indefinite Storage. Adverse impacts would be SMALL. If no repository becomes available, operational and replacement activities would continue, beneficial impacts to the economy could be LARGE in some rural economies.

ES.16.2.3 Environmental Justice

Short-Term Storage. The process of siting an away-from-reactor ISFSI would be expected to ensure that environmental justice concerns are addressed prior to licensing. Overall human health and environmental effects from construction of the ISFSI and from continued storage during the short-term timeframe would be limited in scope and SMALL for all populations, except for air quality, terrestrial resources, aesthetics, historic and cultural resources, and socioeconomic and traffic conditions. Minority and low-income populations are not expected to experience disproportionately high and adverse human health and environmental effects from the construction and operation of an away-from-reactor ISFSI. Should the NRC receive an application for a proposed away-from-reactor ISFSI, a site-specific NEPA analysis would be conducted, and that analysis would include consideration of environmental justice impacts.

Long-Term Storage. The impacts from constructing the DTS within the ISFSI protected area would be within the envelope of impacts from the construction of the away-from-reactor ISFSI. Overall human health and environmental effects of storing spent fuel during the long-term timeframe would be limited in scope and SMALL for all populations, except for aesthetics, historic and cultural resources, socioeconomic, and traffic conditions. Given the passive nature of storage operations, the short amount of time required for DTS construction and replacement

of the ISFSI and DTS and the ongoing monitoring and maintenance, minority and low-income populations are not expected to be experience disproportionately high and adverse human health and environmental impacts.

Indefinite Storage. Overall human health and environmental effects of storing spent fuel during the indefinite timeframe would be the same as those described for long-term storage, except for nonradioactive waste generation and disposal. Based on this information, minority and low-income populations are not expected to experience disproportionately high and adverse human health and environmental effects from the operation and replacement of the ISFSI and DTS.

ES.16.2.4 Air Quality

Short-Term Storage. Impacts would be SMALL to MODERATE. Construction of an away-from-reactor ISFSI would result in minimal emissions, but construction of the rail spur could produce temporary and localized impacts that would be noticeable. ISFSI operations generate minor levels of air emissions but not enough to be classified as a “major stationary source” of emissions as defined in Federal air quality regulations. Locomotives transporting spent fuel to an away-from-reactor ISFSI would emit exhaust pollutants in a distributed manner along the transport route.

Long-Term Storage. Impacts would be SMALL. Operational activities are expected to be of relatively short duration and limited in extent. The DTS is a relatively small facility, and the air quality impacts associated with construction would be less than those associated with the original construction of the ISFSI. Replacement of the DTS and ISFSI and maintenance of the rail spur would involve only a fraction of the air emissions associated with initial construction of an ISFSI. Exhaust from vehicles would not be expected to noticeably affect air quality for the region.

Indefinite Storage. Impacts would be SMALL. Indefinite storage would consist of the same short-duration and limited-extent activities and would result in the same impact magnitudes as described for long-term storage except that they would continue indefinitely into the future.

ES.16.2.5 Climate Change

Short-Term Storage. Impacts would be SMALL. Average annual greenhouse gas emissions associated with building and operating an ISFSI as well as transportation (e.g., commuters, supplies, waste materials, and spent fuel) would be equivalent to the annual emissions from about 1,640 passenger vehicles.

Long-Term Storage. Impacts would be SMALL. Construction of a DTS, replacement of dry casks and pads, and maintenance activities would likely involve only a fraction of the greenhouse gas emissions associated with the original construction of the ISFSI.

Indefinite Storage. Impacts would be SMALL. Greenhouse gas emissions would continue to be similar to long-term impacts.

ES.16.2.6 Geology and Soils

Short-Term Storage. Impacts would be SMALL. The land required to construct an ISFSI would be relatively small, and soil erosion controls would minimize impacts.

Long-Term Storage. Impacts would be SMALL. Construction of a DTS would have minimal impacts to geology and soil because of the small size of the facility. Replacement of the ISFSI pads and supporting facilities would likely occur on land near the existing facilities. The old facilities would likely be demolished, and the land would likely be reclaimed.

Indefinite Storage. Impacts would be similar to long-term storage, SMALL. Replacement of ISFSI and DTS facilities would occur on previously disturbed land and would minimize impacts to soils and geology.

ES.16.2.7 Surface-Water Quality and Use

Short-Term Storage. Impacts would be SMALL. Best management practices would be implemented during construction of an ISFSI to address stormwater flows, soil erosion, and siltation. Stormwater control measures would be required to comply with State-enforced water-quality permits. Construction and operation of an ISFSI would require very little consumptive use of water.

Long-Term Storage. Impacts would be SMALL. Given the relatively smaller size of a DTS as compared to an ISFSI, much less water would be required to build a DTS. Consumptive use and surface-water quality impacts would be no greater than those identified for initial construction of the storage facilities.

Indefinite Storage. Impacts would be SMALL. Impacts would be similar to those for long-term storage. Replacement of ISFSIs and DTS facilities once every 100 years would result in temporary and minimal impacts to surface-water quality and use.

ES.16.2.8 Groundwater Quality and Use

Short-Term Storage. Impacts would be SMALL. Methods necessary to control impacts to groundwater quality during construction and operation of an ISFSI are well understood and State-issued permits typically require the implementation of such controls. Construction and operation of an ISFSI would require very little consumptive use of water.

Long-Term Storage. Impacts would be SMALL. Impacts on groundwater from a DTS would be no larger than those considered for construction of the ISFSI. Likewise, the impacts of replacing portions of the ISFSI over time would be no more than the impacts of the initial construction of the facility, and would likely occur over a longer period of time.

Indefinite Storage. Impacts would be SMALL. Impacts would be similar to those for long-term storage. Once every 100 years, groundwater may be required when demolishing and replacing the ISFSI and DTS facilities. Consumptive use of groundwater and water-quality impacts would be minor.

ES.16.2.9 Terrestrial Resources

Short-Term Storage. Impacts would be SMALL to MODERATE. Land area permanently disturbed for construction of an away-from-reactor dry cask storage facility would be relatively small, and any impacts to wetlands would be addressed under the Clean Water Act. However, construction could have some noticeable impacts to terrestrial resources, such as habitat loss, displacement of wildlife, and incremental habitat fragmentation. ISFSI operations would have minimal impacts on terrestrial resources.

Long-Term Storage. Impacts would be SMALL. Impacts from construction of a DTS would be significantly less than those impacts expected from construction and operation of an ISFSI. Because of its relatively small construction footprint, the DTS could be sited on previously disturbed ground and away from sensitive terrestrial resources. Impacts from operational activities would be minor. Replacement activities would occur once about every 100 years, and would likely occur near existing facilities.

Indefinite Storage. Impacts would be SMALL. Replacement activities are not expected to add additional impacts beyond those impacts expected for initial construction of the away-from-reactor ISFSI and DTS. Operation of away-from reactor ISFSIs would not require any additional land use beyond that set aside for original construction of the facility.

ES.16.2.10 Aquatic Ecology

Short-Term Storage. Impacts would be SMALL. Construction and operation of an away-from-reactor ISFSI would require limited water supplies, and effluents, if any, would be limited to stormwater and treated wastewater. Impacts to aquatic resources would tend to be limited by certain factors, including the land area permanently disturbed would be relatively small; water use for the construction and operation of the site would be limited; and any impacts from discharges to water bodies would need to be addressed under the Clean Water Act, which requires licensees to obtain a National Pollutant Discharge Elimination System permit for any discharges to water bodies.

Long-Term Storage. Impacts would be SMALL. Building a DTS, and transferring, handling, and aging management of spent fuel at an away-from-reactor ISFSI could result in ground-disturbing activities that would have impacts similar to or less than impacts associated with the original construction of the ISFSI. Replacement activities would likely occur near existing facilities, and aquatic disturbances would result in relatively short-term impacts and aquatic environs would recover naturally.

Indefinite Storage. Impacts would be SMALL. Activities associated with demolishing old facilities and building replacement facilities about once every 100 years could result in minimal, short-term impacts to aquatic resources. Impacts associated with ISFSI operation and maintenance would also be small.

ES.16.2.11 Special Status Species and Habitat

Short-Term Storage. Impacts from the initial construction and ongoing operation and maintenance of dry cask storage facilities to State-listed species, marine mammals, migratory birds, and bald and golden eagles would range from minimal to noticeable, which would be similar to those described for terrestrial and aquatic resources, with any noticeable impacts resulting from the construction of the ISFSI. An away-from-reactor ISFSI could be sited to avoid adversely affecting special status species and habitat. The NRC would assess the impacts to Federally listed species and designated critical habitat from an away-from-reactor ISFSI and DTS in a site-specific review before the facility is initially constructed and afterwards if an activity meets the criteria in 50 CFR 402 for initiation or reinitiation of Section 7 consultation.

Long-Term Storage. During the long-term storage timeframe, initial construction of the DTS and replacement of the casks, pads, and the DTS would result in impacts that would be less than initial construction impacts because replacement activities would occur within the facility's operational area near existing facilities. The NRC would assess the impacts to Federally listed species and designated critical habitat from an away-from-reactor ISFSI and DTS in a site-specific review before the facility is initially constructed and afterwards if an activity meets the criteria in 50 CFR Part 402 for initiation or reinitiation of Section 7 consultation.

Indefinite Storage. Impacts to special status species and habitat from continued operation of away-from-reactor ISFSIs if a repository never becomes available would be similar to those described for the long-term storage timeframe. The same operations and maintenance activities would occur repeatedly because the spent fuel remains at the facility indefinitely. The NRC would assess the impacts to Federally listed species and designated critical habitat from an away-from-reactor ISFSI and DTS in a site-specific review before the facility is initially constructed and afterwards if an activity meets the criteria in 50 CFR Part 402 for initiation or reinitiation of Section 7 consultation.

ES.16.2.12 Historic and Cultural Resources

Short-Term Storage. Impacts would be SMALL to LARGE. Impacts to historic and cultural resources would vary depending on what resources are present, but could be minimized because (1) the land area disturbed would be relatively small, (2) site selection and placement of facilities on the site could be adjusted to minimize or

Section 106 of the National Historic Preservation Act of 1966 requires Federal agencies to take into account the effects of their undertakings on historic properties.

avoid impacts to historic and cultural resources because the facility does not depend on significant water supply and has limited electrical power needs, and (3) potential impacts could also be minimized through development of agreements, license conditions, and implementation of the licensees' historic and cultural resource management plans and procedures to protect known historic and cultural resources and address inadvertent discoveries. Additionally, should the NRC receive an application for a proposed away-from-reactor ISFSI, the NRC would conduct a site-specific assessment of potential impacts to historic and cultural resources under Section 106 of the NHPA. Impacts from continued operations and routine maintenance during the short-term timeframe would be small because no ground-disturbing activities are expected; therefore, impacts would be SMALL. In most, but not all instances, placement of storage facilities on the site can be adjusted to minimize or avoid impacts on any historic and cultural resources in the area. However, the NRC recognizes that this is not always possible. Therefore, the NRC concludes that the potential impacts on historic and cultural resources could range from SMALL to LARGE, depending on site-specific factors.

Long-Term Storage. Impacts would be SMALL to LARGE. Impacts from continued operations, routine maintenance, replacement of the facilities at an away-from-reactor ISFSI, and potential construction, operation, and replacement of a DTS would vary depending on what resources are present, proposed land disturbance, and if the licensee has management plans and procedures that are protective of historic and cultural resources. Additionally, the construction of a DTS and replacement of an ISFSI and the DTS would be Federal actions that would require the NRC to conduct a site-specific assessment of potential impacts to historical and cultural resources under Section 106 of NHPA. The NRC assumes that the replacement of the ISFSI and DTS would be constructed on land near the existing facilities. The NRC recognizes that there is uncertainty associated with the degree of prior disturbance and the resources, if any, are present in areas where future ground-disturbing activities could occur. The NRC cannot eliminate the possibility that historic and cultural resources would be affected by construction activities because the initial ISFSI could be located within a less-disturbed area with historic and cultural resources in close proximity. Further, resources may be present after initial construction of the away-from-reactor ISFSI that would not have been considered significant at the time the initial or replacement facilities were constructed, but could become significant in the future. This range takes into consideration routine maintenance and monitoring (i.e., no ground-disturbing activities), the absence or avoidance of historic and cultural resources, and potential ground-disturbing activities that impact historic and cultural resources. The analysis also considers uncertainties inherent in analyzing this resource over long timeframes. These uncertainties include any future discovery of previously unknown historic and cultural resources; resources that gain significance within the vicinity and the viewshed (e.g., nomination of a historic district) due to improvements in knowledge, technology, and excavation techniques; and changes associated with predicting resources that would be significant to future generations. If construction of a DTS and replacement of the ISFSI and DTS occurs in an area with no historic or cultural resource present or construction occurs in previously a disturbed area that allows

avoidance of historic and cultural resources then impacts would be SMALL. By contrast, a MODERATE or LARGE impact could result if historic and cultural resources are present at a site and, because they cannot be avoided, are impacted by ground-disturbing activities during the long-term timeframe.

Indefinite Storage. Impacts would be SMALL to LARGE. Impacts would be similar to those described for the long-term storage timeframe. The NRC assumes that the replacement of the ISFSI and DTS would be constructed on land near the existing facilities. As stated in Section 1.8, the NRC assumes that the land where the original facilities were constructed will be available for replacement facility construction; however, the NRC cannot eliminate the possibility that historic and cultural resources will be affected by construction activities during the indefinite timeframe because there is uncertainty associated with the degree of prior disturbance and what resources, if any, are present in areas where future ground-disturbing activities (e.g., initial and replacement DTS and replacement ISFSI) could occur. Further, significant resources may be present that were not considered significant at the time the initial or replacement facilities were constructed. Potential impacts to historic and cultural resources during the indefinite storage timeframe would range from SMALL to LARGE. This range takes into consideration routine maintenance and monitoring (i.e., no ground-disturbing activities), the absence or avoidance of historic and cultural resources, and potential ground-disturbing activities that could impact historic and cultural resources. The analysis also considers uncertainties inherent in analyzing this resource area over long timeframes. These uncertainties include any future discovery of previously unknown historic and cultural resources; resources that gain significance within the vicinity and the viewshed (e.g., nomination of a historic district) due to improvements in knowledge, technology, and excavation techniques; and changes associated with predicting resources that future generations would consider significant. If construction of a DTS and replacement of the ISFSI and DTS occurs in an area with no historic or cultural resource present or construction occurs in previously a disturbed area that allows avoidance of historic and cultural resources then impacts would be SMALL. By contrast, a MODERATE or LARGE impact could result if historic and cultural resources are present at a site and, because they cannot be avoided, are impacted by ground-disturbing activities during the indefinite timeframe.

ES.16.2.13 Noise

Short-Term Storage. Impacts would be SMALL. Noise impacts for an away-from-reactor ISFSI could exceed EPA-recommended levels during some portions of construction and operation; however, noise impacts would be short in duration and intermittent.

Long-Term Storage. Impacts would be SMALL. Noise impacts from continued operation and routine maintenance of an away-from-reactor ISFSI would be minimal. Impacts from construction of a DTS and replacement of the DTS and ISFSI would be similar to those for initial construction of an ISFSI. These construction and replacement activities would be intermittent and short in duration, and noticeable noise levels would be limited to the nearest receptors.

Indefinite Storage. Impacts would be SMALL. Impacts would be similar to those associated with the long-term storage timeframe. Ongoing operation, maintenance, and replacement activities would have minimal noise impacts.

ES.16.2.14 Aesthetics

Short-Term Storage. Impacts would be SMALL to MODERATE. Potential impacts to aesthetic resources would include visibility of facility buildings, dry storage pads and canisters, and the rail line and trains from across scenic water bodies, roadways, or from higher elevations. Lighting of the facility would increase visibility. If constructed in an area with no prior industrial development, the ISFSI could impact the local viewshed, and scenic appeal of the site would be noticeably changed when viewed from various locations. Impacts could be minimal if the ISFSI is built in a previously disturbed area.

Long-Term Storage. Impacts would be SMALL to MODERATE. Aesthetic impacts from transferring and handling spent fuel and aging management activities at an away-from-reactor ISFSI are anticipated to be similar to the impacts for initial construction and short-term operation of the ISFSI. Periodic construction, demolition, and operation activities required for aging management would not significantly alter the pre-existing impacts on aesthetic resources.

Indefinite Storage. Impacts would be SMALL to MODERATE. The same operations and maintenance activities that are described for the long-term storage timeframe occur repeatedly because the spent fuel remains at the facility indefinitely.

ES.16.2.15 Waste Management

Short-Term Storage. Impacts would be SMALL. Construction activities would generate excavation and construction debris, vegetation debris, and backfill. Operation of an away-from-reactor ISFSI would involve limited waste generating activities. Small quantities of LLW may be generated during routine operation and maintenance. Little to no mixed waste generation would be expected. Small quantities of nonradioactive waste would be generated. All wastes would be managed and disposed of according to regulatory requirements.

Long-Term Storage. Impacts would be SMALL. Routine maintenance would generate minimal quantities of waste. Construction and operation of a DTS and replacement of ISFSI and DTS facilities at an away-from-reactor ISFSI would generate LLW and nonradioactive waste. Although the exact amount of LLW and nonradioactive waste depends on the level of contamination, the quantity of LLW generated from the replacement of the ISFSI and DTS is expected to be comparable to the LLW generated during reactor decommissioning, which was determined to have a SMALL impact in the License Renewal GEIS. Although a large amount of nonradioactive waste would be generated by replacement of the ISFSI and DTS, it would not likely have a noticeable impact on total nonradioactive waste disposal capacity.

Indefinite Storage. Impacts would be SMALL to MODERATE. LLW, mixed waste, and nonradioactive waste would continue to be generated indefinitely, and there could be noticeable impacts on the local and regional landfill capacity for nonradioactive waste disposal.

ES.16.2.16 Transportation

Short-Term Storage. Impacts would be SMALL to MODERATE. The environmental impacts of transportation include impacts to regional traffic from commuting workers, supply shipments, shipments of spent fuel to the ISFSI, and shipments of nonradioactive and radiological waste. Impacts to traffic from workers commuting to and from the away-from-reactor storage site depend on the size of the workforce, the capacity of the local road network, traffic patterns, and the availability of alternative commuting routes to and from the facility. The majority of impacts would be associated with the traffic during the initial construction of the ISFSI. Shipment of spent fuel from nuclear power plants to the ISFSI would be required to comply with NRC and the U.S. Department of Transportation regulations. Radiological impacts to the public and workers from spent fuel shipments from a reactor have previously been evaluated by the NRC (in Table S–4 of 10 CFR 51.52) and were found to be small.

Table S–4 in 10 CFR 51.52 summarizes the environmental impacts of transportation of fuel and waste to and from a nuclear power plant. Data supporting the determinations in Table S–4 is contained in the NRC's *Environmental Survey of Transportation of Radioactive Materials to and from Nuclear Power Plants*, WASH–1238, December 1972, and Supp. 1 NUREG–75/038, April 1975.

Long-Term Storage. Impacts would be SMALL to MODERATE. Construction of a DTS would require a smaller workforce than the initial construction of the ISFSI, so transportation impacts from workers commuting would be less, but may still be noticeable. Shipments of LLW generated by maintenance and replacement activities would be regulated by NRC and Department of Transportation requirements and impacts to traffic and to public and worker radiological and nonradiological safety would be minimal.

Indefinite Storage. Impacts would be SMALL to MODERATE. Annual transportation activities and associated environmental impacts would be similar to that analyzed for the long-term storage timeframe.

ES.16.2.17 Public and Occupational Health

Short-Term Storage. Impacts would be SMALL. Nonradiological health impacts from the construction of an away-from-reactor ISFSI include normal hazards associated with construction, such as pollutants (e.g., dust), and fatal and nonfatal occupational injuries (e.g., falls and overexertion). Impacts would be minor and similar to an industrial facility of similar size. Public and occupation radiological doses would be maintained significantly below the

dose limits established by 10 CFR Part 72 and 10 CFR Part 20. Licensed facilities would also be required by those regulations to maintain an ALARA program, which would likely reduce the doses even further.

Long-Term Storage. Impacts would be SMALL. Nonradiological health impacts associated with replacement activities would be similar those for the original construction of the facility, although replacement activities would take place over a longer period of time. Public and occupational radiological doses would be maintained significantly below the dose limits established by 10 CFR Part 72 and 10 CFR Part 20. In addition, the dry cask storage facility would be required to maintain an ALARA program that would likely further reduce radiological doses. Operation of the DTS would involve increased doses to works and a very small increase in dose levels at the site boundary; however, the licensee would still be required to comply with regulations limiting dose.

Indefinite Storage. Impacts would be SMALL. For the indefinite storage timeframe, the types of activities (construction, operation, and replacement) and associated health impacts would remain the same as those for the long-term storage timeframe.

ES.16.2.18 Environmental Impacts of Postulated Accidents

Impacts would be SMALL. Consideration of accidents at an away-from-reactor ISFSI for all three storage timeframes is similar to those for at-reactor ISFSIs (described in Chapter 4). The postulated accident analysis in the GEIS is applicable for all three timeframes (short-term, long-term, and indefinite). The NRC regulations in 10 CFR Part 72 require that structures, systems, and components important to safety will be designed to withstand the effects of natural phenomena (such as earthquakes, tornadoes, and hurricanes) and human-induced events without loss of capability to perform those safety functions. The NRC siting regulations also require applicants to take into consideration, among other things, physical characteristics of sites that are necessary for the safety analysis or that may have an impact on plant design (such as the design basis earthquake). All these factors are considered in determining the acceptability of the site and design criteria of a proposed dry cask storage facility. The GEIS analysis considered an accident scenario in which wind-borne missiles damage the concrete overpack of a dry cask. This accident would result in only slightly higher occupational doses and only negligible increases in radiological doses at the boundary of the site. The analysis also considered an accident resulting in a dry cask leaking, and determined that radiological doses would still be below the limits in 10 CFR Part 20 and 10 CFR Part 72.

ES.16.2.19 Potential Acts of Sabotage or Terrorism

The consideration of acts of sabotage or terrorism at an away-from-reactor ISFSI for all three storage timeframes are similar to those for at-reactor ISFSIs (described in Chapter 4). The

probability and consequences of a successful attack on an away-from-reactor ISFSI or DTS are low; therefore, the environmental risk is SMALL.

Table ES-4. Summary of Environmental Impacts of Away-From-Reactor Spent Fuel Storage

Resource Area	Short-Term Storage	Long-Term Storage	Indefinite Storage
Land Use	SMALL	SMALL	SMALL
Socioeconomics	SMALL (adverse) to LARGE (beneficial)	SMALL (adverse) to LARGE (beneficial)	SMALL (adverse) to LARGE (beneficial)
Environmental Justice	Disproportionately high and adverse impacts are not expected.		
Air Quality	SMALL to MODERATE	SMALL	SMALL
Climate Change	SMALL	SMALL	SMALL
Geology and Soils	SMALL	SMALL	SMALL
Surface-Water Quality and Use	SMALL	SMALL	SMALL
Groundwater Quality and Use	SMALL	SMALL	SMALL
Terrestrial Resources	SMALL to MODERATE	SMALL	SMALL
Aquatic Ecology	SMALL	SMALL	SMALL
Special Status Species and Habitat	Impacts for Federally listed threatened and endangered species and Essential Fish Habitat would be determined as part of the consultations for the ESA and the Magnuson–Stevens Fishery Conservation and Management Act.		
Historic and Cultural Resources	SMALL to LARGE	SMALL to LARGE	SMALL to LARGE
Noise	SMALL	SMALL	SMALL
Aesthetics	SMALL to MODERATE	SMALL to MODERATE	SMALL to MODERATE
Waste Management			
Low-Level Waste	SMALL	SMALL	SMALL
Mixed Waste	SMALL	SMALL	SMALL
Nonradioactive Waste	SMALL	SMALL	SMALL to MODERATE
Transportation			
Traffic	SMALL to MODERATE	SMALL to MODERATE	SMALL to MODERATE
Health	SMALL	SMALL	SMALL
Public and Occupational Health	SMALL	SMALL	SMALL
Accidents	SMALL	SMALL	SMALL
Sabotage or Terrorism	SMALL	SMALL	SMALL

ES.17 Did the NRC Look at Cumulative Impacts?

Cumulative impacts result when the effects of an action are added to or interact with other effects in a particular place and within a particular time.

In Chapter 6, the NRC examined the incremental impact of continued storage on each resource area in combination with other past, present, and reasonably foreseeable actions. The introductory sections of Chapter 6 discuss the NRC's methodology for assessing cumulative impacts, including the spatial and temporal bounds on which the NRC based its analyses, and provide a table that describes national, regional, and local trends that informed the NRC's consideration of reasonably foreseeable future actions. Trends that the NRC examined include increased energy demand, continued use of radiological materials, increased water demand, population growth and demographic shifts, increased urbanization, transportation, and other activities and environmental stressors. The spatial boundaries for the cumulative impact assessment are unique to each resource area and defined in resource-specific analyses in Section 6.4. Each geographic area of analysis includes the area surrounding a single continued storage site and extends to where the resource would be affected by continued storage and could have overlapping impacts with other past, present, and reasonably foreseeable future actions. The temporal boundary for the cumulative effects analysis includes activities that could occur through decommissioning of at-reactor or away-from-reactor storage facilities.

Table ES-5 provides a summary of the determinations made in Chapter 6. The second and third columns list resource impact determinations made in Chapters 4 and 5. These impacts are combined with the past, present, and reasonably foreseeable actions discussed in Chapter 6. The last column lists the cumulative impacts to resource areas. Discussions about impact differences resulting from cumulative effects can be found in Chapter 6.

Table ES-5. Summary of Cumulative Impacts for Continued Storage of Spent Fuel

Resource Area	Incremental Impact from At-Reactor Storage	Incremental Impact from Away-from-Reactor Storage	Cumulative Impact from Continued Storage and Other Federal and Non-Federal Activities
Land Use	SMALL	SMALL	SMALL to MODERATE
Socioeconomics	SMALL	SMALL (adverse) to LARGE (beneficial)	SMALL to LARGE
Environmental Justice	Disproportionately high and adverse impacts are not expected		
Air Quality	SMALL	SMALL to MODERATE	SMALL to MODERATE
Climate Change	SMALL	SMALL	MODERATE
Geology and Soils	SMALL	SMALL	SMALL to MODERATE
Surface-Water Quality and Use	SMALL	SMALL	SMALL to LARGE

Table ES-5. Summary of Cumulative Impacts for Continued Storage of Spent Fuel (cont'd)

Resource Area	Incremental Impact from At-Reactor Storage	Incremental Impact from Away-from-Reactor Storage	Cumulative Impact from Continued Storage and Other Federal and Non-Federal Activities
Groundwater Quality and Use	SMALL	SMALL	SMALL to LARGE
Terrestrial Resources[(a)]	SMALL	SMALL to MODERATE	SMALL to MODERATE
Aquatic Ecology[(a)]	SMALL	SMALL	SMALL to LARGE
Historic and Cultural Resources	SMALL to LARGE	SMALL to LARGE	SMALL to LARGE
Noise	SMALL	SMALL	SMALL to MODERATE
Aesthetics	SMALL	SMALL to MODERATE	SMALL to MODERATE
Waste Management	SMALL to MODERATE	SMALL to MODERATE	SMALL to LARGE
Transportation	SMALL	SMALL to MODERATE	SMALL to MODERATE
Public and Occupational Health	SMALL	SMALL	SMALL
Accidents	SMALL	SMALL	SMALL

(a) Cumulative impacts to Federally listed threatened and endangered species and Essential Fish Habitat would be determined as part of consultations for the ESA and the Magnuson–Stevens Fishery Conservation and Management Act.

ES.18 What is the Purpose of Chapter 8 of the GEIS?

Chapter 8 provides a summary of the environmental impacts and consequences of continued at-reactor and away-from-reactor storage. In addition, Chapter 8 addresses the following NEPA elements for use in future site-specific environmental reviews: (1) unavoidable adverse environmental impacts of continued storage; (2) irreversible and irretrievable resource commitments of continue storage; and (3) the relationship between short-term uses of the environment and the maintenance and enhancement of long-term productivity.

ES.18.1 What are the Unavoidable Adverse Impacts of Continued Storage?

Unavoidable adverse environmental impacts are those potential impacts of continued storage that cannot be avoided because of constraints inherent in using at-reactor and away-from-reactor spent fuel storage facilities for continued storage. The unavoidable adverse environmental impacts associated with continued storage would include impacts of (1) short-term storage in a spent fuel pool, as well as (2) short-term storage, (3) long-term storage, and (4) indefinite storage in at-reactor and away-from-reactor ISFSIs. These impacts are summarized in Table ES-3 and Table ES-4.

ES.18.2 What are the Irreversible and Irretrievable Resource Commitments of Continued Storage?

An irreversible resource commitment is a commitment of environmental resources—to a particular action—that cannot be restored. An irretrievable commitment of resources refers to a commitment of material resources that, once used, cannot be recycled or restored for other uses by practical means. Impacts on land use, terrestrial ecology, aquatic ecology, aesthetics, historic and cultural resources, and waste management would all result in irreversible commitments of resources. Replacement of ISFSI components and transportation would result in irretrievable commitments.

ES.18.3 What is the Relationship between Short-Term Uses of the Environment and the Maintenance and Enhancement of Long-Term Productivity?

The NRC recognizes the relationship between local short-term uses of the environment and the maintenance and enhancement of long-term productivity that occurs from continued storage, which may be authorized by future licensing actions. The local short-term use of the human environment is summarized in terms of the unavoidable adverse environmental impacts and irreversible and irretrievable commitments of resources. The long-term productivity period is the time period beyond continued storage.

Decisions regarding dismantlement and decommissioning affect this relationship. The maximum long-term impact on productivity would result when an at-reactor or away-from-reactor ISFSI is not immediately dismantled at the end of storage operations, or, as with the indefinite storage timeframe, it remains in operation indefinitely. Consequently, the land occupied by an ISFSI would not be available for any other uses. By contrast, when site decommissioning is complete, and an NRC license is terminated, a site would be available for other uses.

Other potential long-term impacts on productivity include the commitment of land and consumption of disposal capacity necessary to meet waste disposal needs. In addition, because loss of historic and cultural resources would constitute irreversible impacts, any loss of historic and cultural resources during continued storage would persist as long-term impacts. A small contribution to greenhouse gas emissions would add to the atmospheric burden of emissions that could contribute to potential long-term impacts.

ES.19 How did the NRC Address Spent Fuel Pool Fires and Leaks?

The NRC assessed the environmental impacts of spent fuel pool fires and leaks as part of the analysis in the GEIS. Appendix E describes the environmental impacts of spent fuel pool leaks during the short-term storage timeframe, and Appendix F describes the environmental impacts of a spent fuel pool fire during the short-term storage timeframe. In the GEIS, the NRC assumes that all spent fuel being stored in spent fuel pools will be transferred to dry casks by the end of the 60-year (short-term) storage timeframe.

ES.19.1 Spent Fuel Pool Leaks

A variety of factors work together to make it unlikely that a spent fuel pool leak would result in noticeable offsite environmental impacts during continued storage. These include the combination of spent fuel pool design and maintenance, operational and regulatory practices (e.g., leakage monitoring, NRC oversight, and groundwater monitoring), site hydrogeologic characteristics, and radionuclide transport properties.

Tritium is a radioactive isotope of hydrogen. Water containing tritium is normally released from nuclear power plants under controlled, monitored conditions that the NRC mandates to protect public health and safety. The NRC evaluates abnormal releases of tritium-contaminated water. More information about tritium from nuclear power plants can be found at http://www.nrc.gov/reading-rm/doc-collections/fact-sheets/tritium-radiation-fs.html.

For impacts to groundwater resources, though unlikely, it is possible that a leak of sufficient quantity and duration could occur, resulting in noticeable, but not destabilizing impacts to groundwater resources. The factors that could lead to a significant leak are many and varied. These factors include the magnitude and duration of the leak, the radiological constituents of the leak, the hydrologic conditions of the site, and the distance to the offsite groundwater resource. All these factors, in addition to the assessment of past leaks and the promulgation of regulations requiring subsurface surveys to determine the presence and extent of subsurface contamination, leads NRC to conclude that the environmental impacts of a spent fuel pool leak during continued storage would be SMALL.

Public health concerns would be related to groundwater contamination and would be limited to private wells nearest the site. In the event of uncontrolled and undetected discharges associated with long-term spent fuel pool leaks to nearby surface waters, the annual discharge would be comparable to normal discharges associated with operating reactors, and would likely remain below limits in 10 CFR Part 50, Appendix I. If, in the unlikely event that a pool leak remained undetected for a long period of time, public health regulatory limits (i.e., EPA drinking water standards) could potentially be exceeded, and the public health impacts could be noticeable, but not destabilizing. However, it is unlikely that a leak of sufficient quantity and

duration could occur without detection, or that a leak would not be impeded by the inherent hydrologic characteristics typical at spent fuel pool locations. Therefore, based on the low probability that a long-duration leak exceeding effluent limits would go undetected and affect offsite groundwater sources to the extent that a public health limit would be exceeded, the NRC concludes that impacts during the short-term storage timeframe would be SMALL.

ES.19.2 Spent Fuel Pool Fires

The spent fuel pool fire environmental impacts described in Appendix F are based upon a summary of spent fuel pool fire risk studies the NRC has completed since 1975. While most of the earlier studies were concerned with spent fuel pool fire risk during the operating life of a reactor, the *Technical Study of Spent Fuel Pool Accident Risk at Decommissioning Nuclear Power Plants* (NUREG–1738), completed in 2001, examined the risk of spent fuel pool fires during the reactor decommissioning period, which is the same storage timeframe of continued storage of spent fuel on which this GEIS is focused. The GEIS assumes that all fuel will be removed from the spent fuel pool by the end of the 60-year decommissioning period, which corresponds to the end of the short-term timeframe.

> The NRC's determination of SMALL for the environmental impacts of a spent fuel fire is based on a **probability-weighted consequence**. This means that the risk of a spent fuel fire informed the impact determination of SMALL.
>
> The risk of a spent fuel fire is low because even though the consequences would be high, the probability is extremely low.

The conservative estimates used to assess spent fuel pool fire accidents, based on the NRC's previous analyses, result in probability-weighted population doses and economic consequences that are comparable to the values calculated for a severe reactor accident, as estimated in the 1996 and 2013 License Renewal GEIS. Furthermore, mitigation measures implemented by licensees as a result of NRC Orders and regulations have further lowered the risk of this class of accidents. As a result, the NRC finds that the environmental impacts from spent fuel pool fires are SMALL during the short-term timeframe.

ES.20 Does the GEIS Address Costs?

Chapter 7 of the GEIS analyzes and compares the benefits and costs associated with the proposed action (adopting a revised 10 CFR 51.23) and the NRC's options in the case of no action (site-specific review, GEIS-only, and policy statement). The no-action options do not alter the environmental impacts of continued storage that the NRC addresses in Chapters 4, 5, and 6. Instead, the options considered provide different administrative approaches that the NRC could apply to future licensing reviews to satisfy the agency's responsibility to consider the potential environmental impacts of continued storage in deciding whether to issue certain new and renewed licenses. Section 7.1 includes assumptions about financial costs and current and

future licensing reviews that are the bases for the cost analysis, while the NRC addresses unquantified costs and benefits throughout Chapter 7.

Section 7.6 summarizes and compares the estimated costs and benefits of the proposed action and the potential options in the case of no action. The cost for the proposed action (adopting a revised 10 CFR 51.23) is significantly lower than the cost for any of the no-action options. This occurs primarily because the NRC does not undertake site-specific reviews of the continued storage issue in the course of individual licensing proceedings as part of the proposed action. In general, the potential options in the case of no action are more costly than the proposed action.

The NRC provides cost information about continued storage facilities and activities in Chapter 2 in response to a large number of public comments on the draft GEIS that requested this information.

ES.21 What is the NRC's Recommendation?

Section 7.7 of the GEIS provides NRC's recommendation that the proposed action is the preferred alternative. The NRC recommendation is based on (1) the NRC's analysis of the cost-benefit balance of the proposed action and the options in the case of no action as presented in Chapter 7; (2) the NRC's consideration of public-scoping and draft GEIS comments in the development of the final GEIS; (3) the lack of environmental impacts associated with either the proposed action or the NRC's options in the case of no action; and (4) the determination that the environmental impacts of continued storage analyzed in the GEIS are unaffected by the NRC's choice of a particular administrative approach for considering the environmental impacts of continued storage in NRC licensing processes.

> The NRC recommendation is to select the proposed action—adopting a revision to 10 CFR 51.23 that codifies the impact determinations from the GEIS—as the preferred alternative.

ES.22 How is the GEIS Related to the Rule?

This GEIS provides a regulatory basis for the NRC's revised Rule, 10 CFR 51.23. Appendix B of the GEIS contains detailed information about the previous Waste Confidence proceedings, and addresses two relevant topics from Waste Confidence proceedings: (1) the technical feasibility of continued safe storage and (2) repository availability. NRC's conclusions regarding these topics continue to undergird the agency's environmental analysis.

ES.23 Are There Any Areas of Controversy in the GEIS?

There were two areas of controversy raised in the Court of Appeals' remand of the 2010 Waste Confidence Rule. These areas of controversy are described below.

1. The NRC has included detailed analyses of spent fuel pool leaks and spent fuel pool fires. Historically, the NRC has devoted considerable attention to these topics, and there has been intense public interest in these issues, as evidenced by comments received during the litigation on the 2010 Waste Confidence update, during the scoping period, and during the comment period on the draft GEIS and proposed Rule. The NRC therefore prepared separate appendices to provide additional detail regarding the studies and analyses that underlie the analyses of spent fuel pool fires and leaks.
2. The NRC has included indefinite storage as one of the three timeframes analyzed in this GEIS. The NRC has devoted considerable attention to this timeframe in response to the intense public interest in this issue, as evidenced by comments received during the litigation on the 2010 Waste Confidence update, during the scoping period, and during the comment period on the draft GEIS and proposed Rule. Although the NRC believes it is likely that a repository will be available by 60 years after the end of a reactor's licensed life for operation, it recognizes that the availability of a repository is a controversial issue and has included an analysis of indefinite storage in the GEIS.

ES.24 Are There Any Remaining Issues to be Resolved?

For the purposes of successfully completing the GEIS while meeting NEPA requirements, the NRC believes there are numerous sources of the requisite technical data and information available; therefore, there are no remaining issues that require resolution. In the reference section of each chapter, the NRC has listed technical documents and reports on pertinent issues that are used to support the analyses in the GEIS. The NRC relied on accurate and high-quality information to ensure the GEIS contains a thorough and rigorous environmental impact analysis. The NRC will continue to review health and environmental effects of spent fuel storage as part of its ongoing licensing, oversight, and research activities. Any new information, such as the performance of spent fuel during lengthy periods of time, will be used to update and improve the NRC's regulatory requirements as appropriate.

ES.25 How Can I Obtain a Copy of the GEIS and Rule?

The final GEIS can be accessed online at http://www.nrc.gov/reading-rm/doc-collections/nuregs/staff/ or in ADAMS under Accession No. ML14198A440. The draft GEIS can be accessed in ADAMS at ML13224A106. The final Rule will be published in the *Federal Register* and at www.regulations.gov.

Abbreviations/Acronyms

ACHP	Advisory Council on Historic Preservation
ADAMS	Agencywide Documents Access and Management System
AEA	Atomic Energy Act
AEC	U.S. Atomic Energy Commission
ALARA	as low as is reasonably achievable
ANDRA	French National Agency for Radioactive Waste Management
ANS	American Nuclear Society
ANSI	American National Standards Institute
APA	Administrative Procedure Act
APS	American Physical Society
ASLBP	Atomic Safety and Licensing Board Panel
ASME	American Society of Mechanical Engineers
ATRI	American Transportation Research Institute
B	billion
BEIR	biological effects of ionizing radiation
BLS	Bureau of Labor Statistics
BMP	best management practice
BWR	boiling water reactor
CEDE	committed effective dose equivalent
CEQ	Council on Environmental Quality
CFR	*Code of Federal Regulations*
CNWRA	Center for Nuclear Waste Regulatory Analyses
CO_2	carbon dioxide
CoC	certificate of compliance
COL	combined license
CPB	U.S. Customs and Border Protection
CPI	Consumer Price Index
D.C.	District of Columbia
dBA	decibel(s) (acoustic)
DBT	design basis threat
DBTT	ductile-to-brittle transition temperature

DEC	Department of Environmental Conservation
DOE	U.S. Department of Energy
DOT	U.S. Department of Transportation
DTS	dry transfer system
EA	Environmental Assessment
EFH	essential fish habitat
EIS	environmental impact statement
EMF	electromagnetic field
EPA	U.S. Environmental Protection Agency
EPRI	Electric Power Research Institute
ESA	Endangered Species Act of 1973, as amended
ESP	early site permit
FEIS	final environmental impact statement
FONSI	finding of no significant impact
FR	*Federal Register*
FSAR	Final Safety Analysis Report
FTE	full-time equivalent
FWS	U.S. Fish and Wildlife Service
GAO	Government Accountability Office
GCRP	U.S. Global Change Research Program
GEH	General Electric-Hitachi
GEIS	Generic Environmental Impact Statement
GHG	greenhouse gases
GTCC	greater than class C
HLW	high-level waste
HOSS	hardened onsite storage
HSM	horizontal storage modules
IAEA	International Atomic Energy Agency
INL	Idaho National Laboratory
iPWR	integral pressurized water reactor
ISFSI	independent spent fuel storage installation
LLW	low-level waste
LWR	light water reactor

M	million
MACCS	MELCOR Accident Consequence Code System
MCL	maximum contaminant level
MEI	maximally exposed individual
MOX	mixed oxide
MTU	metric tons of uranium
NA	not applicable
NAAQS	National Ambient Air Quality Standards
NAS	National Academy of Sciences
NEI	Nuclear Energy Institute
NEPA	National Environmental Policy Act of 1969, as amended
NHPA	National Historic Preservation Act of 1966, as amended
NMFS	National Marine Fisheries Services
NMSS	Office of Nuclear Material Safety and Safeguards
NPDES	National Pollutant Discharge Elimination System
NRC	U.S. Nuclear Regulatory Commission
NRDC	Natural Resources Defense Council
NRHP	National Register of Historic Places
NWPA	Nuclear Waste Policy Act
OMB	Office of Management and Budget
OSHA	Occupational Safety and Health Administration
PAG	protective action guide
PFS	Private Fuel Storage, LLC
PFSF	Private Fuel Storage Facility
PM	particulate matter
PM_{10}	particulate matter with a diameter of 10 microns or less
$PM_{2.5}$	particulate matter with a diameter of 2.5 microns or less
PRA	probabilistic risk assessment
PWR	pressurized water reactors
QA	quality assurance
RCRA	Resource Conservation and Recovery Act of 1976, as amended
REMP	radiological environmental monitoring program

SAMA	severe accident mitigation alternatives
SKB	Swedish Nuclear Fuel and Waste Management Company
SMR	small modular reactor
SOC	Statement of Considerations
TEDE	total effective dose equivalent
TMI-2	Three Mile Island Unit 2
TN	Transnuclear Inc.
TRU	transuranic (waste)
TVA	Tennessee Valley Authority
USACE	U.S. Army Corps of Engineers
USC	United States Code
USCB	U.S. Census Bureau
WIPP	Waste Isolation Pilot Plant

Units of Measure

Metric Prefixes

tera (T-)	10^{12}
giga (G-)	10^{9}
mega (M-)	10^{6}
kilo (k-)	10^{3}
hecto (h-)	10^{2}
deci (d-)	10^{-1}
centi (c-)	10^{-2}
milli (m-)	10^{-3}
mirco (µ-)	10^{-6}
nano (n-)	10^{-9}
pico (p-)	10^{-12}

Radiological Units

µCi/ml	microcurie(s) per milliliter
Bq	becquerel(s)
Ci	curie(s)
Ci/L	curies per liter
Ci/yr	curie(s) per year
mrem	millirem
mSv	millisievert(s)
pCi	picocurie(s)
pCi/L	picocurie(s) per liter
R	roentgen
rad	special unit of absorbed dose
rem	roentgen equivalent man (a special unit of radiation dose)
S	siemens
Sv	sievert

Length/Distance

cm	centimeter(s)
ft	foot or feet
in.	inch(es)
km	kilometer(s)
m	meter(s)
mi	mile(s)
mm	millimeter(s)
yd	yard(s)

Volume

m^3	cubic meter(s)
yd^3	cubic yard(s)
ft^3	cubic foot(feet)
L	liter(s)
gal	gallon(s)
gpd	gallon(s) per day
gpm	gallon(s) per minute
oz	ounce(s)

Area

ha	hectare(s)
ac	acre(s)
ft^2	square foot(feet)
mi^2	square mile(s)
m^2	square meter(s)

Units of Time

hr	hour(s)
mo	month
s	second(s)
yr	year(s)
min	minute
Ryr	reactor year(s)

Units of Measure

Units of Temperature

°C	degree(s) Celsius
°F	degree(s) Fahrenheit

Units of Concentration

ppm	parts per million
ppt	parts per thousand

Units of Speed

mph	mile(s) per hour

Units of Weight

MT	metric ton(s) (or tonne[s])
MTU	metric ton(s) of uranium
T	ton(s)

Units of Power

Btu	British thermal unit(s)
GWd	gigawatt-day(s)
MW	megawatt(s)
MW(e)	megawatt(s) electrical
Ci/L	curies per liter
L/d	liter(s) per day
L/min	liter(s) per minute
ml or mL	milliliter(s)

1.0 Introduction

Since the inception of commercial nuclear power, the United States has worked to find a disposal solution for spent nuclear fuel (spent fuel) generated by commercial nuclear power reactors. In the late 1970s, the U.S. Nuclear Regulatory Commission (NRC) reexamined an underlying assumption used in licensing reactors to that time—*that a repository could be secured for the ultimate disposal of spent fuel generated by nuclear reactors, and that spent fuel could be safely stored in the interim*. This analysis was called the Waste Confidence proceeding.

This *Generic Environmental Impact Statement for Continued Storage of Spent Nuclear Fuel* (GEIS) addresses the environmental impacts of continuing to store spent fuel at a reactor site or at an away-from-reactor storage facility, after the end of the licensed life for operations of a reactor[1] until final disposition in a geologic repository ("continued storage"), historically addressed as part of the NRC's waste confidence proceeding. This GEIS has been prepared to fulfill the Commission's obligations under the National Environmental Policy Act of 1969, as amended (NEPA) and NRC regulations implementing NEPA in Title 10 of the *Code of Federal Regulations* (CFR) Part 51.

1.1 History of Waste Confidence

The first Waste Confidence rulemaking began in the late 1970s in response to two significant legal proceedings. In 1977, the Commission denied a petition for rulemaking filed by the Natural Resources Defense Council (NRDC) that asked the NRC to determine whether radioactive wastes generated in nuclear power reactors can be disposed of without undue risk to public health and safety and to refrain from granting pending or future requests for reactor operating licenses until the NRC made a determination regarding disposal. The Commission stated in its denial that, as a matter of policy, it "... would not continue to license reactors if it did not have reasonable confidence that the wastes can and will in due course be disposed of safely" (42 FR 34391). The Commission's denial of the NRDC petition was affirmed upon judicial review (*NRDC v. NRC*). Since that time, the Federal government has adopted deep geologic disposal as the national solution for spent fuel disposal (Nuclear Waste Policy Act of 1982). Recently, the U.S. Department of Energy (DOE) reaffirmed the Federal government's commitment to the ultimate disposal of spent fuel and predicted that a repository would be available by 2048 (DOE 2013).

[1] As used in the GEIS, the term "licensed life for operation" of a reactor is the period running to the end of the operating license term for a reactor, which may include the term of a revised or renewed license.

At about the same time the Commission denied the NRDC petition, the State of Minnesota and the New England Coalition on Nuclear Pollution challenged license amendments that permitted expansion of the capacity of spent fuel storage pools at two nuclear power plants, Vermont Yankee and Prairie Island. In 1979, the Court of Appeals for the District of Columbia (D.C.) Circuit, in *Minnesota v. NRC*, remanded to the Commission the question of whether an offsite storage or disposal solution would be available for the spent fuel at the two facilities at the expiration of their licenses—at that time scheduled for 2007 and 2009—and, if not, whether the spent fuel could be stored safely at those reactor sites until an offsite solution was available.

In 1979, the NRC initiated a generic rulemaking that stemmed from these challenges and the Court of Appeals' remand in *Minnesota v. NRC*. The Waste Confidence rulemaking generically assessed whether the Commission could have reasonable assurance that spent fuel produced by nuclear power plants "…can be safely disposed of…when such disposal or offsite storage will be available, and…whether radioactive wastes can be safely stored onsite past the expiration of existing facility licenses until offsite disposal or storage is available" (44 FR 61372). On August 31, 1984, the Commission published the Waste Confidence decision (49 FR 34658) (Decision) and a final Rule (49 FR 34688), which codified elements of the decision at 10 CFR 51.23 (Rule) and adopted revisions to 10 CFR Part 50 that established procedures to "…confirm that there will be adequate lead time for whatever actions may be needed at individual reactor sites to assure that the management of spent fuel following the expiration of the reactor operating license will be accomplished in a safe and environmentally acceptable manner" (49 FR 34689). In addition to addressing the NRC's assessment of the issues presented by the Court of Appeals' remand, the Decision provided an environmental assessment (EA) and finding of no significant impact (FONSI) to support the Rule (NRC 1989).

The analysis in 10 CFR 51.23 found that, for at least 30 years beyond the expiration of a reactor's licensed life for operations, no significant environmental impacts would result from storage of spent fuel, and expressed the Commission's reasonable assurance that a repository was likely to be available in the 2007 to 2009 timeframe. The Rule also stated that, as a result of this generic determination, the NRC need not prepare any site-specific environmental analysis in connection with continuing storage when issuing a license or amended license for a new reactor or independent spent fuel storage facility (ISFSI) (10 CFR 51.23(b)).

The first review of the Decision and the Rule occurred in 1989 and 1990. This review resulted in revisions to the Decision and the Rule to reflect revised expectations for the availability of the first repository, and to clarify that the expiration of a reactor's licensed life for operations referred to the full 40-year initial license for operations and a 30-year revised or renewed license. On September 18, 1990, the Commission published the revised Decision (55 FR 38474) and final Rule (55 FR 38472).

The Commission conducted its second review of the Decision and the Rule in 1999 and concluded that experience and developments after 1990 had confirmed the findings and made a comprehensive reevaluation of the Decision and Rule unnecessary. The Commission also stated that it would consider undertaking a comprehensive reevaluation when the pending repository development and regulatory activities had run their course or if significant and pertinent unexpected events occurred that raised substantial doubt about the continuing validity of the Waste Confidence decision (64 FR 68005).

In 2008, the Commission decided to conduct its third review of the Decision and the Rule. This review resulted in revisions to reflect revised expectations for the availability of the first repository and to encompass at least 60 years of continued storage. In December 2010, the Commission published its revised Decision (75 FR 81032) and final Rule (75 FR 81037).

In response to the 2010 rulemaking, the States of New York, New Jersey, Connecticut, and Vermont; several public interest groups; and the Prairie Island Indian Community sought review in the Court of Appeals challenging the Commission's NEPA analysis that supported the Rule. On June 8, 2012, the Court of Appeals ruled that some aspects of the 2010 Waste Confidence rulemaking did not satisfy the NRC's NEPA obligations. The Court of Appeals therefore vacated the Decision and the Rule and remanded the case to the NRC for further proceedings consistent with the Decision (*New York v. NRC*).

The Court of Appeals concluded that the Waste Confidence rulemaking proceeding is a major Federal action necessitating either an environmental impact statement (EIS) or an EA that results in a FONSI. The Court of Appeals identified three deficiencies in the NRC's environmental analysis:

1. Related to the Commission's conclusion that permanent disposal will be available "when necessary," the Court of Appeals held that the Commission needed to evaluate the environmental effects of failing to secure permanent disposal, given the uncertainty about whether a repository would be built.
2. Related to 60 years of continued storage, the Court of Appeals concluded that the Commission had not adequately examined the risk of spent fuel pool leaks in a forward-looking fashion.
3. Also related to continued storage, the Court of Appeals concluded that the Commission had not adequately examined the consequences of potential spent fuel pool fires.

In response to the Court of Appeals' decision, the Commission stated in Commission Order CLI–12–16 that it would not issue reactor or ISFSI licenses dependent upon the Waste Confidence Rule until the Court of Appeals' remand is appropriately addressed (NRC 2012a). This decision is not an indication that the Commission lacks confidence in the availability of an ultimate disposal solution, but rather reflects the Commission's need to develop an analysis that

assesses the environmental impacts of continued storage in a manner addressing the Court of Appeals' remand.[2] The Commission stated, however, that this determination extends only to issuance of the reactor or ISFSI license, and that all licensing reviews and proceedings should continue to move forward. In SRM–COMSECY–12–0016, the Commission directed the NRC to develop a GEIS to support an updated Waste Confidence decision and rule (NRC 2012b).

1.2 Scope of the Generic Environmental Impact Statement

This GEIS analyzes the environmental impacts of continued storage and provides a regulatory basis for the revision to the NRC's Waste Confidence Rule.

The Waste Confidence Rule, originally adopted by the Commission in 1984, satisfies part of the Commission's NEPA obligation to prepare an environmental analysis in the course of a licensing proceeding for a commercial nuclear power reactor or a facility that will store the spent fuel generated by these reactors.

For both power reactor and storage facilities, NEPA requires that the NRC address direct, indirect, and cumulative impacts of its licensing actions. Thus, in issuing a power reactor license, the NRC must analyze the environmental impacts resulting from the generation of spent fuel by the reactor and its continued storage pending ultimate disposal. Likewise, for an ISFSI, the NRC must analyze the impacts of continued storage at the facility until ultimate disposal for the spent fuel is available. The environmental impacts addressed in this GEIS are limited to the environmental impacts of continued storage.

This GEIS considers three possible continued storage timeframes: (1) short-term storage of no more than 60 years after the end of a reactor's licensed life for operations; (2) long-term storage of no more than 160 years after the end of a reactor's licensed life for operations; and (3) indefinite storage at a reactor site or at an away-from-reactor ISFSI. The indefinite storage scenario assumes that disposal in a repository never becomes available.

As discussed above, the NRC has analyzed three timeframes that represent various scenarios for the length of continued storage that will be needed before spent fuel is sent to a repository. The first, most likely, timeframe is the short-term timeframe, which analyzes 60 years of continued storage after the end of a reactor's licensed life for operations. As discussed in more detail later in this GEIS and in Appendix B to this GEIS, the NRC believes this is the most likely

[2] "Waste confidence undergirds certain agency licensing decisions, in particular new reactor licensing and reactor license renewal. Because of the recent court ruling striking down our current waste confidence provisions, we are now considering all available options for resolving the waste confidence issue, which could include generic or site-specific NRC actions, or some combination of both. We have not yet determined a course of action. But, in recognition of our duties under the law, we will not issue licenses dependent upon the Waste Confidence Decision or the Temporary Storage Rule until the court's remand is appropriately addressed." (NRC 2012a) at 4 *citations omitted*.

timeframe because the DOE has expressed its intention to provide repository capacity by 2048, which is about 10 years before the end of this timeframe for the oldest spent fuel within the scope of this analysis. Further, international and domestic experience with deep geologic repository programs supports a timeline of 25 to 35 years to provide repository capacity for the disposal of spent fuel. The DOE's prediction of 2048 is in line with this expectation. The NRC acknowledges, however, that the short-term timeframe, although the most likely, is not certain. Accordingly, two additional timeframes also are analyzed in this GEIS. The long-term timeframe considers the environmental impacts of continued storage for a total of 160 years after the end of a reactor's licensed life for operations. Finally, although the NRC considers it highly unlikely, this GEIS includes an analysis of an indefinite timeframe, which assumes that a repository does not become available.

1.3 Purpose of the Generic Environmental Impact Statement

The purpose of the GEIS is twofold:

1. To determine the environmental impacts of continued storage, including those impacts identified in the remand by the Court of Appeals in the *New York v. NRC* decision
2. To determine whether those impacts can be generically analyzed.

In the draft GEIS, the NRC preliminarily identified the environmental impacts of continued storage and determined that they could be addressed generically. In the process of developing this final GEIS, including considering and responding to the substantial volume of public comments the NRC received in response to the draft GEIS and proposed Rule, the NRC has confirmed that the impacts of continued storage can be generically addressed. Therefore, the GEIS provides a regulatory basis for a revision to 10 CFR 51.23 that addresses the environmental impacts of continued storage for use in future NRC environmental reviews.

1.4 Proposed Federal Action

The Federal action is the adoption of a revised Rule, 10 CFR 51.23, which codifies (i.e., adopts into regulation) the analysis in the GEIS of the environmental impacts of continued storage of spent fuel.

Having confirmed that the environmental impacts of continued storage can be analyzed generically, the Commission has decided to codify the GEIS impact determinations in a revised rule, 10 CFR 51.23. The rule states that, because the impacts of continued storage have been generically assessed in this GEIS, NEPA analyses for relevant future reactor and spent fuel storage facility licensing actions will not need to separately consider the environmental impacts of continued storage.

As codified, the impact determinations in the GEIS will inform the decisionmakers in licensing proceedings of the reasonably foreseeable environmental impacts of continued storage. These determinations will be weighed along with other impacts determined by the NRC on a site-specific basis for a facility or an activity. Thus, in the course of an individual licensing proceeding, the decisionmaker will be able to compare all the environmental impacts of a proposed licensing action (e.g., licensing a nuclear power reactor), including continued storage impacts, to the environmental impacts of reasonable alternatives, including the no-action alternative.

1.5 Purpose of and Need for the Proposed Action

The need for the proposed action is to provide processes for use in NRC licensing to address the environmental impacts of continued storage. Historically, the NRC and license applicants have relied on 10 CFR 51.23 to conclusively address the environmental impacts of continued storage in environmental reports, EISs, EAs, and hearings.

The purpose of the proposed action is to preserve the efficiency of the NRC's licensing processes with respect to the environmental impacts of continued storage.

1.6 Alternatives

The NRC has historically addressed its NEPA obligations for continued storage by means of an EA and a FONSI, adopted in 10 CFR 51.23. Thus, if the NRC chooses not to address the environmental impacts of continued storage by rule, the Commission would have to choose a different process to meet its NEPA obligations.

The Commission considered other options and approaches (called tracks) when it responded to COMSECY–12–0016 (NRC 2012c), in which the NRC was determining how to respond to the remand of *New York v. NRC*. If the NRC had determined during the course of the rulemaking process that the proposed revision to 10 CFR 51.23 was untenable or undesirable, then the Commission would have reconsidered whether to pursue the options and tracks in COMSECY–12–0016 (NRC 2012b), elements of which are incorporated in Section 1.6.1. Because none of the potential options the NRC could pursue if it did not continue with the rulemaking meets the purpose for the Federal action (i.e., they do not preserve the efficiency of the NRC's licensing processes), they will be addressed as options under the no-action alternative.

1.6.1 No-Action Alternative

The no-action alternative would be for the NRC not to issue the revision of 10 CFR 51.23 as a final rule (i.e., not to codify the impact determinations from this GEIS).

The prior version of 10 CFR 51.23 was vacated by the Court of Appeals in *New York v. NRC*. Therefore, adopting the no-action alternative would require the NRC to select a different approach for addressing the environmental impacts of continued storage in its licensing proceedings. The NRC could pursue a variety of options in the case of no action, including the following approaches.

- First, the NRC could review the environmental impacts from continued storage on a site-specific basis, rather than on a generic basis, in nuclear power plant and ISFSI licensing proceedings.
- Second, the NRC could finalize the GEIS without incorporating the results into a rule. This approach would allow the NRC to adopt these GEIS findings into environmental reviews for future licensing activities, but without the binding effect of a rule.
- Third, the Commission could issue a policy statement explaining how the Commission intends to address the NRC's NEPA obligations with respect to continued storage. The policy statement would not bind licensees and applicants like a rule, but it would provide notice of how, or whether, the Commission intends to incorporate the findings of the GEIS into environmental reviews for future licensing activities.

1.6.1.1 Site-Specific Review Option

If the NRC decided not to incorporate the results of this GEIS into a revision of 10 CFR 51.23, the NRC could address the environmental impacts of continued storage in site-specific reviews. These reviews would generally take place within the context of existing environmental review processes for new reactor licensing, reactor license renewal, and ISFSI licensing and renewals. In some cases, these reviews could involve time- and resource-intensive considerations of issues that could readily be resolved on a generic basis. Therefore, this option is inconsistent with Council on Environmental Quality guidance for achieving efficiency and timeliness under NEPA.

In the site-specific review option, it is likely that the NRC would incorporate as much of the analysis from this GEIS as possible into site-specific NEPA reviews. Later reviews would likely incorporate, by reference, applicable findings from the first few published environmental documents that used the analyses.

From a procedural perspective, the main effect of the site-specific review option is that the NRC would have to address the environmental impacts of continued storage for individual licensing proceedings on a site-by-site basis. Requiring the NRC to prepare site-specific discussions of generic issues, like those associated with continued storage, would result in the considerable expenditure of public, NRC, and applicant resources. Further, licensing boards could be required to hear nearly identical issues in each proceeding on these generic matters. Adopting the generic impacts of continued storage in a rule, on the other hand, allows the NRC and the participants in its licensing proceedings to focus their limited resources on site-specific issues that are unique to each licensing action.

1.6.1.2 GEIS-Only Option

If the NRC decided not to incorporate the results of this GEIS into a revision of 10 CFR 51.23, the NRC could issue this GEIS for use in support of site-specific licensing reviews. This nonbinding, GEIS-only option would add somewhat to the efficiency of NRC reviews by addressing issues that are similar at all sites or that otherwise are susceptible to generic consideration. For particular licensing actions, the EIS or EA could incorporate by reference any finding or conclusion of the GEIS, but participants in a proceeding could still raise issues regarding continued storage.

This approach would be consistent with Council on Environmental Quality guidance regarding efficiency and timeliness under NEPA. However, while this approach would be beneficial in terms of improved efficiency, the GEIS's findings and conclusions would remain open to challenge in site-specific reviews for reactor and ISFSI licensing proceedings. Although this incorporation-by-reference approach would satisfy NRC's NEPA obligations, this option could enable participants in contested licensing proceedings to raise issues that challenge the conclusions of the GEIS, an outcome that may result in considerable expenditure of public, NRC, and applicant resources. Further, licensing boards might be required to hear nearly identical contentions in individual licensing proceedings. Thus, although the "GEIS-only" approach would likely provide greater efficiencies than the site-specific review option, it would eliminate some of the efficiency and time-savings that the NRC would gain through a binding generic analysis of continued storage. Adopting the generic impacts of continued storage in a rule, on the other hand, would allow the NRC and parties to its licensing proceedings to focus their limited resources on the site-specific issues that are unique to each licensing action.

1.6.1.3 Policy-Statement Option

Instead of issuing a rule to adopt the results of the GEIS, the Commission could issue a policy statement that expresses its intent to either incorporate the environmental impacts determined by the GEIS into site-specific NEPA analyses or prepare a site-specific evaluation without regard to the GEIS for each NRC licensing action.

In general, a policy statement suffers from many of the same shortcomings as the site-specific review and GEIS-only no-action options. The NRC would still need to address the impacts of continued storage in site-specific NEPA analyses either by incorporating the impacts from the GEIS or through the consideration of the impacts on a site-specific basis if no GEIS is adopted. Like the site-specific review and GEIS-only no-action options, the policy-statement no-action option would reduce the efficiencies that the NRC would gain through a rule in which incorporation of environmental impacts of continued storage would be binding in licensing proceedings, although it would at least provide notice to participants that the Commission might elect to incorporate by reference all or a portion of the existing GEIS.

Preparation of site-specific analyses of continuing storage impacts would result in considerable expenditure of public, NRC, and applicant resources. Further, licensing boards could be expected to hear nearly identical issues in each proceeding on these generic matters. Conversely, determining and adopting the generic impacts of continued storage would allow the NRC and participants in its licensing proceedings to focus their limited resources on site-specific issues that are unique to each licensing action.

1.6.2 Alternatives Considered but Eliminated

Interested parties submitted numerous scoping comments suggesting that this GEIS should consider other actions as alternatives to adopting the proposed revision to 10 CFR 51.23. In this section, this GEIS considers and eliminates the most commonly suggested alternatives because they fail to meet the purpose and need for this proposed action.

1.6.2.1 Cessation of Licensing or Cessation of Reactor Operation

Cessation of licensing activities and cessation of reactor operations do not satisfy the stated purpose and need for this proposed action. Abandonment of reactor licensing and the closure of existing plants is not a reasonable alternative to the proposed action because these actions would not meet the NRC's stated objectives in proposing to adopt the revision to 10 CFR 51.23.

Through the Atomic Energy Act of 1954, as amended and the Energy Reorganization Act of 1974, as amended, Congress directed the NRC to issue licenses for nuclear power plants and certain nuclear materials if there is, among other things, no undue risk (i.e., that there is reasonable assurance of adequate protection) to public health and safety and common defense and security. In these statutes, Congress also authorized and directed the NRC to issue regulations establishing requirements for providing adequate protection to public health and safety and common defense and security (see Atomic Energy Act 161b). In separate rulemaking actions, the Commission established criteria through which the NRC (1) satisfies its Atomic Energy Act responsibility to ensure reasonable assurance of adequate protection of public health and safety in the construction and operation of nuclear power plants; and (2) satisfies its NEPA responsibility to consider environmental impacts in the construction and operation of nuclear power plants. Therefore, under current law the NRC will issue a nuclear power plant or materials license (including a license authorizing storage of spent fuel) when the NRC determines that a license applicant has met the NRC's regulatory standards for issuance of a license, addressing adequate protection of public health and safety and common defense and security, and the NRC has no reason to doubt that issuance of the license would provide adequate protection. Further, if the NRC determines that a nuclear power plant or the use of nuclear materials poses a threat to public health and safety or the common defense and security, the NRC will amend, suspend, or revoke nuclear power plant or materials licenses.

Although cessation of nuclear power plant licensing and operations would halt the future generation of spent fuel, other environmental impacts could result from the required development of replacement power sources or demand reductions. Even then, the environmental impacts of continued storage would not cease until sufficient repository capacity becomes available.

1.6.2.2 Implementing Additional Regulatory Requirements

Imposing new regulatory requirements, such as requiring licensees to implement hardened at-reactor storage systems, reduce the density of spent fuel in pools, or expedite transfer of spent fuel from pools to ISFSIs, is outside the scope of this proposed action, which includes actions that preserve the efficiency of the NRC's licensing processes with respect to the environmental impacts of continued storage. Adoption of a revised 10 CFR 51.23, supported by this GEIS, is not a licensing action, and does not impose new requirements on licensees or applicants. Therefore, the NRC cannot impose new requirements or regulations on the duration of spent fuel storage in pools through this proposed action. In separate proceedings, the NRC is considering an update to its ISFSI security requirements, as described in the December 16, 2009, *Federal Register* Notice (74 FR 66589), "Draft Technical Basis for Rulemaking Revising Security Requirements for Facilities Storing SNF [spent nuclear fuel] and HLW [high-level waste]; Notice of Availability and Solicitation of Public Comments." The NRC has provided responses to public comments on this draft technical basis (NRC 2013a). In the context of the rulemaking, the NRC is also considering a petition requesting that the NRC require hardened onsite storage at all power plants and away-from-reactor storage sites (see "Petition for Rulemaking Submitted by C–10 Research and Education Foundation, Inc.," 77 FR 63254, October 16, 2012). The proposed rule, scheduled to be published for comment in 2017, will formally address the 2012 petition. In addition, the NRC has separately considered expedited transfer of spent fuel from pools into casks as part of lessons learned from the March 11, 2011, earthquake and subsequent tsunami that badly damaged the Fukushima I Nuclear Power Plant in Japan (NRC 2014a, 2013b, 2012d), and it will not be separately reconsidered in this proceeding.

1.6.3 Comparison of Reasonable Alternatives

The reasonable alternatives considered here include the proposed action (revising 10 CFR 51.23) and no action, which may result in the NRC pursuing any of several options: site-specific reviews of the environmental impacts of continued storage in each licensing proceeding, a generic EIS without a rule, or a Commission policy statement.

The proposed action and the NRC's potential options in case of no action are simply different administrative approaches for addressing the environmental impacts of continued storage

in NRC licensing processes. Consistent with the NRC's categorical exclusion[3] in 10 CFR 51.22(c)(3)(i), the proposed action has no significant environmental impacts. The no-action alternative—including all of NRC's potential options in the case of no action—also has no significant environmental impacts. Therefore, the proposed action and the no-action alternative, including NRC's potential options in case of no action, have the same environmental impacts. In subsequent chapters of this GEIS, the NRC considers the potential environmental impacts that result from continued storage. In Chapter 7, the NRC provides a cost-benefit analysis of the proposed action and the no-action alternative, including NRC's potential options in case of no action.

1.7 Public and Agency Involvement

1.7.1 Scoping Process

The NRC began the environmental review process by publishing a Notice of Intent to prepare an EIS and conduct scoping in the *Federal Register* on October 25, 2012 (77 FR 65137). The NRC conducted live and webcast public meetings on November 14, 2012 (NRC 2012e), and conducted public webinars on December 5 and 6, 2012 (NRC 2012f). The NRC transcribed the discussions that took place during the scoping meetings and webinars. The NRC received approximately 700 pieces of comment correspondence, primarily through the website at www.regulations.gov (using Docket ID NRC–2012–0246) and, to a lesser extent, by fax and mail. The scoping period formally closed on January 2, 2013, although staff considered comments received after this date to the extent practical.

Scoping participants included private citizens and representatives of Tribes and State governments, the U.S. Environmental Protection Agency (EPA), multiple environmental and advocacy groups, industry, and quasi-governmental organizations. In all, the NRC identified approximately 1,700 comments from the materials submitted.

The NRC responded to comments in its *Waste Confidence Generic Environmental Impact Statement Scoping Process Summary Report* (NRC 2013c), which was published on March 4, 2013. The summary report, in accordance with 10 CFR 51.29(b), contained a summary of conclusions reached by the NRC and issues identified as a result of the scoping process. Additional information regarding the summary report is provided in Appendix A. A summary of outreach and correspondence related to the environmental review is provided in Appendix C.

[3] A categorical exclusion refers to "… a category of actions which do not individually or cumulatively have a significant effect on the human environment and which the Commission has found to have no such effect in accordance with procedures set out in 51.22, and for which, therefore, neither an environmental assessment nor an environmental impact statement is required" (10 CFR 51.14).

1.7.2 Public Comments Received on the Draft GEIS and Proposed Rule

The EPA published a Notice of Availability in the *Federal Register* on September 13, 2013 (78 FR 56695), which started the 75-day public comment period on the draft GEIS. Due to the October 2013 government shutdown that caused the agency to reschedule several public meetings, the NRC extended the public comment period to December 20, 2013, for a total of 98 days (78 FR 66858). During the public comment period, the NRC hosted 13 public meetings throughout the United States to describe the results of the NRC's environmental review, answer questions, and accept comments on the draft GEIS and proposed Rule. Approximately 1,400 participants at those meetings provided nearly 500 oral comments. In addition, the NRC received over 33,000 written submittals. Summaries of the public comments received on the draft GEIS and proposed Rule and the NRC's responses are provided in Appendix D. Separately, the NRC published a document containing the text of all identified unique comments, *Comments on the Waste Confidence Draft Generic Environmental Impact Statement and Proposed Rule* (NRC 2014b).

This final GEIS—with the exception of Chapters 10 and 11 and Appendices D and I—uses "change bars," indicated by vertical lines in the page margins, to denote where information has been revised in response to public comments, or where changes, other than minor editorial changes, have been made.

1.7.3 Cooperating Agencies

The NRC did not identify any cooperating agencies for the environmental review, nor did the NRC receive any formal requests for cooperating agency status.

1.8 Analytical Approach

The NRC's methodology and approach to evaluating the environmental impacts of continued storage follows the guidance in NUREG–1748, *Environmental Review Guidance for Licensing Actions Associated with NMSS Programs: Final Report* (NRC 2003), where applicable.

This GEIS evaluates the potential environmental impacts of continued storage after the licensed life for reactor operations at reactor sites in Chapter 4, and at away-from-reactor sites in Chapter 5. The environmental impacts are evaluated for three timeframes based on when a repository would become available. This section outlines the approach, timeframes, assumptions, and previous NEPA assessments the NRC used in its evaluation.

1.8.1 Approach to Impact Assessment

To evaluate the potential environmental impacts of continued storage at reactor sites (Chapter 4), the NRC assumes that spent fuel is stored in a pool and in an ISFSI, both of which

have already been constructed and are operating during reactor operations. Therefore, many of the impacts of at-reactor continued spent fuel storage can be determined by comparing onsite activities that occur during reactor operations to the reduced activities that occur during continued storage. Where appropriate, the environmental impacts during reactor operations are drawn from the License Renewal GEIS (NRC 2013d), which evaluates the impacts of continued reactor operation. In addition, this GEIS uses analyses in EAs prepared for ISFSIs and renewals of those ISFSI licenses.

For the impacts of continued storage at an-away-from-reactor ISFSI (Chapter 5), the NRC evaluated the impacts of an ISFSI of the same size as described in the *Final Environmental Impact Statement for the Construction and Operation of an Independent Spent Nuclear Fuel Storage Installation on the Reservation of the Skull Valley Band of Goshute Indians and Related Transportation Facility in Tooele County, Utah* (NRC 2001). Chapter 5 contains a list of the assumptions used in that analysis. Unlike in Chapter 4, the generic analysis for away-from-reactor storage at an ISFSI includes a general discussion of the construction of the facility. However, the site-specific impacts of the construction and operation of any proposed away-from-reactor ISFSI would be evaluated by NRC as part of that ISFSI's licensing process.

For both the at-reactor and away-from-reactor storage sites, the NRC assumes that the construction, operation, and replacement of a dry transfer system (DTS) facility is necessary at some point to handle the transfer of fuel. The physical characteristics of a DTS, which is based on well-understood technology, are explained in more detail in Chapter 2 (see Section 2.1.4).

The GEIS accounts for the age of storage facilities in the evaluation of impacts. For example, a storage cask that was loaded with spent fuel 40 years prior to the end of the licensed life for reactor operations has already been in service for 40 years at the beginning of the short-term timeframe and is assumed to be replaced at the beginning of the long-term timeframe (40 years of service at the beginning of the short-term timeframe plus 60 years of service over the short-term timeframe results in a total service time of 100 years, which is the assumed replacement period for dry cask storage facilities).

1.8.2 Timeframes Evaluated

The NRC evaluated the environmental impacts of continued storage in three timeframes that begin once the licensed life of the reactor ends—short-term storage, long-term storage, and indefinite storage (see Figure 1-1).

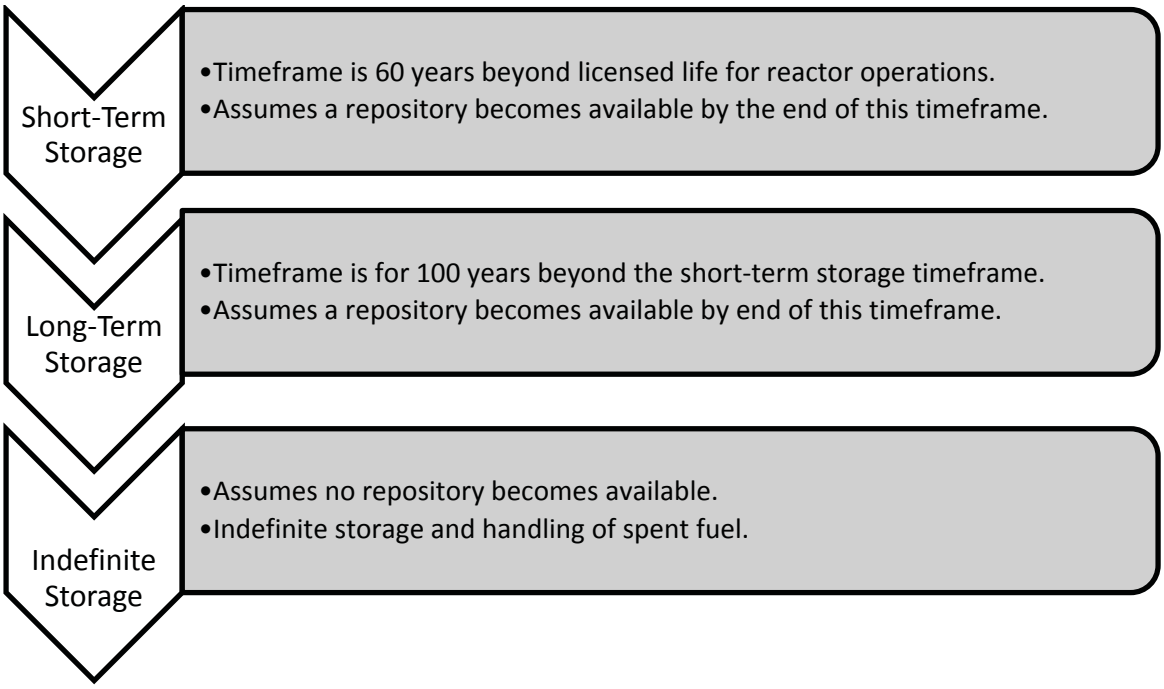

Figure 1-1. Continued Storage Timeframes

The first timeframe—*short-term storage*—lasts for 60 years and begins after the end of a reactor's licensed life for operations. The NRC evaluated the environmental impacts resulting from the following activities that occur during the short-term storage timeframe:

- continued storage of spent fuel in spent fuel pools (at-reactor only) and ISFSIs,
- routine maintenance of at-reactor spent fuel pools and ISFSIs (e.g., maintenance of concrete pads),
- construction and operation of an away-from-reactor ISFSI (including routine maintenance), and
- handling and transfer of spent fuel from spent fuel pools to ISFSIs.

The next timeframe—*long-term storage*—is 100 years and begins immediately after the short-term storage timeframe. The NRC evaluated the environmental impacts resulting from the following activities that occur during long-term storage:

- continued storage of spent fuel in ISFSIs, including routine maintenance,
- one-time replacement of ISFSIs and spent fuel canisters and casks, and
- construction and operation of a DTS (including replacement).

For the long-term storage timeframe, the NRC assumes that all spent fuel has already been moved from the spent fuel pool to dry cask storage by the end of the short-term storage timeframe. The spent fuel pool would be decommissioned within 60 years after permanent cessation of operation, as required by 10 CFR 50.82 or 10 CFR 52.110.

The third timeframe—*indefinite storage*—assumes that a geologic repository does not become available. In this timeframe, at-reactor and away-from-reactor ISFSIs would continue to store spent fuel in dry casks indefinitely. For the evaluation of environmental impacts if no repository becomes available, the following activities are considered:

- continued storage of spent fuel in ISFSIs, including routine maintenance,
- replacement of ISFSIs and spent fuel canisters and casks every 100 years,
- construction and operation of an away-from-reactor ISFSI (including replacement every 100 years), and
- construction and operation of a DTS (including replacement every 100 years).

These activities are the same as those that would occur for long-term storage, but without a repository, they would occur repeatedly.

1.8.3 Analysis Assumptions

To evaluate the potential environmental impacts of continued storage, this GEIS makes several assumptions.

- Although the NRC recognizes that the precise time spent fuel is stored in pools and dry cask storage systems will vary from one reactor to another, this GEIS makes a number of reasonable assumptions regarding the length of time the fuel can be stored in a spent fuel pool and in a dry cask before the fuel needs to be moved or the facility needs to be replaced. With respect to spent fuel pool storage, the NRC assumes that all spent fuel is removed from the spent fuel pool and placed in dry cask storage in an ISFSI no later than 60 years after the end of the reactor's licensed life for operation. With respect to dry cask storage, the NRC assumes that the licensee uses a DTS during long-term and indefinite storage timeframes to move the spent fuel to a new dry cask every 100 years. Similarly, the NRC assumes that the DTS and the ISFSI pad are replaced every 100 years. For an ISFSI that reaches 100 years of age near the end of the short-term storage timeframe, the NRC assumes that the replacement would occur during the long-term storage timeframe.
- Based on its knowledge of and experience with the structure and operation of the various facilities that will provide continued storage, including the normal life of those facilities, the NRC believes that spent fuel pool storage could last for about 60 years beyond the licensed life for operation of the reactor where it is stored, and that each ISFSI will last about 100 years.

- The most reasonably foreseeable assumption is that institutional controls (i.e., the continued regulation of spent fuel) will continue. The assumption that institutional controls will continue enables an appropriate and reasonable evaluation of the environmental impacts of continued storage over an indefinite timeframe. Absent the stability and predictability that follows institutional controls, including but not limited to NRC licensing and regulatory controls, few impacts could be reliably forecast. For the purpose of the analyses in this GEIS, the NRC assumes that regulatory control of radiation safety will remain at the same level of regulatory control as currently exists today. Section B.3.4 of Appendix B provides further discussion regarding institutional controls.
- A DTS will be built at each ISFSI location during the long-term storage timeframe to facilitate spent fuel transfer and handling.
- The NRC assumes a 100-year replacement cycle for spent fuel canisters and casks. This assumption is consistent with assumptions made in the Yucca Mountain Final EIS (DOE 2008).
- The 100-year replacement cycle also assumes replacement of the ISFSI facility and DTS.
- Based on currently available information, the 100-year replacement cycle provides a reasonably conservative assumption for a storage facility that would require replacement at a future point in time. However, this assumption does not mean that dry cask storage systems and facilities *need* to be replaced every 100 years to maintain safe storage.
- Replacement of the entire ISFSI would occur over the course of each 100-year interval, starting at the beginning of the long-term storage timeframe (approximately 100 years after spent fuel would have first been transferred from the spent fuel pool into a dry cask storage system, which would occur about 35 years into a reactor's licensed life for operations).
- The NRC assumes that the land used for the ISFSI pads and DTS would be reclaimed after the facilities are demolished and, therefore, would be used again in the next 100-year replacement cycle. The NRC assumes the initial replacement ISFSI and DTS would be built near the existing facilities. The NRC believes this assumption is reasonable because the characteristics of the previously disturbed land are already known and are suitable for ISFSI and DTS design and construction.
- The NRC assumes that aging management, including routine maintenance activities and programs, occurs between replacements. These "routine" or planned maintenance activities are distinct from the "replacement" of facilities and equipment.
- The spent fuel is moved from the spent fuel pool to dry cask storage within the short-term storage timeframe.
- Under NRC regulations, a nuclear power plant that operates for the term specified in its license is required to complete decommissioning within 60 years after the licensed life for operations in accordance with 10 CFR 50.82 or 52.110. Under these regulations, a plant that permanently ceases operation before the term specified in its operating license is

required to complete decommissioning within 60 years after the permanent cessation of operation. Consistent with this requirement, the NRC assumes that, by the end of the short-term storage timeframe, a licensee will either terminate its Part 50 or Part 52 license and receive a specific Part 72 ISFSI license (see 10 CFR Part 72, Subpart C) or apply to receive Commission approval under 10 CFR 50.82(a)(3) or 52.110(c) to continue decommissioning under its Part 50 or Part 52 license. Accordingly, the NRC would conduct any appropriate site-specific NEPA analysis for either issuance of a Part 72 ISFSI license upon termination of the licensee's Part 50 or Part 52 license or approval to continue decommissioning beyond 60 years after ceasing operations in accordance with 10 CFR 50.82(a)(3) or 52.110(c). Further, the NRC assumes that replacing an ISFSI and licensing a DTS are licensing actions that would be subject to separate site-specific NEPA reviews. The ISFSI and DTS would be decommissioned separately.

- Construction, operation, and replacement of the DTS are assumed to occur within the long-term storage timeframe. If the DTS is built at the beginning of the long-term storage timeframe, it could be near the end of its useful life by the end of that storage timeframe. To be conservative, the NRC included the impacts of replacing the DTS one time during the long-term storage timeframe.
- Because an away-from-reactor ISFSI could store fuel from several different reactors, the earliest an away-from-reactor ISFSI would enter the short-term timeframe is when the first of these reactors reaches the end of its licensed life for operation.
- The amount of spent fuel generated is based on the assumption that the nuclear power plant operates for 80 years (40-year initial term plus two 20-year renewed terms).[4]
- A typical spent fuel pool of 700 metric tons of uranium storage capacity reaches its licensed capacity limit about 35 years into the licensed life for operation of a reactor. At that point, some of the spent fuel would need to be removed from the spent fuel pool and transferred to a dry cask storage system at either an at-reactor or away-from-reactor ISFSI.
- The environmental impacts of constructing a "spent fuel pool island," which allows the spent fuel pool to be isolated from other reactor plant systems to facilitate decommissioning, are considered within the analysis of cumulative effects in Chapter 6. Because a new spent fuel pool cooling system would be smaller in size and have fewer associated impacts than existing spent fuel pool cooling systems, the environmental impacts of operating the new spent fuel pool cooling system in support of continued storage in the spent fuel pool, would be bound by the impacts of operating the existing cooling system described in Chapter 4.
- It is assumed that an ISFSI of sufficient size to hold all spent fuel generated will be constructed during the licensed life for operation.

[4] The Commission's regulations provide that renewed operating licenses may be subsequently renewed, although no licensee has yet submitted an application for such a subsequent renewal. This GEIS included two renewals as a conservative assumption in evaluating potential environmental impacts.

- Sufficient low-level waste (LLW) disposal capacity will be made available when needed. Historically, the demand for LLW disposal capacity has been met by private industry. The NRC expects that this trend will continue in the future. For example, in response to demand for LLW disposal capacity, Waste Control Specialists, LLC, opened a LLW disposal facility in Andrews County, Texas, on April 27, 2012.

The analyses in this GEIS are based on current technology and regulations. Appendix B provides further information supporting the analysis assumptions. These analyses are not intended to be, and should not be interpreted as, representative of any specific storage facility or site in the United States where spent fuel is currently stored or could be stored in the future.

1.8.4 Other Environmental Analyses

Numerous NRC proceedings, regulations, or NEPA documents address the environmental impacts of other NRC-regulated activities: the licensed life for operation of a commercial nuclear power facility, the licensed life of an ISFSI, spent fuel transportation, the nuclear fuel cycle, license termination, and ultimate spent fuel disposal. This is depicted in Figure 1-2. A brief description of these other NEPA documents and regulations is presented below. NEPA documents used to support the analyses in this GEIS are listed in Table 1-1.

The storage of spent fuel *during* the initial licensed term for operation of a nuclear reactor is considered within the site-specific EIS for either a 10 CFR Part 50 or 10 CFR Part 52 licensing review.

The impacts from renewing the operating licenses for commercial nuclear power plants for up to an additional 20 years are evaluated in site-specific EISs, which tier off the License Renewal GEIS (NRC 2013d). The License Renewal GEIS addresses spent fuel storage *during* the license renewal term. The findings from the License Renewal GEIS with respect to environmental impacts of continued nuclear power plant operations have been codified in regulation (in 10 CFR Part 51, Table B-1 of Appendix B to Subpart A).

The impacts from storage of spent fuel during the initial and renewed licensed terms of an ISFSI are addressed in site-specific NEPA reviews for licensees that elect to construct ISFSIs with specific licenses under 10 CFR Part 72. For those licensees that elect to construct an ISFSI under a general license, the environmental review has already been conducted and documented in an EA (NRC 1989).

The impacts from decommissioning nuclear power plants have previously been evaluated in *Final Generic Environmental Impact Statement on Decommissioning of Nuclear Facilities Supplement 1 Regarding the Decommissioning of Nuclear Power Reactors Main Report* (Decommissioning GEIS) (NRC 2002).

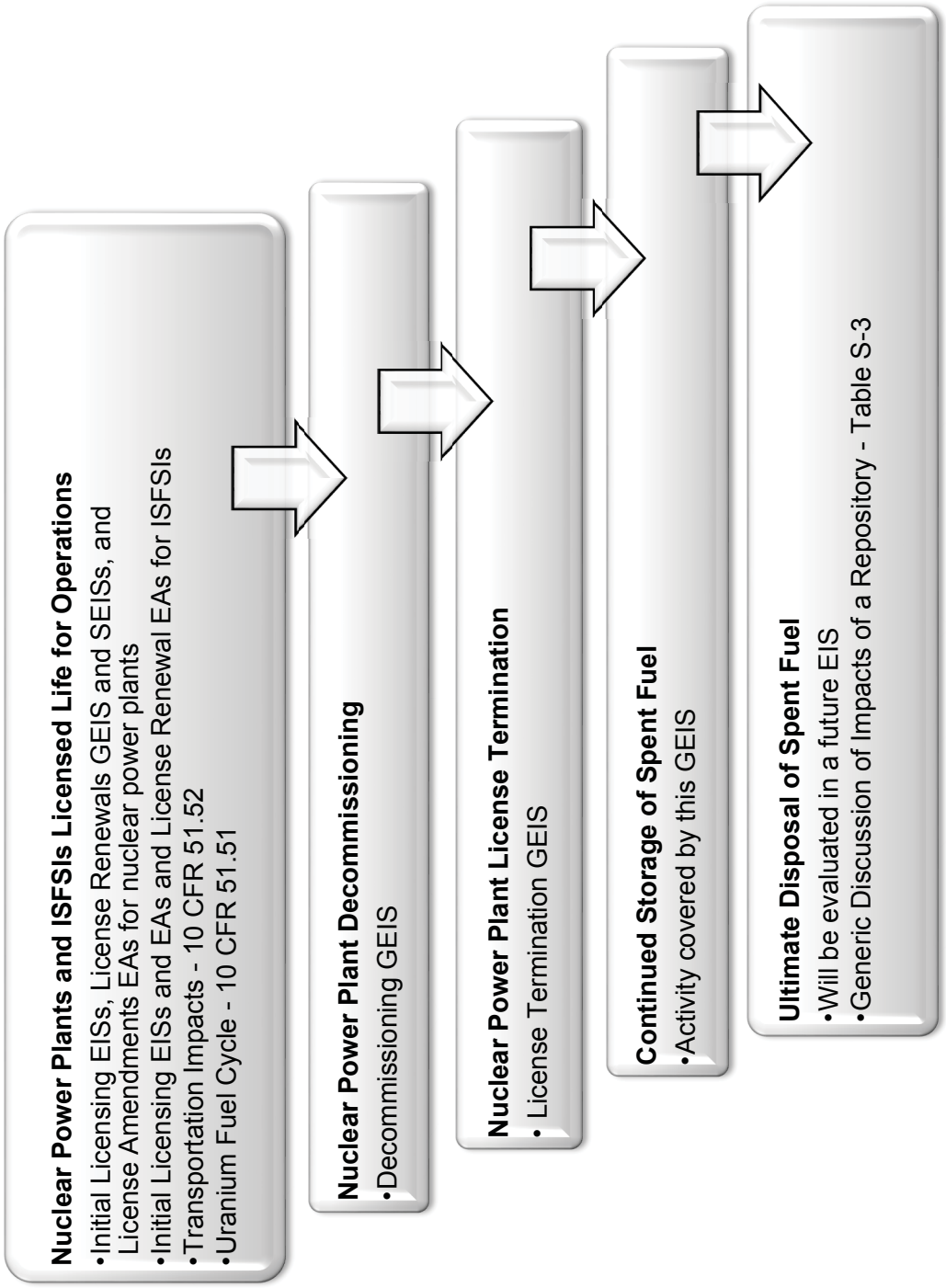

Figure 1-2. NEPA Analyses for NRC Activities

Table 1-1. List of NEPA Documents Used in Preparation of this GEIS

Document	Agency	Date	Availability
Final EIS for a Geologic Repository for the Disposal of Spent Nuclear Fuel and High-Level Radioactive Waste at Yucca Mountain, Nye County, Nevada and its supplements	DOE	June 2008	Online at www.energy.gov ML081750212[(a)]
Generic EISs			
Final Generic EIS on Decommissioning of Nuclear Facilities Supplement 1 Regarding the Decommissioning of Nuclear Power Reactors	NRC	November 2002	NUREG–0586[(b)] ML023470323
Final Generic EIS on Handling and Storage of Spent Light Water Power Reactor Fuel	NRC	August 1979	NUREG–0575[(b)] ML022550127
ISFSI Licensing			
EA for 10 CFR Part 72 Licensing Requirements for the Independent Storage of Spent Fuel and High-Level Radioactive Waste	NRC	August 1984	NUREG–1092[(b)] ML091050510
EA for 10 CFR Part 72 Proposed Rule on Storage of Spent Nuclear Fuel in NRC-Approved Storage Casks at Nuclear Power Reactor Sites	NRC	March 1989	ML051230231
Final EIS for the Construction and Operation of an Independent Spent Nuclear Fuel Storage Installation on the Reservation of the Skull Valley Band of Goshute Indians and Related Transportation Facility in Tooele County, Utah	NRC	December 2001	NUREG–1714[(b)] ML020150217
Environmental Assessment Related to the Construction and Operation of the H.B. Robinson Independent Spent Fuel Storage Installation	NRC	March 1986	ML060200531[(a)]
Environmental Assessment for the Trojan Independent Spent Fuel Storage Installation	NRC	November 1996	ML060410416[(a)]
Environmental Assessment for the License Renewal of the General Electric Morris Operation Independent Spent Fuel Storage Installation in Morris, Illinois	NRC	November 2004	ML043360415[(a)]

Table 1-1. List of NEPA Documents Used in Preparation of this GEIS (cont'd)

Document	Agency	Date	Availability
Final Environmental Impact Statement for the Construction and Operation of an Independent Spent Fuel Storage Installation to Store the Three Mile Island Unit 2 Spent Fuel at the Idaho National Engineering and Environmental Laboratory	NRC	March 1998	NUREG–1626[(b)] ML123480202
Environmental Assessment Related to the Construction and Operation of the Oconee Nuclear Station Independent Spent Fuel Storage Installation - Redacted	NRC	October 1988	ML123480209[(a)] (Redacted)
Environmental Assessment Related to the Construction and Operation of the Calvert Cliffs Independent Spent Fuel Storage Installation – Redacted	NRC	March 1991	ML123480177[(a)] (Redacted)
Environmental Assessment for Proposed Renewal of Calvert Cliffs Nuclear Power Plant Independent Spent Fuel Storage Installation	NRC	April 2012	ML121220084[(a)]
Environmental Assessment Related to the Construction and Operation of the Fort St. Vrain Independent Spent Fuel Storage Installation	NRC	February 1991	ML123480181[(a)] (Redacted)
Environmental Assessment Related to the Construction and Operation of the Humboldt Bay Independent Spent Fuel Storage Installation	NRC	October 2005	ML052430106
Notice of Issuance of Environmental Assessment and Finding of No Significant Impact for the Diablo Canyon Independent Spent Fuel Storage Installation	NRC	October 2003	ML032970369
Environmental Assessment Related to the Construction and Operation of the Rancho Seco Independent Spent Fuel Storage Installation	NRC	August 1994	ML123480187[(a)] (Redacted)
Environmental Assessment Related to the Construction and Operation of the North Anna Independent Spent Fuel Storage Installation	NRC	March 1997	ML123480192[(a)] (Redacted)

Table 1-1. List of NEPA Documents Used in Preparation of this GEIS (cont'd)

Document	Agency	Date	Availability
Reactor License Renewals			
Generic Environmental Impact Statement for License Renewal of Nuclear Plants, Rev. 1	NRC	May 2013	NUREG–1437[(b)] Vol. 1 ML13106A241 Vol. 2. ML13106A242 Vol. 3. ML13106A244
Supplemental Environmental Impact Statement for Wolf Creek Generating Station License Renewal	NRC	May 2008	NUREG–1437, Supplement 32[(b)]
New Reactor Licensing			
Environmental Impact Statement for the Combined License (COL) for Enrico Fermi Unit 3	NRC	January 2013	NUREG–2105[(b)] Vol. 1 ML12307A172 Vol. 2 ML12307A176 Vol. 3 ML12307A177 Vol. 4 ML12307A202
Environmental Impact Statement for Combined Licenses (COLs) for South Texas Project Electric Generating Station Units 3 and 4	NRC	February 2011	NUREG–1937[(b)] Vol. 1 ML111290826 Vol. 2 ML11049A001
Environmental Impact Statement for the Combined License (COL) for Calvert Cliffs Nuclear Power Plant Unit 3	NRC	May 2011	NUREG–1936[(b)] ML12026A658
Final Environmental Impact Statement for Combined Licenses (COLs) for William States Lee III Nuclear Station Units 1 and 2	NRC	December 2013	NUREG–2111 Vol. 1 ML13340A005 Vol. 2 ML13340A006 Vol. 3 ML13340A007
Previous Waste Confidence Rules and Decisions			
Federal Register Notice – "Consideration of Environmental Impacts of Temporary Storage of Spent Fuel After Cessation of Reactor Operation; Waste Confidence Decision Update; Final Rules"	NRC	December 2010	75 FR 81032
Federal Register Notice – "Waste Confidence Decision Review: Status"	NRC	December 1999	64 FR 68005
Federal Register Notice – "Consideration of Environmental Impacts of Temporary Storage of Spent Fuel After Cessation of Reactor Operation; and Waste Confidence Decision Review; Final Rules"	NRC	September 1990	55 FR 38472

Table 1-1. List of NEPA Documents Used in Preparation of this GEIS (cont'd)

Document	Agency	Date	Availability
Federal Register Notice – "Waste Confidence Decision and Requirements for Licensee Actions Regarding the Disposition of Spent Fuel Upon Expiration of Reactor Operating Licenses; Final Rules"	NRC	August 1984	49 FR 34658

(a) ADAMS can be accessed online. Accession numbers are provided for EAs.
(b) NUREGs can be found online at the NRC website.

The environmental impacts of portions of the uranium fuel cycle that occur before new fuel is delivered to the plant and after spent fuel is sent to a disposal site have been evaluated and are codified in regulation (10 CFR 51.51, Table S–3).

Impacts from the transportation of fuel and waste to and from a nuclear power reactor are codified in regulation (10 CFR 51.52, Table S–4).

The environmental impacts of residual radioactivity remaining after license termination are addressed in the *Generic Environmental Impact Statement in Support of Rulemaking on Radiological Criteria for License Termination of NRC-Licensed Nuclear Facilities: Final Report* (License Termination Rule GEIS) (NRC 1997).

The environmental impacts of a specific geologic repository will be addressed in the EIS that the DOE is required to submit for any geologic repository application that it submits.

1.8.5 Significance of Environmental Impacts

The NRC has established a standard of *significance* for assessing environmental issues. In NRC environmental reviews, significance indicates the importance of likely environmental impacts and is determined by considering two variables: *context* and *intensity*. Context is the geographic, biophysical, and social setting in which the effects will occur. Intensity refers to the severity of the impact, in whatever context it occurs. The NRC uses a three-level standard of significance based upon the President's Council on Environmental Quality guidelines (40 CFR 1508.27):

> SMALL—Environmental effects are not detectable or are so minor that they will neither destabilize nor noticeably alter any important attribute of the resource. For the purposes of assessing radiological impacts, the Commission has concluded that radiological impacts that do not exceed permissible levels in the Commission's regulations are considered small.

MODERATE—Environmental effects are sufficient to alter noticeably, but not to destabilize, important attributes of the resource.

LARGE—Environmental effects are clearly noticeable and are sufficient to destabilize important attributes of the resource.

For issues in which the significance determination is based on risk (i.e., the probability of occurrence as well as the potential consequences), the probability of occurrence, as well as the potential consequences, have been factored into the determination of significance. For some resource areas, the impact determination language is specific to the authorizing regulation, executive order, or guidance.

1.8.6 Issues Eliminated from Review in this GEIS

The NRC is evaluating the continued storage of commercial spent fuel in this GEIS. Thus, certain topics are not addressed because they are not within the scope of this review. These topics include:

- noncommercial spent fuel (e.g., defense waste),
- commercial HLW generated from reprocessing,
- greater-than-class-C LLW,
- advanced reactors (e.g., high-temperature and gas-cooled reactors),
- foreign spent fuel,
- nonpower reactor (e.g., test and research reactors),
- need for nuclear power, and
- reprocessing of commercial spent fuel.

The *Waste Confidence Generic Environmental Impact Statement Scoping Process Summary Report* (NRC 2013c) and Appendix D provide additional details on topics that are considered out of scope for this GEIS.

1.8.7 GEIS Contents

The subsequent chapters of this GEIS are organized as follows. Chapter 2 describes typical facility characteristics and activities that are used to assess environmental impacts of continued storage. Chapter 3 describes the affected environment. Chapters 4 and 5 include analyses of potential environmental impacts of at-reactor storage (Chapter 4) and away-from-reactor storage (Chapter 5). Chapter 6 evaluates the cumulative impacts of continued storage with other reasonable past, present, and reasonably foreseeable actions. Chapter 7 provides cost-benefit analyses of the proposed action and the NRC's options in the case of no action, as well

as the NRC's recommendation on which alternative (the proposed action or no action) is the preferred alternative. Chapter 8 summarizes the environmental impacts of continued storage analyzed in the preceding chapters. Chapter 9 provides a list of the staff who authored this GEIS. Chapter 10 provides an index of terms used throughout the GEIS and Chapter 11 provides a glossary.

Appendices to this GEIS provide the following additional information:

- Appendix A – Scoping Comments
- Appendix B – Technical Feasibility of Continued Storage and Repository Availability
- Appendix C – Outreach and Correspondence
- Appendix D – Draft GEIS and Proposed Rule Comment Summaries and Responses
- Appendix E – Analysis of Spent Fuel Pool Leaks
- Appendix F – Spent Fuel Pool Fires
- Appendix G – Spent Fuel Storage Facilities
- Appendix H – Estimated Costs of Alternatives
- Appendix I – High-Burnup Fuel.

1.9 Other Applicable Federal Requirements

Atomic Energy Act of 1954, as amended – The Atomic Energy Act of 1954, as amended, provides fundamental jurisdictional authority to the DOE and the NRC over governmental and commercial use of nuclear materials. This Act ensures proper management, production, possession, and use of radioactive materials. To comply with the Act, the NRC has established requirements published in Title 10 of the *Code of Federal Regulations*.

This Act gives the NRC authority to regulate the possession, transfer, storage, and disposal of nuclear materials, as well as aspects of transportation packaging design for radioactive materials that include testing for packaging certification. This Act gives the EPA the authority to develop standards for the protection of the environment and public health from radioactive material.

National Environmental Policy Act of 1969, as amended – The NRC has prepared this GEIS in accordance with the NRC's implementing regulations for NEPA (10 CFR Part 51).

Energy Reorganization Act of 1974, as amended – The Energy Reorganization Act of 1974 (Act of 1974), as amended, established the NRC. Under the Atomic Energy Act of 1954, a single agency, the Atomic Energy Commission, had responsibility for the development and production of nuclear weapons and for both the development and the safety regulation of the civilian uses of nuclear materials. The Act of 1974 split these functions, assigning to one

agency, now the DOE, the responsibility for the development and production of nuclear weapons, promotion of nuclear power, and other energy-related work, and assigning to the NRC the regulatory work, which does not include regulation of defense nuclear facilities. The Act of 1974 gave the Commission its collegial structure and established its major offices. The later amendment to the Act of 1974 also provided protections for employees who identify nuclear safety concerns.

Nuclear Waste Policy Act of 1982, as amended – The Nuclear Waste Policy Act provides for the research and development of repositories for the disposal of high-level radioactive waste, spent fuel, and low-level radioactive waste. The Act assigns responsibility for the construction of a deep geologic repository to the DOE.

Administrative Procedure Act of 1946, as amended – The Administrative Procedure Act is the fundamental law governing the processes of Federal administrative agencies. It requires, for example, that affected persons be given adequate notice of proposed rules and an opportunity to comment on the proposed rules. This Act gives interested persons the right to petition an agency for the issuance, amendment, or repeal of a rule. It also provides standards for judicial review of agency actions.

The Administrative Procedure Act has been amended often and now incorporates several other acts. Three of these incorporated acts deal with access to information: The Freedom of Information Act, The Government in the Sunshine Act, and The Privacy Act. The Freedom of Information Act requires that agencies make public their rules, adjudicatory decisions, statements of policy, instructions to staff that affect a member of the public, and, upon request, other material that does not fall into one of the act's exceptions for material dealing with national security, trade secrets, and other sensitive information. The Government in the Sunshine Act requires that collegial bodies such as the Commission hold their meetings in public, with certain exceptions for meetings on matters such as national security. The Privacy Act limits release of certain information about individuals.

Two other incorporated acts are noteworthy: The Regulatory Flexibility Act and The Congressional Review Act. The Regulatory Flexibility Act requires that agencies consider the special needs and concerns of small entities in conducting rulemaking. The Congressional Review Act requires that every agency rule be submitted to Congress before being made effective, and that, before being made effective, every "major" rule sit before Congress for 60 days, during which time the rule can be subjected to an accelerated process that can lead to a statutory modification or disapproval of the rule.

1.10 References

10 CFR Part 50. *Code of Federal Regulations*, Title 10, *Energy,* Part 50, "Domestic Licensing of Production and Utilization Facilities." Washington, D.C.

10 CFR Part 51. *Code of Federal Regulations*, Title 10, *Energy,* Part 51, "Environmental Protection Regulations for Domestic Licensing and Related Regulatory Functions." Washington, D.C.

10 CFR Part 52. *Code of Federal Regulations*, Title 10, *Energy,* Part 52, "Licenses, Certifications, and Approvals for Nuclear Power Plants." Washington, D.C.

10 CFR Part 72. *Code of Federal Regulations*, Title 10, *Energy,* Part 72, "Licensing Requirements for the Independent Storage of Spent Nuclear Fuel, High-Level Radioactive Waste, and Reactor-Related Greater Than Class C Waste." Washington, D.C.

40 CFR Parts 1500 through 1508. *Code of Federal Regulations*, Title 40, *Protection of Environment*, Parts 1500 "Purpose, Policy, and Mandate" through 1508 "Terminology and Index." Washington, D.C.

42 FR 34391. July 5, 1977. "Denial of Petition for Rulemaking." *Federal Register,* U.S. Nuclear Regulatory Commission, Washington, D.C.

44 FR 61372. October 25, 1979. "Storage and Disposal of Nuclear Waste." *Federal Register*, U.S. Nuclear Regulatory Commission, Washington, D.C.

49 FR 34658. August 31, 1984. "Waste Confidence Decision and Requirements for Licensee Actions Regarding the Disposition of Spent Fuel Upon Expiration of Reactor Operating Licenses; Final Rules." *Federal Register*, U.S. Nuclear Regulatory Commission, Washington, D.C.

49 FR 34688. August 31, 1984. "Waste Confidence Decision." *Federal Register*, U.S. Nuclear Regulatory Commission, Washington, D.C.

55 FR 38472. September 18, 1990. "Consideration of Environmental Impacts of Temporary Storage of Spent Fuel After Cessation of Reactor Operation; and Waste Confidence Decision Review; Final Rules." *Federal Register*, U.S. Nuclear Regulatory Commission, Washington, D.C.

55 FR 38474. September 18, 1990. "Waste Confidence Decision Review." *Federal Register*, U.S. Nuclear Regulatory Commission, Washington, D.C.

64 FR 68005. December 6, 1999. "Waste Confidence Decision Review: Status." *Federal Register*, U.S. Nuclear Regulatory Commission, Washington, D.C.

74 FR 66589. December 16, 2009. "Draft Technical Basis for Rulemaking Revising Security Requirements for Facilities Storing SNF and HLW; Notice of Availability and Solicitation of Public Comments." *Federal Register*, U.S. Nuclear Regulatory Commission, Washington D.C.

75 FR 81032. December 23, 2010. "Consideration of Environmental Impacts of Temporary Storage of Spent Fuel After Cessation of Reactor Operation; Waste Confidence Decision Update; Final Rules." *Federal Register*, U.S. Nuclear Regulatory Commission, Washington, D.C.

75 FR 81037. December 23, 2010. "Waste Confidence Decision Update." *Federal Register*, U.S. Nuclear Regulatory Commission, Washington, D.C.

77 FR 63254. October 16, 2012. "Petition for Rulemaking Submitted by C-10 Research and Education Foundation, Inc." *Federal Register*, U.S. Nuclear Regulatory Commission, Washington, D.C.

77 FR 65137. October 25, 2012. "Consideration of Environmental Impacts of Temporary Storage of Spent Fuel After Cessation of Reactor Operation." *Federal Register*, U.S. Nuclear Regulatory Commission, Washington, D.C.

78 FR 56695. September 13, 2013. "Environmental Impacts Statements; Notice of Availability." *Federal Register*, U.S. Environmental Protection Agency, Washington, D.C.

78 FR 66858. November 7, 2013. "Waste Confidence—Continued Storage of Spent Nuclear Fuel." *Federal Register*, U.S. Nuclear Regulatory Commission, Washington, D.C.

Administrative Procedures Act, as amended. 5 USC 500, *et seq*.

Atomic Energy Act of 1954, as amended. 42 USC 2011 *et seq*.

Congressional Review Act. 5 USC 801–808.

DOE (U.S. Department of Energy). 2008. *Final Supplemental Environmental Impact Statement for a Geologic Repository for the Disposal of Spent Nuclear Fuel and High-Level Radioactive Waste at Yucca Mountain, Nye County, Nevada*. DOE EIS–0250F–S1, Office of Civilian Radioactive Waste Management, Las Vegas, Nevada. Accession No. ML081750212.

DOE (U.S. Department of Energy). 2013. *Strategy for the Management and Disposal of Used Nuclear Fuel and High-Level Radioactive Waste*. Washington, D.C. Accession No. ML13011A138.

Energy Reorganization Act of 1974, as amended. 42 USC 5801 *et seq*.

Freedom of Information Act. 5 USC 552.

Government in the Sunshine Act of 1976. 5 USC 552b.

Minnesota v. NRC (*U.S. Nuclear Regulatory Commission).* 602 F.2d 412 (D.C. Cir. 1979).

National Environmental Policy Act of 1969 (NEPA), as amended. 42 USC 4321 et seq.

New York v. NRC (*State of New York et al. v. U.S. Nuclear Regulatory Commission)*. 681 F.3d 471 (D.C. Cir. 2012). Accession No. ML12191A407.

NRC (U.S. Nuclear Regulatory Commission). 1984. *Environmental Assessment for 10 CFR Part 72 "Licensing Requirements for the Independent Spent Fuel and High-Level Radioactive Waste."* NUREG–1092, Washington, D.C. ML091050510.

NRC (U.S. Nuclear Regulatory Commission). 1989. *Environmental Assessment and Finding of No Significant Impact for Proposed Rule Entitled, "Storage of Spent Nuclear Fuel in NRC-Approved Storage Casks at Nuclear Power Reactor Sites.*" Washington, D.C. Accession No. ML051230231.

NRC (U.S. Nuclear Regulatory Commission). 1997. *Generic Environmental Impact Statement in Support of Rulemaking on Radiological Criteria for License Termination of NRC-Licensed Nuclear Facilities: Final Report.* NUREG–1497, Volume 1, Washington, D.C. Accession No. ML042310492.

NRC (U.S. Nuclear Regulatory Commission). 2001. *Final Environmental Impact Statement for the Construction and Operation of an Independent Spent Nuclear Fuel Storage Installation on the Reservation of the Skull Valley Band of Goshute Indians and Related Transportation Facility in Tooele County, Utah.* NUREG–1714, Volume 1, Washington, D.C. Accession No. ML020150170.

NRC (U.S. Nuclear Regulatory Commission). 2002. *Final Generic Environmental Impact Statement on Decommissioning of Nuclear Facilities Supplement 1 Regarding the Decommissioning of Nuclear Power Reactors Main Report*. NUREG–0586, Supplement 1, Volume 1, Washington, D.C. Accession No. ML023470323.

NRC (U.S. Nuclear Regulatory Commission). 2003. *Environmental Review Guidance for Licensing Actions Associated with NMSS Programs: Final Report*. NUREG–1748, Washington, D.C. Accession No. ML032450279.

NRC (U.S. Nuclear Regulatory Commission). 2012a. Memorandum and Order dated August 7, 2012, regarding "Petition to Suspend Final Decision on All Pending Reactor Licensing

Proceedings." Commission Order CLI–12–16, Washington, D.C. Accession No. ML12220A094.

NRC U.S. Nuclear Regulatory Commission). 2012b. Memorandum from A.L. Vietti-Cook to R.W. Borchardt, dated September 6, 2012, regarding "Staff Requirements—COMSECY–12-0016—Approach for Addressing Policy Issues Resulting from Court Decision to Vacate Waste Confidence Decision and Rule." SRM–COMSECY–12–0016, Washington, D.C. Accession No. ML12250A032.

NRC (U.S. Nuclear Regulatory Commission). 2012c. Memorandum from R.W. Borchardt to Chairman Mcfarlane and Commissioners Svinicki, Apostolakis, Magwood, and Ostendorff, dated July 9, 2012, regarding "Approach for Addressing Policy Issues Resulting from Court Decision to Vacate Waste Confidence Decision and Rule." COMSECY-12-0016, Washington, D.C. Accession No. ML12180A424.

NRC (U.S. Nuclear Regulatory Commission). 2012d. *Program Plans for Tier 3 Recommendations*. SECY-12-0095, Washington, D.C. Accession Nos. ML12208A208 (SECY); ML12165A092 (Enclosure 1); ML12165A093 (Enclosure 2); ML12208A210 (Enclosure 3).

NRC (U.S. Nuclear Regulatory Commission). 2012e. *Summary of Public Scoping Meetings for Environmental Impact Statement to Support Waste Confidence Rulemaking*. Washington, D.C. Accession No. ML12339A281.

NRC (U.S. Nuclear Regulatory Commission). 2012f. *Summary of Public Scoping Webinars for the Environmental Impact Statement to Support the Waste Confidence Rulemaking*. Washington, D.C. Accession No. ML12356A293.

NRC (U.S. Nuclear Regulatory Commission). 2013a. "NRC Staff's Evaluation of Public and Stakeholder Comments on the Draft Regulatory Basis for a Rulemaking Revising Security Requirements for Facilities Storing SNF and HLW." Washington, D.C. Accession No. ML13085A150.

NRC (U.S. Nuclear Regulatory Commission). 2013b. "Staff Evaluation and Recommendation for Japan Lessons-Learned Tier 3 Issue on Expedited Transfer of Spent Fuel." Washington, D.C. Accession Nos. ML13273A601, ML13273A628.

NRC (U.S. Nuclear Regulatory Commission). 2013c. *Waste Confidence Generic Environmental Impact Statement Scoping Process Summary Report.* Washington, D.C. Accession No. ML13060A128.

NRC (U.S. Nuclear Regulatory Commission). 2013d. *Generic Environmental Impact Statement for License Renewal of Nuclear Plants*. NUREG–1437, Revision 1, Washington, D.C. Accession No. ML13107A023.

NRC (U.S. Nuclear Regulatory Commission). 2014a. Memorandum from R.C. Bavol to M.A. Satorius dated May 23, 2014, "Staff-Requirements—COMSECY-13-0300—Staff Evaluation and Recommendation for Japan Lessons-Learned Tier 3 Issue on Expedited Transfer of Spent Fuel." Washington, D.C. Accession No. ML14143A360.

NRC (U.S. Nuclear Regulatory Commission). 2014b. *Comments on the Waste Confidence Draft Generic Environmental Impact Statement and Proposed Rule*. Washington, D.C. Accession No. ML1415A175.

NRDC v. NRC (*Natural Resources Defense Council v. U.S. Nuclear Regulatory Commission*). 582 F.2d 166 (2d Cir. 1978).

Nuclear Waste Policy Act of 1982, as amended. 42 USC 10101 *et seq.*

Privacy Act of 1974. 5 USC 552a.

Regulatory Flexibility Act of 1981. 5 USC 601–612.

2.0 Generic Facility Descriptions and Activities

This chapter describes typical facility characteristics and activities that are within the scope of this GEIS. The U.S. Nuclear Regulatory Commission (NRC) relied upon available information for facilities and activities similar to those described in this chapter to assess environmental impacts that may occur from continued storage of spent nuclear fuel (spent fuel) beyond the licensed life for operation of a reactor (continued storage).

2.1 Generic Facility Descriptions

Most commercial spent fuel is stored at reactor sites in spent fuel pools and at-reactor independent spent fuel storage installations (ISFSIs). Some commercial spent fuel is stored under NRC regulatory oversight at away-from-reactor ISFSIs such as the GE-Hitachi Nuclear Energy Americas, LLC, Morris wet storage facility in Morris, Illinois, (GEH Morris) and the U.S. Department of Energy's (DOE) Three Mile Island, Unit 2, Fuel Debris ISFSI at the Idaho National Engineering Laboratory.[1,2] The remainder of the commercial spent fuel has either been reprocessed at the former Nuclear Fuel Services reprocessing facility in western New York State or removed from reactor sites by the DOE, or its predecessor agencies, and is no longer regulated by the NRC. The spent fuel addressed by the generic analysis in this generic environmental impact statement (GEIS) is the commercial spent fuel regulated by the NRC. Spent fuel or commercial high-level waste derived from reprocessing of spent fuel under the control of other agencies of the Federal government is not included in this generic analysis. Additional information on the scope of this GEIS is presented in Chapter 1.

The following sections provide generic descriptions of NRC-licensed facilities that store commercial spent fuel, with an emphasis on characteristics relevant to continued storage. These descriptions provide physical context for the generic activities described in Section 2.2. In addition, this section provides construction costs for continued storage facilities, as well as costs (e.g., rail spurs) for transporting spent fuel to an away-from-reactor ISFSI during

[1] The DOE holds three ISFSI licenses from the NRC: (1) the Fort St. Vrain at-reactor ISFSI in Platteville, Colorado; (2) the away-from-reactor Three Mile Island ISFSI; and (3) the yet-to-be-constructed away-from-reactor Idaho Spent Fuel Facility.

[2] In 2006, the NRC granted a license to Private Fuel Storage, LLC (PFS), to construct and operate an away-from-reactor ISFSI in Skull Valley, Utah. PFS has not constructed the proposed ISFSI. See Section 2.1.3 for additional information regarding this project.

continued storage (analyzed in Chapter 5). The estimated costs presented in this chapter are expressed in 2014 dollars.[3]

2.1.1 At-Reactor Continued Storage Site Descriptions

The following sections describe the general characteristics of at-reactor continued storage sites, which are identical to nuclear power plant sites.

2.1.1.1 General Description of Single-Unit Nuclear Power Plant Site

This section describes a generic single-unit nuclear power plant site, which is where continued storage will occur in spent fuel pools and at-reactor ISFSIs. Key differences between a single-unit site and multiple-unit site, relevant to continued storage, are described in Section 2.1.1.2.

A nuclear power plant site, including its associated ISFSI, contains a number of buildings or structures. Among them are a containment building or reactor building, turbine building, auxiliary building, vent stacks, meteorological towers, and cooling systems (which may include cooling towers). A nuclear power plant also includes large parking areas, security fencing, switchyards, water-intake and -discharge facilities, and transmission lines.[4] While reactor, turbine, and auxiliary buildings are often clad or painted in colors that are intended to reduce or mitigate their visual presence, the heights of many of the structures, coupled with safety lights, make power plants visible from many directions and from great distances. Typical heights of structures found on these facilities are as follows: reactor buildings are 90 m (300 ft), turbine buildings are 30 m (100 ft), stacks are 90 m (300 ft), meteorological towers are 60 m (200 ft), natural draft cooling towers are higher than 150 m (500 ft), and mechanical draft cooling towers

---

[3] Estimated costs from sources older than 2014 are adjusted to 2014 dollars following the Bureau of Labor Statistics (BLS) inflation calculator method (BLS 2014a), which uses the annual average Consumer Price Index (CPI) for a given year. The BLS CPI inflation calculator uses the following formula:

$$\text{2014 cost} = \left(\frac{\text{March 2014 CPI}}{\text{year "X" annual average CPI}}\right)\text{year "X" cost}$$

The following annual average CPI values (BLS 2014b) were used to calculate estimated costs in 2014 dollars in this chapter: 236.293 (March 2014), 229.594 (2012), 218.056 (2010), 214.537 (2009), 188.9 (2004), and 152.4 (1995). The NRC recognizes that the CPI may not fully capture the changes in costs for various construction, operation, design, procurement, and licensing activities; however, using the CPI provides the NRC with a means of developing more comparable estimates than using non-adjusted figures from disparate years.

[4] The term “power block” is sometimes used to refer to the buildings and components directly involved in generating electricity at a power plant. At a nuclear power plant, the components of the power block vary with the reactor design, but always include the reactor and turbine building, and usually include several other buildings that house access, reactor auxiliary, safeguards, waste processing, or other nuclear generation support functions.

are 30 m (100 ft) tall. Transmission-line towers are between 20 and 50 m (70 and 170 ft) in height, depending on the voltage being carried (NRC 2013a).

There are two types of power reactors currently in use in the United States—boiling water reactors (BWRs) and pressurized water reactors (PWRs). In general, all nuclear power plant sites, when operating, are similar in terms of the types of onsite structures; however, the layout of buildings and structures varies considerably among the sites. In addition, while these buildings and structures are necessary during operations, many of the structures may be removed, mothballed, or entombed as a result of the decommissioning process, depending on several factors, including the decommissioning option licensees choose and other operational considerations. Many of these structures will be present at the beginning of continued storage analyzed in this GEIS. As decommissioning of the reactor facility progresses, the number of onsite structures will decline until only continued storage-related structures are present at the beginning of the long-term storage timeframe. The following list describes typical structures located on most sites following the permanent cessation of reactor operations (NRC 2013a):

- *Containment or reactor building*. The containment or reactor building of a PWR is a massive concrete or steel structure that houses the reactor vessel, reactor coolant piping and pumps, steam generators, pressurizer, pumps, and associated piping. In general, the reactor building of a BWR includes a containment structure and a shield building. The reactor-containment building is a massive steel and concrete structure that houses the reactor vessel, the reactor coolant piping and pumps, and the suppression pool. It is located inside a shield building.
- *Fuel building*. For PWRs, the fuel building has a fuel pool that is used to store and service spent fuel and prepare new fuel for insertion into the reactor. This building is connected to the reactor-containment building by a transfer tube or channel that is used to move new fuel into the reactor and move spent fuel out of the reactor for storage. For plants with a BWR/6 reactor, spent fuel is stored in an adjacent Fuel Building or Fuel-Handling Building.
- *Turbine building*. The turbine building houses the turbine generators, condenser, feedwater heaters, condensate and feedwater pumps, waste-heat rejection system, pumps, and equipment that support those systems.
- *Auxiliary buildings*. Auxiliary buildings house support systems (e.g., the ventilation system, emergency core cooling system, laundry facilities, water treatment system, and waste treatment system). An auxiliary building may also contain the emergency diesel generators and, in some PWRs, the diesel fuel storage facility.
- *Diesel generator building*. Often a separate building houses the emergency diesel generators if they are not located in the auxiliary building.
- *Pump houses*. Various pump houses for circulating water, standby service water, or makeup water may be onsite.

- *Cooling towers*. Cooling towers are structures designed to remove excess heat from the condenser without dumping the heat directly into waterbodies (e.g., lakes or rivers). The two principal types of cooling towers are mechanical draft towers and natural draft towers. Most nuclear plants with once-through cooling do not have cooling towers. However, seven facilities with once-through cooling also have cooling towers that are used to reduce the temperature of the water before it is released to the environment.
- *Radwaste facilities*. Radioactive waste facilities may be contained in an auxiliary building or located in a separate radwaste building.
- *Ventilation stack*. Many older nuclear power plants, particularly BWRs, have ventilation stacks to discharge gaseous waste effluents and ventilation air directly to the outside. These stacks can be 90 m (300 ft) tall or higher and contain monitoring systems to ensure that radioactive gaseous discharges are below fixed release limits.
- *Switchyard and transmission lines*. Facilities typically contain a large switchyard that connects the site to the regional power distribution system.
- *Administrative, training, and security buildings*. In most cases, administrative, training, and security buildings are located outside the protected area of the plant.
- *Independent spent fuel storage installations*. An ISFSI is designed and constructed for the interim storage of spent fuel pending permanent disposal. ISFSIs are used by operating plants to add spent fuel storage capacity beyond that available in spent fuel pools.

Nuclear power plant facilities are large industrial complexes with land-use requirements generally amounting to 40 to 50 ha (100 to 125 ac) for the reactor-containment building, auxiliary buildings, cooling system structures, administration and training offices, and other facilities (e.g., switchyards, security facilities, and parking lots). Areas disturbed during construction of the power plant generally have been returned to prior uses or were ecologically restored when construction ended. Site areas range from 34 ha (84 ac) for the San Onofre plant in California to 5,700 ha (14,000 ac) for the Clinton plant in Illinois. Almost 60 percent of plant sites encompass 200 to 800 ha (500 to 2,000 ac), with 28 site areas ranging from 200 to 400 ha (500 to 1,000 ac) and an additional 12 sites encompassing 400 to 800 ha (1,000 to 2,000 ac). Larger land areas are often associated with elaborate man-made closed-cycle cooling systems that include cooling lagoons, spray canals, reservoirs, artificial lakes, and buffer areas (NRC 2013a).

Nuclear power plant sites are located in a range of political jurisdictions, including towns, townships, service districts, counties, parishes, and states. Typically, the nearest resident lives about 0.4 km (0.25 mi) from a nuclear power plant. At more than 50 percent of the sites, the population density within an 80-km (50-mi) radius is fewer than 77 persons/km^2 (200 persons/mi^2), and at more than 80 percent of the sites, the density within 80 km (50 mi) is fewer than 193 persons/km^2 (500 persons/mi^2). The largest population density is around the Indian Point Nuclear Generating Station in upper Westchester County, New York, which has a

population density within 80 km (50 mi) of more than 825 persons/km^2 (2,138 persons/mi^2). Within the 80-km (50-mi) radius, State, Federal, and Native American lands are present to various extents (NRC 2013a).

The nuclear power plant structures that are used for continued storage of spent fuel, namely spent fuel pools and at-reactor ISFSIs, are described in more detail in Section 2.1.2 of this GEIS. Power plant-specific data on spent fuel pools and ISFSIs is provided in Appendix G of this GEIS. As shown in Appendix G, spent fuel pool licensed capacities at single-unit PWR power plants range from 544 assemblies at H.B. Robinson Steam Electric Plant, Unit 2, to 2,363 assemblies at the Callaway Plant and Wolf Creek Generating Station. At BWR plants, spent fuel pool capacities range from 1,803 assemblies at the Brunswick Steam Electric Generating plant to 4,608 assemblies at Fermi Unit 2.

2.1.1.2 General Description of Multiple-Unit Nuclear Power Plant Sites

During continued storage at a multiple-unit site, other onsite reactors may be in different stages of their life cycles: under construction; operating; or decommissioning. Subject to NRC regulations that ensure independence of safety systems, multiple reactors may share systems, structures, and components (e.g., a spent fuel pool). Existing nuclear power plants with shared spent fuel pools are summarized in Table 2-1. Dresden Units 2 and 3 and Comanche Peak Units 1 and 2 do not share a pool, but have two pools in one structure. Other common structures at multiple-unit sites include cooling system infrastructure, switchyards, and ISFSIs (Sailor et al. 1987).

As noted in the Decommissioning GEIS (NRC 2002a), licensees that choose to shut down one reactor at a multi-reactor site usually choose a decommissioning option that allows the shutdown reactor to be placed in a safe, stable condition (SAFSTOR) and maintained in that state until the other reactors shut down, so that all reactors at a site can be decommissioned simultaneously.[5] In these cases, a licensee may opt to store spent fuel in the shutdown reactor's spent fuel pool until all reactors undergo decommissioning. Alternatively, the licensee may transfer some or all of the spent fuel in the shutdown reactor's spent fuel pool to spent fuel pools for the other operating reactors or to an at-reactor or away-from-reactor ISFSI, and begin some dismantlement activities in the shutdown reactor's spent fuel pool. As discussed in Chapter 1, the NRC assumes that, in compliance with current decommissioning requirements, all of a reactor's spent fuel will have been removed from the spent fuel pool within 60 years after the end of the reactor's licensed life for operation.

[5] See Section 2.2 below for a description of the SAFSTOR option.

Table 2-1. U.S. Pressurized Water Reactors with Shared Spent Fuel Pools

Power Plant[(a)]	Shared Pool Capacity Assemblies (cores)
Braidwood	2,984 (13.5)
Byron	2,984 (13.5)
Calvert Cliffs	1,830 (8.4)
D.C. Cook	3,613 (18.7)
North Anna	1,737 (11.1)
Oconee[(b)]	1,312 (7.4)
Point Beach	1,502 (12.4)
Prairie Island	1,582 (13.1)
Sequoyah	2,091 (10.8)
Surry	1,044 (6.6)
Watts Bar[(c)]	1,386 (7.2)
Zion[(d)]	3,012 (15.6)

(a) Source: Individual plant operating licenses or safety evaluation reports, www.nrc.gov.
(b) Oconee Units 1 and 2 share a pool. Unit 3 has a separate pool.
(c) Watts Bar Unit 1 will share a pool with Unit 2, which is not yet operational.
(d) Zion Units 1 and 2 were permanently shut down on February 13, 1998.

2.1.1.3 Reactor and Fuel Technologies

Several commercial reactor designs have been built and operated in the United States. As described below, the generic analysis in this GEIS is focused on past, present, and future spent fuel types that will be subject to a future NRC licensing action. These fuel types, discussed in more detail below, include: fuel types that have been used in the past and continue to be stored under an NRC license; fuel types that are presently used; and fuel types for which the characteristics are similar to fuel used today, are well understood, and may be used in the near future. See Appendix I, High-Burnup Fuel, for additional information regarding spent fuel.

Light Water Reactors

The majority of reactors that have been licensed for commercial operation in the United States, including the currently operating nuclear power plants and those under construction, are light water reactors. Light water reactors use ordinary water as coolant and a neutron moderator to initiate and control the nuclear reaction. The two light water reactor designs in use are PWRs and BWRs. There are 65 PWRs and 35 BWRs operating in the United States today.[6] This is

[6] The licensee for the Vermont Yankee Nuclear Power Station has informed the NRC that the plant will permanently cease operations at the end of the current operating cycle, estimated to be in the fourth calendar quarter of 2014 (Entergy 2013). Vermont Yankee is included in the current count because it is still operating.

important for the generic analysis of continued storage because these reactors all use similar fuel, which allows the NRC to generically consider the environmental impacts of continuing to store spent fuel after the licensed life for operation of a reactor.

> ***Enrichment**: Enriching uranium increases the proportion of uranium atoms that can be "split" by fission to release energy (usually in the form of heat) that can be used to produce electricity.*

The nuclear fuel typically used in both types of reactors is uranium enriched to a concentration of 2 to 5 percent of the uranium-235 isotope. The fuel is in the form of cylindrical uranium dioxide (UO_2) pellets, approximately 1 cm (0.4 in) in diameter and 1 to 1.5 cm (0.4 to 0.6 in) in height. The fuel pellets are stacked and sealed inside a hollow cylindrical fuel rod made of zirconium alloy. As described further below, a small amount of stainless-steel-clad fuel was used in the past and is still being stored under NRC licenses. Fuel rods are approximately 4.3 m (14 ft) long. They are bundled into fuel assemblies that generally consist of 15 × 15 or 17 × 17 rods for PWRs and 8 × 8 or 10 × 10 rods for BWRs. For PWRs, there are typically 150 to 200 fuel assemblies, containing between 179 and 264 fuel rods per assembly, loaded into the core when operating. For BWRs, there are typically between 370 and 800 fuel assemblies, containing between 62 and 96 fuel rods per assembly, loaded into the core when operating. The mass of uranium fuel in a typical light water reactor core is approximately 100 MTU.

As shown in Table 2-2, fuel with stainless-steel cladding was used at five plants that are all shut down. LaCrosse was the last decommissioning plant to transfer its stainless-clad fuel from its pool into an at-reactor dry storage ISFSI in September 2012 (UxC 2013). Some of the Haddam Neck and San Onofre Unit 1 stainless-clad fuel is stored at the GEH Morris away-from-reactor ISFSI and the remainder is in at-reactor dry storage. The continued storage of this fuel is an NRC-licensed activity.

Table 2-2. Stainless-Steel-Clad Fuel at Decommissioning Plants

Plant	Discharged Stainless-Clad Assemblies[(a)]	Stored at GEH Morris ISFSI[(b)]
Haddam Neck	945[(c)]	82
Indian Point Unit 1	160	---
LaCrosse	333	---
San Onofre Unit 1	665	270
Yankee Rowe	76	---
Total	**2,179**	**352**

Sources:
(a) EIA 1994.
(b) NRC 2004a.
(c) S. Cohen & Associates, Inc. 1998.

The amount of spent fuel accumulated at a reactor over its licensed life depends on factors such as how long the reactor operates each year, the duration of outages, spent fuel burnup, and operating lifetime. For purposes of analysis in this GEIS, the NRC assumes reactors operate with high capacity factors and short outages, which results in the generation of more spent fuel.

Spent fuel burnup describes the extent to which energy has been extracted from nuclear fuel and is one factor in how often a reactor's fuel needs to be replaced. Burnup is the actual energy released per mass of initial fuel in GWd/MTU. Spent fuel is considered to have low burnup if the burnup is less than 45 GWd/MTU. At low burnups, about one-fourth to one-third of the spent fuel assemblies are removed from the reactor and replaced every 12 to 18 months. Therefore, the amount of spent fuel discharged from a typical light water reactor operating at low burnups is about 20 MTU per year. After 80 years of reactor operation at low burnups, this amounts to about 1,600 MTU of spent fuel. A reactor could operate for 80 years if the licensee requested, and the NRC granted, two 20-year renewals of its initial 40-year operating license.

Currently, the average discharge burnup for PWRs and BWRs is approximately 48 and 43 GWd/MTU, respectively (EPRI 2012). By 2020 it is projected that the maximum discharge burnups for PWRs and BWRs will be 55 and 48 GWd/MTU, respectively (EPRI 2012). The current trend toward extended irradiation cycles and higher fuel enrichments of up to 5 weight percent uranium-235 has led to an increase of the burnup range for discharged nuclear fuel assemblies in the United States that is expected to eventually exceed 60 GWd/MTU. For plants at which higher fuel burnups are authorized, the period between outages may be extended to 24 months and the annual discharge of spent fuel reduced to about 15 MTU per year. Should a nuclear power plant operate for up to 80 years with high-burnup fuel, it would generate about 1,200 MTU of spent fuel.

For purposes of analysis in this GEIS, the NRC relies on the larger reactor lifetime amount of spent fuel discharged at low burnups (i.e., 1,600 MTU). This is because many of the environmental impacts (e.g., land use, geology and soils, and terrestrial resources) will depend upon the greater amount of space needed to store the larger amounts of spent fuel that would be generated at low burnups. In cases where high-burnup fuel is a consideration in the impact determination, this is explained in the supporting analysis. Appendix I provides further discussion on the characteristics, storage, and transportation of high-burnup uranium oxide and mixed oxide (MOX) spent fuel.

Mixed Oxide Fuel

MOX fuel is a type of nuclear reactor fuel that contains plutonium oxide mixed with either natural or depleted uranium oxide in ceramic pellet form. Using plutonium reduces the amount of enriched uranium needed to produce a controlled reaction in commercial light water reactors. MOX fuel was produced and used in the United States prior to the mid-1970s; during that time, the United States reprocessed nuclear fuel and recovered plutonium for reuse as MOX fuel in

light water reactors. MOX fuel was used at Quad Cities, San Onofre, Big Rock Point, Dresden Unit 1 and, as recently as 2005–2008, Catawba Unit 1. Catawba Unit 1 used four MOX lead test assemblies that were part of a nonproliferation project conducted by the National Nuclear Security Administration. Because the MOX fuel is substantially similar to existing uranium oxide light water reactor fuel and was, in fact, used in existing light water reactors in the United States, it is within the scope of this GEIS.

MOX fuel is not currently being produced in the United States; however, an application is pending before the NRC for Shaw AREVA MOX Services (formerly Duke COGEMA Stone & Webster) to manufacture MOX fuel at the Mixed Oxide Fuel Fabrication Facility at the Savannah River Site in South Carolina as part of the National Nuclear Security Administration's ongoing nonproliferation project. The MOX fuel proposed to be manufactured by Shaw AREVA MOX Services is a blend of plutonium dioxide, extracted from retired nuclear weapons and other sources of surplus plutonium, and depleted uranium dioxide, which is a byproduct of the uranium enrichment process. Because the MOX fuel that would be generated at the Mixed Oxide Fuel Fabrication Facility is substantially similar to existing light water reactor fuel and is, in fact, intended for use in existing light water reactors in the United States, MOX fuel from this project is within the scope of this GEIS.

Integral Pressurized Water Reactors

The NRC is preparing to review a number of integral pressurized water reactor (iPWR) designs that are currently under development. An iPWR is a small modular reactor that uses light water reactor technology. Current iPWR designs employ light water reactor technology with current design fuel and secondary loop steam generators, but also incorporate a number of advanced features and characteristics (NRC 2012). The NRC is currently engaged in preapplication activities with several applicants for light water small modular reactors.

Because the light water reactor fuel that would be used in iPWR designs is substantially similar to existing light water reactor fuel (i.e., zirconium-clad, low-enriched uranium oxide pellets in square fuel rod arrays), it is within the scope of this GEIS.

Other Commercial Reactor and Fuel Designs

In addition to light water reactors, two other reactor technologies are sufficiently well developed to be deployed for use as commercial nuclear power plants: the high-temperature gas-cooled reactor and the liquid metal fast reactor. As described in more detail below, spent fuel generated by these technologies is not within the scope of the analysis in this GEIS, with the exception of high-temperature gas reactor fuel stored in the Fort Saint Vrain ISFSI, because neither technology is in commercial use or under development in the United States at this time.

High-Temperature Gas-Cooled Reactors

A high-temperature gas-cooled reactor is a type of nuclear fission reactor that typically operates at a very high temperature, is graphite-moderated, and uses an inert gas such as helium as its primary coolant. Fuel may be loaded in the core in a prismatic or pebble bed design. In the United States, there have been two high-temperature gas-cooled reactors built and commercially operated: Fort Saint Vrain and Peach Bottom Unit 1. Fort Saint Vrain has been decommissioned, and Peach Bottom Unit 1 is in the process of decommissioning. The Fort Saint Vrain spent fuel continues to be stored at an NRC-licensed ISFSI in Plattesville, Colorado, and is within the scope of this GEIS.[7] Peach Bottom Unit 1 fuel is under Federal government control at the Idaho National Laboratory and is not within the scope of this GEIS because it is no longer regulated by the NRC.

The NRC was participating in preapplication reviews of the DOE's Next Generation Nuclear Plant. The Next Generation Nuclear Plant would use nuclear fuel comprised of tristructural-isotropic-coated fuel particles contained in either fuel pebbles or prismatic fuel assemblies. The uranium oxycarbide kernels in each particle would be encapsulated in successive layers of silicon carbide and pyrolitic carbon.

Because this fuel type has not completed fuel qualification testing, it is not yet a commercially viable technology. If this technology should become viable and the NRC is asked to review one or more license applications for a high-temperature gas-cooled reactor facility, then the environmental impacts of continued storage of that spent fuel will be considered in individual licensing proceedings unless the NRC updates the GEIS and corresponding rule to include the environmental impacts of storing this type of fuel after a reactor's licensed life for operation.

Liquid Metal Fast Reactor

Liquid metal fast reactors use a molten metal (e.g., sodium) as their primary coolant. Fuel for a liquid metal fast reactor varies by concept, but typically consists of a mix of uranium and zirconium or a mix of uranium, plutonium, and zirconium. In the United States, Enrico Fermi Unit 1 was a liquid-sodium-cooled fast reactor that operated between 1963 and 1972. Fermi Unit 1 is in the process of decommissioning and all spent fuel has been removed from the site and is now the responsibility of the DOE.

The NRC is engaged in preliminary preapplication discussions with the designers of three liquid metal fast reactors—Toshiba Corporation's Super-Safe, Small, and Simple design; General Electric Hitachi's Power Reactor Innovative Small Module design; and Gen4 Energy's Gen4

[7] The NRC renewed the license for the Fort St. Vrain ISFSI in May 2011, after completing an environmental assessment and finding of no significant impact (76 FR 30399).

Module design. The fuel types in these designs range from a mix of uranium-zirconium or uranium-plutonium-zirconium metal alloys to stainless-steel-clad uranium nitride.

These fuel types have not completed fuel qualification testing and are not yet commercially viable technologies. If these technologies should become viable and the NRC is asked to review one or more license applications for a liquid metal fast reactor facility, then the environmental impacts of continued storage of that spent fuel will be considered in individual licensing proceedings unless the NRC updates the GEIS and corresponding rule to include the environmental impacts of storing this type of fuel after a reactor's licensed life for operation.

2.1.2 Onsite Spent Fuel Storage and Handling

As of the end of 2011, the amount of commercial spent fuel in storage at commercial nuclear power plants was an estimated 67,500 MTU. The amount of spent fuel in storage at commercial nuclear power plants is expected to increase at a rate of approximately 2,000 MTU per year (CRS 2012).

Licensees have designed spent fuel pools to temporarily store spent fuel in pools of continuously circulating water that cool the spent fuel assemblies and provide shielding from radiation. When the nuclear power industry designed the current fleet of operating nuclear power plants, it expected that, after a few years, the plant operators would transport spent fuel to one or more reprocessing plants. However, as a result of historic decision-making on reprocessing[8] no commercial spent fuel reprocessing facilities are currently operating or planned in the United States (Copinger et al. 2012).

2.1.2.1 Spent Fuel Pools

Spent fuel pools are designed to store and cool spent fuel following its removal from a reactor. Spent fuel pools are massive and durable structures constructed from reinforced-concrete walls and slabs that vary between 0.7 and 3 m (2 and 10 ft) thick. Typically, spent fuel pools are at least 12 m (40 ft) deep, allowing the spent fuel to be covered by at least 6 m (20 ft) of water, which provides adequate shielding from the radiation for anyone near the pool. All spent fuel pools currently in operation are lined with stainless-steel liners that vary in thickness from 6 to 13 mm (0.25 to 0.5 in.) (Copinger et al. 2012). Further, all spent fuel pools have either a leak-detection system or administrative controls to monitor the spent fuel pool liner. Typically, leak-detection systems are made up of several individually monitored channels or are designed

[8] In furtherance of anti-proliferation policies, the Federal government declared a moratorium on reprocessing spent fuel in 1976. This moratorium was lifted in 1981, but in 1993, President Clinton issued a policy statement that the United States does not encourage civil use of plutonium, including reprocessing. In 2001, President Bush's National Energy Policy encouraged research into reprocessing technologies. Currently, there is no Federal moratorium on reprocessing.

so that leaked water empties into monitored drains. Leaked water is directed to a sump, liquid radioactive waste treatment system, or other cleanup or collection system.

Reactor designers originally anticipated that spent fuel would be stored for less than 1 year before being shipped to a reprocessing plant for separation of the fissile isotopes. For this reason, currently operating reactors originally had storage capacity for one full core plus one or two additional discharged batches of spent fuel. When the United States abandoned spent fuel reprocessing and spent fuel pools began to fill up, licensees expanded fuel storage capacity by replacing the original storage racks with higher density fuel racks. Licensees achieved the higher density by taking into account in their safety assessments the neutron-absorbing characteristics of the stainless-steel structure of the storage racks and incorporating plates or sheets containing a neutron absorber material for reactivity control (EPRI 1988). As a result, a typical spent fuel pool at a light water reactor can hold the equivalent of about seven reactor core loads, or about 700 MTU (see Appendix G).

On this basis, a typical spent fuel pool has about 700 MTU storage capacity that reaches its licensed capacity limit in about 35 years into licensed life for operation of a reactor. At that point, some of the spent fuel would need to be removed from the spent fuel pool and transferred to a dry cask storage system at either an at-reactor or away-from-reactor ISFSI.

Spent fuel pools are constructed with the reactor, not during continued storage. Therefore, the cost of building a spent fuel pool facility is not included in this GEIS. However, operating the spent fuel pool is a continued storage activity, and those costs are presented in Section 2.2.1.2.

Two events have resulted in changes to NRC requirements for physical security and the safe operation of spent fuel pools. The first was the terrorist attacks on September 11, 2001, after which the NRC ordered all operating nuclear power plants to immediately implement compensatory security measures. In addition, the NRC issued Orders to decommissioning reactor licensees that imposed additional security measures associated with access authorization, fitness for duty, and behavior observation. In 2009, the NRC completed a rulemaking that codified generally applicable security requirements for operating power plants (74 FR 13926).

Second, in response to the March 11, 2011 severe earthquake and subsequent tsunami that resulted in extensive damage to the six nuclear power reactors at Japan's Fukushima Dai-ichi site, the NRC established a task force of senior agency experts (Near-Term Task Force). On July 12, 2011, the Near-Term Task Force issued its report, which concluded that there was no imminent risk from continued operation and licensing activities (NRC 2011a). Based on its analysis, the Near-Term Task Force made 12 overarching recommendations for changes to ensure the continued safety of U.S. nuclear power plants.

Several of these recommendations addressed spent fuel pool integrity and assurance of adequate makeup water in the event of a serious accident. In response to the Near-Term Task Force's recommendations, the NRC issued multiple Orders and a request for information to all of its operating power reactor licensees and holders of construction permits in active or deferred status on March 12, 2012. The Orders addressed (1) mitigating strategies for beyond-design basis external events and (2) reliable spent fuel pool instrumentation. In addition, the NRC issued the request for information to assist the agency in reevaluating seismic and flooding hazards at operating reactor sites and determining whether appropriate staffing and communication can be relied upon to coordinate event response during a prolonged station blackout event, as was experienced at Fukushima Dai-ichi. The NRC will use the information collected to determine whether to update the design basis and systems, structures, and components important to safety, including spent fuel pools. However, because the NRC has not yet decided whether any license needs to be modified, suspended, or revoked, for purposes of analysis in this GEIS, the NRC assumes that the related existing regulatory framework remains unchanged. Further, the NRC has initiated a rulemaking to address a condition known as station blackout, a situation that involves the loss of all onsite and offsite alternating current power at a nuclear power plant. The advance notice of proposed rulemaking was published on March 20, 2012 (77 FR 16175), and the draft regulatory basis was published on April 10, 2013 (78 FR 21275). Among other issues being considered as part of the rulemaking, the NRC is evaluating whether to require additional equipment (e.g., backup power supplies and instrumentation) to ensure the safety of spent fuel pools. Current information regarding the status of this proposed rule can be found on the regulations.gov website (www.regulations.gov) under Docket ID NRC-2011-0299.

2.1.2.2 At-Reactor Independent Spent Fuel Storage Installations

Spent fuel pools, as discussed above, have limited capacity to store a reactor's spent fuel. As noted, a typical spent fuel pool has a storage capacity of about 700 MTU that reaches its licensed capacity limit about 35 years into licensed life for operation of a reactor. At that point, the licensee needs a dry cask storage system to store older fuel that has cooled sufficiently and can be removed safely from the pool. These dry cask storage systems are located in ISFSIs at reactor sites and are licensed by the NRC. Dry cask storage systems shield people and the environment from radiation and keeps the spent fuel dry and nonreactive (NRC 2013b).

There are many different dry cask storage systems, but most fall into two main categories based on how they are loaded. The first is the bare fuel, or direct-load, casks, in which spent fuel is loaded directly into a basket that is integrated into the cask. Bare fuel casks, which tend to be all metal construction, are generally bolted closed. The second is a canister-based system in which spent fuel is loaded into a basket inside a cylinder called a canister. The canister is usually loaded while inside a transfer cask, then welded and transferred vertically into either a concrete or metal storage overpack or horizontally into a concrete storage module (e.g., NUHOMS) (Hanson et al. 2012). Typical dry cask storage systems are shown in Figure 2-1.

At some nuclear reactors across the country, spent fuel is kept onsite, typically above ground, in systems basically similar to the ones shown here.

1 Once the spent fuel has sufficiently cooled, it is loaded into special canisters that are designed to hold nuclear fuel assemblies. Water and air are removed. The canister is filled with inert gas, welded shut, and rigorously tested for leaks. It is then placed in a cask for storage or transportation. The NRC has approved the storage of up to 40 PWR assemblies and up to 68 BWR assemblies in each canister. The dry casks are then loaded onto concrete pads.

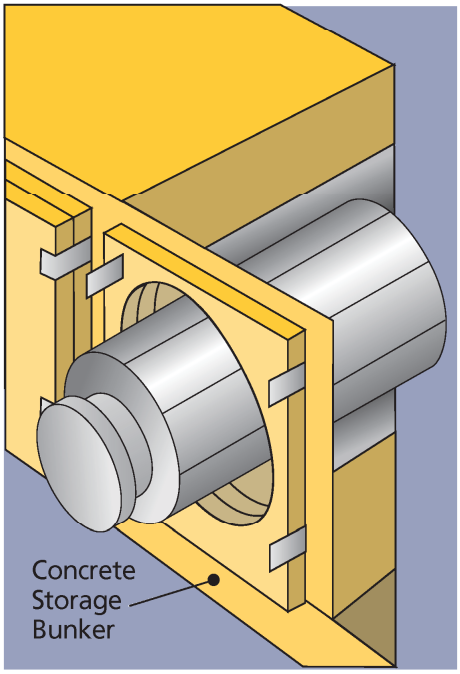

2 The canisters can also be stored in above ground concrete bunkers, each of which is about the size of a one-car garage.

Figure 2-1. Dry Storage of Spent Fuel (Source: NRC 2013b)

Dry cask storage systems are licensed by the NRC for storage only or for storage and transportation. Storage-only casks are not certified for transportation under 10 CFR Part 71, "Packaging and Transportation of Radioactive Material." Casks and canisters licensed for both storage and transportation are generally referred to as dual-purpose casks and dual-purpose canisters. Some vendors refer to their dual-purpose casks or canisters as "multipurpose" canisters, which implies that it would be suitable for storage, transportation, and disposal. However, in the absence of a repository program, there are no specifications for disposal canisters and, therefore, no dual-purpose casks or canisters have been certified as multipurpose (Hanson et al. 2012).

As of June 2014, there were operational ISFSIs at 64 sites. One operational ISFSI, at the GEH Morris site, is a wet storage facility. The remaining ISFSIs store spent fuel in over 1,900 loaded dry casks. Two licenses have been issued for ISFSIs, the PFS facility and the Idaho Spent Fuel Facility, neither of which have been constructed. Figure 2-2 shows the locations of U.S. ISFSIs. Information on ISFSIs is presented in Appendix G of this GEIS.

The NRC authorizes construction and operation of ISFSIs by general and specific licenses. A general license is created by regulation and confers the right upon the general licensee to proceed with the licensed activity without further review or approval by the NRC. A specific license, by contrast, requires an application to perform the licensed activity and NRC review and approval to proceed with the licensed activity.

As these concepts apply to ISFSIs, every nuclear power reactor licensee, by virtue of the general license in 10 CFR Part 72, Subpart K, is authorized to store spent fuel in casks whose design has been approved by the NRC. Licensees must evaluate the safety of using the approved casks at the ISFSI for site-specific conditions, including man-made and natural hazards, and must conform to all requirements under Subpart K for use of the approved design. In addition, licensees must review their programs for operating the reactor (e.g., physical security, radiation protection, and emergency planning) to determine if those programs are affected by use of the casks and, if so, to seek approval from the NRC for any necessary changes to those programs.

Further, a reactor licensee can seek a specific license to construct and operate an ISFSI, which requires NRC's review of the safety, environmental, and physical security aspects of the proposed facility and the licensee's financial qualifications. If the NRC concludes the proposed ISFSI meets licensing criteria, then the NRC grants the specific license. This license contains various conditions (e.g., leak testing and monitoring) and specifies the quantity and type of material the licensee is authorized to store at the site. A specific license runs for a term of up to 40 years and may be renewed in accordance with all applicable requirements.

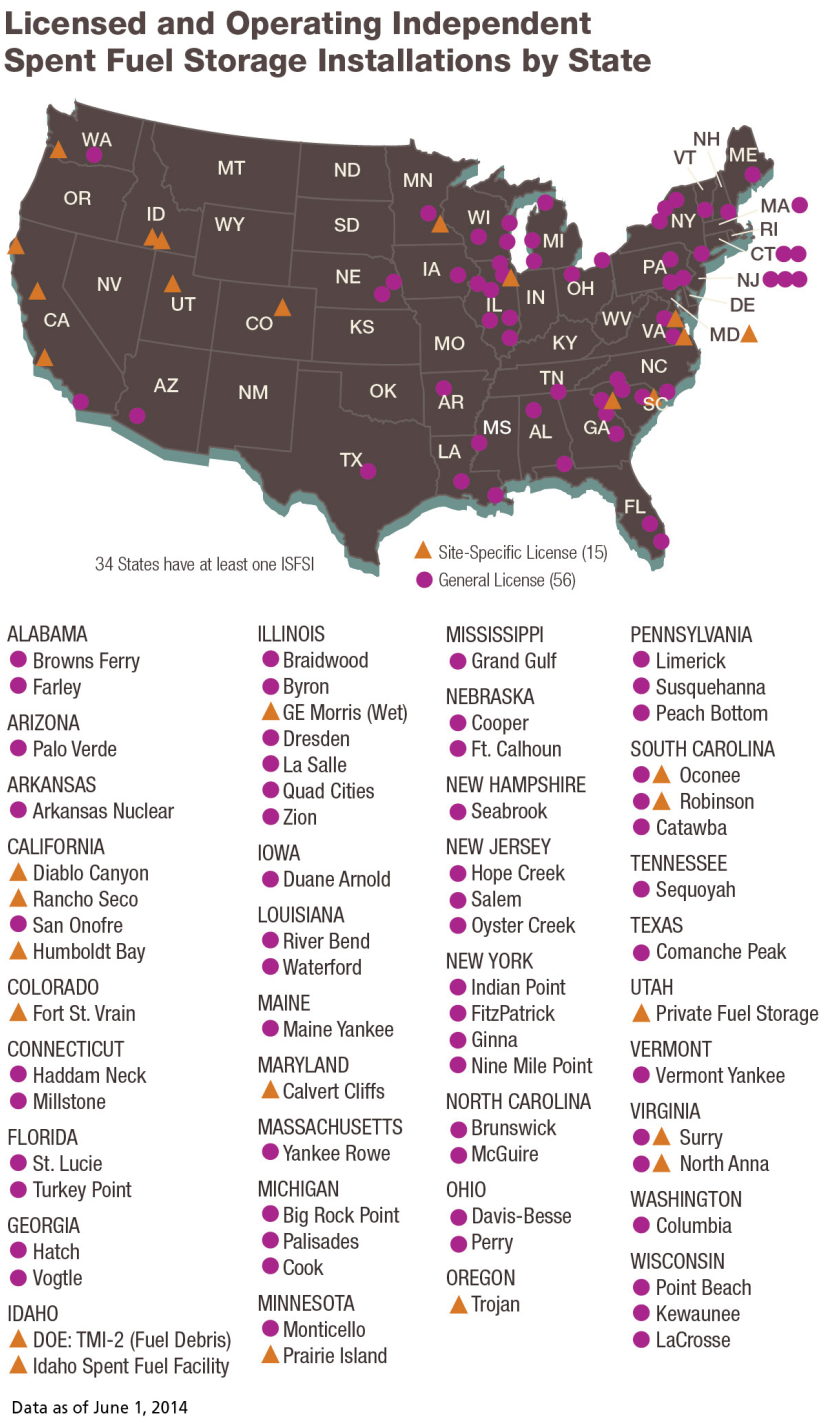

Figure 2-2. Licensed/Operating ISFSIs by State (Source: NRC 2014)

As described in more detail in Section 2.2.1, nuclear power plant licensees will undertake major decommissioning activities during the 60 years following permanent cessation of reactor operations. During major decommissioning activities, the licensees will transfer spent fuel from spent fuel pools to either an at-reactor or away-from-reactor ISFSI. When decommissioning of the reactor and related facilities is completed and the at-reactor ISFSI is the only spent fuel storage structure left onsite, the facility is referred to as an "ISFSI-only site." Existing ISFSI-only sites include Big Rock Point, Haddam Neck, Fort St. Vrain, Maine Yankee, Rancho Seco, Trojan, and Yankee Rowe.

The NRC requires licensees to develop spent fuel management plans that include specific consideration of a plan for removal of spent fuel stored under a general license, and spent fuel management before decommissioning systems and components needed for moving, unloading, and shipping spent fuel (10 CFR 50.54(bb) and 72.218).[9]

Construction of a replacement at-reactor ISFSI is a continued storage activity in the long-term and indefinite timeframes. The Electric Power Research Institute (EPRI) developed a formula for estimating the cost to design, license, and construct a dry cask storage facility (EPRI 2012). EPRI's cost estimate is based in part on the number of casks at the facility. For cost estimates in this GEIS, the NRC uses the EPRI value of 10 MTU per cask (EPRI 2009), which translates to 160 casks for a 1,600 MTU at-reactor ISFSI. Based on EPRI's formula and its 2012 data, a single 1,600 MTU storage capacity facility costs $107,000,000 ($107M) to design, license, and construct.

Following the terrorist attacks on September 11, 2001, the NRC issued Orders to ISFSI licensees to require certain compensatory measures. For example, on May 23, 2002, the NRC issued an Order to the GEH Morris wet storage ISFSI (NRC 2002b). On October 16, 2002, the NRC also issued Orders to specifically licensed and generally licensed dry storage ISFSIs (including those with near-term plans to store spent fuel in an ISFSI under a general license). The details of these Orders are withheld from the public for security reasons.

In addition to NRC licensing requirements, licensees may also be subject to individual State requirements. For example, the State of Minnesota Public Utilities Commission requires an applicant to receive a "certificate of need" prior to constructing an ISFSI.

Example of At-Reactor ISFSIs

Dry cask storage systems in use in the United States are summarized in Appendix G. Two common systems are described below.

[9] The regulations reference "irradiated-fuel-management plans." For the purposes of this discussion there is no difference between irradiated fuel and spent fuel.

A common vertical dry cask storage system currently in use in at-reactor ISFSIs is Holtec International's HI-STORM 100. The HI-STORM cylindrical overpack is stored on an ISFSI pad with its longitudinal axis in a vertical orientation and could contain, for example, a single Holtec MPC-32 multipurpose canister, which can hold up to 32 PWR fuel assemblies. Compatible canisters are also available for BWR spent fuel. As a result, dry storage of the entire 1,600 MTU of spent fuel generated by a typical reactor, assuming all spent fuel is eventually transferred from the spent fuel pool, would require about 100 casks. Each storage cask is about 3.4 m (11 ft) wide and 6.1 m (20 ft) tall. The layout of casks on an ISFSI pad is guided by operational considerations at each site. However, a nominal layout involves casks separated by about 4.5 m (15 ft). Therefore, a typical ISFSI pad with 100 casks located inside a protected area common to the power plant, and arranged as 10 rows of 10 casks each, would cover about 46 × 46 m (150 × 150 ft) for a total area of about 0.2 ha (0.5 ac) (Holtec 2000). For purposes of analysis in this GEIS, the NRC assumes that an ISFSI of sufficient size to hold all spent fuel generated by a reactor is constructed during the reactor's licensed life for operation.

A common horizontal dry cask storage system currently in use in at-reactor ISFSIs is available from Transnuclear, Inc., a wholly-owned subsidiary of AREVA North America. The NUHOMS horizontal cask system uses dry shielded canisters that are placed in concrete horizontal storage modules (HSMs). Among the compatible NRC-approved canister designs is the NUHOMS-61BT dry shielded canister. This canister, for example, can hold 61 BWR fuel assemblies. Canisters are also available for PWR spent fuel. For a BWR, the HSM is about 6.0 m (20 ft) long, 4.6 m (15 ft) high and 2.9 m (9.7 ft) wide. As a result, dry storage of 1,600 MTU of spent fuel generated by a generic BWR, assuming all spent fuel is eventually transferred from the spent fuel pool to an at-reactor ISFSI, would require about 150 HSMs. If HSMs were installed in rows and placed back-to-back in 2 × 10 arrays, an ISFSI with 150 HSMs would require about 7 double module rows and a single module row of 10 HSMs. Allowing for a 6-m- (20-ft-) wide concrete approach slab on the entrance side of each HSM, a 150 HSM ISFSI site would be about 60 m (200 ft) wide and 220 m (720 ft) long. Therefore, the total area of the horizontal ISFSI, including the protected area, would be about 1.3 ha (3.6 ac).

2.1.3 Away-from-Reactor ISFSIs

Existing away-from-reactor ISFSIs include the GEH Morris wet storage facility in Morris, Illinois, and the DOE's Three Mile Island, Unit 2 Fuel Debris ISFSI at the Idaho National Engineering Laboratory. Further, the NRC has issued a license to PFS for an away-from-reactor ISFSI, which would have been located on the reservation of the Skull Valley Band of Goshute Indians (NRC 2004b).

A future away-from-reactor ISFSI could accept spent fuel from one or more nuclear power plants. For purposes of this GEIS, the NRC assumes that the nuclear power industry could develop an away-from-reactor ISFSI that would store up to 40,000 MTU of spent fuel from various nuclear power plant sites using existing technologies.

Construction of away-from-reactor ISFSIs is a continued storage activity for the short-term, long-term, and indefinite timeframes. For an away-from-reactor ISFSI, the initial construction cost is different than subsequent replacement construction costs because of transportation. For spent fuel transportation, continued storage only addresses the one-time transfer of spent fuel from the at-reactor ISFSI to an away-from reactor ISFSI. Therefore, transportation capital costs are only included in the initial construction of an away-from-reactor ISFSI. For continued storage, subsequent replacement of an away-from-reactor ISFSI excludes transportation capital costs because the spent fuel is already located at the site. EPRI estimated the costs of constructing a 40,000 MTU ISFSI (EPRI 2009). The EPRI estimate is based in part on the number of casks at the facility. For cost estimates in this GEIS, the NRC uses the EPRI value of 10 MTU per cask (EPRI 2009) which translates to 4,000 casks for a 40,000 MTU away-from-reactor ISFSI. Based on 2009 data from EPRI (EPRI 2009), the NRC estimates initial construction costs for a 40,000 MTU away-from-reactor interim storage facility at $680M, which includes $74.2M for start-up costs, $141M for facility capital costs, and $465M for transportation capital costs. Excluding the transportation capital cost reduces the price for building a replacement away-from-reactor ISFSI at that location (i.e., subsequent replacement construction cost) to $215M. Activity costs associated with transportation are described in GEIS Section 2.2.1.4.

Start-up costs *include the design, engineering, and licensing costs associated with constructing a storage facility.*

Storage facility capital costs *include the construction, material, and equipment costs for the storage pads and the various support buildings.*

Transportation capital costs *include infrastructure (e.g., rail spurs), transportation equipment (e.g., rail locomotives and cars), and transportation casks and associated equipment.*

Spent fuel would be moved from operating or decommissioning reactor sites, or ISFSI-only sites, to an away-from-reactor ISFSI or ISFSIs, and then from the away-from-reactor ISFSI to one or more permanent repositories. Aside from the existing GEH Morris wet storage facility, and for the purposes of the analysis in this GEIS, the NRC assumes that, in the future, a portion of the nuclear power industry's spent fuel would be stored in one or more dry cask storage systems at an away-from-reactor ISFSI.

In 2006, the NRC granted a license to PFS, to construct and operate an away-from-reactor ISFSI in Skull Valley, Utah. PFS, a consortium of eight nuclear power utilities, proposed to construct the site on the reservation of the Skull Valley Band of Goshute Indians, about 80 km (50 mi) southwest of Salt Lake City, Utah. The PFS facility was intended for temporary aboveground storage, using the Holtec HI-STORM dual-purpose canister-based cask system, of up to 40,000 MTU of spent fuel from U.S. commercial nuclear power plants. PFS proposed to build the ISFSI on a 330-ha (820-ac) site leased from the Skull Valley Band of Goshute Indians. The site would be located in the northwest corner of the reservation approximately 6 km (3.5 mi)

from the Skull Valley Band's village. The proposed PFS ISFSI has not been constructed. Despite the PFS facility not having been constructed, issuance of the PFS license supports the assumption in this GEIS that an away-from-reactor ISFSI is feasible and that the NRC can license an away-from-reactor storage facility. Thus, the NRC's analysis of construction, operation, and decommissioning activities and impacts for an away-from-reactor ISFSI in NUREG–1714 are reflected in this GEIS (NRC 2001).

Consolidated Storage

On January 29, 2010, the President of the United States directed the Secretary of Energy to establish a "Blue Ribbon Commission on America's Nuclear Future." The Blue Ribbon Commission was tasked with conducting a comprehensive review of policies for managing the back end of the nuclear fuel cycle and recommending a new strategy. The Blue Ribbon Commission issued its findings and conclusions in January 2012 (BRC 2012). Among the findings and conclusions related to continued storage of spent fuel was a strategy for prompt efforts to develop one or more consolidated storage facilities.

In January 2013, DOE published its response to the Blue Ribbon Commission recommendations titled, *Strategy for the Management and Disposal of Used Nuclear Fuel and High-Level Radioactive Waste* (DOE 2013). This strategy implements a program over the next 10 years that, with congressional authorization, will:

- site, design, construct, license, and begin operation of a pilot interim storage facility by 2021 with an initial focus on accepting spent fuel from shutdown reactor sites,
- advance toward the siting and licensing of a larger interim storage facility to be available by 2025 with sufficient capacity to provide flexibility in the waste-management system and allow for acceptance of enough spent fuel to reduce expected government liabilities, and
- make demonstrable progress on the siting and characterization of repository sites to facilitate the availability of a geologic repository by 2048.

The Federal government's support for interim storage supports the NRC's decision to consider this type of facility as one of the reasonably foreseeable interim solutions for spent fuel storage pending ultimate disposal at a repository.

2.1.4 Dry Transfer System

Although there are no dry transfer systems (DTSs) at U.S. nuclear power plant sites today, the potential need for a DTS, or facility with equivalent capability, to enable retrieval of spent fuel from dry casks for inspection or repackaging will increase as the duration and quantity of fuel in dry storage increases. A DTS would enhance management of spent fuel inspection and repackaging at all ISFSI sites and provide additional flexibility at all dry storage sites by enabling

repackaging without the need to return the spent fuel to a pool. A DTS would also help reduce risks associated with unplanned events or unforeseen conditions and facilitate storage reconfiguration to meet future storage, transport, or disposal requirements (Carlsen and Raap 2012).

Several DTS designs and related concepts have been put forward over the past few decades. Among these designs is a design developed by Transnuclear, Inc. in the early 1990s under a cooperative agreement between DOE and EPRI. Although the conceptual design was based on transferring spent fuel from a 30-ton 4-assembly source cask to a 125-ton receiving cask, the DTS could be adapted to be suitable for any two casks (Carlsen and Raap 2012).

On September 30, 1996, the DOE submitted to the NRC for review a topical safety analysis report on the Transnuclear-EPRI DTS design (DOE 1996). In November 2000, the NRC issued an assessment report in which it found the DTS concept has merit. The NRC's assessment was based on the DTS meeting the applicable requirements of 10 CFR Part 72 for spent fuel storage and handling and 10 CFR Part 20 for radiation protection. However, the DOE has not yet requested a Part 72 license for the DTS (NRC 2000).

Construction of a DTS is considered a continued storage activity in the long-term and indefinite timeframes. Based on EPRI data (EPRI 1995), the NRC estimates a construction cost of $8.58M for the development of a DTS to handle bare spent fuel that could accommodate repackaging, as needed, to replace casks. The NRC assumed that estimated construction costs for the DTS are the same for both the at-reactor and away-from-reactor facilities.

The reference DTS considered in this GEIS is a two-level concrete and steel structure with an attached single-level weather-resistant preengineered steel building. The concrete and steel structure provides both confinement and shielding during fuel transfer operations. The DTS was designed to enable loading of one receiving cask in 10 24-hour days and unloading one source cask in one 24-hour day.

The key facility parameters and characteristics described in the September 30, 1996, topical safety analysis report are summarized below.

The reference DTS is a reinforced-concrete rectangular box structure with internal floor dimensions of about 8 × 5.5 m (26 × 18 ft) and about 14 m (47 ft) tall. The system also includes an attached, prefabricated, aluminum Butler-type building referred to as the preparation area with dimensions of about 11.6 x 7.6 m (38 × 25 ft) wide and 11.6 m (38 ft) tall. The basemat for the facility measures 14.9 × 21.9 m (49 × 72 ft), and the security zone would be about 76 × 91 m (250 × 300 ft) (i.e., less than 0.7 ha [2 ac]).

As shown in Figure 2-3, the preparation area is located at ground level of the DTS. The lower access area is next to the preparation area and directly below the transfer confinement area.

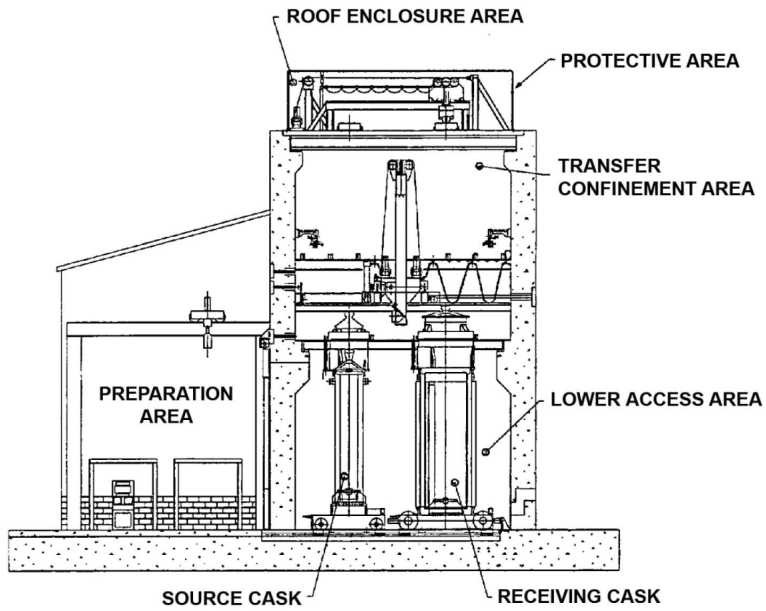

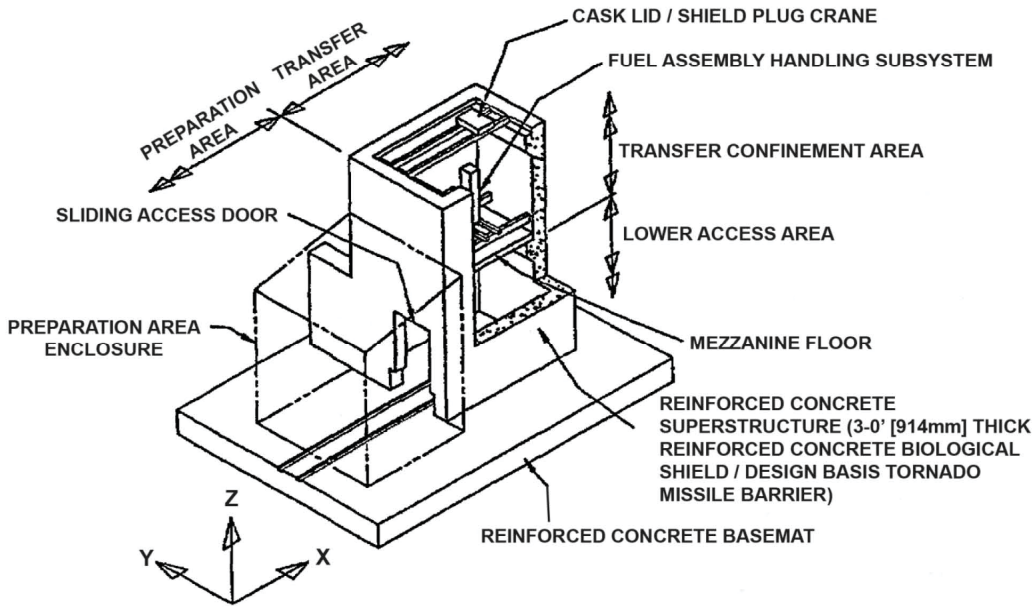

Figure 2-3. Conceptual Sketches of a Dry Transfer System (DOE 1996)

The lower access area provides shielding, confinement, and positioning for the open source and receiving casks during spent fuel transfers. An 18- to 23-cm (7- to 9-in.)-thick steel sliding door separates the lower access area from the preparation area. The transfer confinement area is the upper level of the DTS, directly above the lower access area. The transfer confinement area provides the physical confinement boundary and radiation shielding between spent fuel and the environment.

Transnuclear-EPRI found that radioactive waste generation from dry transfer activities could not be readily quantified, as it depends strongly on reactor-specific conditions, primarily the crud levels on the fuel assemblies. Table 6.1-1 of the topical safety analysis report (DOE 1996) showed the expected waste sources, including decontamination wastes, spalled material in a crud catcher, and prefilters and high-efficiency particulate air filters used in the heating ventilation and air conditioning system. Other wastes considered included mechanical lubricants and precipitation runoff. The DTS does not rely on water-supply lines. Water is brought to the facility in bottles and used for general purpose cleaning only.

The reference DTS, if licensed, would operate under the radiological protection requirements of 10 CFR Part 20, “Standards for Protection against Radiation.” Occupational doses for various tasks performed in the DTS are provided in Table 7.4-1 of the topical safety analysis report (DOE 1996). Total estimated occupational doses from loading a single cask are about 0.5 person-rem.

Maximum offsite doses reported in Table 7.6-1 of the topical safety analysis report were estimated to range from 44 mrem per year at 100 m to 2 mrem per year at 500 m.

As with other facilities licensed under 10 CFR Part 72, the design events identified in ANSI/ANS 57.9 (ANSI/ANS 1992) form the basis for the accident analyses performed for the DTS. The bounding accident results for a distance of 100 m are a stuck fuel assembly (47 mrem) and a loss-of-confinement barrier (721 mrem).

This GEIS considers the environmental impacts of constructing a reference DTS to provide a complete picture of the environmental impacts of continued storage. This GEIS does not license or approve construction or operation of a DTS. A separate licensing action would be necessary before a licensee may construct and operate a site-specific DTS.

For the purposes of analysis in this GEIS, the NRC relies primarily on the facility description of the Transnuclear-EPRI DTS described above. However, for some impact assessments in this GEIS, the NRC has drawn from the *Environmental Impact Statement for the Proposed Idaho Spent Fuel Facility at the Idaho National Engineering and Environmental Laboratory in Butte County, Idaho* (NRC 2004b). The NRC licensed the Idaho Spent Fuel Facility in November 2004, but DOE has not constructed the facility. However, the proposed facility has the capability to handle bare spent fuel for the purposes of repackaging and storing spent fuel from

Peach Bottom Unit 1; the Shippingport Atomic Power Station; and various training, research, and isotope reactors built by General Atomics. Because the Idaho Spent Fuel Facility, like the DTS, includes design features that allow bare fuel-handling operations to repackage spent fuel from DOE transfer casks to new storage containers, the NRC has concluded that some environmental impacts of the facility would be comparable to those of a DTS.

2.2 Generic Activity Descriptions

As described in Chapter 1, this GEIS analyzes environmental impacts of the continued storage of spent fuel in terms of three storage timeframes: short-term, long-term, and indefinite storage. As described below, the activities at spent fuel storage facilities during the short-term timeframe coincide with nuclear power plant decommissioning activities. By the beginning of the long-term timeframe, reactor licensees will have removed all spent fuel from the spent fuel pool and decommissioned all remaining nuclear power plant structures. At that point, all spent fuel will be stored in either an at-reactor or away-from-reactor ISFSI. During the long-term storage timeframe, the NRC has conservatively assumed for the purpose of analysis in this GEIS that the need will arise for the transfer of spent fuel assemblies from aged dry cask storage systems to newer systems of the same or newer design. In addition, the NRC assumes that storage pads and modules would need to be replaced periodically. Section 1.8.2 identifies the continued storage activities for which the NRC evaluated the environmental impacts in this GEIS. This section provides the costs for those activities, as well as costs for transporting spent fuel to an away-from-reactor ISFSI during continued storage; the environmental impacts of transporting spent fuel to an away-from-reactor ISFSI are analyzed in Chapter 5.

2.2.1 Short-Term Storage Activities

As depicted in the generic timeline in Figure 2-4, after about 35 years of operation at low fuel burnups, or about 46 years of high-burnup operation, the spent fuel pool at a typical reactor reaches capacity and spent fuel must be removed from the pool to ensure full core offload capability. The inventory of spent fuel that exceeds spent fuel pool capacity may be transferred to dry cask storage at an at-reactor or away-from-reactor ISFSI. This GEIS focuses on the activities and impacts associated with continued storage in a spent fuel pool and dry cask. This section explains the activities that occur during short-term storage:

- decommissioning of the plant systems, structures, and components not required for continued storage of spent fuel,
- routine maintenance of the pool and ISFSI, and
- transfer of spent fuel from the pool to the at-reactor or away-from-reactor ISFSI.

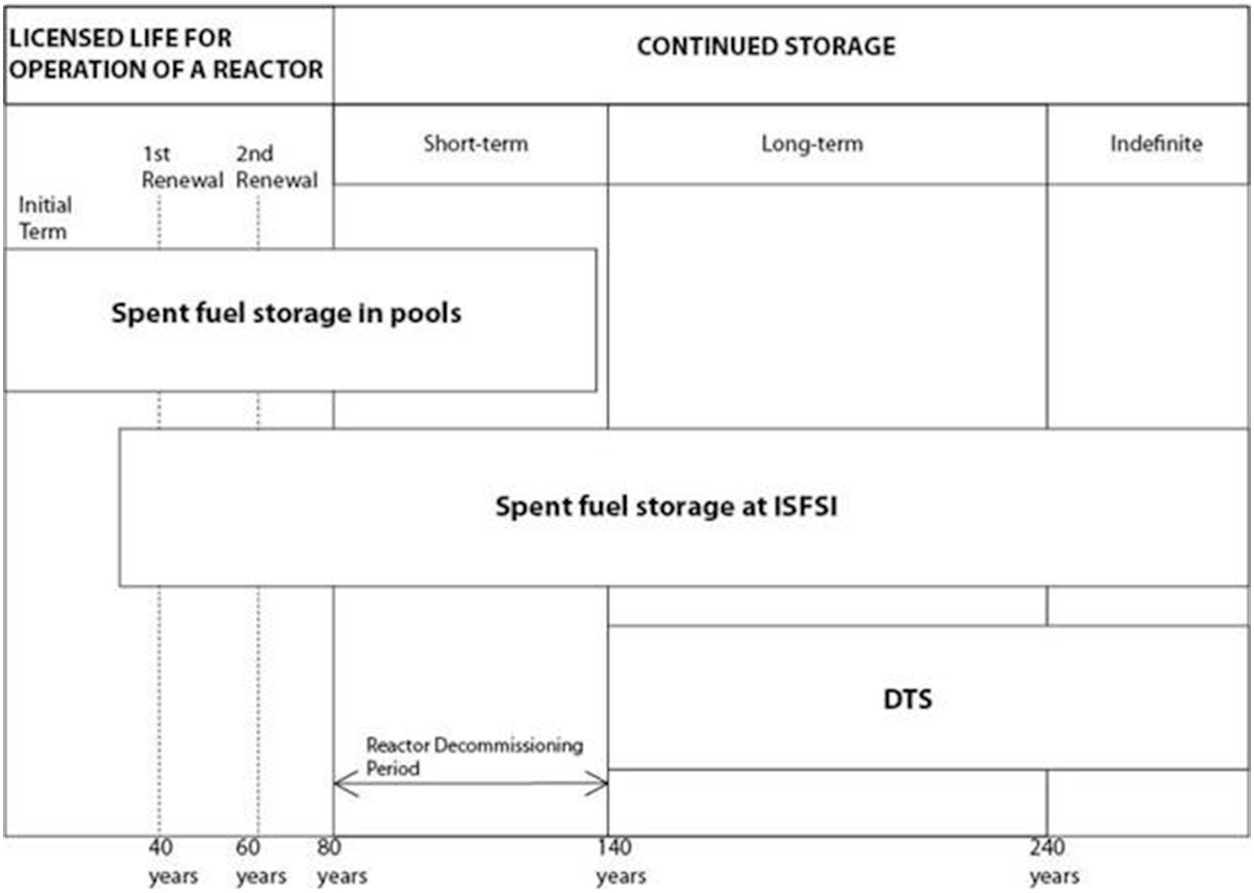

Figure 2-4. Continued Storage Timeline

2.2.1.1 Decommissioning Activities during Short-Term Storage

A number of activities occur after a reactor licensee declares permanent cessation of operations. These activities are divided into three phases: (1) initial activities; (2) major decommissioning and storage activities; and (3) license-termination activities. The initial activities include the licensee's certification to the NRC within 30 days of the decision or requirement to permanently cease operations. This is followed by certification of permanent fuel removal from the reactor. Within 2 years of permanent shutdown, the licensee is required to submit to the NRC a post-shutdown decommissioning activities report that includes a description of planned decommissioning activities along with a schedule, an estimate of expected costs, and a discussion that provides the reasons for concluding that previously issued environmental impact statements bound the site-specific decommissioning activities (NRC 2013c).

Licensees may choose from three decommissioning options: DECON, SAFSTOR, and ENTOMB:

DECON: The equipment, structures, and portions of the facility and site that contain radioactive contaminants are removed or decontaminated to a level that permits termination of the license shortly after cessation of operations.

SAFSTOR: The facility is placed in a safe, stable condition and maintained in that state until it is subsequently decontaminated and dismantled to levels that permit license termination. During SAFSTOR, a facility is left intact, but the fuel is removed from the reactor vessel and radioactive liquids are drained from systems and components and then processed. Radioactive decay occurs during the SAFSTOR period, which reduces the levels of radioactivity in and on the material and, potentially, the quantity of material that must be disposed of during decontamination and dismantlement.

ENTOMB: ENTOMB involves encasing radioactive structures, systems, and components within a structurally long-lived substance, such as concrete. The entombed structure is appropriately maintained, and continued surveillance is carried out until the radioactivity decays to a level that permits termination of the license[10] (NRC 2013c). The NRC has previously considered a range of likely ENTOMB scenarios. For all scenarios considered, spent fuel was removed from the spent fuel pool prior to entombment (NRC 2002a). While the nuclear power industry has expressed interest in maintaining the option for ENTOMB, no licensees have committed to using it (NRC 2002c).

The choice of decommissioning option is left to the licensee, but decommissioning must conform to the NRC's regulations. This choice is communicated to the NRC and the public in the post-shutdown decommissioning activities report. In addition, the licensee may choose to combine the DECON and SAFSTOR options. For example, after power operations cease at a facility, a licensee could use a short storage period for planning purposes, followed by removal of large components (such as the steam generators, pressurizer, and reactor vessel internals), place the facility in storage for 30 years, and eventually finish the decontamination and dismantlement process (NRC 2013c).

If a licensee needs to change the decommissioning schedules or activities identified in the post-shutdown decommissioning activity report, or if the decommissioning costs increase significantly, 10 CFR 50.82(a)(7) and 52.110(g) require the licensee to notify the NRC in writing

[10] Because most power reactors will have radionuclides in concentrations exceeding the limits for unrestricted use even after 100 years, this option will generally not be feasible (NRC 2013c).

and send a copy to the affected States. The NRC uses the post-shutdown decommissioning activity report and any written notification of changes to manage decommissioning oversight activities.

Decommissioning will be completed within 60 years of permanent cessation of operations in accordance with the license-termination requirements for power reactors in 10 CFR 50.82(a)(3) and 52.110(c). Completion of decommissioning beyond 60 years will be approved by the Commission only when necessary to protect public health and safety. Factors that will be considered by the Commission include unavailability of waste disposal capacity and other site-specific factors, including the presence of other nuclear facilities at the site. Given this regulatory framework, it may be reasonably assumed that each nuclear power plant, including its onsite spent fuel pool, will be decommissioned within 60 years of permanent cessation of operations.

Licensees may begin major decommissioning activities 90 days after the NRC has received the post-shutdown decommissioning activities report. The term “major decommissioning activity” is defined in 10 CFR 50.2 and means, for a nuclear power reactor facility, any activity that results in permanent removal of major radioactive components, permanently modifies the structure of the containment, or results in dismantling components for shipment containing greater-than-class-C low-level waste as defined in 10 CFR 61.55. Finally, once decommissioning is completed, and any spent fuel stored by the licensee is removed from the site, a licensee may apply to the NRC to terminate its Part 50 or Part 52 license.[11] A licensee is required by 10 CFR 50.82(a)(9) or 52.110(i)(1) to submit to the NRC a license-termination plan as a supplement to its final safety analysis report at least 2 years prior to the expected termination of the license as scheduled in the post-shutdown decommissioning activities report.

Decommissioning activities are not a part of continued storage. Therefore, decommissioning costs are not included in this GEIS.

2.2.1.2 Activities in Spent Fuel Pools

Spent fuel pools are cooled by continuously circulating water that cools the spent fuel assemblies and provides shielding from radiation. During the short-term storage timeframe, the pools will be used to store fuel until a licensee decides to remove the spent fuel as part of implementing the selected decommissioning option. Beyond the short-term storage timeframe, the NRC assumes that all of the spent fuel has been transferred to a dry cask storage system in an at-reactor or away-from-reactor ISFSI, which is consistent with current practice.

[11] A licensee may terminate its Part 50 or Part 52 license earlier if the remaining spent fuel is stored under a specific license issued under 10 CFR Part 72.

Operation and maintenance of spent fuel pools as well as the handling and transfer of spent fuel from spent fuel pools to ISFSIs are continued storage activities for the short-term timeframe. The U.S. Government Accountability Office (GAO) estimated the annual costs for operating and maintaining a spent fuel pool at a decommissioning reactor site (GAO 2012). Based on GAO's 2012 estimates, the NRC estimates that costs range from $8.2M to $13.4M per year. For loading the fuel from the pools into dry cask storage, EPRI estimated costs for the initial cask procurement and loading (EPRI 2012). Based on EPRI's estimates, the NRC estimates costs to be $1.34M per cask. Based on the estimate of $1.34M per dry cask, the costs for transferring all of the spent fuel from the pool to dry cask for a 1,600 MTU facility (assuming 160 dry casks) would be $214M. This cost estimate is conservative because some of the spent fuel may have been moved into dry casks before the end of the licensed life for operation of a reactor; therefore, those costs would not be incurred during continued storage.

During the short-term storage timeframe, spent fuel in the pool continues to generate decay heat from radioactive decay. The rate at which the decay heat is generated decreases the longer the reactor has been shut down. Storing the spent fuel in a pool of water provides a heat sink adequate for the removal of heat from the irradiated fuel. In addition, the fuel is located under water so that the radiation emanating from the fuel is shielded by the water, thus significantly limiting worker exposure to radiation. After the spent fuel has cooled adequately, it can be removed from the pool and stored in an ISFSI in air-cooled dry casks. At the earliest, such as for low-burnup spent fuel, transfer of spent fuel to an ISFSI occurs after the fuel has cooled for 5 years (NRC 2002a). Minimum cooling times for high-burnup fuel vary with burnup and initial uranium enrichment for different dry cask storage systems, ranging from 5 years to greater than 20 years.

Spent fuel pools are cooled by spent fuel pool cooling systems, which typically consist of pumps to circulate cooling water through the system, a purification system of filters and a demineralizer, and a heat exchanger (which transfers the heat from the spent fuel pool cooling system to the service-water system or its equivalent). The operation of the purification system generates some liquid low-level radioactive waste and some solid low-level radioactive waste in the form of demineralizer resins. During decommissioning, some licensees opt to modify the existing spent fuel pool support systems by installing self-contained spent fuel pool cooling and cleanup systems and monitoring, controls and electrical power. These modifications effectively isolate the spent fuel pool from the remainder of plant structures, systems, and components, thereby creating a "spent fuel pool island." This approach allows decommissioning to begin on the remainder of the plant while the spent fuel is safely stored (EPRI 2005). As described in Chapter 4 of this GEIS, the operation of a new self-contained system would be bounded by the impacts of operating the existing cooling system, which are also described in Chapter 4. The environmental impacts of constructing a new spent fuel pool cooling system, which facilitates decommissioning activities, are addressed in Chapter 6 of this GEIS.

For plants that enter SAFSTOR, the spent fuel pool will continue to be subject to preventative and corrective maintenance, including maintenance of the structure, its security systems, radiation protection and environmental monitoring programs, and processing of radioactive waste that may be generated.

For purposes of analysis in this GEIS, the NRC assumes timely decommissioning of the reactor in accordance with requirements in 10 CFR 50.82 or 52.110(c). As a result, all spent fuel in storage in the spent fuel pool is assumed to be transported to a repository, if it is available, or to either an at-reactor or away-from-reactor ISFSI within 60 years beyond the licensed life for operation of the reactor.

2.2.1.3 Activities at At-Reactor ISFSIs

Operation and maintenance activities at an at-reactor ISFSI are focused on inspections, monitoring, and training. The staff that must be trained for ISFSI operations include staff for operations, maintenance, health physics, and security. A licensee will also maintain an emergency response plan for ISFSI-related events.

At-reactor ISFSI operation and maintenance are continued storage activities in the short-term, long-term, and indefinite timeframes. EPRI developed estimates for routine annual operation and maintenance costs for an at-reactor ISFSI (EPRI 2012). Based on EPRI's estimates, the NRC estimates annual costs of $6.4M. Construction of an at-reactor ISFSI is not a continued storage activity in the short-term timeframe.

In accordance with 10 CFR 72.42 for specifically licensed ISFSIs, the initial license term for an ISFSI must not exceed 40 years and licenses may be renewed upon NRC approval for a period not to exceed 40 years. In accordance with 10 CFR 72.212, a general license for spent fuel storage in a cask fabricated under a Certificate of Compliance commences on the date that the cask is first used by a general licensee and continues through any renewals of the Certificate of Compliance, unless otherwise specified in the Certificate of Compliance, and terminates when the Certificate of Compliance for the cask expires. Renewal applications for specifically licensed ISFSIs and spent fuel storage cask designs approved for use under the general license must include, among other things: (1) time-limited aging analyses that demonstrate structures, systems, and components important to safety will continue to perform their intended safety function for the requested period of extended operation and (2) a description of the aging management program for management of issues associated with aging that could adversely affect structures, systems, and components important to safety. The NRC reviews renewal applications using its *Standard Review Plan for Renewal of Spent Fuel Dry Cask Storage System Licenses and Certificates of Compliance* (NRC 2011b).

The kinds of aging effects managed under an aging management program include, but are not limited to concrete cracking and spalling; cask and canister confinement boundary material

degradation; and reduction in heat transfer (e.g., by blocked air duct screens). The application of aging management programs may include structure monitoring; monitoring of protective coating on carbon steel structures; ventilation surveillance; welded canister seal and leakage monitoring programs; and bolted canister seal and leakage monitoring programs (DOE 2012).

2.2.1.4 Activities at Away-from-Reactor ISFSIs

In assessing environmental impacts from construction and operation at an away-from-reactor ISFSI, the NRC has drawn from the PFS facility environmental impact statement prepared by the NRC (NRC 2001). The proposed PFS facility was designed to store up to 40,000 MTU and was licensed to operate for 20 years. The NRC now allows an initial license term of 40 years with 40-year renewal terms. While this GEIS uses the general attributes of such a facility to assess likely impacts for purposes of this analysis, it should be recognized that the environmental impacts of constructing and operating an away-from-reactor ISFSI would be evaluated in more detail in an environmental review associated with a site-specific license application.

Based on the construction plans for the proposed PFS facility, construction of the away-from-reactor ISFSI would include construction of major buildings (e.g., administrative, security, and maintenance) including a canister transfer building and installation of concrete storage pads, batch plant, access and heavy haul roads, parking areas, and potentially new rail lines. A peak workforce of approximately 250 workers would be expected (NRC 2001). Groundwater wells could be installed for potable water use or aboveground storage tanks could be erected for potable water and water for fires and the concrete plant.

Should storage at an away-from-reactor ISFSI continue for a long enough time for bare fuel handling to be required for inspection or maintenance, then a DTS could be constructed at the facility.

Operation of the away-from-reactor ISFSI would include receiving, transferring, storing, and repackaging of spent fuel. If a repository becomes available, operations could include transferring spent fuel canisters to shipping casks and transporting them to the repository.

Approximately 100 to 200 loaded shipping casks would be received at the postulated facility each year (NRC 2001). The shipping casks would be brought into the canister transfer building where the spent fuel would be transferred from the shipping cask to a storage cask. The storage casks would then be placed on the concrete storage pads.

Away-from-reactor ISFSI construction, operation, and maintenance are continued storage activities in the short-term, long-term, and indefinite timeframes. Section 2.1.3 discusses away-from-reactor ISFSI construction costs. The initial away-from-reactor ISFSI constructed during the short-term timeframe includes transportation capital costs and is estimated to be $680M

(see Section 2.1.3). EPRI estimated the total annual routine costs for operation and maintenance during "caretaker" periods (i.e., when loading and unloading is not occurring) (EPRI 2009). This estimate included administrative costs, labor costs, and other operating costs (excluding railroad freight fees and State inspection fees). Based on EPRI's estimates, the NRC estimates annual costs for "caretaker" periods of $11.6M.

Continued storage costs will include transportation activities to move spent fuel to an away-from-reactor ISFSI. These transportation costs include initial costs for cask procurement and loading, additional labor costs associated with loading and unloading transportation casks (i.e., labor cost beyond the annual routine caretaker costs), and shipping costs (i.e., railroad freight fees). As described in Section 2.1.3, transportation casks and other transportation equipment capital costs are accounted for in the storage facility construction cost. The costs for initial cask procurement and loading are assumed to be the same as the costs for the at-reactor facility, which are estimated to be $1.34M (see Section 2.2.1.2). EPRI also estimated annual transportation of 200 casks (i.e., 2,000 MTU of spent fuel) to an away-from-reactor ISFSI (EPRI 2009). Based on EPRI's estimates, the NRC estimates additional annual labor costs of $5.3M for loading and unloading the transportation casks and $41.5M in railroad fees and State inspection fees.

To completely fill a 40,000 MTU (assuming 4,000 casks) capacity away-from-reactor facility costs $5,350,000,000 ($5.35B) for initial cask procurement and loading, $106M for the additional labor associated with loading and unloading transportation casks, and $830M for transportation fees. The total cost for initially constructing and filling a 40,000 MTU capacity away-from-reactor ISFSI is $6.97B.

2.2.2 Long-Term Storage Activities

As described below, the new activities associated with long-term storage include continued facility maintenance, construction, and operation of a DTS, and storage facility replacement. The maintenance activities during the long-term storage activities are the same as for the short-term, including any additional monitoring and inspections that may arise as part of implementation of ongoing aging management programs. The annual costs for routine ISFSI operation and maintenance described in Section 2.2.1.3 in the short-term timeframe would continue throughout the long-term timeframe.

2.2.2.1 Construction and Operation of a DTS

As described in Section 2.1.4, the NRC assumes a DTS, or its equivalent, would be used to transfer fuel as needed for inspection or repackaging. For the purposes of this GEIS, the NRC assumes the reference DTS would be constructed, operated, and replaced once during the long-term storage timeframe, and every 100 years thereafter. The reference DTS would occupy about 0.04 ha (0.1 ac) and would have a total restricted access area of 0.7 ha (2 ac). The NRC

assumes that construction of a reference DTS would take 1 to 2 years. Section 2.1.4 discusses construction costs for a DTS. Operation costs for the DTS, described in Section 2.2.2.2, are associated with the labor to transfer spent fuel from old casks to new casks.

DOE has described the operation of a reference DTS in the *Dry Transfer System Topical Safety Analysis Report* (DOE 1996). A summary is provided here to illustrate the process of spent fuel repackaging.

The reference DTS includes three major areas:

- preparation area,
- lower access area, and
- transfer confinement area.

As shown in Figure 2-3, receiving casks and source casks enter the preparation area and exit the DTS on rail-mounted trolleys. To begin spent fuel transfer operations, a receiving cask (i.e., the cask into which fuel will be transferred) is transported to the DTS. The receiving cask is positioned and loaded on a receiving cask transfer trolley at the DTS and rolled into the preparation area. Next, the receiving cask lid and outer and inner canister lids are removed. Finally, the receiving cask is moved into the lower access area and mated to the transfer confinement area.

A source cask (i.e., the cask from which fuel will be transferred) follows a similar path as the receiving cask into the lower access area and is mated to the transfer confinement area. No personnel are present in the lower access area for the transfer operations; all transfer operations are controlled remotely. The lids on both the receiving cask and source cask are removed to prepare for spent fuel transfer. The fuel-assembly-handling subsystem in the transfer confinement area is used to grab and lift a spent fuel assembly from the source cask. The spent fuel assembly is lifted inside a transfer tube and then moved over an empty position in the receiving cask. The spent fuel assembly is lowered into the receiving cask and detached from the lifting device. When spent fuel transfers are complete, both casks are closed, detached from the transfer confinement area, and ultimately removed from the lower access area back to the preparation area.

Maintenance and monitoring activities at the DTS would include routine inspections and testing of the spent fuel and cask transfer and handling equipment (e.g., lift platforms and associated mechanical equipment) and process and effluent radiation monitoring.

Damaged Fuel

As stated in Section 2.1.4, one reason DTSs may be needed in the future is to reduce risks associated with unplanned events (e.g., the need to repackage spent fuel that becomes

damaged or that becomes susceptible to damage while in dry cask storage). The NRC defines damaged spent fuel as any fuel rod or fuel assembly that can no longer fulfill its fuel-specific or system-related functions (NRC 2007). These functions include criticality safety, radiation shielding, confinement, and retrievability of the fuel. Appendix B of this GEIS describes spent fuel degradation mechanisms that could occur during continued storage. These include a mechanism (i.e., hydride reorientation) in which high-burnup spent fuel cladding can become less ductile (more brittle) over time as cladding temperatures decrease. Taking actions (e.g., repackaging or providing supplemental structural support) can reduce risks posed by damaged fuel by maintaining fuel-specific or system-related safety functions.

The Transnuclear-EPRI DTS described by DOE in its topical safety analysis report (DOE 1996) and summarized in Section 2.1.4 of this GEIS does not have the capability to handle damaged spent fuel, which the DOE defined as spent fuel that is not dimensionally or structurally sound and spent fuel that cannot be handled by normal means. However, as a result of its experience with damaged spent fuel, described in more detail in the following paragraphs, the nuclear power industry has developed specialized tools that could be deployed if damaged spent fuel needs to be retrieved from a dry cask storage system. Therefore, NRC considers it reasonable to assume that a DTS similar to the Transnuclear-EPRI DTS could be designed, constructed, and equipped to handle damaged fuel.

International experience provides a broad understanding of the technical feasibility of various methods for handling damaged fuel. An International Atomic Energy Agency (IAEA 2009) technical report documented the types of methods that have been used separately or in combination to handle damaged spent fuel under a variety of circumstances while maintaining specific safety functions. The methods include removinging rods, canning, replacing or repairing damaged structural components, and providing supplemental structural support. When a single rod in a fuel assembly is damaged, the damaged rod can be removed to restore the integrity of the fuel assembly, but that process leaves a gap in the fuel assembly. Rod replacement involves replacing the damaged rod with a steel rod to maintain the structural integrity of the assembly to facilitate transfer. Structural repair or replacement involves repairing or replacing damaged components in the assembly (e.g., grid spacers, vanes, and tie plates) to restore stability of the assembly. Supplemental structural support involves adding mechanical strengthening to the assembly to address loss of capabilities from a damaged part.

The NRC requires that spent fuel classified as damaged for storage be protected during storage (e.g., placed in a can designed for damaged fuel, referred to as a damaged fuel can or damaged fuel container (NRC 2007).[12] A damaged fuel can is designed to ensure that the fuel-specific or system-related functions continue to be met. When a spent fuel assembly is placed

[12] An acceptable alternative approved by the NRC is to confine damaged spent fuel using top and bottom "end caps" in dry cask storage system basket cells (Transnuclear, Inc. 2011).

in a damaged fuel can, one or more of the necessary safety functions, depending on the type of can, are performed by the can instead of the spent fuel assembly (IAEA 2009). A damaged fuel can will confine fuel particles, debris, and the damaged spent fuel to a known volume in a cask; ensure compliance with criticality safety, shielding, thermal, and structural requirements; and permit normal handling and retrieval of spent fuel from a cask. An additional example of a method approved by the NRC for providing supplemental structural support to damaged fuel involves using instrument tube tie rods to reinforce PWR spent fuel assembly top nozzles that have suffered inter-granular stress corrosion cracking (74 FR 26285).

In current dry cask storage system designs, damaged fuel cans are placed in a limited number of positions inside the canister or cask (Transnuclear, Inc. 2011). Because a damaged fuel can performs the safety functions of undamaged fuel components (i.e., criticality safety, shielding, confinement, retrievability, etc.), the presence of damaged fuel cans in dry cask storage systems would not cause environmental impacts during continued storage different from casks containing undamaged spent fuel. For this reason, this GEIS does not further consider generic environmental impacts associated with use of damaged fuel cans or their alternatives.

2.2.2.2 Replacement of Storage and Handling Facilities

For purposes of analysis in this GEIS, the NRC assumes that storage facilities will require complete replacement over the long-term storage timeframe (100 years). Replacement activities are assumed to occur as needed throughout the long-term storage timeframe, but not all at once over a relatively short interval (e.g., 2 years). Replacement activities include the following:

- construction of new ISFSI pads near the initial pads,
- construction of replacement storage casks or HSMs,
- movement of canisters in good condition to new casks or HSMs,
- use of the initial and replacement DTS to transfer fuel to new canisters and casks, as necessary, and
- replacement of the DTS.

Continued storage activities include replacing the storage facility (for either an at-reactor or an away-from reactor ISFSI), the DTS, and the spent fuel canisters and casks. Replacing the ISFSI and DTS requires dismantling the existing facilities and constructing new ones. The costs for dismantling the existing ISFSIs are based on decommissioning activities. Using decommissioning costs conservatively bounds the dismantling costs because there would be fewer activities associated with dismantling than for decommissioning as the site is not being released for other uses. Dismantling costs for at-reactor ISFSIs are based on licensee

information (Nuclear Management Company, LLC 2005) and dismantling costs for away-from-reactor ISFSIs are based on EPRI information (EPRI 2009).

The NRC estimates costs for dismantling the existing facility at $7.6M for an at-reactor ISFSI and $248M for an away-from-reactor ISFSI. The cost for dismantling the DTS is the same for both the at-reactor and away-from-reactor facilities. Although the decommissioning cost for a DTS is not known, the decommissioning cost of an away-from reactor ISFSI is about 40 percent of the initial construction costs (see Section 2.1.3). Applying this same 40 percent difference between the DTS construction and demolition costs results in an estimated DTS dismantling cost of $3.43M. Construction of a replacement at-reactor facility costs $107M (see Section 2.1.2.2) and construction of a replacement away-from-reactor facility costs $215M (see Section 2.1.3). Construction of a replacement DTS costs $8.58M (see Section 2.1.4). Using the costs for initial construction as estimates for constructing replacement facilities can be considered conservative because start-up costs (e.g., design, engineering, and licensing cost) may be lower for subsequent construction at the same location.

Replacing a cask requires procurement of a new cask and the labor to unload the fuel from the old cask and then load the fuel into the new cask. EPRI estimated costs for cask procurement and loading (EPRI 2012). Based on EPRI's estimates, the NRC estimates that replacing a single cask costs $1.66M, which includes procuring a new cask at $1.02M, unloading fuel from the old cask at $321,000, and subsequent loading of spent fuel into the new cask at $321,000. The initial transfer of spent fuel into a dry cask costs $1.34M per cask (see Section 2.2.1.2) because the unloading of spent fuel from the old cask is not required. The labor costs for replacing a single cask can be considered conservative because the unloading of the old cask and loading of the new cask occur essentially as one operation. Replacing all 160 casks for a 1,600 MTU at-reactor ISFSI (assuming 10 MTU per cask) can then be estimated to cost $265M, and replacing all 4,000 casks for a 40,000 MTU away-from-reactor ISFSI (assuming 10 MTU per cask) costs $6.64B. The total cost for complete replacement of an at-reactor storage facility (i.e., dismantling the old ISFSI and DTS, building a new ISFSI and DTS, procuring new casks, and transferring the spent fuel from the old facilities to the new facilities) is about $392M. The total cost for complete replacement of an away-from-reactor facility is about $7.11B.

2.2.3 Indefinite Storage Activities

Should a repository not become available within the long-term storage timeframe, then activities described for the long-term storage timeframe in Section 2.2.2 are assumed to continue indefinitely. For purposes of analysis in this GEIS, the NRC assumes that storage facilities (i.e., an ISFSI and its associated DTS) would be replaced once every 100 years. The costs for replacement of storage and handling facilities discussed in Section 2.2.2.2 would therefore be realized every 100 years as well. The annual costs for routine ISFSI operation and maintenance described in Section 2.2.1.3 for the short-term timeframe would continue.

2.3 References

10 CFR Part 20. *Code of Federal Regulations*, Title 10, *Energy,* Part 20, "Standards for Protection against Radiation." Washington, D.C.

10 CFR Part 50. *Code of Federal Regulations*, Title 10, *Energy*, Part 50, "Domestic Licensing of Production and Utilization Facilities." Washington, D.C.

10 CFR Part 52. *Code of Federal Regulations*, Title 10, *Energy*, Part 52, "Licenses, Certifications, and Approvals for Nuclear Power Plants." Washington, D.C.

10 CFR Part 61. *Code of Federal Regulations*, Title 10, *Energy*, Part 61, "Licensing Requirements for Land Disposal of Radioactive Waste." Washington, D.C.

10 CFR Part 71. *Code of Federal Regulations*, Title 10, *Energy*, Part 71, "Packaging and Transportation of Radioactive Material." Washington, D.C.

10 CFR Part 72. *Code of Federal Regulations*, Title 10, *Energy*, Part 72, "Licensing Requirements for the Independent Storage of Spent Nuclear Fuel, High-Level Radioactive Waste, and Reactor-Related Greater than Class C Waste." Washington, D.C.

74 FR 13926. March 27, 2009. "Power Reactor Security Requirements." *Federal Register,* U.S. Nuclear Regulatory Commission, Washington, D.C.

74 FR 26285. June 2, 2009. "List of Approved Spent Fuel Storage Casks: HI-STORM 100 Revision 6." *Federal Register*, U.S. Nuclear Regulatory Commission, Washington D.C.

76 FR 30399. May 25, 2011. "Duke Energy Carolinas, LLC, Oconee Nuclear Station, Units 1, 2, and 3, Notice of Consideration of Issuance of Amendment to Facility Operating License, Proposed No Significant Hazards Consideration Determination, and Opportunity for a Hearing and Order Imposing Procedures for Document Access to Sensitive Unclassified Non-Safeguards Information." *Federal Register,* U.S. Nuclear Regulatory Commission, Washington, D.C.

77 FR 16175. March 20, 2012. "Station Blackout." *Federal Register*, U.S. Nuclear Regulatory Commission, Washington D.C.

78 FR 21275. April 10, 2013. "Station Blackout Mitigation Strategies." *Federal Register*, U.S. Nuclear Regulatory Commission, Washington D.C.

ANSI/ANS (American National Standards Institute/American Nuclear Society). 1992. *Design Criteria for an Independent Spent Fuel Storage Installation (Dry Storage Type)*.

ANSI/ANS 57.9–1992, La Grange Park, Illinois. Available at http://www.techstreet.com/cgi-bin/detail?doc_no=ans%7C57_9_1992_r2000_;product_id=21087.

BLS (U.S. Bureau of Labor Statistics). 2014a. *CPI Inflation Calculator*. Washington, D.C. Available at http://www.bls.gov/data/inflation_calculator.htm.

BLS (U.S. Bureau of Labor Statistics). 2014b. *CPI Detailed Report— Data for March 2014*. Washington, D.C. Available at http://www.bls.gov/cpi/cpid1403.pdf.

BRC (Blue Ribbon Commission on America's Nuclear Future). 2012. *Report to the Secretary of Energy.* Washington, D.C. Accession No. ML120970375.

Carlsen, B.W. and M.B. Raap. 2012. *Dry Transfer Systems for Used Nuclear Fuel*. INL/EXT–12–26218, Idaho National Laboratory, Idaho Falls, Idaho. Available at http://www.inl.gov/technicalpublications/Documents/5516346.pdf.

Copinger, D.A., C.B. Oland, and D.J. Naus. 2012. *Summary of Aging Effects and Their Management in Reactor Spent Fuel Pools, Refueling Cavities, Tori, and Safety-Related Concrete Structures*. NUREG/CR–7111, Oak Ridge National Laboratory, Oak Ridge, Tennessee. Accession No. ML12047A184.

CRS (Congressional Research Service). 2012. *U.S. Spent Nuclear Fuel Storage*. Washington, D.C. Accession No. ML14142A043.

DOE (U.S. Department of Energy). 1996. *Dry Transfer System Topical Safety Analysis Report.* Volume I, Washington, D.C. Accession No. ML060730035.

DOE (U.S. Department of Energy). 2012. *Managing Aging Effects on Dry Cask Storage Systems for Extended Long-Term Storage and Transportation of Used Fuel.* FCRD–USED–2012–000119, ANL–12/29, Washington, D.C. Available at http://www.ipd.anl.gov/anlpubs/2012/07/73873.pdf.

DOE (U.S. Department of Energy). 2013. *Strategy for the Management and Disposal of Used Nuclear Fuel and High-Level Radioactive Waste*. Washington, D.C. Accession No. ML13011A138.

EIA (Energy Information Administration). 1994. *Spent Nuclear Fuel Discharges from U.S. Reactors 1992.* SR/CNEAF/94–01, Washington, D.C. Available at http://www.ntis.gov/search/product.aspx?ABBR=DE94011195.

Entergy (Entergy Nuclear Operations, Inc.). 2013. *Notification of Permanent Cessation of Power Operations*. White Plains, New York. Accession No. ML13273A204.

EPRI (Electric Power Research Institute). 1988. *An Assessment of Boraflex Performance in Spent-Nuclear-Fuel Storage Racks*. NP–6159, Palo Alto, California. Accession No. ML003736666.

EPRI (Electric Power Research Institute). 1995. *Dry Transfer System for Spent Fuel: Project Report: A System Designed to Achieve Dry Transfer of Bare Spent Fuel between Two Casks.* Report No. 1018722, Palo Alto, California.

EPRI (Electric Power Research Institute). 2005. *Maine Yankee Decommissioning—Experience Report: Detailed Experiences 1997–2004*. Technical Report No. 1011734, Palo Alto, California. Accession No. ML12338A389.

EPRI (Electric Power Research Institute). 2009. *Cost Estimate for an Away-From-Reactor Generic Interim Storage Facility (GISF) for Spent Nuclear Fuel.* Report No. 1018722, Palo Alto, California. Available at http://cybercemetery.unt.edu/archive/brc/20120621082619/http://brc.gov/sites/default/files/documents/1018722.pdf.

EPRI (Electric Power Research Institute). 2012. *Impacts Associated With Transfer of Spent Nuclear Fuel from Spent Fuel Storage Pools to Dry Storage After Five Years of Cooling, Revision 1*. TR–1025206, Palo Alto, California. Available at http://www.epri.com/abstracts/Pages/ProductAbstract.aspx?ProductId=000000000001021049.

GAO. (U.S. Governmental Accountability Office). 2012. *Spent Nuclear Fuel: Accumulating Quantities at Commercial Reactors Present Storage and Other Challenges.* GAO-12-797, Washington, D.C. Available at http://www.gao.gov/assets/600/593745.pdf.

Hanson, B., H. Alsaed, C. Stockman, D. Enos, R. Meyer, and K. Sorenson. 2012. *Gap Analysis to Support Extended Storage of Used Nuclear Fuel Rev. 0*. U.S. Department of Energy Report No. FCRD-USED-2011-000136 Rev. 0, Richland, Washington. Available at http://energy.gov/sites/prod/files/Gap%20Analysis%20Rev%200%20Final.pdf.

Holtec (Holtec International). 2000. *Final Safety Analysis Report for the Holtec International Storage and Transfer Operation Reinforced Module Cask System (HI-STORM 100 Cask System).* Revision 0. Marlton, New Jersey. Accession No. ML072420254.

IAEA (International Atomic Energy Agency). 2009. *Management of Damaged Spent Nuclear Fuel*. IAEA Nuclear Energy Series No. NF-T-3.6, Vienna, Austria. Available at http://www-pub.iaea.org/MTCD/publications/PDF/Pub1395_web.pdf.

Nuclear Management Company, LLC. 2005. *Irradiated Fuel Management Plan*. November 30. Two Rivers, Wisconsin. Accession No. ML053360051.

NRC (U.S. Nuclear Regulatory Commission). 2000. Letter from E. W. Brach to L. Steward dated November 13, 2000, regarding "Issuance of Assessment Report for the Dry Transfer System." Washington, D.C. Accession Nos. ML003769027 (letter) and ML003769386.

NRC (U.S. Nuclear Regulatory Commission). 2001. *Final Environmental Impact Statement for the Construction and Operation of an Independent Spent Fuel Storage Installation on the Reservation of the Skull Valley Band of Goshute Indians and Related Transportation Facility in Tooele County, Utah*. NUREG–1714, Volume 1, Washington, D.C. Accession No. ML020150170.

NRC (U.S. Nuclear Regulatory Commission). 2002a. *Final Generic Environmental Impact Statement on Decommissioning of Nuclear Facilities Supplement 1 Regarding the Decommissioning of Nuclear Power Reactors*. NUREG–0586, Volumes 1 and 2, Washington, D.C. Accession Nos. ML023470327 and ML023500228.

NRC (U.S. Nuclear Regulatory Commission). 2002b. "In the Matter of General Electric Company—Morris Operation: Order Modifying License (Effective Immediately)." Washington, D.C. Accession No. ML021080507.

NRC (U.S. Nuclear Regulatory Commission). 2002c. *Status of the Entombment Option for Power Reactors.* SECY-02-0191, Washington, D.C. Accession No. ML022630660.

NRC (U.S. Nuclear Regulatory Commission). 2004a. *General Electric Company Morris Operation Technical Specifications for Safety.* License SNM–2500, Morris, Illinois. Accession No. ML043630567.

NRC (U.S. Nuclear Regulatory Commission). 2004b. *Environmental Impact Statement for the Proposed Idaho Spent Fuel Facility at the Idaho National Engineering and Environmental Laboratory in Butte County, Idaho*. NUREG–1773, Washington, D.C. Accession No. *ML040490135.*

NRC (U.S. Nuclear Regulatory Commission). 2007. *Division of Spent Fuel Storage and Transportation Interim Staff Guidance - 1, Revision 2, Classifying the Condition of Spent Nuclear Fuel for Interim Storage and Transportation Based on Function*. SFST-ISG-2, Revision 2, Washington, D.C. Accession No. ML071420268.

NRC (U.S. Nuclear Regulatory Commission). 2011a. *Recommendations for Enhancing Reactor Safety in the 21st Century: The Near-Term Task Force Review of Insights from the Fukushima Dai-ichi Accident*. SECY–11–0093, Washington, D.C. Accession No. ML111861807.

NRC (U.S. Nuclear Regulatory Commission). 2011b. *Standard Review Plan for Renewal of Spent Fuel Dry Cask Storage System Licenses and Certificates of Compliance*. NUREG–1927, Washington, D.C. Accession No. ML111020115.

NRC (U.S. Nuclear Regulatory Commission). 2012. *Report to Congress: Advanced Reactor Licensing*. Washington, D.C. Accession No. ML12153A014.

NRC (U.S. Nuclear Regulatory Commission). 2013a. *Generic Environmental Impact Statement for License Renewal of Nuclear Plants*. NUREG–1437, Revision 1, Washington, D.C. Accession No. ML13107A023.

NRC (U.S. Nuclear Regulatory Commission). 2013b. *2013–2014 Information Digest*. NUREG–1350, Volume 25, Washington, D.C. Accession No. ML13241A207.

NRC (U.S. Nuclear Regulatory Commission). 2013c. *Decommissioning of Nuclear Power Reactors*. Regulatory Guide 1.184, Revision 1, Washington, D.C. Accession No. ML13144A840.

NRC (U.S. Nuclear Regulatory Commission). 2014. *U.S. Independent Spent Fuel Storage Installations*. Washington, D.C. Accession No. ML14162A091.

PFS (Private Fuel Storage LLC). 2012. Letter from R. Palmberg to NRC, dated December 20, 2012, regarding "Termination of NRC License No. SNM–2513 for Private Fuel Storage LLC." La Crosse, Wisconsin. Accession No. ML12356A063.

S. Cohen & Associates, Inc. 1998. *Effectiveness of Fuel Rod Cladding as an Engineered Barrier in the Yucca Mountain Repository*. McLean, VA. Accession No. ML033500112.

Sailor, V.L, K.R. Perkins, J.R. Weeks, and H.R. Connell. 1987. *Severe Accidents in Spent Fuel Pools in Support of Generic Safety Issue 82.* NUREG/CR–4982, Brookhaven National Laboratory, Upton, New York. Available at http://www.osti.gov/bridge/servlets/purl/6135335-5voofL/6135335.pdf.

Transnuclear, Inc. 2011. *NUHOMS® 37PTH Dry Shielded Canister*. ANP:U-291-V2-11-ENG, Columbia, Maryland. Available at http://us.areva.com/home/liblocal/docs/Solutions/literature/ANP_U_291_V2_11_ENG_NUHOMS_37PTH.pdf.

UxC (Ux Consulting). 2013. "Over 1700 Dry Storage Systems Deployed in the US." *StoreFUEL* 14(173):14–173, Roswell, Georgia.

3.0 Affected Environment

For purposes of the evaluation in this *Generic Environmental Impact Statement for Continued Storage of Spent Nuclear Fuel* (GEIS), the *affected environment* is the environment that exists at and around the facilities that store spent nuclear fuel (spent fuel) after the end of a reactor's licensed life for operation. Spent fuel is stored in at-reactor spent fuel pools and independent spent fuel storage installations (ISFSIs). Where appropriate, this chapter will discuss the environmental impacts during reactor operations to establish the baseline affected environment at the beginning of continued storage.

The affected environment and potential impacts of continued storage at an away-from-reactor ISFSI are discussed in Chapter 5 and are not addressed further in this chapter. Because conditions at at-reactor ISFSIs are at least partially the result of past construction and operations at power plants, the impacts of these past and ongoing operations and how they have shaped the environment help to establish the baseline affected environment. A comprehensive description of the affected environment during operations is provided in the *Generic Environmental Impact Statement for License Renewal of Nuclear Plants* (License Renewal GEIS) (NRC 2013a) and the analysis in this GEIS relies on that description to help establish the affected environment for continued storage. Sections 3.1 through 3.16 provide a general description of the affected at-reactor environment for each resource area. Descriptions of the typical facilities and activities that occur during continued storage are described in Chapter 2. The potential environmental impacts of continued storage at reactor sites are evaluated in Chapter 4.

3.1 Land Use

This section describes the affected environment in terms of land use associated with continued storage of spent fuel.

The general characteristics of nuclear power plants are described in Section 2.1.1 of this GEIS. Operating commercial nuclear power plant sites range in area from 34 ha (84 ac) to 5,700 ha (14,000 ac) (NRC 2013a). Nuclear power plant sites are zoned for industrial use with land requirements generally amounting to 40 to 50 ha (100 to 125 ac) for the reactor-containment building, auxiliary buildings, cooling system structures, administration and training offices, and other facilities (e.g., switchyards, security facilities, and parking lots). Areas disturbed during construction of the power plant generally were returned to prior uses when construction was completed. Other land commitments include transmission line right-of-ways and cooling lakes (if used) (NRC 2013a).

As described in the License Renewal GEIS (NRC 2013a), areas surrounding nuclear power plant sites typically consist of flat to rolling countryside in wooded or agricultural areas. Information on land cover within 8 km (5 mi) of commercial nuclear power plants is summarized in Table 3.2–1 of the License Renewal GEIS (NRC 2013a). Most of the land cover near plants is undeveloped land (forest, wetlands, herbaceous cover, and shrub/scrub land), agricultural land, or open water. U.S. Nuclear Regulatory Commission (NRC) regions and the location of operating reactors within the United States are shown in Figure 3-1. In Region I (Northeast) and Region II (Southeast), more than 80 percent of land cover surrounding most plants is open water, forest, wetlands, and agricultural. Power plants in Region III (northern Midwest) are mostly surrounded (approximately 80 percent) by agricultural land, open water, and forests. In Region IV (West and southern Midwest), more than 90 percent of land cover surrounding most plants is agricultural land, shrub/scrub land, open water, forest, herbaceous cover, and wetlands (NRC 2013a).

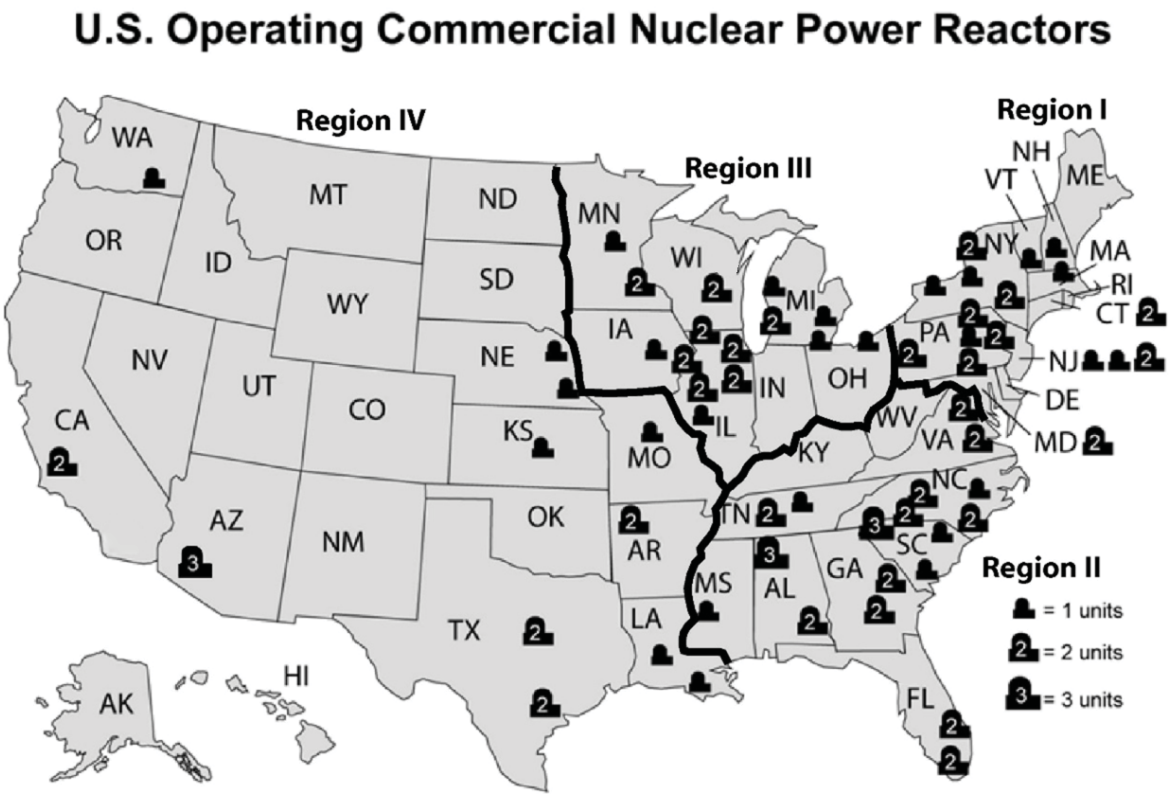

Figure 3-1. Map of NRC Regions Showing Locations of Operating Reactors (NRC 2013b)

Nuclear power plants and their ISFSIs are located in a range of political jurisdictions including towns, townships, service districts, counties, parishes, and states. The distances of plants from metropolitan and residential areas vary among sites. Most sites are not very remote (i.e., they are not more than about 32 km [20 mi] from a community of 25,000 people or 80 km [50 mi] from a community of 100,000 people). State, Federal, and Native American lands are present to various extents within the 80-km (50-mi) radius of power plants (NRC 2013a).

During the period from 1960 to 1980, with utilities and local government actively encouraging growth (Metz 1983), commercial and industrial land uses tended to expand within the 16-km (10-mi) radius around nuclear power plants at the expense of agriculture (NRC 2013a). In some instances, the roads and water lines built for plant purposes encouraged residential and industrial growth. As described in Section 2.1, the distance of the nearest resident to a nuclear power plant and ISFSI is typically about 0.4 km (0.25 mi). Recently, local jurisdictions have adopted comprehensive land use or master plans to control residential and commercial growth and preserve agricultural land around nuclear power plants (NRC 2013a).

Commercial nuclear power plant sites are owned and maintained by investor-owned utilities or merchant generators (i.e., independent power producers) that operate the associated power plants. While many plant owners use the land solely for generating electricity, some owners allow other uses for the land. Some plant owners lease land for agricultural (farming) and forestry production, permit cemetery and historical site access, and designate portions of their sites for recreation, management of natural areas, and wildlife conservation. As a result of security concerns after September 11, 2001, licensees have implemented improved site security measures, such as upgraded fencing, reduced site access, and increased signage detailing site access and restrictions (NRC 2013a).

Spent fuel pools are housed in shield buildings at nuclear power plants with boiling water reactors or in fuel buildings at plants with pressurized water reactors (NRC 2013a). Continued storage in spent fuel pools would require only the building housing the spent fuel pool and any cooling system infrastructure that keeps the spent fuel cool. Land requirements for spent fuel pools are small in comparison to the total nuclear power plant site area.

At most operating nuclear power plants, ISFSIs have been constructed to provide increased spent fuel storage because the spent fuel pools have reached capacity. The majority of ISFSIs are located at licensed nuclear power plant sites. Land requirements for ISFSIs (either at operating or decommissioned power plants) are small in comparison to the total power plant site area. Spent fuel storage under either a general license or a site-specific license at an operating reactor consists of the casks, a cask transfer system (i.e., cranes and mobile equipment necessary to move the casks), and reinforced concrete pads on which the casks are placed (NRC 1989). Table 3-1 provides comparisons of land area needed for ISFSIs at various nuclear power plants in contrast to the total land area of power plant sites.

Table 3-1. Land Area Characteristics of Operating Nuclear Power Plants with Site-Specific ISFSI Licenses

Plant	Total Site Area ha (ac)	Land Area Developed for ISFSI ha (ac)	Land Area of Concrete Pad(s) ha (ac)
Calvert Cliffs	843 (2,108)	2.4 (6)	0.2 (0.5)
Diablo Canyon	304 (760)	1.6–2 (4–5)	0.48 (1.2)
Surry	336 (840)	6 (15)	0.2 (0.5)
H.B. Robinson	2,408 (6,020)	0.06 (0.15)	0.016 (0.04)
North Anna	721 (1,803)	4 (10)	0.2 (0.5)
Oconee	204 (510)	1.2 (3)	0.16 (0.4)
Prairie Island	224 (560)	4 (10)	0.16 (0.4)

Sources: NRC 2012a; 2009a; 2008; 2005a,b; 2003; 1992

3.2 Socioeconomics

This section describes the general socioeconomic factors that could be directly or indirectly affected by continued storage. For the GEIS, the NRC assumes that all nuclear power plant sites have constructed ISFSIs by the end of a reactor's licensed life for operation. Further, by this time, the socioeconomic effects of reactor operations have become well established because regional socioeconomic conditions will have adjusted to the presence of the nuclear power plant. In addition, local communities will have adjusted to fluctuations in workforce caused by regularly scheduled refueling and maintenance outages. Changes in employment and tax payments caused by the transition from reactor operations to decommissioning, and the continued storage of spent fuel, can have a direct and indirect effect on public services and housing demand, as well as traffic volumes in the region around each nuclear power plant site.

In general, nuclear power plant sites in the United States are located in one of two broad regional economic settings: rural or semi-urban. Rural areas have relatively simple economies that are based primarily on agricultural activity (NRC 2013a). Rural economies have smaller, less diversified labor markets that are often composed of lower-paying occupations requiring less skill (NRC 2013a). Examples of nuclear power plant sites located in rural environments include Diablo Canyon, Grand Gulf, Oconee, Peach Bottom, Susquehanna, Three Mile Island, and Wolf Creek. Semi-urban areas have more complex economic structures, containing a wider range of industries, with larger and more diverse labor markets (NRC 2013a). Examples of power plant sites in semi-urban areas include Indian Point, Limerick, Millstone, and Palo Verde.

For the purposes of this GEIS, the socioeconomic region of influence is defined by where spent fuel storage workers and their families reside, spend their income, and use their benefits, thereby directly and indirectly affecting the economic conditions of the region. Local and regional communities provide the people, goods, and services needed to support spent fuel

storage operations. Spent fuel storage operations, in turn, provide wages and benefits for people and dollar expenditures for goods and services.

The NRC has prepared several environmental assessments (EAs) for constructing and operating at-reactor ISFSIs. A review of these EAs found that the construction workforce for an ISFSI ranged from approximately 20 to 60 workers for approximately 1 year (NRC 1991a, 2003, 1985). In most cases, the construction workforce was comprised of locally available construction workers and existing power plant operations and security personnel. Since most ISFSIs were constructed during the licensed life of the reactor (including renewed license periods), most reactor licensees added a small number of additional workers (i.e., fewer than three workers) to support ISFSI operations (NRC 1985, 1988, 1991b). No additional workers were required to maintain or monitor continued ISFSI operations for license renewal (NRC 2005a,b, 2009a, 1991a, 2012a).

The number of operations workers at a nuclear plant decreases as the power plant transitions from reactor operations to decommissioning. Compared to the number of workers needed to support nuclear power plant operations (i.e., 600 to 2,400 workers [NRC 2013a]), the storage of spent fuel requires far fewer workers, from 20 to 85 workers. In contrast, decommissioning activities require approximately 100 to 200 workers (NRC 2002). The number of operations workers required for continued storage would depend on current storage operations activities at any given site (e.g., ISFSI and spent fuel pool transfer operations). As noted in Chapter 1 of this GEIS, the environmental impacts of decommissioning are not considered to be part of continued storage.

3.2.1 Employment and Income

Regional socioeconomic conditions associated with continued storage can vary depending on the location of the at-reactor storage site and the size of the storage workforce. Impacts associated with reactor shutdown and decommissioning are discussed with respect to cumulative impacts in Chapter 6 of this GEIS. Some systems that were used during reactor operations would remain in operation to ensure spent fuel pool cooling prior to the transfer of spent fuel from the pool to an ISFSI. After reactor operations cease, a reduced workforce would maintain and monitor the spent fuel pool and ISFSI. The workforce would be further reduced once all spent fuel is transferred to the ISFSI. Workforce numbers would vary from site to site. Fewer than 20 full-time employees monitor and maintain the spent fuel at GEH Morris, an away-from-reactor spent fuel pool storage facility (NRC 2004). In 2005, the Electric Power Research Institute and Maine Yankee Atomic Power Company prepared a report that provides detailed information on the decommissioning of Maine Yankee Atomic Power Station (EPRI and Maine Yankee 2005). At Maine Yankee, approximately 85 workers completed fuel transfer from the spent fuel pool to the ISFSI (EPRI and Maine Yankee 2005). After fuel transfer was completed, overall staffing at Maine Yankee was reduced further (EPRI and Maine Yankee 2005). Currently, Maine Yankee maintains a staff of 30 to 35 workers, which consists of operations and

security personnel (MYAPC 2013). In contrast, at Fort St. Vrain, the licensee estimated that ten workers were needed for ISFSI operations (NRC 1991a).

3.2.2 Taxes

Tax payments to local communities vary widely and the magnitude of tax payments depends on a number of factors including the State tax laws and established tax payment agreements with local tax authorities. These tax payments, whether occurring in rural or semi-urban areas, provide support for public services at the local level (NRC 2013a). After termination of reactor operations, property tax payments would continue to provide revenue, albeit at a reduced rate, for State and local governments to spend on education, public safety, local government services, and transportation. For example during plant operations, Maine Yankee paid approximately $12 million a year to the Town of Wiscasset. Following plant shutdown, the town initially agreed to a reduction in taxes to approximately $6.1 million. Then, subsequent 2-year agreements were reached, and the annual tax liability was reduced to approximately $1 million (EPRI and Maine Yankee 2005). For the 2012–2013 tax year, Maine Yankee paid approximately $1,003,000 in property taxes and fees (MYAPC 2013). Portland General Electric, the licensee for the decommissioned Trojan site, which stopped electrical generation in November 1992, has maintained an at-reactor ISFSI and paid $1,075,228.77 in property taxes for the 2012 tax year (Columbia County 2013). Pacific Gas and Electric, the licensee for Humboldt Bay, which shutdown in July 1976, has maintained an at-reactor spent fuel pool and paid $1,951,266 in property taxes to Humboldt County for the 2012–2013 tax year (PG&E 2012). Connecticut Yankee Atomic Power Company, the licensee for Haddam Neck, which shut down in December 1996, paid approximately $1,200,000 in property taxes for the 2012 tax year to the town of Haddam (CYAPC 2012).

3.2.3 Demography

Nuclear power plants sites and their associated spent fuel pools and ISFSIs are located in a range of political jurisdictions (e.g., towns, townships, service districts, counties, parishes, Native American lands, and states). More than 50 percent of the sites have a population density within an 80-km (50-mi) radius of fewer than 77 persons/km^2 (200 persons/mi^2). In general, the nearest resident to a nuclear power plant is approximately 0.4 km (0.25 mi) (NRC 2013a). Demographic characteristics vary in the region around each nuclear power plant site and may be affected by the remoteness of the nuclear plant to regional population centers (NRC 2013a).

Many communities have transient populations associated with regional tourist and recreational activities, weekend and summer homes, or populations of students who attend regional colleges and other educational institutions. For example, nuclear power plant sites located in coastal regions, such as D.C. Cook and Palisades on Lake Michigan, Oyster Creek on the New Jersey shore north of Atlantic City, and Diablo Canyon north of Avila Beach, have summer, weekend,

and retirement populations and a range of recreational and environmental amenities that attract visitors from nearby metropolitan population centers (NRC 2013a). The regions around Vermont Yankee and Diablo Canyon power stations attract visitors seeking outdoor recreational activities for camping, skiing, and hiking in nearby state parks (NRC 2013a, 2003).

In addition to transient populations, farms and factories in rural communities often employ migrant workers on a seasonal basis. For example, berry production near the D.C. Cook and Palisades Nuclear Plants is a local agricultural activity that employs a sizable migrant labor force in the summer (NRC 2013a).

3.2.4 Housing

Housing markets near nuclear power plant sites, including the spent fuel pools and associated ISFSIs, vary considerably, with wide ranges in the number of housing units, vacancy rates, and the type and quality of housing (NRC 2013a). Although housing demand may be temporarily affected by the number of workers employed at a nuclear power plant site (NRC 2013a), actual housing choices are not likely to be affected by the presence of a nuclear power plant or construction or operation of an ISFSI (NRC 2002). Rather, housing demand and choices are more likely to be in response to housing prices and commutes to a nearby urban area (NRC 2002). Nuclear power plants located in rural communities have relatively small housing markets (i.e., low housing availability), stable housing prices, lower median house values, and moderate and stable vacancy rates. In semi-urban regions, housing markets are likely to change more rapidly with population growth near metropolitan areas (NRC 2013a).

3.2.5 Public Services

Licensees of nuclear power plant sites pay taxes to local and State governments. Revenues from these tax payments support public services at local levels (NRC 2013a). Changes in employment and tax payments caused by the transition from reactor operations to decommissioning and continued storage can have a direct and indirect effect on public services in the region around each nuclear power plant site. Although the most important source of revenue for local communities are property taxes, other sources of revenue include levies of electricity output and direct funding for local educational facilities and programs. As discussed in Section 3.2.2, after termination of reactor operations, property tax payments would continue to provide revenue, albeit at a reduced rate, for State and local governments to spend on public services (e.g., education, public safety, local government services, and transportation).

3.2.6 Transportation

Local and regional transportation networks and traffic volumes in the vicinity of nuclear power plants and associated spent fuel pools and ISFSIs vary considerably depending on the regional population density, location, size of local communities, and the nature of economic development

patterns (NRC 2013a). For continued storage, it is anticipated that roadways used during plant operations would continue to be used for access to the ISFSI after reactor ceases operation. In both rural and semi-rural locations most sites have only one access road, which may experience congestion at peak travel times (NRC 2013a). For further information on transportation networks see Section 3.12.

3.3 Environmental Justice

This section describes the affected environment in the vicinity of at-reactor spent fuel storage sites with respect to environmental justice factors that could occur during continued storage. The environmental justice analysis assesses the potential for disproportionately high and adverse human health or environmental effects on minority and low-income populations that could result from continued storage.

Under Executive Order 12898 (59 FR 7629), Federal agencies are responsible for identifying and addressing potential disproportionately high and adverse human health and environmental impacts on minority and low-income populations. Environmental justice refers to a Federal policy implemented to ensure that minority, low-income, and tribal communities historically excluded from environmental decision-making are given equal opportunities to participate in decision-making processes. In 2004, the Commission issued a Policy Statement on the Treatment of Environmental Justice Matters in NRC Regulatory and Licensing Actions (69 FR 52040), which states "The Commission is committed to the general goals set forth in Executive Order 12898, and strives to meet those goals as part of its National Environmental Policy Act (NEPA) review process" (NRC 2013a).

> ***Executive Order 12898, Federal Actions to Address Environmental Justice in Minority Populations and Low-Income Populations***
>
> "Each Federal agency, whenever practicable and appropriate, shall collect, maintain, and analyze information assessing and comparing environmental and human health risks borne by populations identified by race, national origin, or income. To the extent practical and appropriate, Federal agencies shall use this information to determine whether their programs, policies, and activities have disproportionately high and adverse human health or environmental effects on minority populations and low-income populations" (59 FR 7629).

The Council on Environmental Quality (CEQ) provides the following definitions to consider when conducting environmental justice reviews within the framework of NEPA, in *Environmental Justice: Guidance under the National Environmental Policy Act* (CEQ 1997):

- **Disproportionately High and Adverse Human Health Effects**—Adverse health effects are measured in risks and rates that could result in latent cancer fatalities, as well as other fatal or nonfatal adverse impacts on human health. Adverse health effects may include bodily impairment, infirmity, illness, or death. Disproportionately high and adverse human health

effects occur when the risk or rate of exposure to an environmental hazard for a minority or low-income population is significant (as employed by NEPA) and appreciably exceeds the risk or exposure rate for the general population or for another appropriate comparison group.

- **Disproportionately High and Adverse Environmental Effects**—A disproportionately high environmental impact that is significant (as employed by NEPA) refers to an impact or risk of an impact on the natural or physical environment in a low-income or minority community that appreciably exceeds the environmental impact on the larger community. Such effects may include ecological, cultural, human health, economic, or social impacts. An adverse environmental impact is an impact that is determined to be both harmful and significant (as employed by NEPA). In assessing cultural and aesthetic environmental impacts, impacts that uniquely affect geographically dislocated or dispersed minority or low-income populations or American Indian tribes are considered.
- **Minority individuals**—Individuals who identify themselves as members of the following population groups: Hispanic or Latino, American Indian or Alaska Native, Asian, Black or African American, Native Hawaiian or Other Pacific Islander, or two or more races meaning individuals who identified themselves on a Census form as being a member of two or more races, for example, Hispanic and Asian.
- **Minority populations**—Minority populations are identified when (1) the minority population of an affected area exceeds 50 percent or (2) the minority population percentage of the affected area is meaningfully greater than the minority population percentage in the general population or other appropriate unit of geographic analysis. Minority populations may be communities of individuals living in close geographic proximity to one another, or they may be a geographically dispersed or transient set of individuals, such as migrant workers or American Indians, who, as a group, experience common conditions with regard to environmental exposure or environmental effects. The appropriate geographic unit of analysis may be a political jurisdiction, county, region, or State, or some other similar unit that is chosen so as not to artificially dilute or inflate the affected minority population.
- **Low-income population**—Low-income population is defined as individuals or families living below the poverty level as defined by the U.S. Census Bureau's Current Population Reports, Series P–60 on Income and Poverty (USCB 2007). Low-income populations may be communities of individuals living in close geographic proximity to one another, or they may be a set of individuals, such as migrant workers, who, as a group, experience common conditions.

Consistent with the NRC's Policy Statement (69 FR 52040), affected populations are defined as minority and low-income populations who reside within an 80-km (50-mi) radius of a nuclear power plant site. Data on low-income and minority individuals are usually collected and analyzed at the census tract or census block group level (NRC 2013a).

For the continued storage of spent fuel, the NRC will comply with Executive Order 12898 (59 FR 7629) through implementation of its NEPA requirements in Title 10 of the *Code of Federal Regulations* (CFR) Part 51 by considering impacts to minority and low-income populations in this GEIS. It should be noted, however, that the rulemaking is not a licensing action; it does not authorize the initial or continued operation of any nuclear power plant, and it does not authorize storage of spent fuel. Neither this rulemaking nor this GEIS identify specific sites for NRC licensing actions that would trigger a site-specific assessment.

This GEIS describes the potential human health and environmental effects to minority and low-income populations associated with continued storage of spent fuel at both at- and away-from-reactor ISFSIs. The NRC has determined that, for the purposes of this analysis, a generic analysis of the human health and environmental effects of continued storage on minority and low-income populations is possible.

For site-specific licensing actions, the NRC addresses environmental justice matters by (1) identifying the location of minority and low-income populations that may be affected by long-term storage of spent fuel at nuclear power plant sites, (2) determining whether there would be any potential human health or environmental effects to these populations and special-pathway receptors, and (3) determining if any of the effects may be disproportionately high and adverse. The NRC has and will continue to prepare a site-specific environmental analysis, including an assessment of potential impacts to minority and low-income populations prior to any future NRC licensing action.

As discussed in Section 3.2 of this GEIS, nuclear power plant sites in the United States are located in one of two broad regional economic settings: rural or semi-urban. Demographic characteristics vary in the region around each nuclear power plant site and may be affected by the remoteness of the nuclear plant to regional population centers (NRC 2013a). Nuclear power plants located in both rural and semi-urban areas can have varying concentrations of minority and low-income communities. Prairie Island Nuclear Generating Plant near Red Wing, Minnesota, is an example of a facility in a rural environment. The Prairie Island Indian Community is located immediately next to the Prairie Island Nuclear Generating Plant and is the closest minority population and American Indian community to spent fuel storage pools and an ISFSI.

Subsistence Consumption of Fish and Wildlife

Section 4-4 of Executive Order 12898 (59 FR 7629) directs Federal agencies, whenever practical and appropriate, to collect and analyze information on the consumption patterns of populations that rely principally on fish or wildlife for subsistence and to communicate the risks of these consumption patterns to the public. In this GEIS, the NRC considered whether there were any means for minority or low-income populations to be disproportionately affected by examining impacts to American Indians, Hispanics, migrant workers, and other traditional

lifestyle special-pathway receptors. Special pathways take into account the levels of radiological and nonradiological contaminants in native vegetation, crops, soils and sediments, groundwater, surface water, fish, and game animals on or near power plant sites that have spent fuel storage pools and ISFSIs.

The special-pathway-receptors analysis is an important part of the environmental justice analysis because consumption patterns may reflect the traditional or cultural practices of minority and low-income populations in an area, such as migrant workers or Native Americans. Traditional use of an area can be indicative of properties or resources that are historically significant for a living community to maintain its cultural heritage. These places—called traditional cultural properties—are discussed in Section 3.11 of this GEIS. For example, in the Prairie Island Nuclear Generating Plant license renewal review, the Prairie Island Indian Community provided the NRC information about the traditional use of Prairie Island as a summer encampment for fishing, hunting, gathering medicines and foods, and raising crops. During the review, the Prairie Island Indian Community also expressed concern about native plants on Prairie Island being displaced by invasive species and human health impacts associated with the use of plants that are culturally significant to the Prairie Island Indian Community.

Operating nuclear power plants must have a comprehensive radiological environmental monitoring program to assess the impact of site operations on the environment. During plant operations, nuclear power plant operators collect samples from aquatic pathways (e.g., fish, surface water, and sediment) and terrestrial pathways (e.g., airborne particulates, radioiodine, milk, food products, crops, and direct radiation). Contaminant concentrations found in native vegetation, crops, soils, sediment, surface water, fish, and game animals in areas surrounding nuclear power plants are usually quite low (i.e., at or near the threshold of detection) and are seldom above background levels (NRC 2013a).

3.4 Climate and Air Quality

This section describes the local and regional climate, air quality, and sources of greenhouse gas emissions during continued storage.

3.4.1 Climate

This section describes the climate near spent fuel pools and at-reactor ISFSIs. For this resource area, the License Renewal GEIS (NRC 2013a) provides the baseline description of the affected environment at the start of continued storage. As described in the License Renewal GEIS, weather conditions at nuclear power plant sites vary depending on the year, season, time of day, and site-specific conditions, such as whether the site is located near coastal zones or in or near terrain with complex features (e.g., steep slopes, ravines, and valleys). These

conditions can be generally described by climate zones according to average temperatures. On the basis of temperature alone, there are three major climate zones: polar, temperate, and tropical. Within each of the three major climate zones, there are marine and continental climates. Areas near an ocean or other large body of water have a marine climate. Areas located within a large landmass have a continental climate. Typically, areas with a marine climate receive more precipitation and have a more moderate climate. A continental climate has less precipitation and a greater range in climate. Regional or localized refinements in climate descriptions and assessments can be made by considering other important climate variables and climate-influencing geographic variables, such as precipitation, humidity, surface roughness, proximity to oceans or large lakes, soil moisture, albedo (i.e., the fraction of solar energy [shortwave radiation] reflected from the Earth back into space), snow cover, and associated linkages and feedback mechanisms. Localized microclimates can be defined by considering factors such as urban latent and sensible heat flux and building-generated turbulence. Both national and regional maximum and minimum average annual temperature and precipitation climates over the 30 years from 1971 through 2000 are summarized in Section D.2 in Appendix D of the License Renewal GEIS (NRC 2013a).

The frequency and intensity of tornadoes, straight winds, and wind-borne missiles are a consideration in the design of both spent fuel storage pools and dry cask storage systems. Natural phenomena hazards, including design bases for high winds and wind-borne missiles are considered in the design bases of spent fuel storage facilities, as discussed in Section 4.18.

3.4.2 Greenhouse Gases

Based on assessments by the Global Climate Research Program (GCRP) and the National Academy of Sciences' National Research Council, the U.S. Environmental Protection Agency (EPA) determined that potential changes in climate caused by greenhouse gas (GHG) emissions could endanger public health and welfare (74 FR 66496). The EPA indicated that, while ambient concentrations of GHGs do not cause direct adverse health effects (such as respiratory or toxic effects), public health risks and impacts can result indirectly from changes in climate. Based on the EPA's determination, the NRC recognizes that GHGs contribute to climate change, climate change can affect health and the environment, and mitigation actions are necessary to reduce impacts. The NRC considers carbon dioxide and other GHG emissions in its environmental reviews, and includes consideration of emissions from construction and operation of a facility (NRC 2009b). NRC guidance (NRC 2013c) also addresses consideration of GHGs and carbon dioxide in environmental reviews for new power reactors. Historically, long-term carbon dioxide levels extending back 800,000 years have ranged between 170 and 300 parts per million; the GCRP estimates that present-day carbon dioxide concentrations are about 400 parts per million, higher than at any time in at least the last 1 million years (GCRP 2014).

According to GCRP estimates, carbon dioxide levels at the end of the century will range between 420 and 935 parts per million (GCRP 2014). This corresponds to a projected increase in average temperature through the end of the century of between 2.8° to 5.5°C (5° to 10°F) for a higher GHG emissions scenario, which assumes no efforts to reduce GHG emissions (GCRP 2014). The GCRP also presented the projected change in precipitation from the "recent past" (1970 to 1999) through the end of the century (around 2100). Generally, the GCRP forecasts that future precipitation will increase in northern areas (especially the Northeast and Alaska), while southern areas, particularly the Southwest, will become drier (GCRP 2014).

Three EPA Air Quality Designations

Nonattainment: Any area that does not meet (or that contributes to ambient air quality in a nearby area that does not meet) the national primary or secondary ambient air quality standard for the pollutant.

Attainment: Any area that meets the national primary or secondary ambient air quality standard for the pollutant.

Unclassifiable: Any area that cannot be classified on the basis of available information as meeting or not meeting the national primary or secondary ambient air quality standard for the pollutant.

3.4.3 Criteria Pollutants

The EPA has set National Ambient Air Quality Standards (NAAQS) (40 CFR Part 50) for six criteria pollutants, including sulfur dioxide, nitrogen dioxide, carbon monoxide, ozone, particulate matter (PM; PM_{10}, and $PM_{2.5}$), and lead. Primary NAAQS specify maximum ambient (outdoor air) concentration levels of the criteria pollutants with the aim of protecting public health with an adequate margin of safety.[1] Secondary NAAQS specify maximum concentration levels with the aim of protecting public welfare.[2] States can have their own State Ambient Air Quality Standards. State Ambient Air Quality Standards must be at least as stringent as the NAAQS, and they can include standards for additional pollutants. If a State has no standard corresponding to one of the NAAQS, then the NAAQS apply. The EPA's Tribal Authority Rule (63 FR 7254) also identifies provisions of the Clean Air Act that treat eligible Federally recognized Tribes as States.

The EPA generally designates a nonattainment area based upon air quality monitoring data or modeling studies that show the area violates or contributes to violations of the national

[1]Based on EPA regulations, primary (health-based) standards are requisite to protect public health with an "adequate margin of safety." The margin of safety is intended to address uncertainties associated with inconclusive evidence, and to provide a reasonable degree of protection against hazards that research has not yet identified.

[2]Based on EPA regulations, secondary (welfare-based) standards are requisite to protect the "public welfare" from any known or anticipated adverse effects. Welfare effects include "effects on soils, water, crops, vegetation, man-made materials, animals, wildlife, weather, visibility and climate…" (Hassett-Sipple 2011).

standard. The area also is referred to as an air quality control region, which the EPA designates for air quality management purposes and which typically consists of one or more counties. The EPA designates the area as attainment/unclassifiable if the area meets the standard or expects to meet the standard despite a lack of monitoring data or modeling studies. After the air quality in a nonattainment area improves so that it no longer violates or contributes to violations of the standard and the State or Tribe adopts an EPA-approved plan to maintain the standard, the EPA can re-designate the area as attainment. These areas are known as maintenance areas. In the License Renewal GEIS (NRC 2013a), the NRC identified operating plants located within or adjacent to counties with designated nonattainment areas. The EPA periodically reviews ambient pollution concentrations throughout the country and reclassifies the attainment status of areas. Attainment designation status for areas is presented in 40 CFR Part 81.

Each State develops an implementation plan that includes a strategy for attaining or maintaining the NAAQS, modeling that demonstrates attainment or maintenance, and various rules, regulations, and programs that provide the necessary air pollutant emissions reductions. On tribal lands, Federally recognized Indian tribes can develop their own tribal implementation plans, similar to State implementation plans. If a State or Tribe fails to submit a required plan, the EPA can promulgate a plan known as a Federal implementation plan. In accordance with Section 176(c) of the Clean Air Act and the General Conformity Regulations (40 CFR Part 51 and Part 93), the NRC must analyze its licensing actions to ensure that its Federal action conforms to any applicable implementation plan. Conformity determinations are required when a department, agency, or instrumentality of the Federal government engages in, supports in any way or provides financial assistance for, licenses or permits, or approves any activity to ensure that the activity conforms to an applicable implementation plan. Currently, the General Conformity Regulations (40 CFR Part 51 and Part 93) apply to all Federal actions that are taken in nonattainment or maintenance areas.

The NRC will evaluate and document the need for a conformity determination for the activities within its authority that require an NRC license. These evaluations are completed as part of licensing actions involving new reactors, reactor license renewal, and any specifically licensed ISFSI. Most NRC licensing actions involve emissions well below *de minimis* levels established by the EPA in the General Conformity Regulations (e.g., 100 tons per year for nitrogen oxide emissions [a precursor to ozone] in maintenance areas). As described further in Chapter 4, emissions of criteria pollutants during continued storage are likely to remain below *de minimis* levels at all sites, and a general conformity determination would not be required.

3.5 Geology and Soils

This section describes the geology and soils that have the potential to be affected by continued storage of spent fuel.

The geologic environment of a nuclear power plant consists of the regional physiography, tectonic setting, and composition and physical properties of the bedrock and sedimentary strata underlying the site. Geologic hazards are also a condition of the geologic environment, including faulting and seismicity (NRC 2013a). Seismic hazards are the most ubiquitous of the geologic hazards, and almost all parts in the United States are subject to some potential for earthquake-induced vibrations. The likelihood and intensity of earthquake-induced vibratory ground motion at reactors depend on two factors. First, the number, frequency, and location of earthquakes depend on the site's tectonic setting, tectonic activity, and nature of the seismic sources. Second, the physical characteristics of bedrock and soils beneath the site determine how earthquake energy is attenuated or amplified as it travels from the earthquake sources to the site. Both factors are integral to the development of the earthquake hazard assessments that form the bases for the seismic design of spent fuel pools and dry cask storage systems. Natural phenomena hazards in the design basis of spent fuel storage facilities, including seismic design, are addressed in Section 4.18, "Environmental Impacts of Postulated Accidents."

The general characteristics of nuclear power plants are discussed in Section 2.1.1 of this GEIS, in the License Renewal GEIS, and in environmental statements and environmental impact statements prepared for initial construction and operation of nuclear power plants. All safety-related structures (e.g., seismic category 1 structures) at nuclear power plants are founded either on competent natural or engineered strata to ensure that no safety-related facilities are constructed in potentially unstable materials (NRC 2013a).

During construction of nuclear power plants, soil is disturbed for buildings, roads, parking lots, underground utilities (including cooling-water system intake and discharge systems), aboveground utility structures (including transmission lines), cooling towers, and other structures (NRC 2013a), including at-reactor ISFSIs, which are usually constructed during nuclear power plant operations. Nuclear power plant sites range in size from 34 ha (84 ac) at the San Onofre plant in California to 5,700 ha (14,000 ac) at the Clinton plant in Illinois. At-reactor ISFSIs range in size from 0.06 to 6 ha (0.15 to 15 ac). The proportion of land that remains undisturbed or undeveloped by construction activities varies from site to site.

Soils form over time in response to weathering and erosion of parent materials (underlying bedrock or sediments), and as soils mature, they develop distinct horizons or layers that have varying properties and potential uses. Across the United States, soils have a variety of compositions and related physical properties, depending on the local geologic conditions and climate. The degree of infiltration and the relative movement of groundwater or contaminants through the soils depend on these physical properties.

The geologic resources in the vicinity of each nuclear plant and at-reactor ISFSI vary with the location and land-use activities. For example, where mining operations occur (e.g., sand and gravel pit operations or quarrying for crushed stone), there is little if any interaction between plant operations and local mining industries. However, some nuclear plants may purchase

materials for landscaping and site construction from local sources. Commercial mining or quarrying operations are not allowed within nuclear power plant boundaries (NRC 2013a).

3.6 Surface-Water Quality and Use

This section describes the surface-water use and quality that could be affected by the continued storage of spent fuel in spent fuel pools and at-reactor ISFSIs.

Because nuclear reactor operations rely predominantly on water for cooling, most nuclear power plant sites are located near reliable sources of water. These sources are often surface waterbodies such as rivers, lakes, oceans, bays, and reservoirs and other man-made impoundments (NRC 2013a). The single exception is the Palo Verde Nuclear Generating Station in Arizona, which uses treated municipal wastewater for cooling water. Of the sites in the United States that contain NRC-licensed nuclear power plants, 32 are located near rivers, 22 near lakes and reservoirs, 5 near oceans, and 5 near estuaries and bays. These waterbodies form part of the affected environment for storage of spent fuel in spent fuel pools and at-reactor ISFSIs. Local drainage features at and near nuclear power plant sites, such as creeks and small streams, provide avenues for surface-water movement and interaction with surface waterbodies. Depending on regional precipitation regimes, local topography, and drainage patterns, operation of spent fuel pools and at-reactor ISFSIs may affect the availability and quality of these nearby surface-water resources.

Provisions of the Clean Water Act regulate the discharge of pollutants into waters of the United States. Discharges of cooling water and other plant wastewaters are monitored through the National Pollutant Discharge Elimination System (NPDES) program administered by the EPA, or, where delegated, individual States. An NPDES permit is developed with two levels of controls: (1) technology-based limits and (2) water quality-based limits. The technology-based limits applicable to nuclear power-generating plants are in 40 CFR Part 423. NPDES permit terms may not exceed 5 years (unless administratively continued), and the applicant must reapply at least 180 days prior to the permit expiration date. The NPDES permit contains requirements that limit the flow rates and pollutant concentrations that may be discharged at permitted outfalls. Biocides and other contaminants in discharged cooling waters are governed by NPDES permit restrictions to reduce the potential for toxic effects on nontargeted organisms (e.g., native mussels and fish). NPDES permits impose temperature limits for effluents (which may vary by season) and/or a maximum temperature increase above the ambient water temperature (referred to as “delta-T,” which also may vary by season). Other aspects of the permit may include the compliance measuring location and restrictions against plant shutdowns during winter to avoid drastic temperature changes in surface waterbodies. The permit also may include biological monitoring parameters that are primarily associated with the discharge of cooling water. The intake of cooling water from waters of the United States is regulated under Clean Water Act Section 316(b), and the thermal component of any effluent discharges from

power-generating plants may be regulated by either the applicable State water quality standard or by Clean Water Act Section 316(a).

Wastewater discharge is also covered through NPDES permitting, and it includes biochemical monitoring parameters. Conditions of discharge for each plant are specified in its NPDES permit issued by the State or EPA. Most plants have a stormwater management plan, with the parameter limits of the stormwater outfalls included in the NPDES permit. Plants also may have a spill prevention, control, and countermeasures plan that provides information on potential liquid spill hazards and the appropriate absorbent materials to use if a spill occurs.

In an effort to minimize or eliminate impacts to the water quality of receiving waterbodies, best management practices are typically included as conditions within NPDES permits. Best management practices are measures used to control the adverse stormwater-related effects of land disturbance and development. They include structural devices designed to remove pollutants, reduce runoff rates and volumes, and protect aquatic habitats. Best management practices also include nonstructural or administrative approaches, such as training to educate staff on the proper handling and disposal of potential pollutants.

After cessation of reactor operations at the nuclear power plant sites, water use would be reduced to spent fuel pool cooling, radiation protection for workers, maintenance, human consumption, and personal hygiene.

3.7 Groundwater Quality and Use

This section describes the groundwater use and quality that could be affected by the continued storage of spent fuel in spent fuel pools and at-reactor ISFSIs.

Groundwater, which has been used as a water supply source throughout recorded history, is found in the voids of unconsolidated geologic materials (e.g., sand and gravel), in fractures of consolidated rocks (e.g., sedimentary, metamorphic, igneous, and volcanic rocks), and in conduits/channels of carbonates (e.g., limestone and dolomites). Where groundwater can be found in the subsurface depends on the geologic history of an area. The quantity and quality of groundwater for domestic uses depends on site-specific conditions. Anthropogenic impacts may affect groundwater quality, but those impacts also are site-specific. Both unconfined and confined aquifers that can provide a potential water supply source for domestic use may exist beneath a nuclear power plant site. The type of aquifers and their properties at nuclear power plant sites are site-specific and can vary considerably.

In the eastern United States, most nuclear power plant sites are located in two large regional groundwater provinces: (1) the first is composed of the Atlantic and Eastern Gulf coastal plain, the Southeastern coastal plain, and the Gulf of Mexico coastal plain; and (2) the second is composed of the Central Glaciated and the Central Nonglaciated plains (Back et al. 1988). The

first groundwater province, which extends from New Jersey south to Florida and west along the Gulf of Mexico, includes aquifers that have moderate to very high transmissivity values, moderate to high recharge rates, and moderate- to high-yield wells. In contrast, the second groundwater province, which includes the Great Lakes and upper Midwest, includes aquifers that have moderate to high transmissivity values, lower recharge rates, and low- to moderate-yield wells.

In addition, several nuclear power plant sites are located in the Piedmont and Blue Ridge and the Appalachian Plateau and Valley and Ridge groundwater regions (Back et al. 1988). Aquifers in the Piedmont and Blue Ridge region have low transmissivity values, and while recharge rates are moderate to high, typical wells have very low yields. By contrast, aquifers in the Appalachian Plateau and Valley and Ridge have moderate to high transmissivity values, moderate to high recharge rates, and low to moderate-yield wells.

Two of the four nuclear power plant sites located in the western United States use cooling water from the Pacific Ocean. These two nuclear power plants are located in the Pacific Coast Range region of California. The geologic complexity of this region creates diverse hydrogeologic conditions. Another power plant in the west uses cooling water from the Columbia River, which dissects the prolific bedded basalt aquifer system of the Columbia Lava Plateau, while the fourth, located in the Central Alluvial Basins of the arid desert southwest, uses treated municipal wastewater for cooling (Back et al. 1988).

Many of the nuclear power reactor sites in the United States that are adjacent to lakes, rivers, reservoirs, and engineered cooling ponds are constructed on unconsolidated stream, glacial, and lake deposits that host shallow, unconfined to semi-confined aquifers (Back et al. 1988). Where unconsolidated permeable deposits are thin or not inter-bedded with lower permeability sediments, local groundwater flow systems may be hydraulically connected to deeper, regional to sub-regional groundwater flow systems in underlying permeable unconsolidated deposits, coarse-grained sandstone, carbonate units with solution features, and folded or fractured crystalline rocks. Where shallow aquifers are immediately underlain by thick, impermeable shale or massive, unjointed carbonate strata, there is likely little or no hydraulic connection with deeper, regional groundwater flow systems.

Contaminants may enter an aquifer system and be transported with the hydraulic gradient. The direction and rate of contaminant transport will depend on the site-specific properties of the aquifer. For relatively permeable aquifers with a substantial hydraulic gradient, contaminants would be transported down-gradient quickly. For relatively permeable aquifers with a low hydraulic gradient, contaminants would move very slowly down-gradient. Typically, a contaminant plume would be elongated in the direction of the hydraulic gradient because transverse mixing (transverse dispersion) is much less than in the groundwater flow direction (longitudinal dispersion) (Todd 1960). For relatively low permeable aquifers, contaminants would move very slowly.

As noted in the License Renewal GEIS (NRC 2013a), leaks and spills during the licensed life for operation at reactors have resulted in groundwater and soil contamination. Industrial practices involving the use of solvents, heavy metals, or other chemicals and unlined wastewater lagoons have the potential to contaminate site groundwater, soil, and subsoil. Contamination is subject to State- and EPA-regulated cleanup and monitoring programs (NRC 2013a). In addition, radionuclides, particularly tritium, have been released to groundwater at many plants. Underground system leaks of process water also have been discovered in recent years at several plants. A description of spent fuel pool leaks at NRC-licensed facilities is included in Appendix E.

Because tritium travels through groundwater faster than most other radionuclides, tritium is generally the first radionuclide to be identified in groundwater after a radioactive spill or leak. Records as of December 2013 indicate that, at some time during their operating history, 45 nuclear power plant sites have had leaks or spills involving tritium concentrations in excess of the 20,000 pCi/L drinking water standard established in the Safe Drinking Water Act. Also as of December 2013, 17 sites are reporting tritium concentrations from a leak or spill in excess of 20,000 pCi/L onsite. However, no site is currently reporting tritium in excess of 20,000 pCi/L offsite, or in drinking water (NRC 2013d).

On June 17, 2011, the NRC issued the Decommissioning Planning Rule (76 FR 35512). This rule, through changes to the regulations at 10 CFR 20.1406 and 20.1501, requires licensees to "… minimize the introduction of significant residual radioactivity into the site, including the subsurface, and to perform radiological surveys to identify the extent of significant residual radioactivity at their sites, including the subsurface" (NRC 2012b). As a result, all currently operating NRC-licensed nuclear power plants and any nuclear power plant that may be built in the future are required to perform groundwater monitoring to determine the extent of any existing contamination and to aid in the timely detection of any future contamination. Timely detection of leakage will allow licensees to identify and repair leaks and employ mitigation measures, as necessary, to minimize or eliminate any environmental impacts that would result from leaks.

Licensees that have implemented a groundwater monitoring program consistent with the Nuclear Energy Institute Groundwater Protection Initiative are considered to have an adequate program for the purposes of the Decommissioning Planning Rule (NRC 2011). Additional discussion pertaining to groundwater monitoring can be found in Appendix E of this GEIS.

3.8 Terrestrial Resources

This section describes the general terrestrial resources that could be affected by continued storage of spent fuel in spent fuel pools and at-reactor ISFSIs. Terrestrial plant and animal

communities found on land may be subject to potential effects associated with spent fuel storage facilities (wet storage in spent fuel pools or dry storage in casks).

Nuclear power plants (which include spent fuel pools) and associated ISFSIs (which are located on nuclear power plant sites) are sited in a wide variety of terrestrial habitat types from coastal to intermountain landscapes. Terrestrial habitats vary widely depending on their ecoregion or geographic location, especially in relation to the climate, landforms, and soil characteristics. Surrounding land uses and land forms (e.g., deserts and mountains) significantly influence the local and regional biodiversity and ecosystem. For example, an arid desert location is likely to have less biodiversity than a temperate rainforest. In addition, impacts at the local level in the immediate vicinity of nuclear power plants and associated at-reactor ISFSIs that have relatively intact, functioning ecosystems because of the lack of extensive development and disturbance would provide higher quality habitat and biodiversity as opposed to heavily industrialized areas where larger areas of habitat loss and disturbances decreases habitat quality and biodiversity.

For the purposes of this analysis, terrestrial ecological resources are described in terms of upland vegetation and habitats, lowland and wetland vegetation and habitats, and wildlife.

3.8.1 Upland Vegetation and Habitats

In general, upland terrestrial vegetation and habitats include habitats such as forests, grasslands, and shrublands as opposed to lowland areas. These habitats experience changes, called succession, within the vegetation communities in response to land-disturbing activities. The level of anthropogenic disturbance varies by land-use management activities (see Section 3.1). Typically, areas within the security fence at a nuclear power plant and associated ISFSI have been modified by construction and maintenance activities and are maintained as modified landscapes for operational and security purposes. Some of these areas could contain relatively undisturbed habitat. Disturbed habitats are characterized mainly by grasses, forbs, and shrubs that represent the early successional stage. A maintenance activity, such as mowing and herbicide or pesticide applications, limits the diversity and maturity of plant species that are present. After construction of nuclear power plants and during maintenance activities, non-native plant species and weeds often replace the naturally occurring vegetation, while natural forest or shrubland in various degrees of disturbance may be present outside the security fence (NRC 2013a). The affected habitats for at-reactor continued storage would be similar to habitats described in the License Renewal GEIS because spent fuel pools and at-reactor ISFSIs are located at the nuclear power reactor sites described in the License Renewal GEIS.

Several operational activities at nuclear power plants may have effects on upland vegetative communities and habitats. As described in License Renewal GEIS (NRC 2013a), terrestrial habitats near nuclear power plants can be subject to small amounts of radionuclides. Radionuclides, such as tritium, and other constituents in cooling-water systems, such as

biocides, that enter shallow groundwater can also be taken up by terrestrial plant species. Maintenance activities along nuclear power plant transmission line corridors (cutting vegetation and using herbicides) within the property boundary of a nuclear power plant can contribute to habitat fragmentation and affect the distribution of plant and animal species in areas near the corridors. Nuclear power plants' cooling towers may deposit water (and salt) droplets on vegetation and increase humidity in the area relatively close to the cooling towers during the period that the spent fuel pool is operated. In addition, heat dissipated during power plant operations by a combination of radiation, conduction, and convection can expose terrestrial habitats to elevated temperatures (NRC 2013a).

3.8.2 Lowland and Wetland Vegetation and Habitats

Lowlands along rivers, streams, and coastlines may include floodplains, riparian zones, and several types of wetlands (riverine, palustrine, lacustrine, estuarine, and marine) that support fish and wildlife. As of 2007, wetlands covered an average of 3 percent of the land area near nuclear power plants and at-reactor ISFSIs, as mapped by the National Wetland Inventory (FWS 2007). Wetlands exclude permanently flooded areas that occupy, on average, about 10 percent of the area within 8 km (5 mi) of nuclear power plants (NRC 2013a). Wetland vegetation is hydrophytic (i.e., able to withstand waterlogged conditions) whether anchored on relatively dry land or in standing water. Depending on the wetland type, vegetation can vary widely from flowering plants, grasses, shrubs (reeds, sedges, and rushes), ferns, and trees.

During the initial nuclear power plant license periods, wetlands and riparian communities near nuclear power plants were affected by construction and operation activities (e.g., maintaining power line corridors, dredging wetland sediments, and sediment disposal) that caused stormwater runoff, changes in vegetative plant community characteristics, altered hydrology, decreased water quality and quantity, and sedimentation. Some wetlands and riparian communities have been affected by nuclear power plant cooling systems that can increase the salinity of stream segments, increase water temperatures, and introduce contaminants to wetlands that receive groundwater discharge. However, wetlands have also been created at some power plants that use cooling ponds (NRC 2013a).

3.8.3 Wildlife

Terrestrial animals (i.e., land mammals, insects, birds, amphibians, and reptiles) in the vicinity of a nuclear power plant and associated ISFSI are typical of species found in a particular ecoregion and vary widely across the United States. The removal of vegetation during plant construction and operations have affected the habitat quality and, at some sites, reduced the available habitat by hundreds of acres. Wildlife biodiversity and ecological function in disturbed areas of nuclear power plant sites, including at-reactor ISFSIs, are different from those in undisturbed areas, in part because the wildlife communities supported by disturbed areas are different from those that undisturbed areas support (NRC 2013a). Disruptive human activities (e.g., noise, ground

vibrations, mechanical equipment, vehicles, and physical obstructions) also repel animals that are less tolerant to such disturbances. At the beginning of continued storage, these disturbed and undisturbed areas will be identical to the areas that existed during operations.

Maintenance activities along nuclear power plant transmission line corridors within the property boundary of the plant, which will continue during continued storage, affect the distribution of plant and animal species in areas near the corridors and expose wildlife to nonionizing radiation exposure from transmission line electromagnetic fields (NRC 2013a).

Wildlife species that rely on and use the water resources at the reactor site will continue to be affected by continued storage. For example, the ongoing use of the spent fuel pool cooling system could introduce hazards to some wildlife and could create water-use conflicts with wildlife in the area. Wildlife species that occupy onsite habitats are exposed to a variety of contaminants and factors associated with nuclear power plant and at-reactor ISFSI operations and maintenance. The maintenance required for landscaped areas generally keeps the diversity of wildlife at a reduced level compared to unmaintained surrounding habitats. Wildlife species within the security areas are typically limited by the low quality of the habitat present and generally include common species adapted to industrial developments (NRC 2013a).

3.9 Aquatic Ecology

This section describes the general aquatic resources that could be affected by the continued storage of spent fuel in spent fuel pools and at-reactor ISFSIs. Aquatic biota may be subject to potential effects associated with spent fuel storage facilities (wet storage in spent fuel pools or dry storage in casks).

The information contained in the following sections is a brief summary of aquatic resources known to exist near nuclear power plant sites, which include spent fuel pools and ISFSIs. The majority of this information comes from the License Renewal GEIS (NRC 2013a), which describes a range of potentially affected aquatic resources that may be found in the vicinity of nuclear power plants. The affected environment for at-reactor continued storage would be similar to the affected environment described in the License Renewal GEIS because spent fuel pools and at-reactor ISFSIs are located within power reactor sites, and the end of reactor operations would not significantly alter the affected environment for aquatic resources at most sites. However, when operation of a reactor cooling system ceases, the aquatic environment would be altered to some degree because less water would be withdrawn and discharged. Therefore, less impingement and entrainment would occur and the thermal plume associated with the discharge would be smaller. Once operation of the spent fuel pool ceases, no water would be withdrawn or discharged as a part of continued storage activities. A more detailed account of the range of aquatic environments existing at these facilities can be found in the License Renewal GEIS.

Nuclear power plant sites must be located near waterbodies that are large enough to adequately meet the demands of a plant's cooling systems. At-reactor ISFSIs are generally located near nuclear power plants, and nuclear power plant sites are usually located near marine and estuarine coastal areas, on the Great Lakes, or along major rivers or reservoirs. Several power plants are sited near small streams (e.g., the V.C. Summer plant in South Carolina and the Clinton plant in Illinois), and initial construction activities included impounding the streams to create cooling ponds or reservoirs.

To establish the affected environment for this analysis, aquatic resources are described in terms of aquatic habitats (freshwater rivers, reservoirs, lakes, and coastal estuarine and marine systems) and aquatic biota (fish, macroinvertebrates, zooplankton, phytoplankton and macrophytes, other aquatic vertebrates and invertebrates, and aquatic vegetation).

3.9.1 Aquatic Habitats

A wide range of aquatic habitats occur in the vicinity of U.S. nuclear power plant sites due to differences in geographies, physical conditions (e.g., substrate type, temperature, turbidity, and light penetration), chemical conditions (e.g., dissolved oxygen levels and nutrient concentrations), biological interactions (e.g., consumption of various algal and invertebrate species that provide habitats, such as seagrass or shellfish beds), seasonal influences (including climate change), and man-made modifications. The interactions of these factors often define the specific type of aquatic habitats and communities within a particular area. Three main aquatic ecosystem types occur near nuclear power plant sites: freshwater, estuarine, and marine ecosystems.

3.9.1.1 Freshwater Systems

Freshwater systems are generally classified into two groups based on the degree of water movement. Lentic systems are waterbodies with standing or slow-flowing water, such as ponds, lakes, reservoirs, and some canals. During warmer months, the upper and lower depths will stratify or become two layers that have different temperatures, oxygen content, and nutrient content. Lotic habitats, on the other hand, feature moving water and include natural rivers and streams and some artificial waterways. Most lotic habitats do not stratify (Morrow and Fischenich 2000). Some freshwater aquatic species may occur in both lentic and lotic habitats. However, many species are adapted to the physical, chemical, and ecological characteristics of one system or the other and the overall ecological communities present within these aquatic ecosystem types differ for different regions of the country (NRC 2013a).

A number of major rivers provide cooling water for nuclear power plant sites. The geographic area, gradient of the river bed, substrate, temperature, dissolved oxygen concentration, depth, light penetration, velocity of the current, and source of nutrients and organic matter at the base of the food chain will largely determine species composition and ecological conditions within

riverine environments. In some instances, nuclear power plants that use rivers for cooling are located on sections of rivers that have been impounded, creating reservoirs. Impoundment of a river can alter ecological communities occurring in a given waterbody by blocking movement of aquatic organisms, changing flow and temperature characteristics, adding chemical pollutants, and introducing non-native species. Fish species in numerous reservoirs are often stocked and managed to support local recreational fisheries (NRC 2013a).

Littoral, pelagic, and profundal habitat zones are all found within lentic systems and are classified on the basis of water depth and light penetration in the water. Littoral habitats refer to nearshore shallower waters where sufficient light reaches the bottom to enable rooted plants to grow. Pelagic habitats include open offshore waters where light intensity is great enough for photosynthesis to occur. Profundal habitats are found in deep-water areas where light penetration is insufficient to support photosynthesis (Armantrout 1998). Unique ecological communities inhabit each zone, reflecting the preferences and tolerances of various aquatic species (NRC 2013a).

Aquatic Ecosystem Types

- ***Freshwater***: Waters that contain a salt concentration or salinity of less than 0.5 parts per thousand (ppt) or 0.05 percent.
  - *Lentic*: Stagnant or slow-flowing fresh water (e.g., lakes and ponds).
  - *Lotic*: Flowing fresh water with a measurable velocity (e.g., rivers and streams).
- ***Estuarine***: Coastal bodies of water, where freshwater merges with marine waters. The waterbodies are often semi-enclosed and have a free connection with marine ecosystems (e.g., bays, inlets, lagoons, and ocean-flooded river valleys). Salinity concentrations fluctuate between 0 and 30 ppt, varying spatially and temporally due to location and tidal activity.
- ***Marine***: Waters that contain a salt concentration of about 30 ppt (e.g., ocean overlying the continental shelf and associated shores).

In the Great Lakes, species diversity and biomass of fish are greater nearshore than in the offshore areas since these areas feature habitats and conditions that are favorable for most species of Great Lakes fish for at least some portion of their life cycle (Edsall and Charlton 1997). Threats to the ecological integrity of the Great Lakes include eutrophication (nutrient enrichment), land-use changes, overfishing, invasive species, and pollution (Beeton 2002). Regulations and best management practices have been implemented to reduce nutrient inputs and control land-use changes, such as shoreline alteration and destruction of wetlands. Invasive species, however, have become a major problem as nonindigenous species gain access to the Great Lakes. The introduction of invasive species can result in changes to native ecological communities (NRC 2013a).

3.9.1.2 Estuarine Ecosystems

Brackish to saltwater estuarine ecosystems occur along the coastlines of the United States. General habitat types found within estuarine ecosystems include the mouths of rivers, tidal streams, shorelines, salt marshes, mangroves, seagrass communities, soft-sediment habitats

(e.g., mudflats and shellfish beds), and open water. Estuaries can serve as important staging points during the migration of certain fish species, providing a refuge from predation while physiologically adjusting to the changes in salinity. Numerous marine fish and invertebrate species spawn in or use estuaries as places for larvae and juveniles to develop before moving to marine habitats. Estuarine habitats also support important commercial or recreational finfish and shellfish species (NRC 2013a).

3.9.1.3 Marine Ecosystems

Marine ecosystems occur along the coastline and offshore of the United States. General habitat types within marine ecosystems include the rocky intertidal, rocky subtidal, deep-sea communities, algal communities (e.g., kelp beds), soft-sediment communities (e.g., sandy bottom or mudflats), and the open water or pelagic habitats. Species often compete for space within rocky subtidal and intertidal habitats. The area where species eventually settle is often a tradeoff between accommodating physiological stress and avoiding predation and/or competition with other species. For example, lower depths may provide a more ideal habitat in terms of physical requirements (e.g., temperature, pressure, salinity, and avoiding desiccation), but shallower areas may provide a refuge from predation. As a result, many organisms (including algae, invertebrates, and some fish) that use rocky subtidal and intertidal habitats are restricted to a depth zone that balances physiological and biological pressures (Witman 1987). Marine habitats support important commercial or recreational finfish and shellfish species (NRC 2013a).

3.9.2 Aquatic Organisms

Aquatic organisms are known to occur near nuclear power plant sites. The following discussions provide high-level overviews of aquatic organisms that are known to exist in habitats near nuclear power plant sites. Additional details regarding aquatic organisms and species that occur near nuclear power plant sites are provided in the License Renewal GEIS (NRC 2013a).

3.9.2.1 Fish

Fish can be characterized as freshwater, estuarine, marine, and migratory (e.g., anadromous and catadromous) species. The first three categories are based on salinity regimes. For example, freshwater fish usually inhabit waters with a salinity of less than 0.5 parts per thousand (ppt), although some species can tolerate a salinity as high as 10 ppt; estuarine fish inhabit tidal waters with salinities that range between 0 and 30 ppt; and marine fish typically live and reproduce in coastal and oceanic waters with salinities that are at or more than 30 ppt.

Migratory fish are generally categorized by their migratory patterns, or periodic movements that result in regularly alternating between two or more habitats (Northcote 1978). For example, anadromous species migrate from the ocean waters to freshwater to spawn, while the opposite situation occurs for catadromous species. Amphidromous species also migrate between fresh and saltwater, but these migrations are not related to the reproductive cycle. Potamodromous species migrate entirely within a freshwater system (e.g., some species tend to move to upstream areas for spawning) whereas oceanodromous species migrate entirely within the ocean (e.g., some species tend to move northward as waters warm and southward as they cool). A number of fish species that occur in the vicinity of the power plants are considered commercially or recreationally important, while others serve as forage for those species (NRC 2013a).

Fish are also categorized by where in the waterbody they inhabit. For example, pelagic fish live within the waters that extend from right below the surface to right about the sea floor (or bottom of the waterbody). Demersal fish live on or near the bottom of the sea floor (or bottom of the waterbody) and benthic fish live on the sea floor (or bottom of the waterbody). The distribution of demersal and benthic fish is usually highly dependent on the type of substrate that lines the floor of the waterbody. For example, certain fish prefer soft, sandy bottom habitat, whereas other fish prefer rocky substrates with crevices in which to hide. Other typical bottom water substrates that provide fish habitat include mud flats, kelp beds, submerged aquatic vegetation, salt marshes, mangroves, shellfish beds, and coral reefs.

3.9.2.2 Aquatic Macroinvertebrates

A broad range of aquatic macroinvertebrates may be found near nuclear power plant sites. Macroinvertebrates are responsible for controlling key ecosystem processes, including primary production, decomposition, nutrient regeneration, water chemistry, and water clarity. Mussels consume plankton (i.e., planktivores) and are prey for other organisms. Some macroinvertebrates require good water quality and physical habitat conditions that will support populations of their host fish species. Williams et al. (1993) reported that, of the nearly 300 native freshwater mussels in the United States and Canada, nearly 72 percent are considered endangered, threatened, or of special concern, almost 5 percent are of undetermined status, and less than 24 percent are considered stable. Freshwater mussels occur in the vicinity of most plants that use freshwater as a cooling-water source. Several species of non-native freshwater and saltwater mussels and clams have been introduced to the United States and have reached nuisance levels. These species can alter trophic and nutrient dynamics of aquatic ecosystems and displace native mussels. Many of the nuclear plants have programs in place to monitor for these nuisance species and, as appropriate, to control them, usually using biocides (NRC 2013a).

3.9.2.3 Zooplankton

Zooplankton are small animals that float, drift, or weakly swim in the water column of any waterbody, and include, among other forms, fish eggs and larvae with limited swimming ability, larvae of benthic invertebrates, medusoid forms of hydrozoans, copepods, shrimp, and krill (Euphausiids). Plankton are often categorized by how and where they inhabit the water column, including holoplankton (plankton that spend their entire lifecycle within the water column), meroplankton (plankton that spend a portion of their lifecycle in the water column), and demersal (benthic species that primarily reside on the seafloor but migrate into the water column on a regular basis). Zooplankton play an important role as a trophic link between phytoplankton and fish or other secondary consumers (NRC 2013a).

3.9.2.4 Single-Celled Algae

Phytoplankton, also referred to as microalgae, contain chlorophyll and require sunlight to live and grow. Most phytoplankton are buoyant and float in the upper part of the waterbodies, where sunlight penetrates the water. Phytoplankton are an important food source for some invertebrate and fish species and are important for carbon fixation (converting carbon dioxide to organic materials via photosynthesis). Periphyton (algae attached to solid submerged objects) includes species of diatoms and other algae that grow on natural or artificial substrates.

3.9.2.5 Other Aquatic Invertebrates and Vertebrates

Other important aquatic species include cephalopods (e.g., squid and octopus), freshwater mammals, marine mammals (e.g., seals and whales), sea turtles and other reptiles. Many of these species are protected under various Federal statutes and regulations, such as the Endangered Species Act and the Marine Mammal Protection Act, as further described in Section 3.10.

3.9.2.6 Aquatic Macrophytes

Submerged aquatic vegetation, such as seagrass, provides important habitat for aquatic organisms and is often referred to as underwater meadows or forests. Submerged aquatic vegetation provides food, structurally complex habitat, areas to hide from predators, and breeding and nursery grounds for many aquatic species.

Macroalgae, such as kelp and *Sargassum*, form communities and provide habitat, refugia, and food for other species such as fish and sea turtle hatchlings. Phytoplankton and macroalgae are also important for carbon fixation (converting carbon dioxide to organic materials via photosynthesis).

3.10 Special Status Species and Habitats

Several Federal and State statutes and regulations protect aquatic and terrestrial species and habitats. Federally listed species, critical habitat, essential fish habitat (EFH), and other special status species and habitats are known to occur near nuclear power plant sites (NRC 2013a). The License Renewal GEIS provides additional details on the types of special status species that have occurred near nuclear power plants, such as sea turtles, fish, birds, and other protected species.

Federally listed threatened and endangered species and critical habitat are protected under the Endangered Species Act of 1973 (ESA), while State-listed species and habitats are protected under provisions of various State statutes and regulations. Under Section 7 of the ESA, the NRC must consult with the U.S. Fish and Wildlife Service (FWS) or the National Marine Fisheries Service (NMFS) for actions that could affect Federally listed species or critical habitat. Prior to initial licensing, the NRC would be required to consult with the FWS or the NMFS under Section 7 of the ESA to determine the presence of and potential impacts to any Federally listed species or critical habitat at or near the site. Section 7 ESA consultation could also be required after a license is granted if operations could affect a Federally listed species or designated critical habitat and if the criteria in 50 CFR Part 402 are met for initiation or reinitiation of Section 7 consultation, as described in more detail in Section 4.11. The objective of the consultation is to identify and assess potential impacts to listed species and critical habitat. Any ongoing or proposed activity associated with the operation or maintenance of spent fuel pools or ISFSIs that has the potential to affect a Federally listed species, and meets the criteria in 50 CFR Part 402 for initiation or reinitiation of Section 7 consultation, requires that the NRC initiate or reinitiate ESA Section 7 consultation with the FWS or the NMFS depending on the species. Additional information on how the consultation process is used to identify, evaluate, and mitigate potential impacts to Federally listed species and designated critical habitat is discussed in Chapter 4.

Terms Related to Threatened, Endangered, and Protected Species and Habitats

- ***Endangered Species***: Animal or plant species in danger of extinction throughout all or a significant portion of its range.
- ***Threatened Species***: Animal or plant species likely to become endangered within the foreseeable future throughout all or a significant portion of its range.
- ***Candidate Species***: Animal or plant species for which the FWS or NMFS has on file sufficient information on vulnerability and threats to support a proposal to list it as endangered or threatened.
- ***Proposed Species***: Animal or plant species that is proposed in the *Federal Register* to be listed under Section 4 of the Endangered Species Act.
- ***Designated Critical Habitat***: Specific geographic areas, whether occupied by a listed species or not, that are essential for its conservation and that have been formally designated by rule published in the *Federal Register*.
- ***Essential Fish Habitat***: Those waters and substrates needed by Federally managed marine and anadromous fish for spawning, breeding, feeding, or growth to maturity.

The Magnuson-Stevens Fishery Conservation and Management Act, as amended, calls for the description, identification, and management of EFH to help conserve and manage Federally managed fish and shellfish resources. EFH is defined as "those waters and substrate necessary to fish for spawning, breeding, feeding, or growth to maturity." The NRC must consult with NMFS for any Federal action that may adversely affect EFH. Spent fuel pools that withdraw and discharge water to marine, estuarine, and coastal waters near designated EFH have the potential to affect EFH because they have a potential to alter, damage, or destroy EFH components, thereby affecting the fishery resources that use them (NRC 2013a).

Marine mammals are protected under the Marine Mammal Protection Act of 1972, as amended (MMPA), which also assigns responsibility for managing cetaceans (i.e., porpoises and whales) and most pinnipeds (i.e., seals, fur seals, and sea lions) to the NMFS. The FWS is responsible for managing walruses, polar bears, fissipeds (i.e., otters), and sirenians (i.e., dugongs and manatees). The Act prohibits, with certain exceptions, the "take" (i.e., harming) of marine mammals in U.S. waters. The MMPA has no Federal consultation requirement; therefore, applicants and licensees are directly responsible for compliance with the MMPA. Both the Magnuson–Stevens Act and MMPA are administered by the NMFS.

The Bald and Golden Eagle Protection Act of 1940, as amended, provides for the protection of the bald eagle (*Haliaeetus leucocephalus*) and the golden eagle (*Aquila chrysaetos*) by prohibiting the taking, possession, and commerce of these birds, their nests, or their eggs. The Act prescribes criminal and civil penalties for persons violating the conventions identified in 16 USC 668. In addition, the Migratory Bird Treaty Act of 1918, as amended, protects migratory birds included in the terms of the conventions identified in 16 USC 703. Both acts are administered by the FWS. Similar to the MMPA, these two acts lack Federal consultation requirements; therefore, applicants and licensees are directly responsible for compliance.

The Fish and Wildlife Coordination Act requires the NRC to consult with the FWS and the fish and wildlife agencies of States if a Federal permit or license could impound, divert, or otherwise modify waterbodies. The purpose of the consultation is to prevent loss of and damage to wildlife resources.

The Coastal Zone Management Act of 1972 requires applicants for any NRC license or permit to conduct an activity, in or outside of the coastal zone, that would affect any land or water use or natural resource of the coastal zone to provide to the NRC a certification that the proposed activity complies with any applicable State Coastal Zone Management Plan. An applicant must also provide this certification to the State, and the State must notify the NRC whether the State concurs with the applicant's certification. The NRC cannot issue a license or permit to an applicant until the State has concurred with the applicant's certification.

3.11 Historic and Cultural Resources

This section describes the historic and cultural resources that could be affected by continued storage. For the purposes of this GEIS, the area of potential effect is the area that may be impacted by land-disturbing activities or other operational activities associated with continued storage of spent fuel (whether in spent fuel pools or at an at-reactor ISFSI), including the viewshed. This determination is made irrespective of land ownership or control. A description of these sites, including spent fuel pools and at-reactor ISFSIs, is provided in Section 2.1 of this GEIS.

Historic and cultural resources are the remains of past human activity and include prehistoric era and historic era archaeological sites, historic districts, buildings, or objects with an associated historical, cultural, archaeological, architectural, community, or aesthetic value. Historic and cultural resources also include traditional cultural properties that are important to a living community of people for maintaining their culture. "Historic property" is the legal term for a historic or cultural resource that is eligible for listing on the National Register of Historic Places (NRHP) (NRC 2013a).

Historic Property (36 CFR 800.16(l)(1))

Any prehistoric or historic district, site, building, structure, or object included in, or eligible for inclusion in, the *National Register of Historic Places* maintained by the Secretary of the Interior. Historic properties also include artifacts, records, and remains that are related to and located within such properties. The term includes properties of traditional religious and cultural importance to an Indian Tribe or Native Hawaiian organization and that meet the *National Register* criteria.

The National Historic Preservation Act of 1966 (NHPA) requires Federal agencies to take into account the effects of their undertakings on historic properties. Historic properties are defined as resources that are eligible for listing on the NRHP. The criteria for NRHP eligibility are listed in 36 CFR 60.4 and include, among other things, (1) association with significant events that have made a significant contribution to the broad patterns of history, (2) association with the lives of persons significant in the past, (3) embodiment of distinctive characteristics of type, period, or method of construction, and (4) sites or places that have yielded or may be likely to yield important information in history or prehistory (ACHP 2008). The historic preservation review process (Section 106 of the NHPA) is outlined in regulations issued by the Advisory Council on Historic Preservation in 36 CFR Part 800.

The prehistoric era refers to the period before Europeans arrived in North America in the 1490s. Some of the most heavily used areas during this period were along rivers, lakes, and the seashore. These locations provided freshwater and the most abundant food sources, as well as the most efficient ways to travel. As a result, prehistoric era archaeological sites tend to be found along these waterways. Prehistoric archaeological resources include small temporary camps, larger seasonal camps that were revisited year after year, large village sites that were

occupied continuously over several years or potentially for centuries, or specialized-use areas associated with fishing or hunting or with tool and pottery manufacture (NRC 2013a).

The historic era refers to the period after Europeans arrived in North America. Similar to prehistoric populations, historic era sites tend to be clustered near waterways because water provided a means for transportation and trade, and supported agriculture. Historic era resources include farmsteads, mills, forts, residences, industrial sites (such as mines or canals), and shipwrecks (NRC 2013a).

Traditional cultural properties are historic and cultural resources that are associated with cultural practices or beliefs of a living community, and are often associated with Native American cultures. Traditional cultural properties can be considered historic properties and be included on the NRHP. Examples include traditional gathering areas where particular plants or materials were harvested, locations where a community has traditionally carried out economic, artistic, or other cultural practices important to maintaining its identity, or burial locations that connect individuals or groups with their ancestors. The locations of traditional cultural properties are often kept private; State Historic Preservation Offices can often be unaware of these locations (NRC 2013a).

Historic and cultural resources, especially archaeological sites, are sensitive to disturbance and are nonrenewable. Even a small amount of ground disturbance (e.g., ground clearing and grading) could affect a small but significant resource. Much of the information contained in an archaeological site is derived from the spatial relationships between soil layers and associated artifacts. Once these spatial relationships are altered, they can never be reclaimed. (NRC 2013a)

Nuclear power plant sites are located in areas of focused past human activities (along waterways) and, as such, there is a potential for historic and cultural resources to be present near most nuclear power plants. For example, as part of the recent License Renewal GEIS update, the NRC reviewed historic and cultural resource reviews that were performed for 40 license renewals. For sites that had conducted field investigations, on average, the number of historic and cultural resources present were 35 per site (NRC 2013a). Sites identified included a variety of resources, including village and town sites, and cemeteries (NRC 2013a).

Most existing nuclear power plants in the United States were constructed in the 1960s, 1970s, and early 1980s. Although the NHPA was passed in 1966, the process for complying with the law was developing during the 1970s and early 1980s (NRC 2013a). Many existing nuclear power plant sites were not investigated for the presence of historic and cultural resources prior to initial facility construction. Based on experience from reactor license renewal, early site permit, and combined license environmental reviews, extensive ground-disturbing activities occurred during initial nuclear power plant construction. These construction activities extensively disturbed much of the land in and immediately surrounding the power block.

The term “power block” refers to the buildings and components directly involved in generating electricity at a power plant. At a nuclear power plant, the components of the power block vary with the reactor design, but always include the reactor and turbine building, and usually include several other buildings that house access, reactor auxiliary, safeguards, waste processing, or other nuclear generation support functions. Buildings within the power block require significant excavation of existing material, followed by placement of structural fill for a safe and stable base. Building excavations are extensive, and the area of excavation is larger than the as-built power block, and reactor containment.

It is unlikely that historic and cultural resources are present within heavily disturbed areas of a power plant site. However, less-developed or disturbed portions of a power plant site, including areas that were not extensively disturbed (e.g., construction laydown areas), could still contain unknown historic and cultural resources. Laydown areas are lands that were cleared, graded, and used to support fabrication and installation activities during initial power plant construction. Many ISFSIs have been constructed in less-developed and disturbed areas outside the power block. Based on experience from reactor license renewal, early site permit, and combined license environmental reviews, historic and cultural resource sites tend to occur in less-developed and undeveloped areas of the power plant site. Accordingly, many licensees have developed and implemented historic and cultural resource management plans and procedures that consider and protect known resources and address inadvertent discoveries.

For continued storage, the NRC will consider impacts to historic and cultural resources in this GEIS through its NEPA requirements in 10 CFR Part 51. Neither the rulemaking nor this GEIS identifies specific sites for NRC licensing actions that would trigger Section 106 consultation requirements that are normally conducted during site-specific licensing reviews. This rulemaking is not a licensing action; it does not authorize the initial or continued operation of any nuclear power plant, and it does not authorize storage of spent fuel. This GEIS describes the potential impacts to historic and cultural resources associated with continued storage of spent fuel at both at-reactor and away-from-reactor ISFSIs.

For site-specific licensing actions (i.e., new reactor licensing, reactor license renewal, and site-specific at-reactor and away-from-reactor ISFSIs), applicants are required to provide historic and cultural resource information in environmental reports submitted with license applications. To prepare these assessments, applicants conduct cultural resource surveys and may develop management plans or procedures, if such procedures are not already in place. This information assists the NRC in its review of the potential impacts to historic and cultural resources. As part of these site-specific licensing actions, the NRC has and will continue to comply with the consultation requirements in the NHPA regulations in 36 CFR Part 800 and consult with State Historic Preservation Offices or appropriate Tribal Historic Preservation Officer, Tribal representatives, and other interested parties to determine the area of potential effect and if the proposed licensing action would affect historic properties. As identified in 36 CFR 800.2,

interested parties can include representatives of the local government, the license applicant, the Advisory Council on Historic Preservation, the public, and organizations with a demonstrated interest in the undertaking (proposed licensing action). The NRC will consider information provided by these consulting parties when making determinations under the NHPA. If historic and cultural resources are present within the area of potential effect, identification of historic properties, adverse effects, and potential resolution of adverse effects will be done through consultation and application of the NRHP criteria in 36 CFR 60.4.

3.12 Noise

This section describes noise associated with continued storage. The affected environment is the environment that exists at and around spent fuel pools and at-reactor ISFSIs where continued storage activities would occur. Noise describes unwanted sound that is undesirable because it interferes with speech, communication, or hearing; is intense enough to damage hearing; or is otherwise annoying (NRC 2002). A common sound measurement used to indicate sound intensity is the A-weighted sound level (designated as decibel-A or dB(A)). The decibel expresses sound levels on a logarithmic scale and accounts for the response of the human ear. The noise levels experienced at spent fuel storage locations at a particular point in time depends on what noise generating activities are occurring in the vicinity.

Ambient noise levels depend in part on the amount of development that has occurred in the area around nuclear power plant sites. In rural or low-population areas, background noise levels are typically in a range of 35 to 45 dB(A) (NRC 2013a). In areas where more development has occurred, the surrounding community and highway noise results in baseline noise levels around 60 to 65 dB(A) (NRC 2013a). Over time, the ambient noise levels at a particular location can change as the area experiences changes in development. For example, if new development activities that generate additional noise are initiated, then the ambient noise levels in the area would increase.

Noise can be examined from the perspective of two different receptor groups: workers and the general public. There are no Federal regulations for public exposure to noise. Impacts are primarily evaluated in terms of adverse reactions of the public to noise. The EPA has developed guideline sound levels below which the general public should be protected from activity interference and annoyance. For residential areas, the EPA identified thresholds over a 24-hour period of 45 dB(A) for indoor exposures and 55 dB(A) for outdoor exposures (EPA 1974). At the Federal level, the Occupational Safety and Health Administration regulates noise exposure for workers. The permissible noise exposure limit varies by duration. The limit ranges from 90 dB(A) for a duration of 8 hours per day to 115 dB(A) for 15 minutes or less (29 CFR 1910.95).

Baseline noise characteristics would also include noise generated by spent fuel storage activities. Noise has been assessed in various site-specific, at-reactor ISFSI environmental

reviews, such as the Calvert Cliffs ISFSI license renewal (NRC 2012a) for dry cask storage and the GEH Morris ISFSI license renewal (NRC 2004) for pool storage. Activities that involve construction equipment, such as decommissioning, generate the most ongoing noise, with earthwork and excavation equipment noise levels exceeding 90 dB(A) (NRC 2002). Noise associated with continued storage is primarily limited to mobile sources associated with the movement of spent fuel between the spent fuel pool and the dry cask storage pad (see NRC 2012a).

Proximity is a factor when assessing impacts because noise levels decrease as distance from the source increases. Spent fuel storage facilities typically have large buffer areas between the facility and the nearest receptor. In addition, other barriers such as buildings, vegetation, and topography can also reduce noise levels.

3.13 Aesthetics

Aesthetic resources refer to the visual appeal of a tract of land. The scenic quality of an area may include natural and man-made landscapes and the ways in which the two are integrated. Aesthetic resources can include scenic viewsheds with waterbodies, topographic features, or other visual landscape characteristics. The baseline for evaluation of impacts to aesthetic resources is the existing visual condition of a site. Assessment of potential impacts to aesthetic resources requires evaluation of the degree to which a project would contrast adversely with the existing landscape. Section 2.1 provides a generic description of nuclear power plant sites and storage facilities.

3.14 Waste Management

This subsection describes the various types of wastes generated and managed as a result of the continued storage of spent fuel.

3.14.1 Low-Level Radioactive Waste

Low-level waste (LLW) is radioactive waste that (1) is not classified as high-level radioactive waste, transuranic waste, spent fuel, or byproduct material defined in paragraphs (2), (3), and (4) of the definition of byproduct material set forth in 10 CFR 20.1003.

Almost all LLW generated from reactor operation activities, including management of spent fuel stored in pools and ISFSIs, is shipped offsite, either directly to a disposal facility or to a processing center before being sent to a disposal site. The number of shipments leaving each reactor site varies but generally ranges from a few to about 100 per year. Subpart K of 10 CFR Part 20 discusses the various means by which the licensees may dispose of their radioactive waste. The transportation and land disposal of solid radioactive wastes are performed in accordance with the applicable requirements of 10 CFR Part 71 and 10 CFR Part 61, respectively.

There are currently four operating disposal facilities in the United States that are licensed to accept commercial-origin LLW. They are located in Barnwell, South Carolina; Richland, Washington; Clive, Utah; and Andrews County, Texas. The facility in Utah, operated by EnergySolutions, is licensed to accept only Class A LLW, whereas the other three facilities can accept Class A, B, and C wastes (GAO 2004). In 2001, the South Carolina legislature imposed restrictions on the Barnwell facility such that after June 2008, the facility can accept waste from generators in only three States: South Carolina, New Jersey, and Connecticut. The Barnwell facility is projected to close in 2038 (EnergySolutions 2012). The Richland facility accepts LLW from 11 States: Washington, Alaska, Hawaii, Idaho, Montana, Oregon, Utah, Wyoming, Colorado, Nevada, and New Mexico. It is expected to close in 2056. The EnergySolutions facility in Utah accepts only Class A waste, but the waste can come from any state. This facility currently does not have a projected closing date. The Waste Control Specialists, LLC, site in Texas accepts Class A, B, and C wastes from Texas and Vermont per the Texas Low-Level Radioactive Waste Disposal Compact. In addition, individual waste generators from any other state may apply for an agreement to dispose of their non-Compact generated waste at the Waste Control Specialists, LLC site. For example, waste generators from more than 13 non-Compact States have agreements in place to dispose of waste at this site (TCC 2014). Currently, there is no projected closing date for the Waste Control Specialists, LLC LLW site.

Waste Types Associated with Spent Fuel Storage

Low-level Radioactive Waste (LLW) – radioactive waste not classified as high-level waste, transuranic waste, spent nuclear fuel, or byproduct material. LLW for near surface disposal is classified into Class A, Class B, or Class C waste, and must be disposed of in facilities licensed by the NRC or an NRC Agreement State. Greater-than-class-C (GTCC) waste is not created as a result of continued storage activities and is not within the scope of this GEIS.

Mixed Waste*:* Waste that is both hazardous and radioactive.

Hazardous Waste*:* A solid waste or combination of solid wastes that, because of its quantity, concentration, or physical, chemical, or infectious characteristics, may (1) cause or significantly contribute to an increase in mortality or an increase in serious irreversible or incapacitating reversible illness or (2) pose a substantial present or potential hazard to human health or the environment when improperly treated, stored, transported, disposed of, or otherwise managed (as defined in the Resource Conservation and Recovery Act, as amended, 1976).

Nonradioactive Nonhazardous Waste*:* Waste that is neither radioactive nor hazardous.

Operating nuclear power plants, including activities associated with spent fuel storage, generate LLW generally consisting of air filters, cleaning rags, protective tape, paper and plastic coverings, discarded contaminated clothing, tools, equipment parts, and solid laboratory wastes (all these are collectively known as dry active waste) and wet wastes that result during the processing and recycling of contaminated liquids at the plants. Wet wastes generally consist of spent demineralizer or ion exchange resins, and spent filter material from the equipment drain,

floor drain, and water cleanup systems. The wet wastes are generally solidified, dried, or dewatered to make them acceptable at a disposal site (NRC 2013a).

The quantity of LLW generated by reactor operation, including spent fuel storage in spent fuel pools, varies annually depending on the number of maintenance activities (NRC 2013a). A pressurized water reactor, on average, generates approximately 300 m^3 (10,600 ft^3) and 1,000 Ci (3.7×10^{13} Bq) of LLW per year (Table 6.6 in NRC 2013a). The annual volume and activity of LLW generated at a boiling water reactor are approximately twice the values indicated for a pressurized water reactor. Approximately 95 percent of this waste is Class A (NEI 2013). After reactor operations have ceased, the number and types of activities generating LLW will decrease. Therefore, the annual quantity of LLW generated from storage of spent fuel during continued storage is expected to be a small fraction of that generated while the nuclear power plant is operating because there are less waste generating activities occurring.

3.14.2 Mixed Waste

Wastes that are both radioactive and hazardous are called mixed waste. These wastes are regulated by the EPA or an authorized State for the hazardous component, and by the NRC or an agreement State for the radioactive component. The types of mixed wastes generated in the storage of spent fuel include organics (e.g., waste oils and halogenated organics), metals (e.g., lead, mercury, chromium, and cadmium), solvents, paints, and cutting fluids.

The quantity of mixed waste generated by an operating nuclear power plant is generally relatively small (NRC 2013a). For example, the environmental impact statement (EIS) for the Fermi Unit 3 combined license application stated that less than 0.5 m^3/yr (0.65 yd^3/yr) of mixed waste would be generated during operation (NRC 2013e).

Because of the added complexity of dual regulation, the management and disposal of mixed waste is more problematic than for the other types of wastes. Similar to hazardous waste, mixed waste is generally accumulated onsite in designated areas as authorized under the Resource Conservation and Recovery Act (RCRA), and then shipped offsite for treatment as appropriate and for disposal. The disposal facilities that are authorized to receive mixed waste for disposal are the EnergySolutions facility in Utah and the Waste Control Specialists, LLC, site in Texas.

3.14.3 Hazardous Waste

Hazardous waste is defined by the EPA in 40 CFR Part 261, “Identification and Listing of Hazardous Waste,” as solid waste that (1) is listed by the EPA as being hazardous; (2) exhibits one of the characteristics of ignitability, corrosivity, reactivity, or toxicity; or (3) is not excluded by the EPA from regulation as being hazardous. All aspects of hazardous waste generation, treatment, transportation, and disposal are strictly regulated by the EPA or by the States under

agreement with the EPA per the regulations promulgated under RCRA. Hazardous waste does not contain radioactive waste (and if mixed with radioactive waste would be categorized as "mixed waste," as explained above in Section 3.14.2).

The types of hazardous waste typically generated by nuclear power plants during storage operations include waste paints, laboratory packs, and solvents. The quantities of these wastes generated by an operating nuclear power plant can vary between facilities, but the quantities generally are relatively small when compared with the quantities at most other industrial facilities that generate hazardous waste (NRC 2013a). Nuclear power plants would likely accumulate their hazardous waste onsite as authorized under RCRA and transport it to a treatment facility. Residues remaining after treatment are sent to a permanent disposal facility. There are many RCRA-permitted treatment and disposal facilities available throughout the United States.

3.14.4 Nonradioactive, Nonhazardous Waste

Similar to other industrial activity, the continued storage of spent fuel will generate wastes that are not contaminated with either radionuclides or hazardous chemicals. These wastes include trash, paper, wood, construction and demolition materials, and sanitary wastes (sewage). Nonhazardous solid wastes as defined in 40 CFR Part 261 are collected and disposed of in a local landfill. Sanitary wastes may be treated onsite and the residues sent to local landfills or discharged directly to a municipal sewage treatment facility. Sanitary waste may also be collected in onsite septic tanks, which are emptied periodically, and then the waste is shipped to a local sanitary waste treatment plant. The wastes and sewage are tested for radionuclides before being sent offsite to ensure that no inadvertent contamination occurs. Offsite releases from onsite sewage treatment plants are conducted under NPDES permits. As with operating nuclear power plants, stormwater runoff may be collected and tested before it is discharged offsite (NRC 2013a).

3.14.5 Pollution Prevention and Waste Minimization

Waste minimization and pollution prevention are important elements of operations at all nuclear power plants and at-reactor ISFSIs. Licensees are required to consider pollution prevention measures as dictated by the Pollution Prevention Act of 1990 and RCRA.

In addition, as noted in the License Renewal GEIS and in recent EISs for new reactors and license renewal applications, licensees are likely to have waste-minimization programs in place that are aimed at minimizing the quantities of waste sent offsite for treatment or disposal. Waste-minimization techniques employed by the licensees may include source reduction and recycling of materials either onsite or offsite. The establishment of a waste-minimization program is also a requirement for managing hazardous wastes under RCRA.

3.15 Transportation

The affected environment for transportation associated with continued storage includes the characteristics of the reactor site that support transportation activities, workers involved in transportation activities, and the local, regional, and national transportation networks and populations that use or live along these networks.

All nuclear power plants sites are serviced by controlled access roads. In addition to the access roads, many of the plants also have railroad connections for moving heavy equipment and other materials. Some of the plants that are located on navigable waters, such as rivers, the Great Lakes, or oceans, have facilities to receive and ship loads on barges (NRC 2013a). Power plant sites provide a network of roads and sidewalks for vehicles and pedestrians as well as parking areas for workers and visitors (NRC 2013a).

Local and regional transportation networks in the vicinity of nuclear power plant sites may vary considerably depending on the regional population density, location and size of local communities, nature of economic development patterns, location of the region relative to interregional transportation corridors, and land surface features, such as mountains, rivers, and lakes. The impacts of employee commuting patterns on the transportation network in the vicinity of nuclear power plants depend on the extent to which these factors limit or facilitate traffic movements and on the size of the plant workforce that uses the network at any given time. Impacts at the local level in the immediate vicinity of power plant sites vary depending on the capacity of the local road network, local traffic patterns, and particularly the availability of alternate routes for power plant workers. Given the rural locations of most power plant sites, site traffic has a small impact on the local road system, since often there is not much other traffic on local roads in the immediate vicinity of the plant. Because most sites have only one access road, there may be congestion on this road at certain times, such as during shift changes (NRC 2013a).

For transportation of radioactive material from a nuclear power plant site, the affected environment includes all rural, suburban, and urban populations living along the transportation routes within range of exposure to radiation emitted from the packaged material during normal transportation activities or that could be exposed in the unlikely event of a severe accident involving a release of radioactive material. The affected environment also includes people in vehicles on the same transportation route, as well as people at truck stops and workers who are involved with the transportation activities.

3.16 Public and Occupational Health

This section describes the affected environment during continued storage with respect to the radiological protection of the public and workers. Public radiation doses from natural and

artificial sources other than spent fuel are also described. This section also describes the regulatory framework for protection from occupational hazards.

3.16.1 Radiological Exposure

Nuclear power plants, spent fuel pools, and at-reactor ISFSIs cause doses to members of the public and onsite workers. The Atomic Energy Act of 1954 requires the NRC to promulgate, inspect, and enforce standards that provide an adequate level of protection for public health and safety. The NRC continuously evaluates the latest radiation protection recommendations from international and national scientific bodies to establish the requirements for nuclear power plant licensees. The NRC has established multiple layers of radiation protection limits to protect the public against potential health risks from exposure to effluent discharges from nuclear power plant operations. If licensees exceed a certain fraction of these dose levels in a calendar quarter, they are required to notify the NRC, investigate the cause, and initiate corrective actions within the specified timeframe (10 CFR 20.2201 and 20.2203).

Nuclear power reactors and their associated spent fuel pools and ISFSIs in the United States are licensed by the NRC and must comply with NRC regulations and conditions specified in the license in order to operate. Licensees are required to comply with 10 CFR Part 20, Subpart C, "Occupational Dose Limits for Adults," and 10 CFR Part 20, Subpart D, "Radiation Dose Limits for Individual Members of the Public." Additionally, the EPA provides environmental radiation protection standards for the uranium fuel cycle in 40 CFR Part 190.

Total effective dose equivalent (TEDE): Sum of the effective dose equivalent (for external exposure) and the committed effective dose equivalent (for internal exposure).

Committed effective dose equivalent (CEDE): Sum of the products of the weighting factors for body organs or tissues that are irradiated and the committed dose equivalent to these organs or tissues.

Deep dose equivalent: Applies to external whole body exposure and is the dose equivalent at a tissue depth of 1 cm (0.39 in.).

3.16.1.1 Regulatory Requirements for Occupational Exposure

A plant licensee must maintain individual doses to workers within the 10 CFR 20.1201 occupational dose limits that are summarized in Table 3-2 and incorporate provisions to maintain doses as low as is reasonably achievable. Under 10 CFR 20.2206, the NRC requires licensees to submit an annual report of the results of individual monitoring carried out by the licensee for each individual for whom monitoring was required by 10 CFR 20.1502 during that year. Annually, the NRC publishes a volume of the results of annual reporting of all licensees in the publicly available NUREG–0713, Volume 32, *Occupational Radiation Exposure at Commercial Nuclear Power Reactors and Other Facilities 2010* (NRC 2012c).

Table 3-2. Occupational Dose Limits for Adults Established by 10 CFR Part 20

Tissue	Dose Limit[(a)]
Whole body or any individual organ or tissue other than the lens of the eye	More limiting of 5 rem/yr TEDE to whole body or 50 rem/yr sum of the deep dose equivalent and the committed dose equivalent to any individual organ or tissue other than the lens of the eye
Lens of the eye	15 rem/yr dose equivalent
Skin of the whole body, or skin of any extremity	50 rem/yr shallow dose equivalent

(a) See text box for definitions.
Note: To convert rem to Sievert, multiply by 0.01.

Under 10 CFR 20.2202 and 20.2203, the NRC requires all licensees to submit reports of all occurrences involving personnel radiation exposures that exceed certain control levels. The control levels are used to investigate occurrences and to take corrective actions as necessary. Depending on the magnitude of the exposure, reporting is required immediately, within 24 hours, or within 30 days.

3.16.1.2 Regulatory Requirements for Public Exposure

During continued storage in spent fuel pools, liquid, gaseous, and solid radioactive waste-management systems would be used to collect and treat the radioactive materials produced as byproducts. These systems would process radioactive liquid, gaseous, and solid effluents to maintain releases within regulatory limits and to levels as low as is reasonably achievable before releasing them to the environment. Waste processing systems are designed to meet the design objectives of 10 CFR Part 50, Appendix I, “Numerical Guides for Design Objectives and Limiting Conditions for Operation to Meet the Criterion ‘As Low as is Reasonably Achievable’ for Radioactive Material in Light-Water-Cooled Nuclear Power Reactor Effluents.”

NRC regulations in 10 CFR 72.104 identify criteria for radioactive materials in effluents and direct radiation from an ISFSI. These criteria include that, for normal operations and anticipated occurrences, the annual dose equivalent to any real individual located beyond the controlled area must not exceed 25 mrem (0.25 mSv) to the whole body, 75 mrem (0.75 mSv) to the thyroid, and 25 mrem (0.25 mSv) to any other critical organ as a result of exposure to planned discharges of radioactive materials, direct radiation, and any other radiation from uranium fuel cycle operations within the region. This regulation also requires that operational restrictions be established to meet as low as is reasonably achievable objectives.

3.16.2 Radiological Exposure from Naturally Occurring and Artificial Sources

Table 3-3 identifies background doses to a typical member of the U.S. population. In the table, the annual values are rounded to the nearest 1 percent. A total average annual effective dose equivalent to members of the U.S. population (i.e., 620 mrem/yr) comes from two primary sources: (1) naturally occurring background radiation and (2) medical exposure to patients.

Table 3-3. Average Annual Effective Dose Equivalent of Ionizing Radiation to a Member of the U.S. Population for 2006

Source	Effective Dose Equivalent	
	mrem	Percent of Total
Ubiquitous background		
Radon and thoron	228	37
Natural		
Cosmic	33	5
Terrestrial	21	3
Internal	29	5
Total ubiquitous background	311	50
Medical		
Computed tomography	147	24
Nuclear medicine	77	12
Interventional fluoroscopy	43	7
Conventional radiography and fluoroscopy	33	5
Total medical	300	48
Consumer products	13	2
Industrial, security, medical, educational and research	0.3	0.05
Occupational	0.5	0.08
Total	624.8	100

Source: Adapted from NCRP 2009

Natural radiation sources other than radon result in 13 percent of the typical radiation dose received. The larger source of radiation dose in ubiquitous background (37 percent) is from radon, particularly because of homes and other buildings that trap radon and significantly enhance its dose contribution over open-air living. The remaining 50 percent of the average annual effective dose equivalent consists of radiation mostly from medical procedures (computed tomography, 24 percent; nuclear medicine, 12 percent; interventional fluoroscopy, 7 percent; and conventional radiography and fluoroscopy, 5 percent) and a small fraction from consumer products (2 percent). The consumer product exposure category includes exposure to members of the public from building materials, commercial air travel, cigarette smoking, mining and agricultural products, combustion of fossil fuels, highway and road construction materials, and glass and ceramic products. The industrial, security, medical, education, and research exposure category includes exposure to the members of the public from nuclear power generation; U.S. Department of Energy (DOE) installations; decommissioning and radioactive waste; industrial, medical, education, and research activities; contact with nuclear medicine patients; and security inspection systems. The occupational exposure category includes

exposure to workers from medical, aviation, commercial nuclear power, industry and commerce, education and research, government, the DOE, and military installations. Radiation exposures from occupational activities, industrial, security, medical, educational and research contribute insignificantly to the total average effective dose equivalent.

3.16.3 Occupational Hazards

The Occupational Safety and Health Administration (OSHA) is responsible for developing and enforcing workplace safety regulations. OSHA was created by the Occupational Safety and Health Act of 1970, which was enacted to safeguard the health of workers. Facility conditions that result in an occupational risk, but do not affect the safety of licensed radioactive materials, are under the statutory authority of OSHA rather than the NRC as set forth in a Memorandum of Understanding (53 FR 43950) between the NRC and OSHA. Regardless, occupational hazards can be minimized when workers adhere to safety standards and use appropriate protective equipment; however, fatalities and injuries from accidents can still occur.

3.17 References

10 CFR Part 20. *Code of Federal Regulations*, Title 10, *Energy*, Part 20, “Standards for Protection Against Radiation.” Washington, D.C.

10 CFR Part 50. *Code of Federal Regulations*, Title 10, *Energy*, Part 50, “Domestic Licensing of Production and Utilization Facilities.” Washington, D.C.

10 CFR Part 51. *Code of Federal Regulations*, Title 10, *Energy*, Part 51, “Environmental Protection Regulations for Domestic Licensing and Related Regulatory Functions.” Washington, D.C.

10 CFR Part 61. *Code of Federal Regulations*, Title 10, *Energy*, Part 61, “Licensing Requirements for Land Disposal of Radioactive Waste.” Washington, D.C.

10 CFR Part 71. *Code of Federal Regulations*, Title 10, *Energy*, Part 71, “Packaging and Transportation of Radioactive Material.” Washington, D.C.

10 CFR Part 72. *Code of Federal Regulations*, Title 10, *Energy*, “Licensing Requirements for the Independent Storage of Spent Nuclear Fuel, High-Level Radioactive Waste, and Reactor-Related Greater-Than-Class-C Waste.” Washington, D.C.

29 CFR Part 1910. *Code of Federal Regulations*, Title 29, *Labor*, Part 1910, “Occupational Safety and Health Standards.” Washington, D.C.

36 CFR Part 60. *Code of Federal Regulations*, Title 36, *Parks, Forests, and Public Property*, Part 60, "National Register of Historic Places." Washington, D.C.

36 CFR Part 800. *Code of Federal Regulations*, Title 36, *Parks, Forests, and Public Property*, Part 800, "Protection of Historic Properties." Washington, D.C.

40 CFR Part 50. *Code of Federal Regulations*, Title 40, *Protection of the Environment*, Part 50, "National Primary and Secondary Ambient Air Quality Standards." Washington, D.C.

40 CFR Part 51. *Code of Federal Regulations*, Title 40, *Protection of the Environment*, Part 51, "Requirements for Preparation, Adoption, and Submittal of Implementation Plans." Washington, D.C.

40 CFR Part 81. *Code of Federal Regulations*, Title 40, *Protection of the Environment*, Part 81, "Designation of Areas for Air Quality Planning Purposes." Washington, D.C.

40 CFR Part 93. *Code of Federal Regulations*, Title 40, *Protection of the Environment*, Part 93, "Determining Conformity of Federal Actions to State or Federal Implementation Plans." Washington, D.C.

40 CFR Part 190. *Code of Federal Regulations*, Title 40, *Protection of the Environment*, Part 190, "Environmental Radiation Protection Standards for Nuclear Power Operations." Washington, D.C.

40 CFR Part 261. *Code of Federal Regulations*, Title 40, *Protection of the Environment*, Part 261, "Identification and Listing of Hazardous Waste." Washington, D.C.

40 CFR Part 423. *Code of Federal Regulations*, Title 40, *Protection of the Environment*, Part 423, "Steam Electric Power Generating Point Source Category." Washington, D.C.

50 CFR Part 402. *Code of Federal Regulations*, Title 50, *Wildlife and Fisheries*, Part 402, "Interagency Cooperation—Endangered Species Act of 1973, as Amended." Washington, D.C.

53 FR 43950. October 31, 1988. "Memorandum of Understanding between the Nuclear Regulatory Commission and Occupational Safety and Health Administration; Worker Protection at NRC-licensed Facilities." *Federal Register*, U.S. Nuclear Regulatory Commission, Washington, D.C.

59 FR 7629. February 16, 1994. "Executive Order 12898: Federal Actions to Address Environmental Justice in Minority Populations and Low-Income Populations." *Federal Register,* Executive Office of the President, Washington, D.C.

63 FR 7254. February 12, 1998. "Indian Tribes: Air Quality Planning and Management." *Federal Register,* U.S. Nuclear Regulatory Commission, Washington, D.C.

69 FR 52040. August 24, 2004. "Policy Statement on the Treatment of Environmental Justice Matters in NRC Regulatory and Licensing Actions." *Federal Register,* U.S. Nuclear Regulatory Commission, Washington, D.C.

74 FR 66496. December 15, 2009. "Endangerment and Cause or Contribute Findings for Greenhouse Gases under Section 202(a) of the Clean Air Act." *Federal Register*, U.S. Environmental Protection Agency, Washington, D.C.

76 FR 35512. June 17, 2011. "Decommissioning Planning." *Federal Register*, U.S. Nuclear Regulatory Commission, Washington, D.C.

ACHP (Advisory Council on Historic Preservation). 2008. *National Register Evaluation Criteria*. Washington, D.C. Accession No. ML082880723.

Armantrout, N.B. 1998. *Glossary of Aquatic Habitat Inventory Terminology.* Western Division of American Fisheries Society, Bethesda, Maryland.

Atomic Energy Act of 1954, as amended. 42 USC 2011 *et seq*.

Back, W., J.S. Rosenshein, and P.R. Seaber, eds. 1988. *The Geology of North America: Volume O–2: Hydrogeology*. The Geological Society of America, Boulder, Colorado.

Bald and Golden Eagle Protection Act of 1940, as amended. 16 USC 668–668d *et seq.*

Beeton, A.M. 2002. "Large Freshwater Lakes: Present State, Trends, and Future." *Environmental Conservation* 29(1):21–38, New York, New York.

CEQ (Council on Environmental Quality). 1997. *Environmental Justice: Guidance Under the National Environmental Policy Act*. Executive Office of the President, Washington, D.C. Available at http://www.epa.gov/compliance/ej/resources/policy/ej_guidance_nepa_ceq1297.pdf.

Clean Air Act, as amended. 42 USC 7401 *et seq*.

Clean Water Act (See Federal Water Pollution Control Act of 1972).

Coastal Zone Management Act of 1972, as amended. 16 USC 1451 *et seq.*

Columbia County. 2013. "Summary of Assessment and Tax Roll 2012–13." Columbia County, Mt. St. Helens, Oregon. Accession No. ML13099A042.

CYAPC (Connecticut Yankee Atomic Power Company). 2012. *Haddam Neck Plant Independent Spent Fuel Storage Installation Decommissioning Funding Plan*. East Hampton, Connecticut. Accession No. ML123630241.

Edsall, T. and M. Charlton. 1997. *Nearshore Waters of the Great Lakes.* U.S. Environmental Protection Agency and Environment Canada, Washington, D.C. and Downsview, Ontario. Available at http://www.epa.gov/solec/archive/1996/Nearshore_Waters_of_the_Great_Lakes.pdf.

Endangered Species Act of 1973 (ESA), as amended. 16 USC 1531 *et seq.*

EnergySolutions. 2012. *FY 2012/2013 Least Cost Operating Plan Barnwell Disposal Facility.* BEDL–12–024, Barnwell, South Carolina. Available at http://dms.psc.sc.gov/pdf/matters/0FC14AB1-155D-2817-10B95B39AB319DC1.pdf.

EPA (U.S. Environmental Protection Agency). 1974. *Information on Levels of Environmental Noise Requisite to Protect Public Health and Welfare with an Adequate Margin of Safety*. 550/9–74–004, Washington, D.C.

EPRI and Maine Yankee. 2005. *Maine Yankee Decommissioning Experience Report: Detailed Experiences 1997–2004*. Palo Alto, California and Wiscasset, Maine. Accession No. ML12088A297.

Federal Water Pollution Control Act of 1972, as amended (also referred to as the Clean Water Act). 33 USC 1251 *et seq.*

Fish and Wildlife Coordination Act of 1934, as amended. 16 USC 661-667e *et seq.*

FWS (U.S. Fish and Wildlife Service). 2007. *National Wetlands Inventory.* U.S. Department of the Interior, Washington, D.C. Available at http://www.fws.gov/wetlands/index.html.

GAO (U.S. Government Accountability Office). 2004. *Low-Level Radioactive Waste—Disposal Availability Adequate in Short Term, but Oversight Needed To Identify Any Future Shortfalls*. GAO–04–604, U.S. Nuclear Regulatory Commission, Washington, D.C. Available at http://www.gao.gov/assets/250/242883.pdf.

GCRP (U.S. Global Change Research Program). 2014. *Climate Change Impacts in the United States: The Third National Climate Assessment*. J.M. Melillo, T.C. Richmond, and G.W. Yohe, eds. U.S. Government Printing Office, Washington, D.C. Accession No. ML14129A233.

Hassett-Sipple, B.M. 2011. *National Ambient Air Quality Standards (NAAQS) for Particulate Matter (PM): Current Review—Focus on Primary $PM_{2.5}$ Standards.* EPA/WESTAR Residential Wood Smoke Workshop, Salt Lake City, Utah.

Magnuson-Stevens Fishery Conservation and Management Act, as amended. 16 USC 1801 *et seq.*

Marine Mammal Protection Act of 1972, as amended. 16 USC 1361 *et seq.*

Metz, W. 1983. *Population and Land Use Change in the Vicinity of Operating Nuclear Power Station—An Anthology.* Brookhaven National Laboratory, Upton, New York.

Migratory Bird Treaty Act of 1918, as amended. 16 USC 703–712 *et seq.*

Morrow, J.V. and J.C. Fischenich. 2000. *Habitat Requirements for Freshwater Fishes.* ERDC TN–EMRRPSR–06, U.S. Army Engineer Research and Development Center, Vicksburg, Mississippi. Available at http://el.erdc.usace.army.mil/elpubs/pdf/sr06.pdf.

MYAPC (Maine Yankee Atomic Power Company). 2013. *Maine Yankee Independent Spent Fuel Storage Installation Revised Decommissioning Funding Plan.* Wiscasset, Maine. Accession No. ML130460347.

National Environmental Policy Act of 1969 (NEPA), as amended. USC 4321 *et seq.*

National Historic Preservation Act of 1966 (NHPA), as amended. 16 USC 470 *et seq*.

NCRP (National Council on Radiation Protection and Measurements). 2009. *Ionizing Radiation Exposure of the Population of the United States*. Report 160, Bethesda, Maryland.

NEI (Nuclear Energy Institute). 2013. *Low-Level Radioactive Waste*. Washington, D.C. Accession No. ML13100A276.

Northcote, T.G. 1978. "Migratory strategies and production in freshwater fishes." In S.D. Gerking, ed., *Ecology of Freshwater Fish Production*, Blackwell Science, Oxford, England.

NRC (U.S. Nuclear Regulatory Commission). 1985. *Environmental Assessment Related to the Construction and Operation of the Surry Dry Cask Independent Spent Fuel Storage Installation.* Washington, D.C. Accession No. ML062400262.

NRC (U.S. Nuclear Regulatory Commission). 1988. *Environmental Assessment Related to the Construction and Operation of the Oconee Nuclear Station Independent Spent Fuel Storage Installation*. Washington, D.C. Accession No. ML123480209.

NRC (U.S. Nuclear Regulatory Commission). 1989. *Environmental Assessment and Finding of No Significant Impact for Proposed Rule Entitled, "Storage of Spent Nuclear Fuel in NRC-Approved Storage Casks at Nuclear Power Reactor Sites*." Washington, D.C. Accession No. ML051230231.

NRC (U.S. Nuclear Regulatory Commission). 1991a. *Environmental Assessment Related to Construction and Operation of the Fort St. Vrain Independent Spent Fuel Storage Installation*. Docket No. 72–009, Public Service Company of Colorado, Washington, D.C. Accession No. ML062710252.

NRC (U.S. Nuclear Regulatory Commission). 1991b. *Environmental Assessment Related to the Construction and Operation of the Calvert Cliffs Independent Spent Fuel Storage Installation*. Washington, D.C. Accession No. ML022550053.

NRC (U.S. Nuclear Regulatory Commission). 1992. *Environmental Assessment Related to Construction and Operation of the Prairie Island Independent Spent Fuel Storage Installation*. Washington, D.C. Accession No. ML090260415.

NRC (U.S. Nuclear Regulatory Commission). 2002. *Final Generic Environmental Impact Statement on Decommissioning of Nuclear Facilities, Supplement 1 Regarding the Decommissioning of Nuclear Power Reactors.* NUREG–0586, Volumes 1 and 2, Washington, D.C. Accession Nos. ML023470327, ML023500228.

NRC (U.S. Nuclear Regulatory Commission). 2003. *Environmental Assessment Related to the Construction and Operation of the Diablo Canyon Independent Spent Fuel Storage Installation*. Washington, D.C. Accession No. ML032970370.

NRC (U.S. Nuclear Regulatory Commission). 2004. *Environmental Assessment for the License Renewal of the General Electric Morris Operation Independent Spent Fuel Storage Installation in Morris, Illinois.* Washington, D.C. Accession No. ML043360415.

NRC (U.S. Nuclear Regulatory Commission). 2005a. *Environmental Assessment Related to the Renewal of the H.B. Robinson Steam Electric Plant, Unit No. 2 Independent Spent Fuel Storage Installation License Special Nuclear Materials License No. SNM–2502*. Washington, D.C. Accession No. ML050700137.

NRC (U.S. Nuclear Regulatory Commission). 2005b. *Environmental Assessment Related to the Renewal of the License for the Surry Independent Spent Fuel Storage Installation*. Washington, D.C. Accession No. ML040560238.

NRC (U.S. Nuclear Regulatory Commission). 2005c. *Environmental Assessment Related to the Construction and Operation of the Humboldt Bay Independent Spent Fuel Storage Installation.* Washington, D.C. Accession No. ML052430106.

NRC (U.S. Nuclear Regulatory Commission). 2008. *North Anna Independent Spent Fuel Storage Installation, Final Safety Analysis Report.* Revision 6, Washington, D.C. Accession No. ML110180557.

NRC (U.S. Nuclear Regulatory Commission). 2009a. *Environmental Assessment for the Renewal of U.S. Nuclear Regulatory Commission License No. SNM–2503 for Oconee Nuclear Power Station Independent Spent Fuel Storage Installation*. Washington, D.C. Accession No. ML091340557.

NRC. (U.S. Nuclear Regulatory Commission). 2009b. "Memorandum and Order in the Matter of Duke Energy Carolinas, LLC and Tennessee Valley Authority [Greenhouse Gas Emissions]." CLI–09–21, Washington, D.C. Accession No. ML093070690.

NRC (U.S. Nuclear Regulatory Commission). 2011. Policy Issue (Information) from R.W. Borchardt to The Commissioners dated February 9, 2011, regarding "Senior Management Review of Overall Regulatory Approach to Groundwater Protection." SECY–11–0019, Washington, D.C. Accession No. ML110050525.

NRC (U.S. Nuclear Regulatory Commission). 2012a. *Environmental Assessment for the Proposed Renewal of U.S. Nuclear Regulatory Commission License No. SNM–2505 for Calvert Cliffs Nuclear Power Plant, LLC's Independent Spent Fuel Storage Installation*. Washington, D.C. Accession No. ML121220084.

NRC (U.S. Nuclear Regulatory Commission). 2012b. *Predecisional Draft—Proposed Draft Guidance Decommissioning Planning During Operations.* Washington, D.C. Accession No. ML12179A246.

NRC (U.S. Nuclear Regulatory Commission). 2012c. *Occupational Radiation Exposure at Commercial Nuclear Power Reactors and Other Facilities 2010: Forty-Third Annual Report*. NUREG–0713, Volume 32, Washington, D.C. Accession No. ML120950282.

NRC (U.S. Nuclear Regulatory Commission). 2013a. *Generic Environmental Impact Statement for License Renewal of Nuclear Plants.* NUREG–1437, Revision 1, Washington, D.C. Accession No. ML13107A023.

NRC (U.S. Nuclear Regulatory Commission). 2013b. *2013–2014 Information Digest.* NUREG–1350, Volume 25, Washington, D.C. Accession No. ML13241A207.

NRC (U.S. Nuclear Regulatory Commission). 2013c. *Attachment 1—Staff Guidance for Greenhouse Gas and Climate Change Impacts for New Reactor Environmental Impact Statements*. COL/ESP-ISG-026, Washington, D.C. Accession No. ML12326A811.

NRC (U.S. Nuclear Regulatory Commission). 2013d. *List of Historical Leaks and Spills at U.S. Commercial Nuclear Power Plants*. Revision 12, Washington, D.C. Accession No. ML101270439.

NRC (U.S. Nuclear Regulatory Commission). 2013e. *Environmental Impact Statement for Combined Licenses (COL) for Enrico Fermi Unit 3 Final Report*. NUREG–2105, Volumes 1 and 2, Washington, D.C. Accession Nos. ML12307A172, ML12307A176.

Occupational Safety and Health Act of 1970. 29 USC 651 *et seq*.

PG&E (Pacific Gas and Electric Company). 2012. "PG&E Making $157 Million in Property Tax Payments to 49 California Counties." News and Perspectives from Pacific Gas and Electric Company, San Francisco, California. Accession No. ML13099A045.

Pollution Prevention Act of 1990. 42 USC 13101 *et seq*. (1990).

Resource Conservation and Recovery Act of 1976 (RCRA). 42 USC 6901 *et seq*.

Safe Drinking Water Act, as amended. 42 USC 300f. *et seq*.

TCC (Texas Low Level Radioactive Waste Disposal Compact Commission). 2014. Imports. Austin, Texas. Available at http://www.tllrwdcc.org/imports.

Todd, D.K. 1960. *Groundwater Hydrology.* Second Edition, New York, New York.

USCB (U.S. Census Bureau). 2007. *Current Population Reports*. Series P60, Washington, D.C. Available at http://www.census.gov/main/www/cprs.html.

Williams, J.D., M.L. Warren, K.S. Cummings, J.L. Harris, and R.J. Neves. 1993. "Conservation Status of Freshwater Mussels of the United States and Canada." *Fisheries* 18:6–22, Philadelphia, Pennsylvania.

Witman, J.D. 1987. "Subtidal Coexistence: Storms, Grazing, Mutualism, and the Zonation of Kelps and Mussels." *Ecological Monographs* 55:421–445, Ithaca, New York.

4.0 Environmental Impacts of At-Reactor Continued Storage of Spent Fuel

This chapter evaluates the environmental impacts of continued at-reactor storage of spent nuclear fuel (spent fuel) in a spent fuel pool or independent spent fuel storage installation (ISFSI). The U.S. Nuclear Regulatory Commission (NRC) evaluated the environmental impacts of at-reactor continued storage for three timeframes: short-term storage, long-term storage, and indefinite storage. Chapter 2 provides descriptions of the various activities that occur during continued storage. The environmental impacts of away-from-reactor ISFSI storage are evaluated in Chapter 5.

In the short-term storage timeframe, the NRC evaluates the impacts of continued storage of spent fuel for 60 years beyond the licensed life for operations of a reference reactor. The NRC assumes that all spent fuel has been transferred from the spent fuel pool to an ISFSI by the end of this 60-year timeframe. The NRC also assumes that a repository becomes available by the end of this 60-year timeframe.

Short-term storage of spent fuel for 60 years beyond licensed life for operations includes the following:

- continued storage of spent fuel in spent fuel pools (at-reactor only) and ISFSIs,
- routine maintenance of spent fuel pools and ISFSIs (e.g., maintenance of concrete pads), and
- handling and transfer of spent fuel from spent fuel pools to ISFSIs.

The NRC then evaluates the impacts of continued storage for another 100 years after short-term storage. This 100-year timeframe is referred to as the long-term storage timeframe. The *Generic Environmental Impact Statement for Continued Storage of Spent Nuclear Fuel* (GEIS) assumes that a repository would become available by the end of the 100-year timeframe (160 years total continued storage after the end of the reactor's licensed life for operation).

Long-term storage activities include the following:

- continued storage of spent fuel in ISFSIs, including routine maintenance,
- one-time replacement of ISFSIs and spent fuel canisters and casks, and
- construction and operation of a dry transfer system (DTS) (including replacement).

The NRC also evaluates the environmental impacts of a third timeframe that assumes a repository does not become available, thus requiring onsite storage in spent fuel pools until the

end of the short-term storage timeframe and storage in ISFSIs indefinitely. The activities during the indefinite storage timeframe are the same as those that would occur for long-term storage; however, without a repository these activities occur repeatedly. Figure 1-1 provides a graphical representation of the three timeframes.

Section 1.8.3 provides a list of the assumptions made in this GEIS regarding continued storage. Impacts from decommissioning the spent fuel pool, ISFSI, and DTS are not evaluated in this chapter but are considered in the cumulative impacts analysis in Chapter 6, as are the impacts from spent fuel transportation to a repository. Construction of a new spent fuel pool cooling system, to support decommissioning, is also addressed in the cumulative impacts analysis. The environmental impacts of operating a new cooling system during continued storage are bounded by the impacts of an operating reactor and are therefore not discussed further in this chapter. The NRC assumes that the initial at-reactor ISFSIs would be constructed under a general or site-specific license during the term of reactor operations (including license renewal); therefore, the construction impacts of these initial at-reactor ISFSIs are not specifically analyzed in this GEIS, but are taken into account in establishing the baseline affected environment described in Chapter 3. These ISFSIs would, however, be subject to periodic relicensing reviews and accompanying environmental reviews under the National Environmental Policy Act of 1969 (NEPA). Further, the NRC assumes that the ISFSIs are completely replaced every 100 years. This replacement activity would require separate site-specific authorization from the NRC before the start of any replacement activities. NRC authorization to relicense or replace an ISFSI and NRC authorization to construct, operate, and replace a DTS are separate licensing actions that would require an NRC review. They are considered Federal actions under NEPA and would be undertakings under the National Historic Preservation Act (NHPA).

As discussed in Chapter 2, there are two existing away-from-reactor ISFSIs—the GEH Morris and Three Mile Island Unit 2 (TMI-2) ISFSIs. However, as explained below, the environmental impacts described in this chapter for at-reactor ISFSIs are representative of the impacts at both of these away-from-reactor ISFSIs.

- The GEH Morris ISFSI is at the site of a spent fuel reprocessing facility (a production facility) that was constructed by General Electric, but never operated. Because it was to be a production facility licensed under siting and safety requirements similar to those for reactors (e.g., Title 10 of the *Code of Federal Regulations* Part 50 [10 CFR Part 50], "Domestic Licensing of Production and Utilization Facilities"), the GEH Morris facility is sited and constructed in a manner substantially similar to a reactor spent fuel pool. In fact, it is currently licensed to store 352 pressurized water reactor (PWR) fuel assemblies and 2,865 boiling water reactor (BWR) fuel assemblies, for a total of about 714 MTU, which is no more than the licensed capacity of many BWR spent fuel pools. Therefore, the environmental impacts described in the following chapters of this GEIS for at-reactor spent fuel pools are representative of the impacts at the GEH Morris facility.

- The TMI–2 ISFSI is a modified NUHOMS spent fuel storage system (designated NUHOMS-12T) with 30 horizontal storage modules (DOE 2012). It was licensed by the NRC in March 1999 and contains spent fuel from the damaged TMI-2 reactor (a single reactor core). Although the NUHOMS–12T storage module contents are core debris (not fuel assemblies) and the debris storage canisters could not be treated like fuel cladding, the design of the NUHOMS–12T accounts for these technical differences. Each NUHOMS–12T module provides for the horizontal dry storage of up to 12 TMI–2 stainless-steel canisters inside a dry shielded canister, which is placed inside a concrete horizontal storage module. The NUHOMS–12T modification includes venting of the dry shielded canister through high-efficiency particulate air grade filters during storage. The vent system allows for release of hydrogen gas, generated due to radiolysis, and monitoring and/or purging of the system during operation (DOE 2012). The TMI–2 ISFSI is actually no larger than a typical at-reactor ISFSI and meets the same NRC regulatory standards as at-reactor ISFSIs. Therefore, the environmental impacts described in this chapter for at-reactor ISFSIs are representative of the impacts at the TMI–2 ISFSI.

In this chapter, the NRC uses the License Renewal GEIS (NRC 2013a) to inform some of the impact determinations regarding continued storage. In many of these cases, the analysis in this GEIS considers how the environmental impacts of continued storage compare to the impacts considered in the License Renewal GEIS. In the License Renewal GEIS, the NRC evaluated the potential impacts in each resource area by reviewing previous environmental analyses for past license renewal reviews, scientific literature, and other available information. Where appropriate, this GEIS also considers analyses and impact determinations made in previous ISFSI licensing and renewal environmental assessments (EA) and environmental impact statements (EISs) and in reactor license renewal and new reactor licensing EISs to inform the impact determinations in this analysis.

Sections 4.1 through 4.17 evaluate the potential impacts on various resource areas, such as land use, air quality, water quality, transportation, and public health. Sections 4.18 and 4.19 discuss accidents and terrorism. Section 4.20 provides a summary of the environmental impacts and Section 4.21 contains the references. Within each resource area, the NRC has provided an analysis of the potential impacts for the short-term storage timeframe, the long-term storage timeframe, and indefinite storage and provided an impact determination—SMALL, MODERATE, or LARGE—for each timeframe. The definitions of SMALL, MODERATE, and LARGE are provided in Section 1.8.5. For some resource areas, the impact determination language is specific to the authorizing regulation, executive order, or guidance.

4.1 Land Use

This section describes land-use impacts caused by the continued storage of spent fuel in spent fuel pools and at-reactor ISFSIs.

4.1.1 Short-Term Storage

Spent fuel pool operations during the short-term storage timeframe would not require the use of any land beyond that which was cleared and graded during nuclear power plant construction. Continued operation of the spent fuel pool during short-term storage is not anticipated to require new or additional monitoring or maintenance activities that would affect current land use. In addition, inspection, testing, and surveillance activities that are conducted throughout the life of spent fuel pools necessary to ensure compliance with Federal, State, and local requirements regarding the environment and public safety are not expected to affect land-use conditions (NRC 2013a).

As described in Section 3.1, most nuclear power plant sites have constructed ISFSIs for onsite dry cask storage of spent fuel. Dry cask storage at operating nuclear power plant sites provides supplemental storage for portions of the spent fuel pool inventory. As further described in Section 3.1, only a small fraction of the land committed for a nuclear power plant is required to construct and operate an ISFSI (see Table 3-1).

Operation of an ISFSI involves removing the spent fuel from spent fuel pools, packaging the spent fuel in dry casks, and placing the dry casks on concrete storage pads. ISFSI operations would not require the use of any land beyond that which was cleared and graded during facility construction. The ISFSI would be surrounded by security fencing to restrict and control access in accordance with requirements for the protection of stored spent fuel in 10 CFR 73.51. Only a small portion of the land committed for a nuclear power plant is required for an at-reactor ISFSI (see Table 3-1). Therefore, access restrictions associated with operation of an ISFSI during the short-term storage timeframe would affect only a small amount of land within the larger nuclear plant site.

ISFSIs are designed as passive systems that require no power or regular maintenance other than routine visual inspections and checks of the cask ventilation system (e.g., for blockages of ducts). Continued operation of an at-reactor ISFSI is not anticipated to require new or additional maintenance activities that would affect current land use. The NRC has prepared several EAs for site-specific licenses for construction and operation of at-reactor ISFSIs (NRC 2012a, 2005a, 2003, and 1992).

Based on the assessment above, 60 years of continued at-reactor storage in a spent fuel pool or at-reactor ISFSI would not require disturbance of any new land at a nuclear power plant or result in operational or maintenance activities that would change the current land use. Therefore, the NRC concludes that the potential environmental impact on land use would be SMALL during the short-term storage timeframe.

4.1.2 Long-Term Storage

The potential environmental impacts on land use from long-term storage in an ISFSI would be similar to those described for short-term storage. Only a small fraction of the land committed for a nuclear power plant is required for an ISFSI (see Table 3-1). Operation and maintenance of an ISFSI would not require the use of any land beyond that which was already cleared and graded during facility construction. Access restrictions associated with operation of an ISFSI during the long-term storage timeframe would affect only a small amount of land within the larger nuclear plant site.

During long-term storage, in addition to routine maintenance and monitoring, the NRC assumes that a DTS is constructed and operated to facilitate the transfer, handling, and repackaging of spent fuel after the end of the short-term timeframe. As described in Section 2.1.4, the reference DTS considered in this GEIS consists of two major structures: (1) a two-level concrete and steel structure that provides confinement and shielding during fuel-transfer, handling, and repackaging operations and (2) an attached, single-level steel building for receipt and handling of the spent fuel transportation packages. These two major structures would be constructed on a reinforced-concrete basemat that would occupy about 0.04 ha (0.1 ac). Maintenance and monitoring activities associated with a DTS would include routine inspections and testing of the spent fuel and cask transfer and handling equipment (e.g., lift platforms and associated mechanical equipment) and process and effluent radiation monitoring, which do not require the use of any land beyond that which would be cleared and graded during DTS construction.

As described in Section 3.1, the physical area required for operating a commercial nuclear power plant site ranges from 34 ha (84 ac) to 5,700 ha (14,000 ac) (NRC 2013a). Therefore, only a small fraction of the land committed for a nuclear power plant would be required to construct and operate a DTS. Once the DTS is constructed, access to the facility site would be restricted, in accordance with 10 CFR Part 73, to activities that support facility operations. The restricted access area for the reference DTS described in Section 2.1.4 is about 0.7 ha (2 ac).

The NRC assumes that the at-reactor ISFSI and DTS would be replaced during the long-term storage timeframe. The number of storage casks that would be replaced and the size of the replacement concrete storage pad would depend on the remaining inventory of spent fuel to be transported to a permanent repository after the 100-year timeframe. The replacement facilities for the at-reactor ISFSI and DTS would be constructed on land near the existing facilities.

Long-term storage of spent fuel at an at-reactor ISFSI would not result in operational or maintenance activities that would change land-use conditions. Construction and operation of a DTS and replacement of the ISFSI and DTS would affect a small fraction of the land already committed for a nuclear power plant. Therefore, the NRC concludes that the environmental impacts on land use during the long-term storage timeframe would be SMALL.

4.1.3 Indefinite Storage

This section describes the potential environmental impacts on land use if a repository is not available to accept spent fuel. For this analysis, the NRC assumes that spent fuel would continue to be stored in at-reactor ISFSIs indefinitely. The potential environmental impacts on land use from indefinite storage would be similar to those described for long-term storage.

Aging management is assumed to include replacement of the ISFSI and DTS every 100 years and necessitate repackaging of spent fuel at a DTS. Replacement of the ISFSI and DTS would occur on land near existing facilities. The older ISFSI and DTS would be demolished, and the land reclaimed.

Access to the ISFSI and DTS would be restricted to activities that support facilities operations in accordance with 10 CFR Part 73. Restricted access under the indefinite storage timeframe would result in land that would not be available for other productive land uses for an indefinite amount of time. However, as noted previously, only a small portion of the land already committed for a nuclear power plant is required for an at-reactor ISFSI and DTS. Therefore, the amount of land that would not be available for other land uses under the indefinite storage timeframe would be small.

Indefinite storage of spent fuel in at-reactor ISFSI facilities would not result in operational or maintenance activities that would change land-use conditions. Construction of a DTS and replacement of the ISFSI and DTS every 100 years would affect a small fraction of the nuclear plant site. After replacement, the older ISFSI and DTS would be demolished and the land would be reclaimed. Therefore, the NRC concludes that the environmental impacts on land use from indefinite storage would be SMALL.

4.2 Socioeconomics

This section describes the socioeconomic factors that could be directly or indirectly affected by continued storage of spent fuel in spent fuel pools and at-reactor ISFSIs. Changes in employment and tax payments caused by continued storage can have a direct and indirect effect on public services and housing demand, as well as traffic volumes in the communities in the region around each nuclear power plant site. As discussed in Chapter 3, the socioeconomic region of influence is where spent fuel storage workers and their families reside, spend their income, and use their benefits, thus directly and indirectly affecting the economic conditions of the region.

4.2.1 Short-Term Storage

During the short-term storage timeframe, some systems used during reactor operations would remain in operation to ensure spent fuel pool cooling prior to the transfer of spent fuel from the

pools to an at-reactor ISFSI. A small number of workers—likely between 20 and 85—would continue to maintain, monitor, and transfer spent fuel from spent fuel pools to an at-reactor ISFSI after the cessation of reactor operations. A small number of workers (30–35) would also continue to maintain and monitor the at-reactor ISFSI. Because the existing storage workforce would remain to monitor and maintain storage facilities after reactor operations cease, there would be no need for any additional spent fuel pool and at-reactor operations workers.[1] Therefore, there would be no increase in demand for housing and public services because of continued storage. Continued storage activities are also not likely to affect local transportation conditions in the vicinity of the storage facility. Transportation activities would continue at reduced levels after the cessation of reactor operations as spent fuel storage operations and decommissioning workers would continue to commute to the site. The number of commuting storage operations workers, however, would be reduced after all spent fuel has been transferred from the pool to an ISFSI.

The amount of tax payments during the short-term storage timeframe would depend on a number of factors, including State tax law and established tax payment agreements with local tax authorities. Property tax and other payments, including the portion for at-reactor spent fuel storage, would continue, although the amount of tax payments would likely be reduced after reactor operations cease. Nevertheless, the amount of tax payments related to continued storage is not expected to change during the short-term timeframe.

The socioeconomic effects of reactor operations have become well established as regional socioeconomic conditions have adjusted to the presence of the nuclear power plant. During the period of reactor operations local communities have adjusted to fluctuations in workforce caused by regularly scheduled refueling and maintenance outages (NRC 2013a). By comparison, the contributory effect on socioeconomic conditions from continued short-term spent fuel storage would be SMALL, because (1) the number of storage operations workers required to maintain and monitor spent fuel storage in pools or an at-reactor ISFSI is very small, (2) tax payments would continue, and (3) there would be no increased demand for housing and public services. Any reduction in State and local taxes paid by the licensee would be directly attributable to the cessation of reactor operations and the reduced value of the property rather than to continued storage. Therefore, the socioeconomic impacts of continued onsite storage during the short-term timeframe would be SMALL.

4.2.2 Long-Term Storage

As discussed in Section 2.1.4, in contrast to short-term storage, long-term storage of spent fuel would require the construction and operation of a DTS and replacement of the DTS and ISFSI.

[1] Typically shutdown units that are co-located with operating units either have a small dedicated staff or have workers from the operating units assigned and dedicated to the shutdown unit (e.g., spent fuel pool maintenance and monitoring activities).

The construction of a DTS and replacement at-reactor ISFSI would require a much smaller workforce than required for nuclear power plant construction or extended maintenance and refueling outages. As discussed in Section 3.2 of this GEIS, the construction workforce for an at-reactor ISFSI ranged from approximately 20 to 60 workers over approximately 1 year. The reference DTS is a two-level concrete and steel structure with an attached single-level, weather-resistant, pre-engineered steel building on 0.04 ha (0.1 ac). With regard to the workforce required for the construction of the DTS, the NRC reviewed a proposal to construct and operate a 3.2-ha (8-ac) spent fuel-transfer facility at the Idaho National Laboratory (NRC 2004a). The proposal estimated 250 construction workers would be employed for 2 years. Given that the Idaho National Laboratory facility is an estimated 80 times larger than the Transnuclear, Inc.-Electric Power Research Institute (Transnuclear-EPRI) DTS design, the NRC estimates that no more than 60 to 80 short-term construction workers would be needed for between 1 to 2 years to build the DTS and at-reactor ISFSI pad. The construction workforce would likely be composed of local workers. Given the small number of workers, short construction timeframe, and the availability of housing, there would likely be no noticeable increase in the demand for permanent housing.

Similar to short-term storage, a small number of workers (30–35) would continue to maintain and monitor the storage of spent fuel in the at-reactor ISFSI. The ISFSI workforce requirements would remain unchanged from the period of reactor operations. Therefore, continued storage would not create any increased demand for housing or public services. In addition, activities associated with long-term storage are also not likely to affect local transportation conditions in the vicinity of the continued storage site.

Similar to short-term timeframe, tax payments during the long-term timeframe would depend on a number of factors, including State tax law and established tax payment agreements with local tax authorities. Property tax and other payments, including the portion for continued at-reactor storage, would continue during the long-term timeframe. The replacement of the at-reactor ISFSI and construction, operation, and subsequent replacement of the DTS could be viewed as property improvements by local tax assessors causing the amount of the property tax payment to be increased. However, construction activities are expected to have a minor effect on the local economy. Nevertheless, even with the addition of a DTS, the amount of tax payments related to continued storage is not expected to significantly change during the long-term timeframe.

As previously noted for short-term storage, regional socioeconomic conditions have become well established during the period of reactor operations for all nuclear power plants (NRC 2013a). By comparison, the contributory effect from long-term storage would be SMALL for all socioeconomic categories because (1) few workers will be required to maintain and monitor spent fuel storage, construct and operate a DTS, and replace the at-reactor ISFSI and DTS; (2) construction activities will be of short duration; (3) continued tax payments will remain relatively unchanged; and (4) there will be no increased demand for housing and public

services. Therefore, the NRC concludes that the socioeconomic impacts of continued storage during the long-term timeframe would be SMALL.

4.2.3 Indefinite Storage

This section describes the socioeconomic impacts if a repository is not available to accept spent fuel from an existing nuclear power plant site. With no repository available, an at-reactor ISFSI would be continuously monitored and maintained. Impacts from indefinite storage would be similar to those described for long-term storage. The NRC assumes the ISFSI pads and DTS would be replaced every 100 years and that this would require a small workforce. Property tax revenue would remain relatively unchanged while spent fuel remains stored onsite. Therefore, the socioeconomic impacts of continued indefinite onsite storage would be SMALL.

4.3 Environmental Justice

This section describes the potential human health and environmental effects from the continued onsite storage of spent fuel in spent fuel pools and at-reactor ISFSIs on minority and low-income populations living in the vicinity of nuclear power plant sites.

The NRC strives to identify and consider environmental justice issues in agency licensing and regulatory actions primarily by fulfilling its NEPA responsibilities for these actions. Under Executive Order 12898 (59 FR 7629), Federal agencies are responsible for identifying and addressing potential disproportionately high and adverse human health and environmental impacts on minority and low-income populations. Environmental justice refers to a Federal policy that ensures that minority, low-income, and tribal communities that have historically been excluded from environmental decision-making are given equal opportunities to participate in decision-making processes.

In 2004, the Commission issued a Policy Statement on the Treatment of Environmental Justice Matters in NRC Regulatory and Licensing Actions (69 FR 52040), which states, “The Commission is committed to the general goals set forth in Executive Order 12898, and strives to meet those goals as part of its National Environmental Policy Act (NEPA) review process.” In addition, the Commission stated in its decision on the Private Fuel Storage (PFS) facility application that environmental justice, as applied at the NRC, “means that the agency will make an effort under NEPA to become aware of the demographic and economic circumstances of local communities where nuclear facilities are to be sited, and take care to mitigate or avoid special impacts attributable to the special character of the community” (NRC 2002a, 2004b).

The NRC normally addresses environmental justice issues and concerns by first identifying potentially affected minority and low-income populations and then determining whether there would be any potential human health or environmental effects and whether these effects may be disproportionately high and adverse in site-specific licensing actions. Adverse health effects are

measured in terms of the risk and rate of fatal or nonfatal adverse impacts on human health. Disproportionately high and adverse human health effects occur when the risk or rate of exposure to an environmental hazard for a minority or low-income population is significant and exceeds the risk or exposure rate for the general population or for another appropriate comparison group. Disproportionately high environmental effects refer to impacts or risks of impacts on the natural or physical environment in a minority or low-income community that are significant and appreciably exceed the environmental impact on the larger community.

Potential impacts on minority and low-income populations as the nuclear power plant transitions from reactor operations to decommissioning and continued storage would mostly consist of radiological (human health) and socioeconomic (environmental) effects. During continued storage, the incremental radiation dose from spent fuel stored in spent fuel pools and at-reactor ISFSIs is expected to remain unchanged from the period of reactor operations and within regulatory limits (see Section 4.17). Radiological and environmental monitoring programs, similar to those implemented during nuclear power plant operations, would ensure that the radiation dose from continued spent fuel storage would remain within regulatory limits. In addition, socioeconomic conditions affected by the continued storage of spent fuel as they relate to minority and low-income populations living near nuclear power plant sites would remain unchanged. Because spent nuclear fuel is already being stored in spent fuel pools and ISFSIs (where available) at all commercial nuclear power plants in the United States, the continued storage of spent fuel would not create any new effect on minority and low-income populations beyond what is currently being experienced during reactor operations.

As discussed in Section 3.3, the special pathway receptors analysis is an important part of the environmental justice analysis because consumption patterns may reflect the traditional or cultural practices of minority and low-income populations in the area of the continued storage site, such as migrant workers or Native Americans. All NRC licensees have to assess the impact of facility operations on the environment through their radiological environmental monitoring programs (REMPs). These programs assess the effects of site operations on the environment that could affect special pathway receptors. However, once reactor operations cease, the REMP would be modified to consider only the potential sources of radiation and radioactivity that may be released from a spent fuel pool or an at-reactor ISFSI. Air monitoring, thermoluminescent dosimeters, and groundwater monitoring would likely be used to detect releases from the spent fuel pools and at-reactor ISFSI, but collection of other environmental sampling data would depend on site-specific conditions (e.g., proximity to surface waterbody).

In most cases, NRC environmental justice analyses are limited to evaluating the human health effects of the proposed licensing action and the potential for minority and low-income populations to be affected. As explained in the Commission's policy statement, environmental justice-related issues as well as demographic conditions (i.e., the presence of potentially affected minority and low-income populations) differ from site to site, and environmental justice issues and concerns usually cannot be resolved generically with regard to NRC licensing

actions. Consequently, environmental justice, as well as other socioeconomic issues, is normally considered in site-specific environmental reviews (69 FR 52040). However, the NRC has determined that a generic analysis of the human health and environmental effects of continued storage on minority and low-income populations is possible, because minority and low-income populations are not expected to experience disproportionately high and adverse human health and environmental effects from the continued storage of spent fuel.

As previously stated in Chapters 2 and 3, this GEIS and the Rule are not licensing actions and do not authorize the continued storage of spent fuel. The environmental analysis in this GEIS fulfills a small part of the NRC's NEPA obligation with respect to the licensing or relicensing of a nuclear reactor or spent fuel storage facility. Further, for site-specific licenses, the NEPA analysis would include consideration of environmental justice prior to any NRC licensing action. As with other resource areas, a site-specific analysis allows the NRC to make an impact determination for each NRC licensing action. A generic determination of the human health and environmental effects during continued storage is possible because the NRC has evaluated how environmental effects change when a nuclear power plant site transitions from reactor operations to decommissioning. Based on this knowledge, the NRC can provide a generic assessment of the potential human health and environmental effects during continued storage.

4.3.1 Short-Term Storage

As previously explained in Section 4.2.1, the socioeconomic effects of reactor operations have become well established because regional socioeconomic conditions will have adjusted to the presence of the nuclear power plant (NRC 2013a). After the cessation of reactor operations, a small number of workers (20–85) would continue to maintain and monitor spent fuel pools. These workers would also transfer spent fuel from the spent fuel pools to an at-reactor ISFSI. Once all of the spent fuel is transferred from the spent fuel pools to dry cask storage, spent fuel pool storage operations worker positions would be eliminated. For at-reactor ISFSIs, a small number of workers (30–35) would be needed to maintain and monitor the ISFSI. Consequently, socioeconomic impacts due to continued storage would be unchanged in comparison to the period of reactor operations for minority and low-income populations.

Generally, the continued maintenance and radiological monitoring associated with spent fuel storage, either in spent fuel pools or at-reactor ISFSIs, during the short-term timeframe ensures that any human health and environmental effects would remain within regulatory limits for the general population. Based on a review of recent REMP reports, human health impacts would not be expected in special pathway receptor populations living near a nuclear power plant site as a result of subsistence consumption of water, local food, fish, and wildlife during the short-term timeframe. A modified REMP would remain in effect after the nuclear power plant ceases operations through the short-term timeframe. Monitoring would confirm that radiological doses would remain within regulatory limits and minority and low-income populations would

experience no new human health and environmental effects during the short timeframe beyond what had already been experienced during reactor operations.

As discussed for the other resource areas in Chapter 4, overall human health and environmental effects from continued storage during the short-term timeframe would be limited in scope and SMALL for all populations. Therefore, minority and low-income populations are not expected to experience disproportionately high and adverse human health and environmental effects during this timeframe. In addition, as indicated in the Commission's policy statement, environmental justice impacts would also be considered during site-specific environmental reviews for specific licensing actions (69 FR 52040).

4.3.2 Long-Term Storage

In addition to monitoring and maintenance, long-term storage includes the construction and operation of a DTS and replacement of the at-reactor ISFSI and DTS. Construction and operation of a DTS would constitute a Federal action under NEPA and site-specific analysis would include an analysis of the potential effects on minority and low-income populations. NRC environmental justice analyses are generally limited to evaluating the human health and environmental effects of the proposed licensing action and the potential for minority and low-income populations to be disproportionately affected. As stated in the NRC policy statement, environmental justice assessments would be performed as necessary in the underlying licensing action for each particular facility (69 FR 52040). DTS license reviews would not rely on the analysis in this GEIS, because the site-specific NEPA analysis would consider the site-specific impacts on minority and low-income populations.

Potential impacts on minority and low-income populations from the construction, operation, and replacement of the DTS and at-reactor ISFSI would mostly consist of environmental and socioeconomic effects during construction (e.g., noise, dust, traffic, employment, and housing impacts). Noise and dust impacts during construction would be short term and primarily limited to onsite activities. Minority and low-income populations residing along site access roads could be directly affected by increased commuter vehicle and truck traffic. However, because of the temporary nature of construction and the relatively low numbers of workers (60–80 short-term construction workers), these effects are likely to be minimal and limited in duration. Increased demand for rental housing during construction could cause rental costs to rise temporarily, disproportionately affecting low-income populations living near the site who rely on inexpensive housing. However, given the short duration of construction (1–2 years), the relatively small number of workers needed, and the proximity of some nuclear power plant sites to metropolitan areas, it is expected that many of the workers would commute to the construction site, thereby reducing the need for rental housing. Based on this information and the analysis of human health and environmental impacts presented in this chapter, the construction of the DTS and replacement of the ISFSI would not have disproportionately high and adverse human health and environmental effects on minority and low-income populations. Similar to the short-term

storage, a small number of workers (30–35) would be needed to maintain and monitor the at-reactor ISFSI after cask transfers to the replacement facility. Consequently, employment opportunities, although reduced from reactor operations, would remain unaffected for minority and low-income populations. Based on this information, there would be no disproportionately high and adverse human health and environmental effects on minority and low-income populations from the construction and operation of the DTS and replacement of the DTS and at-reactor ISFSI.

For long-term spent fuel storage, REMPs, similar to those implemented during nuclear power plant operations and short-term storage, would ensure that the radiation dose from DTS operations and continued spent fuel storage would remain within regulatory limits. Similar to short-term storage, a modified REMP would be in place to confirm that radiological doses remain within regulatory limits and minority and low-income populations would experience no new human health and environmental effects during the long-term timeframe beyond those experienced during reactor operations.

The continued maintenance and monitoring of spent fuel in at-reactor ISFSIs would have minimal human health and environmental effects on minority and low-income populations near these storage facilities. As discussed for the other resource areas in Chapter 4, overall human health and environmental effects from continued storage during the long-term timeframe would be limited in scope and SMALL for all populations, except for historic and cultural resources where impacts could be SMALL to LARGE. Long-term storage impacts on historic and cultural resources are discussed in Section 4.12. The magnitude of adverse effects on historic properties and the impacts on historic and cultural resources during the long-term timeframe largely depend on where the facilities are sited, what resources are present, the extent of proposed land disturbance, if the area has been previously surveyed to identify historic and cultural resources, and if the licensee has management plans and procedures that are protective of historic and cultural resources. Before ground-disturbing activities occur, the site-specific environmental review and compliance with the NHPA process could identify historic properties and historic and cultural resources that could be impacted. Thus, the potential impacts on historic and cultural resources could be SMALL to LARGE. However, measures such as implementation of historic and cultural management resource plans and procedures, agreements, and license conditions can be used to avoid, minimize, or mitigate adverse effects on historic properties and impacts on historic and cultural resources. Based on this information, minority and low-income populations are not expected to experience disproportionately high and adverse human health and environmental effects from the continued long-term storage of spent fuel. In addition, as indicated in the Commission's policy statement (69 FR 52040), environmental justice impacts would also be considered during site-specific environmental reviews for specific licensing actions.

4.3.3 Indefinite Storage

This section describes the environmental impacts on minority and low-income populations if a repository is not available to accept spent fuel. With no repository available, an at-reactor ISFSI would be continuously monitored and maintained. Impacts from indefinite onsite storage would be similar to those described in Section 4.3.2.

The continued maintenance and monitoring of spent fuel would have minimal human health and environmental effects on minority and low-income populations living near at-reactor ISFSIs. As discussed for the other resource areas in Chapter 4, overall human health and environmental effects from continued storage during the indefinite timeframe would be limited in scope and SMALL for all populations, except for nonradioactive waste generation and disposal and historic and cultural resources where impacts could be SMALL to MODERATE or SMALL to LARGE, respectively. The magnitude of adverse effects on historic properties and impacts on historic and cultural resources during the long-term timeframe largely depend on where the facilities are sited, what resources are present, the extent of proposed land disturbance, if the area has been previously surveyed to identify historic and cultural resources, and if the licensee has management plans and procedures that are protective of historic and cultural resources. Before ground-disturbing activities occur, the site-specific environmental review and compliance with the NHPA process could identify historic properties and historic and cultural resources that could be impacted. Regardless, minority and low-income populations are not expected to experience disproportionately high and adverse human health and environmental effects from the indefinite storage of spent fuel. In addition, as indicated in the Commission's policy statement (69 FR 52040), environmental justice impacts would also be considered during site-specific environmental reviews for specific licensing actions.

4.4 Air Quality

This section describes impacts on air quality caused by continued storage in spent fuel pools and at-reactor ISFSIs. Because there would be no increase in emissions during continued storage, the requirements for a conformity determination under 40 CFR Part 93 do not apply to the operation of a spent fuel pool or an at-reactor ISFSI. The requirements for a conformity determination with respect to the replacement of an ISFSI and the construction, operation, and replacement of a DTS are considered in the long-term storage section (see Section 4.4.2).

4.4.1 Short-Term Storage

Once reactor operations cease and continued storage begins, most pollutant-generating activities at the nuclear power plant site would either cease or continue at lower levels. Therefore, as described below, the environmental impacts on air quality during continued storage would be less than the impacts during reactor operations.

The License Renewal GEIS concluded that impacts for continued power-generation operations in attainment, nonattainment, and maintenance areas are SMALL for all plants, at least in part because licensees would be required to operate within State permit requirements (NRC 2013a). Specifically, the License Renewal GEIS analyzes a number of specific activities related to continued power-generation operations that result in emissions of air pollutants. These include testing of emergency diesel generators, use of fossil-fuel boilers (for evaporator heating, plant space heating, and feed water purification), testing of fossil-fuel-fired fire pumps, cooling-tower drift, and transmission-line emissions. When the nuclear power plant ceases operations and the site enters the short-term storage timeframe, many of these activities will also cease. For example, testing requirements may be reduced or eliminated for emergency diesel generators, which are no longer needed to maintain and restore reactor core or spent fuel pool cooling once the reactor is permanently shutdown. Also, cooling towers would no longer be rejecting up to two-thirds of the thermal power of a reactor, which would dramatically reduce cooling-tower drift. Because emissions of air pollutants resulting from continued storage of spent fuel in either spent fuel pools or at-reactor ISFSIs would be substantially smaller than air emissions during power generation, air quality impacts from continued storage would also be minor.

Routine maintenance and monitoring activities at the at-reactor ISFSI would occur during short-term storage. Because dry cask storage systems do not have active systems (e.g., diesel generators), these activities would not involve significant releases of air pollutants.

Thermal releases from the at-reactor ISFSI can cause localized atmospheric heating. Downwind from an at-reactor ISFSI storing 1,600 MTU, it is estimated that ambient temperature changes would not be noticeable (i.e., the temperature would increase no more than 0.05°C [0.09°F]) at 1 km (0.6 mi) from the site (NRC 1984). Temperature changes this small could not be differentiated from temperature changes that naturally occur, such as from passage of the sun throughout the day and passing clouds. Over time, the spent fuel in the casks will cool and less heat will be released resulting in less local atmospheric heating. The heat released by storing dry casks on the surface should be distinguished from the greenhouse gas emissions discussed in Section 4.5 of this GEIS. Heat released from a dry cask is a local phenomenon, whereas greenhouse gases released into the atmosphere potentially contribute to impacts beyond the local environment.

Because emissions of air pollutants resulting from short-term continued storage of spent fuel would be substantially smaller than air emissions during power generation, which was determined to have SMALL impacts in the License Renewal GEIS, the NRC concludes the impacts associated with continued spent fuel storage would be SMALL for all location classifications (i.e., attainment, nonattainment, and maintenance). Further, the impact from heat released to the atmosphere from ISFSIs would be SMALL because the small variations in downwind temperatures caused by heat released from the ISFSI could not be differentiated from natural temperature fluctuations.

4.4.2 Long-Term Storage

As noted in Section 1.8, all the spent fuel would be moved out of the spent fuel pool and into at-reactor dry cask storage by the beginning of this timeframe. Routine maintenance and monitoring activities at the at-reactor ISFSI would continue during long-term storage. Because dry cask storage systems do not have active systems (e.g., diesel generators), these activities would not involve significant releases of air pollutants. As described in Section 1.8.3, the NRC assumes that the ISFSI needs to be replaced and the fuel repackaged during this timeframe. To facilitate the transfer of the spent fuel to new casks, the NRC also assumes that a DTS is constructed and replaced once during the long-term storage timeframe.

The construction and replacement of a DTS would involve onsite fabrication involving heavy equipment (earthmoving, concrete batch plant, cranes, etc.), which would cause emissions of air pollutants. Given the relatively smaller size of the DTS compared to an at-reactor ISFSI, the time, materials, and equipment required to build the DTS would be no more than those used to construct an ISFSI. The NRC previously determined that the environmental impact on air quality from construction of the Diablo Canyon ISFSI, which would hold up to 140 dry storage casks from two reactors on a 2-ha (5-ac) site and would be larger than the reference DTS, would be minimal (NRC 2003). Therefore, the air emissions and impacts on air quality for construction and replacement of the DTS would also be minimal. The DTS relies on electrical power for operations. As a result, there are no routine emissions of air pollutants from the DTS during operations, such as might occur from a boiler or diesel generator. A diesel generator could be used as a source of backup electrical power. Testing and use of a backup diesel generator would be infrequent and would cause emissions no greater than those caused by emergency diesel generators at operating nuclear power plants, which are minor.

Activities associated with ISFSI replacement and DTS operations, including cask repair, bare fuel handling as part of repackaging operations, and cask replacement, are expected to be of relatively short duration and limited extent in any year during long-term continued storage. These activities are likely to involve only a portion of the ISFSI, and in any year would likely involve only a fraction of the air emissions that were associated with initial construction of the at-reactor ISFSI. As a result, there may be temporary increases in levels of suspended particulate matter from construction and replacement activities. In addition, exhaust from vehicles would add to levels of hydrocarbons, carbon monoxide, and nitrogen oxides. However, these emissions of air pollutants are not expected to noticeably affect important attributes of air quality in the region.

Previous NRC NEPA analyses for site-specific licensing actions support this conclusion for attainment, maintenance, and nonattainment areas. For example, the NRC analyzed the impacts of constructing and operating an ISFSI at Humboldt Bay (NRC 2005a), which is located in an attainment area, and determined that the air quality impacts were SMALL. The NRC also analyzed the impacts of constructing and operating additional reactor units at existing nuclear

power plant sites such as Calvert Cliffs Unit 3 (NRC 2011a) and Fermi Unit 3 (NRC 2013b), which are located in nonattainment areas. In both examples, the NRC determined that the air impacts were SMALL, at least in part because licensees would be required to operate within State permit requirements. The level of activities and associated air emissions from long-term storage would not be greater than those for the construction and operation of another reactor unit at an existing power plant site.

Emissions of air pollutants during ISFSI replacement and construction, operation, and replacement of a DTS would be well below *de minimis* levels in 40 CFR Part 93 and the requirements for a conformity determination would not apply. *De minimis* emission levels in 40 CFR Part 93 are provided for each criteria pollutant and for different levels of nonattainment, but not all of these limits are relevant to at-reactor continued storage. No operating nuclear power plants are currently located in extreme, severe, or serious ozone nonattainment areas; in serious PM_{10} nonattainment areas; or in lead nonattainment areas. Therefore, the applicable *de minimis* annual emission rate for all operating nuclear power plants in nonattainment and maintenance areas is 100 T/yr for all criteria pollutants, except volatile organic compounds for plants within an ozone transport region, for which the *de minimis* level is 50 T/yr (NRC 2013a). The NRC estimated the peak annual emissions for preconstruction and construction of the entire Fermi Unit 3 nuclear power plant to be 123.2 T/yr nitrogen oxide and 53.4 T/yr volatile organic compounds (NRC 2013b), which is only slightly above *de minimis* levels. Because the DTS and ISFSI are only a small fraction of the size of an entire nuclear power plant, the emissions of air pollutants during ISFSI replacement and DTS construction and replacement would be well below *de minimis* levels.

Thermal releases from storing dry casks on the surface would cause some local atmospheric heating. As described previously for short-term storage, this effect is not expected to be noticeable and would decrease during the long-term storage timeframe as decay heat in the ISFSI decreases over time.

Emissions of air pollutants during long-term continued storage of spent fuel would be minimal, and the NRC concludes the impacts would be SMALL for all location classifications (i.e., attainment, nonattainment, and maintenance). The impact from heat released to the atmosphere from ISFSIs would be SMALL because the small variations in downwind temperatures would not be noticeable and would decrease throughout this period as decay heat diminishes.

4.4.3 Indefinite Storage

This section describes the environmental impacts on air quality if a repository never becomes available to accept spent fuel. Indefinite storage would consist of the same activities and result in the same impacts as those for long-term storage (Section 4.4.2), except that they would continue indefinitely into the future. Thermal releases from storing dry casks on the surface would cause some local atmospheric heating, which would continue to decrease as decay heat

from spent fuel diminishes. Therefore, the NRC concludes that the environmental impacts on air quality from indefinite storage due to air emissions and thermal releases would each be SMALL.

4.5 Climate Change

In this section, the NRC evaluates the effect of continued storage on climate change. The NRC's evaluation of the effects of climate change on the intensity and frequency of natural phenomena hazards that may cause spent fuel storage accidents is provided in Section 4.18.

4.5.1 Short-Term Storage

This section describes greenhouse gas emissions related to short-term continued storage of spent fuel. The activities at a nuclear power plant during short-term continued storage involve the emission of greenhouse gases, primarily carbon dioxide (CO_2). The quantities of greenhouse gas emissions are often described in terms of a CO_2 footprint expressed as metric tons of CO_2 equivalent. The NRC's previous estimates of a reference reactor's CO_2 footprint during the decommissioning period include activities in addition to those related to continued storage of spent fuel. However, these estimates provide a reasonable upper bound on the CO_2 footprint for short-term continued storage because the activities that occur as a direct result of continued storage would generate less CO_2 than decommissioning activities.

The NRC estimated the CO_2 footprint for a reference 1,000-MW(e) reactor for a 50-year decommissioning period, assuming the licensee chooses the SAFSTOR decommissioning option (NRC 2013c). The greenhouse gas emissions resulting from the SAFSTOR decommissioning option would include all emissions of greenhouse gases that would be associated with the immediate decommissioning (or DECON) option, and also include the greenhouse gases that would be emitted by vehicles used by the caretaker workforce for the intervening 40-year period of SAFSTOR.[2] Therefore, greenhouse gas emissions associated with the SAFSTOR option bound those associated with the DECON option. The NRC assumed that SAFSTOR lasts for 40 years and is followed by 10 years of major decommissioning activities. The predominant sources of greenhouse gas emissions during major decommissioning activities are fossil-fuel powered demolition equipment and worker transportation vehicles for the estimated 200 decommissioning workers (NRC 2013c). Continued storage activities at the spent fuel pool and at-reactor ISFSI do not involve significant sources of fossil-fuel consuming activities, other than the use of vehicles by the commuting

[2] In the third option, the ENTOMB option, radioactive systems, structures, and components are encased in a structurally long-lived substance, such as concrete. The entombed structure is appropriately maintained, and continued surveillance is carried out until the radioactivity decays to a level that permits termination of the license. No licensee has ever chosen the ENTOMB option, and it is not considered further in this GEIS.

workforce, and the occasional use of onsite vehicles for inspection and maintenance of spent fuel storage facilities. Therefore, greenhouse gas emissions from decommissioning activities would be more than the greenhouse gas emissions associated with the smaller workforce responsible for continued storage. The CO_2 footprint of decommissioning is on the order of 37,000 MT of CO_2 equivalent (NRC 2013c), or an annual emission rate of about 740 MT, averaged over the period of decommissioning, compared to a total U.S. annual CO_2 emissions rate of 6.7 billion MT of CO_2 equivalent in 2011 (EPA 2013).

Based on its assessment of the relatively small short-term continued storage greenhouse gas footprint compared to the U.S. annual CO_2 emissions, the NRC concludes that the atmospheric impacts of greenhouse gases from short-term continued storage would not be noticeable and would therefore be SMALL.

4.5.2 Long-Term Storage

This section describes the greenhouse gas production of continued storage during long-term continued storage. Over the long-term storage timeframe, sources of greenhouse gas emissions include vehicles used by the commuting workforce and workers conducting routine maintenance activities for the at-reactor ISFSI and construction and demolition equipment required to initially construct, and eventually replace, a DTS and to replace the at-reactor ISFSI. Given that activities at the site have been reduced to continued storage of spent fuel at the at-reactor ISFSI, the CO_2 footprint for the commuting workforce would be no greater than that associated with the SAFSTOR workforce described previously. Using the greenhouse gas emission rate of 10,000 MT of CO_2 equivalent over 40 years associated with the SAFSTOR option, this is approximately 25,000 MT of CO_2 equivalent over the 100-year long-term storage timeframe (NRC 2013c).

The NRC's estimated CO_2 footprint for a reference 1,000-MW(e) reactor provides a useful upper bound for the CO_2 footprint that would be associated with construction and replacement of the ISFSI and DTS, which are much smaller facilities. The CO_2 footprint for construction equipment used to build a 1,000-MW(e) reactor is about 39,000 MT of CO_2 equivalent. The CO_2 footprint for decommissioning equipment used on a 1,000-MW(e) reactor is about 19,000 MT of CO_2 equivalent (NRC 2013c).

Combining the total CO_2 footprints for the commuting workforce, construction and replacement activities, and averaging over the 100-year long-term storage timeframe, the annual CO_2 footprint is estimated to be no more than 830 MT of CO_2 equivalent, compared to a total U.S. annual CO_2 emissions rate of 6.7 billion MT of CO_2 equivalent in 2011 (EPA 2013). Based on its assessment of the relatively small long-term continued storage greenhouse gas footprint compared to the U.S. annual CO_2 emissions, the NRC concludes that the atmospheric impacts of greenhouse gases from long-term continued storage would not be noticeable and would therefore be SMALL.

4.5.3 Indefinite Storage

This section describes the greenhouse gas production of continued storage if a repository never becomes available to accept spent fuel. The main difference when compared to the impacts during long-term storage is that without a repository these activities would occur on an ongoing basis over a longer period of time so the total amount of emissions would be greater. However, the annual emission levels for the various phases would remain the same.

The NRC concludes that the relative contribution from indefinite onsite storage of spent fuel to greenhouse gas emission levels would be SMALL based on the same considerations as those cited previously in the long-term storage section.

4.6 Geology and Soils

This section describes the potential environmental impacts on geology and soils caused by the continued onsite storage of spent fuel.

4.6.1 Short-Term Storage

Continued spent fuel pool operation is not anticipated to increase impacts on the local geology and soils. However, spent fuel pool leaks could result in radiological contamination of offsite soils. The degree of contamination of offsite soils would depend on the rate of release from the spent fuel pool, the direction of groundwater flow, the distance to offsite locations, and the velocity or transport rates of radionuclides through soils and radioactive decay rates. Contamination in groundwater is likely to be observed as part of a licensee's REMP prior to the contamination plume reaching the offsite environment, and corrective action would be taken consistent with Federal and State requirements. In addition, most radionuclides are likely to be absorbed by the concrete structures of the spent fuel building and by the soil surrounding the leak location. As a result, the NRC expects that most soil contamination from spent fuel pool leaks would remain onsite and, therefore, offsite soil contamination is unlikely to occur. Therefore, the NRC concludes that the environmental impact of spent fuel pool leaks to offsite soils (i.e., outside the power plant's exclusion area) would be SMALL. Appendix E contains additional information regarding the analysis of the impacts of spent fuel pool leaks on soils.

Continued ISFSI operation is not expected to affect the underlying geology because ISFSIs have no moving parts to affect the subsurface (see e.g., NRC 2012a). Although soils may be affected by spills and leaks of radiological and hazardous materials, ISFSIs are designed to prevent leakage and licensee employees conduct routine inspections to verify that the ISFSIs are performing as expected. Leaks could result in spills of oil and hazardous material from operating equipment and stormwater runoff carrying grease. However, these activities are monitored and, in the case of stormwater runoff, regulated under National Pollutant Discharge Elimination System (NPDES) permit requirements (NRC 2002b).

Because no new land would be disturbed for the continued operation and maintenance of the existing pool and ISFSI and the impacts from spent fuel leaks to offsite soils would be SMALL, the NRC concludes that the continued storage of spent fuel during short-term storage on geology and soils would be SMALL.

4.6.2 Long-Term Storage

During the long-term storage timeframe, routine maintenance and monitoring of the ISFSI would continue. Similar to short-term storage, the operation of any ISFSI is not anticipated to have any additional impacts on soils beyond those associated with construction.

The construction of a DTS is anticipated to have minimal impacts on soils due to the small size of the DTS, which is about 0.7 ha (2 ac). The types of impacts on soils from construction of a DTS would be similar to those anticipated for any power plant facility construction and would include soil compaction, soil erosion, and potential surface leaks of oils, greases, and other construction materials. Due to the relatively small size of the DTS, the impacts would be limited to the immediate area. Any laydown areas associated with construction would be reclaimed once the construction phase is complete. The GEIS also assumes that the ISFSI and DTS would require replacement and would occur on land near existing facilities. There would be no permanent increase in the overall area of land disturbed because the old facilities would be demolished and the land could be reclaimed.

The construction and operation of the DTS, along with the replacement of the DTS and ISFSI facilities, would have minimal impacts on soils on the small fraction of the land committed for the facilities. There are no anticipated impacts on the geology of the area as the result of these activities. Therefore, the NRC concludes that the environmental impact on geology and soils would be SMALL during long-term storage.

4.6.3 Indefinite Storage

In this section, impacts are evaluated assuming a repository does not become available. As previously noted, the ISFSI would require continued maintenance and monitoring. In addition, the ISFSI, storage casks, and DTS are assumed to be replaced every 100 years using a staged approach. As described above, no additional land would be required for these activities. At the end of the next 100-year cycle it is anticipated that the replacement of the ISFSI and DTS would occur on previously disturbed land, thereby minimizing impacts on soils. Given the temporary nature of the impacts on geology and soils, and the occurrence of the impacts within previously disturbed areas, the NRC concludes that the environmental impacts on geology and soils from the indefinite onsite storage of spent fuel would be SMALL.

4.7 Surface-Water Quality and Use

This section describes potential environmental impacts on the quality and consumptive use of surface water caused by continued storage of spent fuel in spent fuel pools and ISFSIs.

4.7.1 Short-Term Storage

During the short-term timeframe, most environmental impacts on surface-water resources will cease due to the end of reactor operations. For example, consumptive water loss per 1,000 MW(e) for different cooling systems used at operating power plants ranges from 30,700 L/min (8,100 gpm) for plants that use once-through cooling system to 53,000 L/min (14,000 gpm) at plants with mechanical draft cooling towers (NRC 2013a). After permanent cessation of operations, the amount of heat rejected by these cooling systems would drop from over 10,000 BTU/hr to approximately the initial 40-BTU/hr decay heat load associated with cooling a spent fuel pool shortly after fuel is discharged from a reactor (EPRI 2002). Other potential impacts on surface-water resources would result from use of water to shield workers from radiation in the reactor area, continued stormwater management, and minor chemical spills. With more than 99 percent reduction in the amount of heat to be discharged, and a corresponding reduction in cooling-water demand, potential impacts from these activities would be significantly less severe than those associated with normal plant operation. The same activities described above also may affect surface-water quality. Surface waters are most likely to be affected by stormwater runoff, erosion, and by discharge of hazardous substances. However, these activities are monitored and regulated under NPDES permit requirements (NRC 2002b).

4.7.1.1 Spent Fuel Pools

As described above, because cooling-water demand would be significantly reduced after reactor operations have ceased, the NRC has determined that impacts on surface-water consumptive use from the continued storage of spent fuel in spent fuel pools will not be detectable or be so minor that they would not noticeably alter the water supply.

Surface-water quality may be affected by groundwater contamination. The NRC has completed a review of its overall regulatory approach to groundwater protection (NRC 2011b). The NRC started this review in response to incidents of radioactive contamination of groundwater and soils at nuclear power plants. Contaminated groundwater at some sites may discharge to nearby surface waters, resulting in indirect effects on surface-water quality. The concentrations of radionuclides in offsite surface waters would depend on the rate of release from the spent fuel pool, direction and rate of groundwater flow, the distance to nearby offsite surface waters toward which groundwater flows, the velocity or transport rates of radionuclides through the subsurface, and radioactive decay rates. However, because surface waters in the vicinity of nuclear power plants are usually large to meet reactor cooling requirements, a large volume of

surface water is usually available to dilute groundwater contaminants that flow into the surface waterbody. This dilution results in contaminants that may have been present above applicable groundwater-quality standards being diluted well below limits considered safe.

The NRC, in Appendix E, estimated an annual discharge rate for leakage from the spent fuel pool of 380 L/d (100 gpd) with contaminants at certain concentrations assumed to be present at the start of short-term storage. These concentrations were compared to annual effluent ranges for BWRs and PWRs. Even in the unlikely event that spent fuel pool leakage flowed continuously (24 hours per day, 365 days per year) undetected to local surface waters, the quantities of radioactive material discharged to nearby surface waters would be comparable to values associated with permitted, treated effluent discharges from operating nuclear power plants (see Table E-2). Based on the above considerations, the NRC concludes that the impact of spent fuel pool leaks on surface water would be SMALL. More information about the NRC's analysis of the environmental surface-water-quality impacts of continued storage of spent fuel on nearby surface waters from groundwater contamination can be found in Appendix E of this GEIS.

4.7.1.2 ISFSIs

As passive, air-cooled storage systems, ISFSIs do not consume water and they generate minimal liquid effluents that may be discharged to surface waterbodies during normal operation. For example, in its consideration of water-use impacts for the renewal of the Calvert Cliffs ISFSI, the NRC determined that both direct and indirect impacts would be SMALL (NRC 2012a). This includes consideration of cask-loading operations and stormwater runoff carrying grease, oil, and spills from operating equipment that support the ISFSI.

4.7.1.3 Conclusion

Because short-term storage of spent fuel would use less surface water and have fewer activities that could affect surface-water quality than an operating reactor, which was previously determined to have a SMALL impact, and because leaks from spent fuel pools would have a SMALL impact on surface-water quality, the NRC concludes that impacts on surface-water quality and consumptive use during the short-term storage timeframe would each be SMALL.

4.7.2 Long-Term Storage

During long-term storage, there is no demand for surface water for routine maintenance and monitoring of an at-reactor ISFSI. In addition, as during short-term continued storage described above, water-quality impacts from ISFSI operations would be minimal. However, during long-term continued storage, there could be temporary consumptive use of surface water for demolishing and replacing the ISFSI and constructing and eventually replacing a DTS.

During ISFSI demolition, a small amount of water could be sprayed from water trucks to minimize dust clouds. Additional water may be required to make concrete to replace facilities. For example, it would require about 380,000 L (100,000 gal) of water to make the concrete to replace an entire 46 × 46 m (150 ×150 ft) ISFSI pad that is 1 m (3 ft) thick. A comparable amount could be required to replace dry cask storage system components, such as storage casks. If the activity were to take several months to complete, the average daily consumptive water use would be a few thousand gallons, which is less than the consumptive water loss estimated for an operating reactor for 1 minute (NRC 2013a). Therefore, the consumptive water-use impacts for demolishing and replacing the ISFSI would be minimal.

The NRC assumes that a DTS would need to be constructed and replaced during the long-term storage timeframe. The construction and operation of a DTS involves very little temporary consumptive use of water. While some water would be required for construction of the DTS concrete basemat and shell, it is expected that ready-mix concrete would be used and supplied by commercial vendors. Given the relatively small size of the DTS compared to an ISFSI, less water would be required to build the DTS than would be used to construct the ISFSI. During operations, water would be brought to the facility by tanker truck or temporary connection to public water supply for general purpose cleaning and canister decontamination. Additional water might be consumed by activities such as drinking, conducting personal hygiene, and disposing of sewage.

The NRC concludes that the potential consumptive use and surface-water quality impacts from continued ISFSI operations would be minimal. Consumptive use of surface water for ISFSI replacement and DTS construction, operation, and replacement would involve amounts of water that are a small fraction of water use during reactor operations. Therefore, the NRC concludes that the potential impacts on surface-water use and quality for the long-term storage timeframe would be SMALL.

4.7.3 Indefinite Storage

If no repository becomes available, storage of spent fuel would continue indefinitely. As a result, the potential impacts on surface-water resources would be similar to those described for long-term storage (see Section 4.7.2) because the same activities would recur. Every 100 years, surface water would be required for demolishing and replacing the ISFSI and DTS. This additional consumptive use would be temporary. Therefore, the NRC concludes that the potential impacts on surface-water use and quality for the indefinite storage of spent fuel would each be SMALL.

4.8 Groundwater Quality and Use

This section describes the potential environmental impacts on groundwater water quality and consumptive use caused by continued storage of spent fuel in spent fuel pools and at-reactor ISFSIs.

4.8.1 Short-Term Storage

During short-term storage, most groundwater consumptive-use and quality impacts that had been caused by reactor operations would cease. Groundwater withdrawals may continue at some reactor sites during short-term storage because groundwater may be pumped for potable water, sanitary uses, and maintenance of spent fuel pools. This usage would likely be at a much reduced rate compared to normal reactor operations at the site. At other sites, offsite public water sources or onsite groundwater could also be used. This shift in usage would likely coincide with the reduction and eventual elimination of surface-water withdrawals, when they are no longer needed to support reactor cooling. However, surface-water resources may be used for some activities at some sites. Dewatering systems (e.g., foundation sumps, underdrains, and wells) to control high water tables, seepage of water into the subgrade of structures, or for hydraulic containment of contaminants may also remain active during decommissioning.

The NRC determined in the License Renewal GEIS that consumptive use of groundwater during reactor operation would be SMALL because groundwater supplies are commonly not used or are used as a backup water source. During normal reactor operations, at most reactors, the withdrawal rate from production aquifers is kept below 380 L/min (100 gpm) to avoid groundwater-use conflicts (NRC 2013a). When reactor operations cease, the use of groundwater is greatly reduced, especially at sites where reactor operations use groundwater as a backup water source (e.g., H.B. Robinson Steam Electric Plant [NRC 2005b]), because cooling-water system demands are substantially lower after the facility is shut down and spent fuel is removed from the reactor vessel (NRC 2002b).

4.8.1.1 Spent Fuel Pools

Because consumptive water-use impacts on groundwater resources during short-term storage of spent fuel in spent fuel pools would be significantly less than during normal reactor operation, the resultant impacts on groundwater at offsite wells would be nondetectable or so minor that they would not noticeably alter groundwater resources. As a result, the NRC has made a generic conclusion that the consumptive water-use impacts on groundwater resources during short-term storage of spent fuel in spent fuel pools would be minor or minimal.

Continued short-term storage of spent fuel in spent fuel pools could result in radiological impacts on groundwater quality. As discussed in Appendix E, in the unlikely event that a leak

from a spent fuel pool goes undetected and the resulting groundwater plume reaches the offsite environment, it is possible that the leak could be of sufficient magnitude and duration to contaminate a groundwater source above a regulatory limit (e.g., a maximum contaminant level for one or more radionuclides). The NRC acknowledges that should offsite groundwater contamination occur, the radiological impacts on groundwater quality resulting from a spent fuel pool leak during the short-term timeframe could noticeably alter, but not destabilize a groundwater resource.

However, the impacts of a spent fuel pool leak on offsite groundwater receptors depend on many factors, including the volume and rate of water released from the spent fuel pool, the radionuclide content and concentration and water chemistry of the spent fuel pool water, the direction of groundwater flow, the distance to an offsite groundwater receptor, the velocity or transport rates of radionuclides through the subsurface, and radioactive decay rates. Further, as discussed in Appendix E, spent fuel pool design (e.g., stainless-steel liners and leakage-collection systems) and operational controls (e.g., monitoring and surveillance of spent fuel pool water levels) make it unlikely that a leak will remain undetected long enough to exceed any regulatory requirement (e.g., the NRC dose limit or U.S. Environmental Protection Agency [EPA]-mandated Maximum Contaminant Level) in the offsite environment. Although a small number of spent fuel pool leaks have caused radioactive liquid releases to the environment, based on the available data, none of these releases have affected the health of the public (NRC 2006a). In addition, licensees have implemented onsite groundwater monitoring programs that satisfy the requirements of 10 CFR 20.1501. Performing onsite groundwater monitoring throughout the short-term storage timeframe, in conjunction with other onsite and offsite radiological monitoring conducted as part of a licensee's REMP, will allow licensees to detect radiological contamination in the event of a spent fuel pool leak, and should facilitate detection of a leak in sufficient time to prevent the offsite migration of contamination at levels that could exceed regulatory requirements (e.g., the NRC dose limit or EPA-mandated Maximum Contaminant Level). In addition, a variety of physical processes associated with radionuclide transport (see Section E.2.1.2) and hydrologic characteristics associated with typical nuclear power plant settings (see Section E.2.1.3) would act to mitigate the impacts from the offsite migration of future spent fuel pool leakage. These physical processes and hydrologic characteristics include radionuclide adsorption, dilution, and decay; delayed transport times due to relatively flat hydraulic gradients in the shallow water tables, lengthy distance to local groundwater users, and the likelihood that local groundwater usage is in deeper confined aquifers, respectively. Further, current and future spent fuel pool sites are required to have routine REMPs in place that should take samples at offsite groundwater sources (e.g., potable or irrigation) in areas where the hydraulic gradient or recharge properties are suitable for contamination (NRC 1991a,b). Finally, any detection of onsite contamination would likely result in additional monitoring, including additional sampling of any nearby private wells, as part of an expanded environmental monitoring program. With these measures and characteristics in place, it is unlikely that offsite migration of spent fuel pool leaks will occur or go undetected.

Based on these factors, the NRC concludes that the radiological impacts on groundwater quality resulting from a spent fuel pool leak during the short-term timeframe would be SMALL.

The NRC is aware that unintentional releases of nonradiological hazardous substances have infrequently occurred after reactors shut down. Except for a few substances (e.g., diesel fuel), surface spills of hazardous substances that might lead to groundwater contamination are often localized, quickly detected, and relatively easy to remediate (NRC 2002b). During the short-term timeframe, the licensee will decommission the site, which will result in the ultimate cleanup of the portions of the reactor facility that are not needed for continued short-term storage in a spent fuel pool. In addition, permit requirements (e.g., NPDES permit) and the requirements for compliance with the Resource Conservation and Recovery Act (RCRA) and the Safe Drinking Water Act would minimize potential risks for nonradiological contamination entering groundwater during short-term spent fuel storage in spent fuel pools.

Therefore, the NRC concludes that during short-term storage, the nonradiological impacts on groundwater quality would be minimal.

4.8.1.2 ISFSIs

ISFSIs, which are passive systems, consume minimal water and generate minimal nonradiological liquid effluents during normal operation (see e.g., NRC 2012a). The only potential impact on groundwater quality from operating an ISFSI consists of the infiltration of stormwater runoff carrying grease and oil, and spills from operating equipment that supports the ISFSI. Because ISFSI storage requires minimal water and produces minimal, localized, and easy-to-remediate liquid effluents on or near the ground surface, ISFSI storage impacts on groundwater quality and use would not be detectable or would be so minor that they would not noticeably alter groundwater resources. As a result, the NRC concludes that the potential consumptive water-use and quality impacts on groundwater during ISFSI storage of nuclear fuels would be minimal.

4.8.1.3 Conclusion

Based on the discussion above, the NRC concludes that consumptive water-use impacts on groundwater resources during short-term storage of spent fuel in spent fuel pools and at-reactor ISFSIs would be SMALL. For groundwater quality, the NRC concludes that radiological and nonradiological impacts during the short-term storage of spent fuel in pools and ISFSIs would be SMALL.

4.8.2 Long-Term Storage

The consumptive water use associated with routine maintenance and monitoring of the ISFSI discussed for short-term storage would continue during long-term storage. In addition, the NRC

assumes that a DTS would need to be constructed and operated during long-term storage. The construction and operation of a DTS involves very little consumptive use of groundwater. Concrete used for construction of the basemat and shell would likely arrive ready mixed and would not require additional water. For example, the NRC previously identified that little or no water would be consumed by the construction of the Calvert Cliffs and Prairie Island ISFSIs (NRC 1991c, 1992). Because the size of the DTS would be small compared to an ISFSI, less water would be required to construct the DTS than would be used to construct the ISFSI. During DTS operations, water would be brought to the facility by tanker truck or temporary connection to public water supply for general purpose cleaning and canister decontamination. Additional water might be consumed by activities such as drinking, conducting personal hygiene, and disposing of sewage.

The impacts on groundwater quality from the operation of the ISFSI during long-term storage would be similar to the impacts discussed previously for short-term storage (Section 4.1.1). While operation of the DTS does consume water, no groundwater quality affecting discharges are expected. Therefore, the consumptive groundwater-use and quality impacts from construction of the DTS and operation of the ISFSI, including the DTS would be minimal during long-term storage.

With regard to ISFSI and DTS replacement activities, the consumptive-use and groundwater-quality impacts would be similar to those associated with initial construction of the ISFSI. For example, the NRC staff determined that construction of the Calvert Cliffs and Prairie Island ISFSIs (NRC 1991c, 1992) would have negligible to no impacts on water resources. Similarly, the groundwater-quality and consumptive-use impacts associated with ISFSI and DTS replacement activities during long-term storage would be minor.

Because the potential impacts on groundwater water quality and consumptive water uses during long-term storage would be similar to the impacts during short-term dry storage, the NRC concludes that the impacts on groundwater quality and consumptive use associated with the long-term storage of spent fuel in an at-reactor ISFSI would be SMALL.

4.8.3 Indefinite Storage

If no repository becomes available, storage of spent fuel in an ISFSI would continue indefinitely. As a result, the potential impacts on groundwater resources would be similar to those described for long-term storage (Section 4.8.2) because the same activities would be happening at the storage site. Every 100 years, groundwater may be required for demolishing and replacing the ISFSI and DTS. This additional consumptive use would be temporary. Therefore, the NRC concludes that the potential impacts on groundwater use and quality if a repository is not available would each be SMALL.

4.9 Terrestrial Resources

This section describes potential environmental impacts on terrestrial resources caused by the continued storage of spent fuel in spent fuel pools and at-reactor ISFSIs.

As explained in Section 3.8, a wide variety of terrestrial habitats are present at nuclear power plant sites, which include spent fuel pools and at-reactor ISFSIs. The generic environmental impact analyses in this section consider both existing generic analyses and site-specific analyses that the NRC completed for licensing and relicensing of nuclear power plants and ISFSIs. The significance of potential impacts on plants and animals and their habitats depends on the importance or role of the plant or animal within the ecological community that is affected.

4.9.1 Short-Term Storage

During the short-term storage timeframe, many activities that occurred during the operation of the reactor that could affect terrestrial resources would cease. However, terrestrial resources will likely continue to be affected during this timeframe by the continued operation of the spent fuel pool cooling system, and by the operation and maintenance of systems and structures at the nuclear power plant site and the at-reactor ISFSI.

4.9.1.1 Spent Fuel Pools

The following discussion describes the impacts of spent fuel pool operations during short-term storage, using the impact analyses from the License Renewal GEIS to inform the NRC's analysis of these impacts during short-term storage. Operation of a spent fuel pool and its associated cooling system during short-term storage would require the withdrawal of water and discharge of effluents into a nearby waterbody. The NRC evaluated the effects of the continued operation of nuclear power plants, which included the operation of associated spent fuel pools, on terrestrial resources in the License Renewal GEIS (NRC 2013a). The NRC then looked at the systems that would be needed to cool the spent fuel pool during short-term storage, and compared the impacts associated with water use during operations and water use after the end of operations.

Water-Use Conflicts with Terrestrial Resources at Plants with Cooling Ponds or Cooling Towers Using Makeup Water from a River

Water from nearby lakes, rivers, and oceans is needed for both closed and once-through cooling systems. Water-use conflicts with terrestrial resources could occur if water from a single waterbody is required to simultaneously cool a spent fuel pool and support other water users such as agricultural, municipal, or industrial users. A conflict could arise if the surface-water resource is diminished because of decreased water availability due to low flow or drought conditions; increased demand for agricultural, municipal, or industrial usage; or a combination of factors (NRC 2013a).

The License Renewal GEIS evaluated the potential impacts on terrestrial biota and concluded that the impacts from water-use conflicts with terrestrial resources could, in certain situations, result in noticeable impacts on terrestrial resources (NRC 2013a). For example, Wolf Creek Generating Station in Kansas, which operates a cooling pond to cool plant systems, withdraws makeup water for the pond from the Neosho River located downstream of the John Redmond reservoir. The riparian communities downstream of the reservoir may be temporarily affected by the plant's water use during periods when the reservoir level is low and makeup water is obtained from the Neosho River (NRC 2013a). Water-use conflicts during reactor operations, such as those described previously, could result in SMALL to MODERATE impacts due to the uncertainty associated with water availability to a plant for future water use (see, e.g., NRC 2008a).

However, the water-withdrawal requirements for a spent fuel pool are considerably lower than those for a power reactor (see Table 4-1 and Section 4.7.1). The NRC staff assumes that a licensee would continue to withdraw surface water for the nuclear power plant's service-water system to provide cooling makeup water for the spent fuel pools during short-term storage. As noted in Section 4.8.1, a licensee could also use groundwater or a combination of surface water and groundwater given the reduced cooling demands of the spent fuel pool over time. Water withdrawals would continue to be subject to applicable water appropriation or allocation permit requirements, as well as Clean Water Act Section 316(b) requirements for minimizing adverse environmental impacts associated with the use of cooling-water-intake structures, as may be prescribed in NPDES permits. As part of the permit review, the responsible State, or governing water-basin commission where applicable, would assess the local water availability to help prevent water-use conflicts.

Table 4-1. Reference Plant Withdrawal Rates and Heat Loads

	Reactor		
	Once-Through Cooling	**Closed-Cycle Cooling**	**Spent Fuel Pool**
Withdrawal Rate (gpm)[a]	800,000[b]	12,000[c]	2,800[d]
Heat Load (10^6 BTU/hr)	10,000[b]	10,000[b]	35[b,e]

(a) The exact amount of water withdrawn depends on a variety of conditions, including water temperature, cooling system, size of the nuclear plant, and operational conditions.
(b) Approximate values based on a typical 1,000-MW(e) nuclear power plant.
(c) EPRI 2002.
(d) Value calculated based on a ratio of once-through cooling flow and heat load for a reactor, compared to design heat load for a spent fuel pool. Actual flow would vary based on site-specific characteristics, such as age and amount of spent fuel in the pool, surface-water temperature, etc. Value represents the maximum rate of water withdrawal expected during the timeframe analyzed in this GEIS, and would decrease as time after shutdown increases.
(e) Design heat load for a spent fuel pool.

Regardless of the makeup source, return service water, including heat removed from the fuel pool, would be discharged to the surface waterbody in an open cycle, as further discussed in Section 4.10.1.1. A delegated State agency or the EPA would also require the licensee to continue to operate under a modified or new NPDES permit, which would limit the chemical quality and temperature characteristics of the facility's surface water discharge so that no water-quality impairment or use conflict occurs. In addition, the State agency or the EPA would review and, if necessary, update the NPDES permit every 5 years. Therefore, the NRC concludes that water-use conflicts during short-term storage would have minimal impacts on terrestrial resources.

Other Potential Impacts from the Spent Fuel Pool Cooling System

The License Renewal GEIS determined that all other potential impacts on terrestrial ecology from the operation of the cooling system would be SMALL at all nuclear power plant sites. These additional impacts include the following:

- exposure of terrestrial organisms to radionuclides,
- cooling-system impacts on terrestrial resources (plants with once-through cooling systems or cooling ponds), and
- cooling-tower impacts on vegetation.

The License Renewal GEIS determined that these impacts on terrestrial ecology would be SMALL at all power plants based on review of literature, operational monitoring reports, consultations with utilities and regulatory agencies, and license renewal supplemental EISs (SEISs) published to date. The License Renewal GEIS indicated that exceptions have been observed at some nuclear plants; however, licensees have addressed the impacts by changing plant operations to prevent impacts.

For example, the License Renewal GEIS reviewed scientific literature on the effects of radiological doses to biota, and compared those results with the dose rates that have been estimated for terrestrial biota at several nuclear power plants, including plants with spent fuel pools. Based on this assessment, the NRC staff determined that exposure of terrestrial organisms to radionuclides near nuclear power plants was sufficiently less than the U.S. Department of Energy (DOE) and the International Atomic Energy Agency (IAEA) guidelines for radiation dose rates from environmental sources. Further, the levels of plant effluents are limited by radiation standards for human exposure, and those limitations are generally considered to be sufficiently protective of biota other than human. Given that the License Renewal GEIS and site-specific analyses included potential impacts from both operating reactors and spent fuel pools, and that the frequency and quantity of radionuclides released will decrease after reactor shutdown, previous EISs for power reactors contain impact determinations that bound the effects of continued storage on terrestrial resources.

Similarly, during the short-term timeframe, because reactor operations have ceased, the other impacts described above will be less than during operations. Also, because the cooling system requirements for the spent fuel pool (e.g., intake and discharge water volume and heat load rejected) are much less than for an operating reactor, the impacts of the operation of the cooling system will be much less than those considered in the License Renewal GEIS. Therefore, the NRC has determined that the impacts of the spent fuel pool cooling system on terrestrial ecology will be minimal during short-term storage.

Impacts from the Operation and Maintenance of Systems and Structures at the Nuclear Power Plant Site

The License Renewal GEIS evaluated other potential impacts on terrestrial resources from sources other than the operation of the spent fuel pool cooling system. These additional impacts include the following:

- electromagnetic fields on flora and fauna,
- bird collisions with plant structures and transmission lines, and
- transmission-line right-of-way management impacts on terrestrial resources.

The NRC determined in the License Renewal GEIS that these impacts on terrestrial ecology would be SMALL. During the short-term timeframe, electrical power will still be required to operate the spent fuel pool cooling system and to provide power to the system associated with the operation of ISFSIs (e.g., lighting). Licensees may choose to power these systems by maintaining the existing transmission-line infrastructure or replacing this infrastructure with a smaller capacity distribution system. This new distribution system would have smaller impacts than the existing transmission lines because of the smaller profile, reduced electromagnetic field, and reduced vegetative maintenance required around the distribution lines. In addition, fewer structures will be required to be maintained during the short-term timeframe, which would reduce the likelihood of bird collisions with nuclear power plant structures. As a result, the NRC has determined that the impacts from the operation and maintenance of systems and structures at the nuclear power plant site on terrestrial ecology will be minimal during short-term storage.

4.9.1.2 ISFSIs

Normal operation of an ISFSI does not require water for cooling and the facility would produce minimal gaseous or liquid effluents. Therefore, no water withdrawal and minimal discharges would be associated with the operation of ISFSIs. Some radiological exposure and maintenance activities would occur during operation. Maintenance may include some ground-disturbing or rights-of-way management activities. However, impacts on terrestrial resources from short-term storage, including routine maintenance activities, would be temporary.

After they are constructed, at-reactor ISFSIs have similar impacts on terrestrial resources, regardless of their location, due to the passive nature and small size of an at-reactor ISFSI and because minimal liquid or gaseous effluents are generated during normal operations. This is supported by a number of site-specific EAs performed in support of licensing actions that have looked at the environmental impacts on terrestrial resources during ISFSI operations. For example, a number of these reviews found that the ISFSIs would not contribute any significant impacts on terrestrial resources during normal operations (see, e.g., NRC 2012a, 2005a, 2003). Normal operation of an ISFSI would not generate any significant noise, would not significantly affect the area available for terrestrial wildlife, and would not adversely affect terrestrial environments or their associated plant and animal species (see, e.g., NRC 2012a, 2005a, 2003). In addition, while the air temperature in the immediate vicinity of the casks will be higher than ambient temperature, the affected area is limited by the distance from the casks to receptors and is not expected to affect terrestrial resources (see, e.g., NRC 2009a). To the extent that animals and birds are affected by ISFSI operations, they would likely either accustom themselves to regular operations or would relocate away from the facility (see, e.g., NRC 2012a). Further, licensees are required to adhere to the protection of eagles and migratory birds under the Federal Bald and Golden Eagle Protection Act and Migratory Bird Treaty Act. In addition, coordination with State natural resource agencies may further ensure that power plant operators take appropriate steps to avoid or mitigate impacts on State species of special concern that may not be protected under other Federal statutes.

4.9.1.3 Conclusion

Impacts associated with the operation of spent fuel pools and at-reactor ISFSIs would be bounded by the impacts analyzed in the License Renewal GEIS and example ISFSI EAs previously discussed. For operation of the spent fuel pool cooling system, impacts would be bounded by those discussed in the License Renewal GEIS, primarily due to the reduced cooling system requirements for the spent fuel pool (e.g., intake and discharge water volume and heat load rejected). For ISFSI operations, impacts would be similar to those described in example ISFSI EAs because of the passive nature and small size of ISFSIs, and because minimal liquid or gaseous effluents are generated during normal operations. Therefore, the NRC concludes that impacts on terrestrial resources from the operation of spent fuel pools and ISFSIs during the short-term storage timeframe would be SMALL.

4.9.2 Long-Term Storage

During the long-term timeframe, routine maintenance and monitoring of the ISFSIs continues, and the NRC assumes that a DTS is constructed and replaced, the fuel is moved from existing dry storage casks to new dry storage casks, and a new ISFSI is constructed.

Impacts from the ongoing maintenance and monitoring of ISFSIs on terrestrial resources during long-term storage would be similar to the impacts on terrestrial resources from short-term

storage, described in Section 4.9.1. These impacts would be minimal due to the small size of the ISFSIs, because water is not used for cooling, and because minimal liquid or gaseous effluents are generated during normal operations.

ISFSIs are designed as passive systems that require no new or additional long-term maintenance; however, an at-reactor ISFSI is assumed, for this GEIS, to require replacement within the long-term storage timeframe, which would require repackaging of spent fuel at a DTS. Replacement of the ISFSI would occur within the plant's operational area near existing facilities. The older ISFSI would be demolished and the land reclaimed and maintained for the next 100 years.

Impacts on terrestrial resources from ISFSI replacement activities would be similar to those impacts evaluated for the decommissioning of an existing at-reactor ISFSI and the construction of a new at-reactor ISFSI.

During the removal of an existing at-reactor ISFSI, increases in noise levels and changes in localized air quality as a result of fugitive dust and equipment exhaust emissions would likely result in animals and birds temporarily avoiding the activity area. Expected ground-disturbing, re-grading, and reseeding activities associated with removal of the ISFSI are not expected to substantially affect local vegetation. Unless the reclaimed area will be used for another purpose, wildlife would likely re-inhabit the area as vegetation begins to reestablish itself (see, e.g., NRC 2012a).

The impacts of the replacement and management of an ISFSI would be minimal because the construction footprint of an ISFSI is relatively small, the ISFSI would be sited in a previously disturbed area, and the licensees would likely be required to implement best management practices as part of their NPDES permits to address issues such as stormwater runoff. This is supported by a number of site-specific EAs performed in support of licensing actions that have looked at the environmental impacts of the construction of an ISFSI on terrestrial resources. For example, the NRC concluded in the EA for the Calvert Cliffs ISFSI renewal that the impact on ecological resources from decommissioning would be SMALL and would not be significant in part because the 2.4-ha (6-ac) ISFSI area was previously disturbed by ISFSI construction (NRC 2012a). Also, the NRC did not identify any significant impacts on terrestrial resources from construction of the Humboldt Bay ISFSI in part due to the fact that ground-disturbing activities would be limited to 0.4 ha (1 ac) and the ISFSI would not be located near any terrestrial features (NRC 2005a). Similarly, the construction footprint for the Diablo Canyon ISFSI was limited to 2.0 ha (5 ac) and was sited in a previously disturbed area (NRC 2003). In addition, the NRC indicated that controls would be in place to minimize any site runoff, spillage, and leaks (NRC 2003, 2005a). Stormwater control measures, which would be required to comply with NPDES permitting, would also minimize the impacts of site runoff, spillage, and leaks on nearby wetlands.

Like an ISFSI, a DTS would be located within the operational area near existing facilities and, like ISFSI replacement and maintenance activities, a DTS would require construction, replacement, and maintenance activities. Impacts on terrestrial resources from repackaging, operation, and replacement of the DTS would be limited. Like ISFSIs, a DTS could likely be sited on previously disturbed ground or away from sensitive terrestrial features because of the relatively small construction footprint for a DTS (about 0.7 ha [2 ac]) compared to the entire power plant site and because there is a sufficient amount of previously disturbed area on most nuclear power plant sites. The NRC assumes that construction and eventual replacement of a DTS would be temporary (1 to 2 years) and would require a small fraction of the land (about 0.7 ha [2 ac]) committed for a nuclear power plant. The construction laydown area would be reclaimed and revegetated after construction or replacement is completed. There may be temporary increases in traffic, soil erosion, noise, fugitive dust, and habitat reduction from construction, replacement, and refurbishment activities that could affect terrestrial resources. The plant operator could implement best management practices to minimize land disturbances, vegetation removal, erosion, noise, and dust. DTSs and ISFSIs do not require water for cooling. Minimal liquid or gaseous effluents are generated during normal operation. Thus construction, repackaging, and replacement activities for ISFSIs and DTSs would have minimal impacts on terrestrial resources for reasons previously explained. In addition, the NRC expects that normal operations of DTSs and ISFSIs would not generate any significant noise, would not significantly affect the area available for terrestrial wildlife, and would not adversely affect terrestrial environments or their associated plant and animal species. Therefore, the NRC concludes that impacts on terrestrial resources during the long-term storage timeframe would be SMALL.

4.9.3 Indefinite Storage

During indefinite storage, the activities that occur during long-term storage would continue and the ISFSI and DTS would be replaced every 100 years. The NRC concluded in Section 4.9.2 that impacts on terrestrial resources during long-term storage would be SMALL because continued operations, repackaging, DTS construction, and DTS and ISFSI replacement would not adversely affect terrestrial environments or their associated plant and animal species. In addition, replacement of the ISFSI and DTS would likely occur on land near existing facilities and could be sited on previously disturbed ground away from terrestrial species and habitats. By alternating the ISFSI between two onsite locations, the NRC expects the upper limit of land disturbances to be bounded by doubling the land area developed for existing ISFSIs presented in Table 3-1. The older ISFSIs and DTSs would be demolished and the land likely reclaimed. Therefore, the NRC concludes that the impacts on terrestrial resources from indefinite storage of spent fuel at at-reactor ISFSIs would be SMALL.

4.10 Aquatic Ecology

This section describes potential aquatic ecology impacts caused by the continued storage of spent fuel in spent fuel pools and at-reactor ISFSIs. Impacts on aquatic resources include impingement and entrainment; thermal impacts; effects of cooling-water discharge on dissolved oxygen, gas supersaturation, and eutrophication (the over-enrichment of water by nutrients such as nitrogen phosphorus); effects of nonradiological contaminants on aquatic organisms; exposure of aquatic organisms to radionuclides; water-use conflicts with aquatic organisms; and losses from predation, parasitism, and disease among organisms exposed to sublethal stresses.

4.10.1 Short-Term Storage

During the short-term storage timeframe, many activities that occurred during the operation of the reactor that could affect aquatic resources would cease. However, aquatic resources will likely continue to be affected during this timeframe by the continued operation of the spent fuel pool cooling system and the at-reactor ISFSI.

4.10.1.1 Spent Fuel Pools

The following discussion describes the impacts of spent fuel pools during short-term storage, using the impact determinations from the License Renewal GEIS to inform the NRC's analysis of these impacts during short-term storage.

Operation of a spent fuel pool and its associated cooling system during the short-term storage timeframe would require the withdrawal of water and discharge of effluents into a nearby waterbody. To make this comparison, the NRC evaluated the effects of the continued operation of nuclear power plants, which included the operation of associated spent fuel pools, on aquatic ecology in the License Renewal GEIS (NRC 2013a). The NRC then looked at the systems that would be needed to cool the spent fuel pool during short-term storage, and compared the impacts associated with water use during operations to the impacts associated with water use after the end of operations.

Impingement and Entrainment of Aquatic Organisms

Aquatic organisms can be impinged or entrained when cooling-water intakes for spent fuel pools withdraw water that provides habitat to fish, shellfish, plankton, or other aquatic resources. Impingement, which mostly involves fish and shellfish, occurs when organisms are held against the intake screen or netting placed within intake canals. Exhaustion, starvation, asphyxiation, descaling, and physical stresses may kill or injure impinged organisms. The License Renewal GEIS describes some of the fish species commonly impinged at operating power plants as well as other vertebrate species that may also be impinged on the traveling screens or on intake

netting placed within intake canals (NRC 2013a). These species would likely continue to be impinged as a result of operation of the spent fuel pool cooling system during the short-term storage timeframe.

Impingement

Impingement is the entrapment of all life stages of fish and shellfish on the outer part of an intake structure or against a screening device during periods of water withdrawal (40 CFR 125.83).

Entrainment

Entrainment is incorporation of all life stages of fish and shellfish with intake water flow entering and passing through a cooling-water-intake structure and into a cooling-water system (40 CFR 125.83).

Entrainment occurs when organisms pass through the intake screens and travel through the spent fuel pool condenser cooling system. Heat, physical stress, or chemicals used to clean the cooling system may kill or injure the entrained organisms. Due to these physical stresses, the NRC assumes 100 percent mortality for all entrained organisms. Typically entrained aquatic organisms include ichthyoplankton (fish eggs and larvae), larval stages of shellfish and other macroinvertebrates, zooplankton, and phytoplankton. Juveniles and adults of some species may also be entrained if they are small enough to pass through the intake screen openings, which are commonly 1 cm (0.4 in) at the widest point. The License Renewal GEIS describes some of the fish species commonly entrained at operating power plants (NRC 2013a). These species would likely continue to be entrained as a result of operation of the spent fuel pool cooling system during the short-term storage timeframe.

The severity of impacts associated with impingement and entrainment is dependent upon several factors including the amount of water withdrawn relative to the size of the cooling-water source, location and configuration of intake structures, type of waterbody from which water is withdrawn, conditions within that waterbody, proximity of withdrawal structures to sensitive biological habitats (e.g., spawning and nursery habitats), sensitivity of populations of impinged and entrained organisms to potential losses of individuals, and mitigation measures in place to reduce impingement and entrainment (NRC 2013a). Among these factors, the volume of water withdrawn relative to the size of the water source can be a good predictor of the number of organisms that would be impinged or entrained within a given aquatic system (EPA 2002). Impingement monitoring at the Palisades Nuclear Plant in Michigan demonstrates this difference: In 1972, when the plant used once-through cooling with a water-withdrawal rate of 1,500,000 L/min (400,000 gpm), 654,000 fish were impinged yearly. In 1976, cooling towers were added to the plant, and it began operating as a closed-cycle plant. The intake withdrawal rate was reduced to 295,000 L/min (78,000 gpm), and impingement dropped to 7,200 fish per year (Consumers Energy Company and Nuclear Management Company 2001). These results showed that an approximate 80 percent decrease in water withdrawal resulted in an approximate 98 percent decrease in impingement at Palisades Nuclear Plant.

The License Renewal GEIS concluded that the impacts from impingement and entrainment would be SMALL, MODERATE, or LARGE at operating plants with once-through cooling, cooling ponds, or hybrid cooling (NRC 2013a). The magnitude of the impact would depend on plant-specific characteristics of the cooling system (including location, intake velocities, screening technologies, and withdrawal rates) and characteristics of the aquatic resource (including population distribution, status, management objectives, and life history). However, for operating plants with closed-cycle cooling, the License Renewal GEIS generically concluded that impingement and entrainment is SMALL (NRC 2013a). The main reason the License Renewal GEIS could generically conclude that the impacts would be SMALL at all closed-cycle cooling plants is because power plants with closed-cycle cooling require much less water than those with once-through cooling. For example, EPRI estimated that the average flow rate for a reference 1,000-MW(e) nuclear plant with closed-cycle would be 45,000 L/min (12,000 gpm), which is approximately 1 to 3 percent of the flow rate for a reference 1,000-MW(e) plant with once-through cooling, 1,577,000 to 3,800,000 L/min (416,700 to 1,000,000 gpm) (EPRI 2002). Reactors are typically cooled either by transferring excess heat directly to a water source (referred to as open-cycle cooling) or to the atmosphere through a cooling tower (referred to as closed-cycle cooling). For nuclear power plants with closed-cycle cooling systems, cooling water for the service-water system (which cools the spent fuel pool) is usually withdrawn from a surface waterbody, circulated through the service-water system, and sent to the cooling tower as a source of makeup water for the main cooling system. While it is typically used as a source of makeup water, the discharge from the service-water system can also be returned to the surface waterbody, functioning, in essence, like an open-cycle cooling system. Because the heat load associated with the spent fuel pool during continued storage is significantly smaller than a reactor at full power and because of the costs associated with operating the cooling towers, the NRC assumes that, for nuclear power plants with closed-cycle cooling systems, those systems will be operated in a manner similar to an open-cycle cooling system to cool the spent fuel pool during the short-term timeframe. As discussed below, the NRC expects that the flow rate associated with the water needed to cool the spent fuel pool after operations will be significantly less than the overall water needed during operation of the reactors, regardless of the cooling technology used to cool the reactors. When compared to a once-through cooling system, the water needed to cool the spent fuel pool is orders of magnitude less than the water needed during reactor operations.

To operate spent fuel pools during short-term storage, the service-water system would likely continue to operate to cool the spent fuel pools. Cooling systems associated with spent fuel pools require substantially less water volume and carry a lower heat load than operating nuclear power plants, as indicated in Table 4-1. For example, based on the current operation of spent fuel pools, the NRC estimates that approximately 10,600 L/min (2,800 gpm) would be withdrawn at each spent fuel pool. Operating reactors with closed-cycle cooling systems, on the other hand, withdraw approximately 45,400 L/min (12,000 gpm) and operating plants with once-through cooling require 1,577,000 to 3,800,000 L/min (416,700 to 1,000,000 gpm) (EPRI 2002).

In addition, the amount of water withdrawn to cool spent fuel pools is likely to decrease over the short-term storage timeframe because the spent fuel pool would require less cooling as the spent fuel cools. Based on the reduced operational requirements for spent fuel pool cooling systems (e.g., reduced water-withdrawal and discharge rates), the impingement and entrainment impacts from an operating nuclear plant bound the potential impacts from operating spent fuel pools during short-term storage.

Because operating the spent fuel pool cooling system during the short-term timeframe will use less water than operating the cooling system for an operating plant with a closed-cycle cooling system, which was considered in the License Renewal GEIS, the NRC concludes that impingement and entrainment impacts from operating spent fuel pools during continued storage would have minor impacts on aquatic resources.

Heat Shock

Water-based cooling systems for spent fuel pools generally discharge heated effluent into nearby waterbodies. Heat shock can occur if the water temperature meets or exceeds the thermal tolerance of a species for some duration (NRC 2007a). In most situations, fish are capable of moving out of an area that exceeds their thermal tolerance limits, although many aquatic resource species lack such mobility. Heat shock is typically observable only for fish species, particularly those that float when dead. The License Renewal GEIS provides additional details on observed fish kills and other potential environmental impacts from heat shock.

The severity of impacts for heat shock depends on the characteristics of the cooling system (including location and type of discharge structure, discharge velocity and volume, and three-dimensional characteristics of the thermal plume) and characteristics of the affected aquatic resources (including the species present and their physiology, habitat, population distribution, status, management objectives, and life history). Site-specific design features, such as locating the discharge structures in areas where warmer water would be rapidly diluted, may mitigate adverse thermal effects (Beitinger et al. 2000). Hall et al. (1978) determined that the potential for thermal discharge impacts is greatest in shallow, enclosed, and poorly mixed waterbodies.

The License Renewal GEIS concluded that for operating plants with a once-through cooling system or cooling ponds, the level of impact for thermal discharge on aquatic biota (primarily due to heat shock) was SMALL at many plants and MODERATE or LARGE at some plants. For example, some nuclear plants have reported occasional fish kills from heat shock (see, e.g., NRC 2006b, 2007a; Exelon 2001, 2005). For operating plants with closed-cycle cooling, the NRC conducted a review of the literature and license renewal SEISs published to date and determined that reduced populations of aquatic biota attributable to occurrences of heat shock have not been reported for any existing nuclear power plants with cooling towers operated in closed-cycle mode. Based on this review and because of the smaller thermal plumes at plants

with closed-cycle cooling compared to plants with once-through cooling systems, the License Renewal GEIS concluded that impacts from heat shock would be SMALL at all plants with closed-cycle cooling. The thermal plume is generally smaller at plants with closed-cycle cooling because less water is being discharged (NRC 2013a).

As described above, cooling systems associated with spent fuel pools operating during the short-term storage timeframe would require substantially less water volume and carry a lower heat load compared to operating nuclear power plants with closed-cycle cooling systems (see Table 4-1). In addition, the heat load in the spent fuel pool would decrease over time as the fuel continues to decay. Because the amount of water discharged from a spent fuel pool, regardless of the type of cooling system, would still be significantly less than the amount of water discharged from an operating plant with closed-cycle cooling, the extent of the thermal plume would likely be smaller. In addition, the licensee would be required to obtain an NPDES permit for thermal discharges, and the permit would limit the amount and temperature of thermal effluent to be discharged. The NPDES permit would also require the licensee to monitor and ensure the effluent is within the set thermal limit. Based on this information, the thermal impacts from an operating nuclear plant with closed-cycle cooling (which was determined to be SMALL in the License Renewal GEIS) likely bounds the potential thermal impacts from operating spent fuel pools beyond the licensed term of the nuclear plant.

The NRC has determined that thermal impacts from operating spent fuel pools beyond the licensed term of the plant would have a minor impact on aquatic resources because operating the spent fuel pool cooling system during the short-term storage timeframe will use less water than operating a closed-cycle cooling system for an operating reactor and a spent fuel pool considered in the License Renewal GEIS.

Water-Use Conflicts with Aquatic Resources at Plants with Cooling Ponds or Cooling Towers Using Makeup Water from a River

Water-use conflicts with aquatic resources could occur if water from a single waterbody is required to simultaneously cool a spent fuel pool; support aquatic resources, and support other water users (e.g., agricultural, municipal, or industrial users). A conflict could arise if the surface-water resource is diminished either because of decreased water availability due to droughts; increased demand for agricultural, municipal, or industrial usage; or a combination of factors. The License Renewal GEIS determined that water-use conflicts during plant operation are a concern for streams or rivers because of the duration of license renewal and potentially increasing demands on surface water. However, the water-withdrawal requirements for a spent fuel pool during short-term storage are considerably lower than for an operating plant (see Table 4-1). In addition, the spent fuel pool operator would be subject to applicable water appropriation or allocation permit requirements and NPDES permit provisions, which would limit the amount of water that could be withdrawn and the quality of effluent discharged, respectively, as previously described in Section 4.9.1.1. Because operating the spent fuel pool cooling

system during short-term storage will use significantly less water than operating the cooling system for an operating plant considered in the License Renewal GEIS, the NRC has determined that water-use conflicts from operating spent fuel pools during short-term storage would have minimal impacts on aquatic resources.

Other Potential Impacts from the Cooling System

The License Renewal GEIS determined that all other potential impacts on aquatic ecology from the operation of the cooling system would be SMALL at all nuclear power plants. These additional impacts include the following:

- cold shock, which can occur when organisms acclimated to the elevated temperatures of a thermal plume are abruptly exposed to temperature decreases when the artificial source of heating stops;
- the creation of thermal plume migration barriers, which would occur if the mixing zone of the thermal plume covers an extensive cross-sectional area of a river and exceeds the fish avoidance temperature (NRC 2013a);
- changes in the distribution of aquatic organisms;
- accelerated development of aquatic insect maturation due to warmer temperatures;
- stimulation of the growth of aquatic nuisance species;
- effects of cooling-water discharge on dissolved oxygen, gas supersaturation, and eutrophication;
- effects of nonradiological contaminants on aquatic organisms;
- exposure of aquatic organisms to radionuclides; and
- losses from predation, parasitism, and disease among organisms exposed to sublethal stresses.

In the License Renewal GEIS, the NRC determined that these impacts would be SMALL at all nuclear power plants. The NRC based its conclusion on the following:

- Any fill kills or other events related to the impacts described previously were relatively rare and did not result in population level impacts.
- The heat from the thermal plume usually dissipated rapidly.
- Heated plumes are often small relative to the size of the receiving waterbody. The License Renewal GEIS provides additional details regarding these potential impacts and the studies reviewed to support the SMALL conclusion.

In evaluating the exposure of aquatic organisms to radionuclides, the License Renewal GEIS reviewed scientific literature on the effects of radiological doses to biota, and compared those results with the dose rates that have been estimated for aquatic biota at several nuclear power plants, including plants with spent fuel pools. Based on this assessment, the NRC determined that exposure of aquatic organisms to radionuclides near nuclear power plants was sufficiently less than the DOE and IAEA guidelines for radiation dose rates from environmental sources. Further, the levels of plant effluents are limited by radiation standards for human exposure, and those limitations are generally considered to be sufficiently protective of biota other than human. Given that the License Renewal GEIS and site-specific analyses included potential impacts from both operating reactors and spent fuel pools, and that the frequency and quantity of radionuclides released will decrease after reactor shutdown, previous EISs for power reactors contain impact determinations that bound the effects of continued storage on aquatic resources.

As described above, the water-withdrawal rate, discharge rates, and extent of the thermal plume would be greater for an operating plant than a spent fuel pool during short-term storage (see Table 4-1). Based on this information, the other potential impacts from an operating a nuclear plant with closed-cycle cooling (which was determined to be SMALL in the License Renewal GEIS) likely bound the potential impacts from operating spent fuel pools during short-term storage. Because operating the spent fuel pool cooling system during short-term storage will use less water than operating the cooling system for an operating plant considered in the License Renewal GEIS, the NRC has determined that other potential impacts from operating spent fuel pools during the short-term storage timeframe would have minimal impacts on aquatic resources.

4.10.1.2 ISFSIs

The NRC reviewed example ISFSI EAs to inform its analysis of the environmental impacts of ISFSIs on aquatic resources during short-term storage.

During normal operations, ISFSIs do not require water for cooling and the facility would produce minimal gaseous or liquid effluents. Therefore, no water withdrawal or discharges would be associated with the operation of ISFSIs. Some maintenance activities could occur during ISFSI operation. However, impacts on any aquatic features would be minimal. Stormwater control measures, which would be required to comply with NPDES permitting, would also minimize the flow of disturbed soils or other contaminants into aquatic features. In addition, the plant operator would likely implement best management practices to minimize erosion and sedimentation and control any runoff, spills, or leaks (NRC 2005a, 2003). For example, the EAs for the Calvert Cliffs, Humboldt Bay, and Diablo Canyon ISFSIs did not identify any significant impacts on aquatic resources during normal operations of an onsite dry cask storage facility (NRC 2003, 2005a, 2012a). Consequently, given that ISFSIs do not require water for cooling

and the facility would produce minimal gaseous or liquid effluents, impacts on aquatic resources from the operation of ISFSIs during short-term storage would not have noticeable impacts on aquatic resources.

4.10.1.3 Conclusion

Given that the impacts associated with the operation of spent fuel pools would likely be bounded by the impacts analyzed in the License Renewal GEIS due to the lower withdrawal rates, lower discharge rate, smaller thermal plume, and lower heat content for a spent fuel pool compared to an operating reactor with closed-cycle cooling, the NRC concludes that impacts on aquatic resources from the operation of spent fuel pools during short-term storage would be minimal. In addition, the impacts from operation of at-reactor ISFSIs would be minimal because ISFSIs do not require water for cooling, produce minimal gaseous or liquid effluents, and ground-disturbing activities for ISFSI maintenance would have minimal impacts on aquatic ecology. Therefore the NRC concludes that the potential environmental impacts on aquatic resources would be SMALL during the short-term storage timeframe.

4.10.2 Long-Term Storage

Routine maintenance and monitoring of the ISFSIs would continue during long-term storage. Likewise, the impacts from routine maintenance and monitoring of ISFSIs during the short-term storage timeframe would continue during the long-term storage timeframe and would remain the same.

Due to the relatively small construction footprint of a DTS, a DTS could likely be sited and constructed on land near existing facilities, on previously disturbed ground, and away from sensitive aquatic features. In addition, the replacement DTS and ISFSI facilities could likely be sited on previously disturbed ground away from sensitive aquatic features. For example, the NRC did not identify any significant impacts on aquatic resources from construction of the Humboldt Bay ISFSI in part due to the fact that ground-disturbing activities would be limited to 0.4 ha (1 ac) and the ISFSI was not located near any aquatic features (NRC 2005a). Similarly, the construction footprint for the Diablo Canyon ISFSI was limited to 2 ha (5 ac) and was sited in a previously disturbed area that did not contain any sensitive aquatic features (NRC 2003). In addition, the NRC (2003, 2005a) indicated that controls would be in place to minimize the flow of any site runoff, spillage, and leaks into sensitive aquatic features. For example, stormwater control measures, which would be required to comply with NPDES permitting, would minimize the flow of disturbed soils or other contaminates into aquatic features. The plant operator could also implement best management practices to minimize erosion and sedimentation.

ISFSIs and DTSs do not require water for cooling and produce minimal gaseous or liquid effluents. In addition, replacement ISFSIs and DTSs would be sited on previously disturbed

ground away from sensitive aquatic features. The older ISFSIs and DTSs would be demolished and the land reclaimed. Therefore, the NRC concludes that impacts on aquatic resources during long-term storage would be SMALL.

4.10.3 Indefinite Storage

During indefinite storage, the activities that occur during long-term storage would continue and the ISFSIs and DTSs would be replaced every 100 years. Therefore the impacts that occurred during long-term storage would continue. The NRC concluded in Section 4.10.2 that impacts on aquatic resources would be SMALL because ISFSIs do not require water for cooling and would have minimal impacts on aquatic resources. In addition, replacement of the ISFSIs and DTSs would occur near existing facilities and would be sited on previously disturbed ground away from sensitive aquatic features. The older ISFSIs and DTSs would be demolished and the land reclaimed. Therefore, the NRC concludes that the impacts on aquatic resources from indefinite storage of spent fuel in at-reactor ISFSIs would be SMALL.

4.11 Special Status Species and Habitat

This section describes potential environmental impacts on special status species and their habitats caused by the continued storage of spent fuel in spent fuel pools and at-reactor ISFSIs. Special status species and habitats may include those identified in Section 4.9 for terrestrial resources and Section 4.10 for aquatic resources.

4.11.1 Short-Term Storage

Impacts on Federally listed species, designated critical habitat, essential fish habitat, and other special status species and habitats during short-term storage may occur from spent fuel pool or ISFSI operations.

4.11.1.1 Spent Fuel Pools

Given that Federally listed species, designated critical habitat, essential fish habitat, State-listed species, marine mammals, migratory birds, and bald and golden eagles may be affected by operation of cooling systems for nuclear power plants, special status species and habitats could also be affected by the operation of cooling systems for spent fuel pools during the short-term storage timeframe. Possible impacts on Federally listed species, designated critical habitat, essential fish habitat, State-listed species, marine mammals, migratory birds, and bald and golden eagles would be similar to those described in Sections 4.9.1 and 4.10.1 for terrestrial and aquatic resources.

The Endangered Species Act (ESA) forbids “take” of a listed species, where “take” means to “harass, harm, pursue, hunt, shoot, wound, kill, trap, capture, or collect, or attempt to engage in

any such conduct." Prior to entering the short-term storage timeframe, the NRC would have addressed impacts on Federally listed species and designated critical habitats through the ESA Section 7 consultation process at the time of original licensing, license renewal of the power plant (including the spent fuel pool cooling system), and for any other agency action as defined by the ESA that could affected listed species. For agency actions as defined by the ESA where listed species or designated critical habitat may be affected, the NRC would initiate ESA Section 7 consultation with the National Marine Fisheries Service (NMFS) or the U.S. Fish and Wildlife Service (FWS). This consultation may be either formal or informal, depending on the specific adverse effect. In the case of an adverse effect for which the NRC would issue a biological assessment that initiates formal consultation, the FWS or NMFS would issue a Biological Opinion in accordance with the provisions of formal consultation at 50 CFR 402.14. The FWS or NMFS could issue, with a Biological Opinion, an incidental take statement that contains provisions exempting a certain incidental take of Federally listed species and reasonable and prudent measures necessary or appropriate to minimize impacts on Federally listed species and designated critical habitats.

After conclusion of an initial consultation, 50 CFR 402.16 directs Federal agencies to reinitiate consultation where discretionary Federal involvement or control over the action has been retained or is authorized by law, and where (a) the amount or extent of taking specified in the incidental take statement is exceeded, (b) new information reveals effects on Federally listed species or designated critical habitats that were not previously considered, (c) the action is modified in a manner that causes effects not previously considered, or (d) new species are listed or new critical habitat is designated that may be affected by the action. For example, the Oyster Creek nuclear plant exceeded its incidental take limit established by the NMFS for Kemp's ridley sea turtles. The NRC, therefore, was required to reinitiate ESA Section 7 consultation with NMFS, which included the reevaluation of the impacts on the Kemp's ridley sea turtles and potential mitigation measures (NRC 2013a). Thus, the ESA Section 7 consultation process would help identify any impacts on Federally listed species or designated critical habitat, potentially require monitoring and mitigation to minimize impacts on listed species, and ensure that any takes that occur as a result of cooling-system operations are exempted by the incidental take statement. Regulations and guidance regarding the ESA Section 7 consultation process are provided in 50 CFR Part 402 and in the *Endangered Species Consultation Handbook* (FWS/NMFS 1998), respectively.

Federally listed species and designated critical habitats would continue to be protected under the ESA during the short-term storage timeframe. As described above the NRC would be required to reinitiate consultation with the FWS and NMFS for NRC actions as defined in the ESA that could affect listed species. For example, for nuclear power plants with a Biological Opinion, the NRC would need to reinitiate consultation with the FWS or NMFS if there is a significant change in the plant parameters described in the Biological Opinion that could affect listed species or designated critical habitats in a manner or to an extent not previously

considered and if the criteria in 50 CFR 402.16 are met for reinitiation of Section 7 consultation. The most likely change in a plant parameter during short-term storage would be a decrease in water-withdrawal and discharge rates due to the lower water demands to operate a spent fuel pool than to operate a nuclear power reactor. Impacts on special status species and habitats would likely decrease due to less impingement, entrainment, and thermal impacts associated with lower withdrawal and discharge rates.

If operation of the spent fuel pool cooling system resulted in a “take” of a listed species not covered under a Biological Opinion and if the criteria in 50 CFR Part 402 are met for initiation or reinitiation of Section 7 consultation, the NRC would be required to initiate or reinitiate ESA consultation with the FWS or NMFS. The official lists of ESA-listed species are updated by the FWS and NMFS. Species may be added to the list or delisted. If new species were listed under the ESA, the NRC would assess any potential impacts on those species at all NRC-licensed facilities at the time of listing. Therefore, if a new species were listed after the licensed life of the associated nuclear reactor, and if the criteria in 50 CFR Part 402 are met for initiation of Section 7 consultation, the NRC would determine if the newly listed species could occur near a spent fuel pool and would initiate ESA Section 7 consultation if operation of a spent fuel pool could adversely affect the newly listed species.

The NRC is required under the Magnuson–Stevens Fishery Conservation and Management Act to consult with NMFS for any authorized, funded, or undertaken action, including permitting and licensing, that could adversely affect essential fish habitat. As part of this consultation, the NRC would assess the occurrence of and adverse impacts to essential fish habitat in an Essential Fish Habitat Assessment. The implementing regulations for the Magnuson–Stevens Fishery Conservation and Management Act (50 CFR Part 600) describe additional details regarding the steps involved in essential fish habitat consultation.

In addition, NRC and licensee coordination with other Federal and State natural resource agencies would further encourage licensees to take appropriate steps to avoid or mitigate impacts on special status species, habitats of conservation concern, and other protected species and habitats, such as those protected under the Fish and Wildlife Coordination Act, Coastal Zone Management Act, Marine Mammal Protection Act, the Migratory Bird Treaty Act, and the Bald and Golden Eagle Protection Act, as applicable. NRC and licensee coordination with other Federal and State natural resource agencies would likely result in avoidance or mitigation measures that would minimize impacts on protected species and habitats.

4.11.1.2 ISFSIs

Impacts from the operation of ISFSIs on special status species and habitats would be similar to those described above for terrestrial and aquatic resources, which would be minimal due to the small size of the ISFSIs and because no water is required for cooling. For example, the NRC’s

EAs for the Humboldt Bay and Diablo Canyon ISFSIs did not identify any impacts on special status species during normal operations of at-reactor ISFSIs (NRC 2003, 2005a).

As described in Section 4.11.1.1, the NRC is required to consult with NMFS for actions that may adversely affect essential fish habitat. However, it is unlikely that ISFSIs would adversely affect essential fish habitat because they are built on land and do not require water for cooling. In the event that an ISFSI could adversely affect essential fish habitat, the NRC would consult with NMFS.

In addition, NRC and licensee coordination with Federal and State natural resource agencies would further encourage licensees to take appropriate steps to avoid or mitigate impacts on State-listed species, habitats of conservation concern, and other protected species and habitats, such as those protected under the Fish and Wildlife Coordination Act, Coastal Zone Management Act, Marine Mammal Protection Act, the Migratory Bird Treaty Act, and the Bald and Golden Eagle Protection Act, as applicable. NRC and licensee coordination with other Federal and State natural resource agencies would likely result in avoidance or mitigation measures that would minimize impacts on protected species and habitats.

4.11.1.3 Conclusion

As described above, the ESA has several requirements that would help ensure protection of Federally listed species and designated critical habitat during short-term storage. For spent fuel pools, the NRC would have addressed impacts on Federally listed species and designated critical habitats through the ESA Section 7 consultation process at the time of original licensing, license renewal of the power plant (including the spent fuel pool cooling system), and for any other agency action as defined by the ESA that may affect listed species. Following the conclusion of an initial consultation, 50 CFR 402.16 directs Federal agencies to reinitiate consultation in circumstances where discretionary Federal involvement or control over the action has been retained or is authorized by law and where (a) the amount or extent of taking specified in the incidental take statement is exceeded, (b) new information reveals effects on Federally listed species or designated critical habitats that were not previously considered, (c) the action is modified in a manner that causes effects not previously considered, or (d) new species are listed or new critical habitat is designated that may be affected by the action. During each consultation, the NRC would characterize the effects of spent fuel pools to listed species in terms of its ESA findings of (1) no effect, (2) may affect but is not likely to adversely affect, (3) may affect and is likely to adversely affect, or (4) likely to jeopardize the listed species or adversely modify the designated critical habitat of Federally listed species populations or their critical habitats. Similarly, in complying with the Magnuson–Stevens Fishery Conservation and Management Act, the NRC would report the effects of spent fuel pools in terms of the Act's required findings of (1) no adverse impact, (2) minimal adverse impact, or (3) substantial adverse impact on the essential habitat of Federally managed fish and shellfish populations. Impacts on other special status aquatic species, such as State-listed species,

would most likely be less than those experienced during the licensed life for operation of the reactor due to the smaller size of the spent fuel pool's cooling system and lower water demands when compared to those of an operating reactor.

For ISFSIs, given the small size and licensees' ability to site ISFSIs away from sensitive ecological resources, the NRC concludes that ISFSIs would likely have minimal impacts on State-listed species, marine mammals, migratory birds, and bald and golden eagles. In the unlikely situation that the continued operation of an ISFSI could affect Federally listed species or designated critical habitat, and if the criteria are met in 50 CFR Part 402 for initiation or reinitiation of ESA Section 7 consultation, the NRC would be required to initiate or reinitiate ESA Section 7 consultation with the NMFS or FWS. In the unlikely situation that the continued operation of an ISFSI could adversely affect essential fish habitat, and if the criteria are met in 50 CFR Part 600 for initiation of consultation under the Magnuson–Stevens Fishery Conservation and Management Act, the NRC would be required to initiate essential fish habitat consultation with NMFS.

4.11.2 Long-Term Storage

In addition to routine maintenance, operation, and monitoring of ISFSIs, impacts from the construction of a DTS and replacement of the DTS and ISFSIs on special status species and habitats would be similar to those described in Sections 4.9.2 and 4.10.2, which would be minimal due to the small size of the ISFSIs and DTSs and because no water is required for cooling. The same consultations and any associated mitigation requirements described in Section 4.11.1 would apply to construction of a DTS and replacement of the DTS and ISFSI during long-term storage. The NRC assumes that the ISFSIs and DTSs could often be sited to avoid Federally listed species and critical habitat due to the small size of the construction footprint and sufficient amount of previously disturbed areas on most nuclear power plant sites. For example, the EAs for the Humboldt Bay and Diablo Canyon ISFSIs did not identify any significant impacts on special status species from construction and normal operations of the at-reactor ISFSIs (NRC 2003, 2005a). In addition, coordination with Federal and State natural resource agencies would encourage licensees to take appropriate steps to avoid or mitigate impacts on State-listed species, habitats of conservation concern, and other protected species and habitats, such as those protected under the Fish and Wildlife Coordination Act, Coastal Zone Management Act, Marine Mammal Protection Act, the Migratory Bird Treaty Act, and the Bald and Golden Eagle Protection Act, as applicable. Therefore, the NRC concludes that construction of a DTS and the replacement of the DTS and ISFSI would likely have minimal impacts on State-listed species, marine mammals, migratory birds, and bald and golden eagles. In the unlikely situation that the continued operation of an ISFSI or operation of a DTS could affect Federally listed species or designated critical habitat, and if the criteria are met in 50 CFR Part 402 for initiation or reinitiation of ESA Section 7 consultation, the NRC would be required to initiate or reinitiate ESA Section 7 consultation with the NMFS or FWS. In the

unlikely situation that the continued operation of an ISFSI or operation of a DTS could adversely affect essential fish habitat, and if the criteria are met in 50 CFR Part 600 for initiation of consultation under the Magnuson–Stevens Fishery Conservation and Management Act, the NRC would be required to initiate essential fish habitat consultation with NMFS.

4.11.3 Indefinite Storage

The impacts of indefinite storage on special status species and habitats would be minimal and similar to those described in Sections 4.9.3 and 4.10.3. The same consultations and any associated mitigation requirements described in Section 4.11.1 would apply to the construction of the DTS and replacement of the DTS and ISFSI facilities during indefinite storage. For the reasons described in Section 4.11.2, the NRC concludes that the replacement of the DTS and ISFSI would likely have minimal impacts on State-listed species, marine mammals, migratory birds, and bald and golden eagles. In the unlikely situation that the continued operation of an ISFSI or operation of a DTS could affect Federally listed species or designated critical habitat, and if the criteria are met in 50 CFR Part 402 for initiation or reinitiation of ESA Section 7 consultation, the NRC would be required to initiate or reinitiate ESA Section 7 consultation with the NMFS or FWS. In the unlikely situation that the continued operation of an ISFSI or operation of a DTS could adversely affect essential fish habitat, and if the criteria are met in 50 CFR Part 600 for initiation of consultation under the Magnuson–Stevens Fishery Conservation and Management Act, the NRC would be required to initiate essential fish habitat consultation with NMFS.

4.12 Historic and Cultural Resources

This section describes potential impacts on historic and cultural resources caused by the continued storage of spent fuel in spent fuel pools and at-reactor ISFSIs.

The NRC is considering impacts on historic and cultural resources in this GEIS through implementation of its NEPA requirements in 10 CFR Part 51. This rulemaking is not a licensing action; it does not authorize the initial or continued operation of any nuclear power plant, and it does not authorize storage of spent fuel. Because the GEIS does not identify specific sites for NRC licensing actions, a NHPA Section 106 review has not been performed. However, the NRC complies with NHPA Section 106 and the implementing provisions in 36 CFR Part 800 in site-specific licensing actions. As discussed in Section 3.11, identification of historic properties, adverse effects, and potential resolution of adverse effects would be conducted through consultation and application of the National Register of Historic Places criteria in 36 CFR 60.4. This information would also be evaluated to determine the significance of potential impacts on historic and cultural resources in the NRC's environmental review documents.

As discussed in Section 3.11, most nuclear power plant sites are located in areas along waterways that people tended to settle near or travel along, so there is a potential for historic and cultural resources to be present. Waterways provided freshwater, the most abundant food sources, transportation, and trade routes. As a result, prehistoric era archaeological sites and historic-era sites tend to be found along these waterways (NRC 2013a). As part of the recent License Renewal GEIS update, the NRC reviewed historic and cultural resource reviews that were performed for 40 license renewals. In these reviews, historic and cultural resource sites tend to occur in the less-developed or undeveloped portions of the site away from the power block. Many applicants conducted surveys to identify historic and cultural resources for their site-specific reactor license renewal and new reactor license applications, and they have developed and implemented historic and cultural resource management plans and procedures that protect known historic and cultural resources and address inadvertent discoveries. However some licensees may not have historic and cultural resource management plans or procedures.

As discussed in Section 1.8, the NRC assumes that at-reactor ISFSIs are constructed onsite under a general or site-specific license during the term of reactor operations (including license renewal). NHPA Section 106 reviews are not conducted for construction of generally licensed ISFSIs, but have been and will continue to be performed for site-specific licensing actions (new reactor licensing, reactor license renewal, away-from-reactor ISFSIs, and specifically licensed at-reactor ISFSIs). In addition, as discussed in Section 3.11, less-developed or disturbed portions of a power plant site, including areas used to support construction of an at-reactor ISFSI (e.g., construction laydown areas), could still contain unknown historic and cultural resources.

As discussed in more detail below, the NRC recognizes that there is uncertainty associated with the degree of prior disturbance and the resources, if any, present in areas where future ground-disturbing activities (e.g., initial and replacement DTS and replacement ISFSI) could occur. The NRC cannot eliminate the possibility that historic and cultural resources would be affected by construction activities during the long-term and indefinite timeframes because the initial ISFSI could be located within a less-disturbed area with historic and cultural resources in close proximity. Further, resources may be present that would not have been considered significant at the time the initial or replacement facilities were constructed, but could become significant in the future. For example, an existing nuclear power plant could, in the future, be considered a significant historic and cultural resource if its design represents a major advancement in power plant technology.

4.12.1 Short-Term Storage

During the short-term storage timeframe, the spent fuel pool would remain in operation until the transfer of the spent fuel from the pool to an at-reactor ISFSI. As discussed in Section 3.11, ground-disturbing activities occurred during initial nuclear power plant construction, and much of

the land within and immediately surrounding the power block was extensively disturbed. This activity would have eliminated any potential for historic and cultural resources to be present in these portions of the power plant site (i.e., power block). Continued operations and maintenance activities associated with spent fuel pools would not affect historic and cultural resources because spent fuel pools are located in the fuel building within the power block and most resources would have been removed during initial plant construction.

As discussed in Section 3.11, less-developed or disturbed portions of a power plant site, including the areas that were used to support construction of the at-reactor ISFSI, could contain historic and cultural resources. For purposes of evaluating the impacts of continued storage in this GEIS, the NRC assumes that at-reactor ISFSIs are constructed during the period of reactor operations. Impacts associated with construction of an at-reactor ISFSI have already occurred and are not considered in the short-term storage timeframe. If ground-disturbing activities occur as a result of continued operations or maintenance, impacts could be mitigated if the licensee has previously identified historic and cultural resources and has management plans and protective procedures in place. Routine maintenance and continued operations of an at-reactor ISFSI are not expected to affect historic and cultural resources because no ground-disturbing activities are anticipated. However, if ground-disturbing activities occur as a result of continued operations or maintenance, impacts could be mitigated if the licensee has previously identified historic and cultural resources and has management plans and protective procedures in place.

Because no ground-disturbing activities are anticipated during the short-term storage timeframe, there would be no impacts on historic and cultural resources. Therefore, impacts associated with continued operations and maintenance of the spent fuel pool and the at-reactor ISFSI on historic and cultural resources during the short-term timeframe would be SMALL.

4.12.2 Long-Term Storage

During the long-term timeframe, in addition to routine maintenance and monitoring, the NRC assumes that an at-reactor ISFSI will be replaced, which will require the construction and operation of a DTS. Further, the NRC assumes that the DTS is replaced once during the long-term timeframe.

Impacts from continued operations and routine maintenance of the at-reactor ISFSI and DTS during long-term storage would be similar to those described in the short-term storage timeframe. The impacts would be small because there would be no ground-disturbing activities as a result of the continued operations and routine maintenance.

NRC authorization to construct a DTS and replace a specifically licensed at-reactor ISFSI and DTS would constitute Federal actions under NEPA, would be undertakings under the NHPA, and would require a site-specific environmental review and compliance with NHPA requirements

before making a decision on the licensing action. In accordance with 36 CFR Part 800, a Section 106 review would be conducted for each undertaking to determine whether historic properties are present in the area of potential effect, and if so, whether these actions would result in any adverse effects on these properties. License applicants are required to provide historic and cultural resource information in their Environmental Reports. To prepare these assessments, applicants conduct cultural resource surveys of any areas of proposed development to identify and record historic and cultural resources. Impacts on historic and cultural resources would vary depending on what resources are present. Resolution of adverse effects, if any, should be concluded prior to the closure of the Section 106 process. For generally licensed ISFSIs, impacts could be avoided, minimized, or mitigated if the licensee has management plans or procedures that require consideration of these resources prior to engaging in ground-disturbing activities.

The NRC assumes that the replacement at-reactor ISFSI and initial and replacement DTS will be constructed on land near the existing facilities. As discussed in Section 3.11, ground-disturbing activities occurred during initial nuclear power plant construction, and much of the land within and immediately surrounding the power block was extensively disturbed. If replacement of the at-reactor ISFSI and placement of initial and replacement DTS occur within the power block, then impacts would likely be small because initial construction of the nuclear power plant would have eliminated any potential for historic and cultural resources to be present. However, ISFSIs are currently located outside the power block. If the replacement ISFSI and initial and replacement DTS are sited within previously disturbed areas, then impacts would likely be SMALL because initial construction of the ISFSI could have reduced the potential for historic and cultural resources to be present. However, if these facilities are located in less-developed or disturbed portions of a power plant site outside of the power block with historic and cultural resources present, including areas that were used to support construction of the at-reactor ISFSI, then there could be impacts to historic and cultural resources.

Given the minimal size of the replacement ISFSI and initial and replacement DTS, and the large land areas at nuclear power plant sites, licensees should be able to locate these facilities away from historic and cultural resources. However, the NRC recognizes that it may not be possible for a licensee to avoid adverse effects on historic properties under NHPA or impacts on historic and cultural resources under NEPA. As discussed previously, existing at-reactor ISFSIs were constructed outside of the power block in less-developed or disturbed areas; thus, undiscovered historic and cultural resources could be present. The NRC believes that it is reasonable to assume that the replacement ISFSI and the initial and replacement DTS would be constructed near existing facilities because licensees may have, through decommissioning activities, reduced the NRC-licensed area to a smaller area around ISFSIs, and licensees would already have characterized and selected initial ISFSI sites to meet NRC siting, safety, and security requirements. The NRC believes that it is reasonable to assume that licensees would generally

avoid siting and operating an ISFSI away from the existing licensed area or outside previously characterized areas. The magnitude of adverse effects on historic properties and impacts on historic and cultural resources during the long-term timeframe largely depends on where the facilities are sited, what resources are present, the extent of proposed land disturbance, whether the area has been previously surveyed to identify historic and cultural resources, and whether the licensee has management plans and procedures that are protective of historic and cultural resources. Even a small amount of ground disturbance (e.g., clearing and grading) could affect a small but significant resource. In most, but not all instances, placement of storage facilities on the site can be adjusted to minimize or avoid impacts on any historic and cultural resources in the area. Before these ground-disturbing activities occur, the site-specific environmental review and compliance with the NHPA process could identify historic properties and historic and cultural resources that could be impacted. Under the NHPA, mitigation does not eliminate a finding of adverse effect on historic properties; but, impacts would be assessed at the time of the future licensing action.

Based upon the considerations above, the potential impacts to historic and cultural resources during the long-term timeframe would range from SMALL to LARGE. This range takes into consideration routine maintenance and monitoring (i.e., no ground-disturbing activities), the absence or avoidance of historic and cultural resources, and potential ground-disturbing activities that could impact historic and cultural resources. In addition, the analysis considers uncertainties inherent in analyzing this resource area over long timeframes. These uncertainties include any future discovery of previously unknown historic and cultural resources; resources that gain significance within the vicinity and the viewshed (e.g., nomination of a historic district) due to improvements in knowledge, technology, and excavation techniques; and changes associated with predicting resources that future generations will consider significant. Potential adverse effects on historic properties or impacts on historic and cultural resources could be minimized through the development of agreements, license conditions, and implementation of the licensees' historic and cultural resource management plans and procedures to protect known historic and cultural resources and address inadvertent discoveries during construction of the replacement at-reactor ISFSI and initial and replacement DTS. If construction of a DTS and replacement of the ISFSI and DTS occurs in an area with no historic or cultural resources present or construction occurs in a previously disturbed area that allows avoidance of historic and cultural resources then impacts would be SMALL. By contrast, a MODERATE or LARGE impact could result if historic and cultural resources are present at a site and, because they cannot be avoided, are impacted by ground-disturbing activities during the long-term timeframe. Accordingly, the NRC has concluded that the impacts on historic and cultural resources for the long-term timeframe would be SMALL to LARGE.

4.12.3 Indefinite Storage

This section describes the potential environmental impacts on historic and cultural resources if a repository is not available to accept spent fuel. For this analysis, the NRC assumes that spent fuel would continue to be stored onsite indefinitely. During this timeframe, maintenance and monitoring would continue and the at-reactor ISFSI and DTS would be replaced every 100 years. The NRC assumes that the replacement of the at-reactor ISFSI and DTS would be constructed on land near existing facilities. As stated in Section 1.8, the NRC assumes that the land where the original facilities were constructed would be available for replacement facility construction; however, the NRC cannot eliminate the possibility that historic and cultural resources would be affected by construction activities during the indefinite timeframe because the initial ISFSI could be located within a less-disturbed area with historic and cultural resources in close proximity. Further, resources may be present that would not have been considered significant at the time the initial or replacement facilities were constructed, but could become significant in the future. Impacts regarding the replacement of the ISFSI and DTS would be similar to those described in the long-term storage timeframe.

Based upon the considerations above, the potential impacts to historic and cultural resources during the indefinite storage timeframe would range from SMALL to LARGE. This range takes into consideration routine maintenance and monitoring (i.e., no ground-disturbing activities), the absence or avoidance of historic and cultural resources, and potential ground-disturbing activities that could impact historic and cultural resources. In addition, the analysis considers uncertainties inherent in analyzing this resource area over long timeframes. These uncertainties include any future discovery of previously unknown historic and cultural resources; resources that gain significance within the vicinity and the viewshed (e.g., nomination of a historic district) due to improvements in knowledge, technology, and excavation techniques or changes associated with predicting resources that future generations will consider significant. Potential adverse effects on historic properties or impacts on historic and cultural resources could be minimized through development of agreements, license conditions, and the implementation of the licensees' historic and cultural resource management plans and procedures to protect known historic and cultural resources and address inadvertent discoveries during construction of the replacement at-reactor ISFSI and replacement DTS. If construction of a DTS and replacement of the ISFSI and DTS occurs in an area with no historic or cultural resource present or construction occurs in previously a disturbed area that allows avoidance of historic and cultural resources then impacts would be SMALL. By contrast, a MODERATE or LARGE impact could result if historic and cultural resources are present at a site and, because they cannot be avoided, are impacted by ground-disturbing activities during the indefinite timeframe. Accordingly, the NRC has concluded that the impacts on historic and cultural resources for the indefinite timeframe would be SMALL to LARGE.

4.13 Noise

This section describes potential noise impacts caused by the continued storage of spent fuel in spent fuel pools and at-reactor ISFSIs.

4.13.1 Short-Term Storage

During short-term storage, spent fuel pool systems would remain in operation to ensure adequate cooling prior to the transfer of spent fuel from the pools to an at-reactor ISFSI. Most noise would be generated when spent fuel is transferred from the spent fuel pool to the ISFSI. Once reactor operations cease, there would be less noise generated because some of the noise-generating equipment and activities would either cease or operate at lower levels. Therefore, short-term storage noise levels would be less than reactor operation noise levels.

The License Renewal GEIS (NRC 2013a) analyzed the environmental impacts associated with continued reactor operations during the license term of a nuclear power plant. Facility noise levels at operating reactor sites may sometimes exceed 55 dB(A) over a 24-hour period, which is the threshold EPA identified to protect residential areas against excess noise during outdoor activities (NRC 2013a; EPA 1974). As discussed in Section 3.12, the primary factors that influence impact magnitude are the noise level of the source and the proximity of the source to the receptor. Proximity matters because noise levels decrease as distance from the source increases. For point sources like stationary equipment, noise is reduced by about 6 dB(A) for each doubling of distance from the source, and for a line source, like a road, noise is reduced by 3 dB(A) per doubling of the distance (Washington State Department of Transportation 2014). As stated in the License Renewal GEIS (NRC 2013a), in most cases, the sources of noise are far enough away from sensitive receptors that the noise is attenuated to nearly ambient levels and is scarcely noticeable. However, in some cases noise from reactor operations can be detected relatively close to the site boundary and create a minor nuisance.

As described earlier in this section, noise levels would be lower once reactor operations cease. Noise sources associated with spent fuel pool storage include water cooling-system equipment, spent fuel-handling equipment, and in some cases vehicles to transport spent fuel from pools to dry cask storage pads. Some of the noise from equipment associated with spent fuel pool storage is attenuated because the activities occur inside a building, which functions as a noise barrier. Spent fuel handling and transfer would be infrequent, so the noise generated from these activities would also occur infrequently. Typically, pool storage sites produce no noise impacts on the local environment (NRC 2004c).

As described in Section 3.12, spent fuel casks resting on concrete pads are essentially passive, without any sources generating noise. Noise from routine maintenance and monitoring as well as from ancillary activities such as operation of the administration buildings would be minimal.

Even in rare cases where an independently operating spent fuel pool causes noise impacts that exceed the EPA-recommended threshold for outdoor noise, licensees are usually able to make engineering changes to address the problem. For example, at the Maine Yankee nuclear power plant the licensee set up the pool storage operations to operate independently from the reactor, which was being decommissioned. The fans used as part of the spent pool cooling-system generated noise levels up to 107 dB, which attenuated to 50 dB less than 1.6 km (1 mi) away (NRC 2002b). This noise level exceeded the 55 dB(A) threshold recommended by the EPA for protection against outdoor activity interference and annoyance. Nearby residents complained to the plant staff about the noise level, and the licensee made engineering changes to the fans that were causing the noise and the issue was resolved.

In conclusion, the operation noise levels, duration, and distance between the noise sources and receptors generally do not produce noise impacts noticeable to the surrounding community. In certain cases, such as the Maine Yankee spent fuel pool island, potential noise impacts on receptors closest to the site property line can experience unmitigated noise levels that exceed EPA-recommended noise levels. However, noticeable noise levels are generally not expected and would be limited to the nearest receptors. Therefore, the NRC concludes that the overall impact from noise during short-term storage would be SMALL.

4.13.2 Long-Term Storage

In addition to routine maintenance and monitoring, the NRC assumes that long-term storage would include the construction, operation, and replacement of a DTS and the replacement of the ISFSI. Construction of a DTS would generate higher noise levels than DTS operations. The NRC assumes that DTS construction would take 1–2 years. Construction equipment would be used to grade and level the site, excavate the facility foundation, handle building materials, and build the facility. Construction equipment generates noise levels over 90 dB(A) (at a reference distance of 15 m [50 ft] from the source) (NRC 2002b). At distances greater than about 1.6 km (1 mi), expected maximum noise levels from construction equipment would be reduced to about 55 dB(A), which is the EPA-recommended level for protection in residential areas against outdoor activity interference and annoyance (NRC 2002b).

During operation of the DTS, some activities would be conducted inside the building, which functions as a noise barrier. Spent fuel transfer between the storage pad and the DTS would be infrequent. The NRC expects noise levels from this transfer of spent fuel to be no more than the noise level generated transferring spent fuel from the pool to the dry pad, as described in Section 4.13.1. In addition, some of the reactor and spent fuel pool storage noise sources present during short-term storage (such as the cooling towers and associated equipment) would not be present during long-term storage.

The NRC assumes that the at-reactor ISFSI (i.e., concrete storage casks and pads) and the DTS would be replaced within the 100-year timeframe. Similar to the DTS construction, ISFSI and DTS replacement uses construction equipment, which can generate noise levels over

90 dB(A). The noise levels exceed the EPA-recommended level for protection against outdoor activity interference and annoyance (NRC 2002b). However, distance from the source will eventually reduce the noise level to below the EPA-recommended level for protection against outdoor activity interference and annoyance.

Construction and replacement of the DTS, although temporary and representing a small portion of the overall long-term storage timeframe, would generate noise levels that exceed EPA-recommended noise levels. Operational noise levels would not produce noise impacts noticeable to the surrounding community. For some activities (e.g., replacement of the DTS and ISFSI facilities), potential noise impacts on receptors closest to the site property line can experience unmitigated noise levels that exceed EPA-recommended noise levels. However, these activities are temporary and noticeable noise levels would be limited to the nearest receptors. Therefore, the NRC concludes that the overall impact from noise during long-term storage would be SMALL.

4.13.3 Indefinite Storage

This section describes the noise impacts in the event a repository is not available to accept spent fuel and the spent fuel must be stored indefinitely in ISFSIs. Impacts from indefinite storage would be similar to those described for the long-term storage timeframe. The NRC does not anticipate that indefinite storage in an ISFSI would generate any new or additional noise in comparison with the noise impacts described for the long-term storage timeframe. Therefore, the NRC concludes that the overall impact from noise during indefinite storage would be SMALL.

4.14 Aesthetics

This section describes potential impacts on aesthetic resources caused by continued storage of spent fuel in spent fuel pools and at-reactor ISFSIs.

4.14.1 Short-Term Storage

No changes to nuclear power plant structures will be required for continued operation of the spent fuel pool during continued storage, including routine maintenance and monitoring.

In the License Renewal GEIS, the NRC determined that the aesthetic impacts associated with continued operation of a nuclear power plant, which included the continued operation of the spent fuel pool, were SMALL because the existing visual profiles of nuclear power plants were not expected to change during the license renewal term (NRC 2013a). Therefore, the NRC concludes that the potential impacts from the short-term continued operation of the spent fuel pool would be of minor significance to aesthetic resources.

For at-reactor ISFSIs, NRC evaluations of existing ISFSIs have found the aesthetic impacts to be SMALL. For example, the NRC found that continued operation of the Calvert Cliffs ISFSI would have a SMALL impact on aesthetic resources in part because there would be no new construction at the facility (NRC 2012a). Similarly for Humboldt Bay, the NRC determined that the aesthetic impact would be minimal (NRC 2005a), because the Humboldt Bay ISFSI is an in-ground vault with a low visual profile. Given that the NRC assumes that all ISFSIs are constructed during the nuclear power reactor's licensed life for operation, the visual profile of at-reactor ISFSIs during short-term storage is expected to be the same after the permanent cessation of reactor operations. The NRC therefore believes that potential impacts from short-term continued storage in at-reactor ISFSIs would be of minor significance to aesthetic resources.

This assessment of visual impacts depends in part on the degree of public interest and concern about potential changes to the existing scenic quality. However, because no changes to the visual profile are likely to occur as a result of the continued operation and maintenance of the existing spent fuel pool and ISFSI, the NRC concludes that the impacts from short-term storage of spent fuel on aesthetics would be SMALL.

4.14.2 Long-Term Storage

As discussed in the previous section, routine maintenance is not expected to have an impact on aesthetic resources. The NRC assumes that a DTS would need to be constructed during the long-term storage timeframe. Construction and operation of a DTS would have limited impacts on aesthetic resources. A DTS (approximately 7.9 m × 5.5 m [26 ft × 18 ft] and about 14 m [47 ft] tall) is likely to have a larger visual profile than other ISFSI structures; however, it would not be expected to provide a significant visual contrast to the surrounding landscape. There would be temporarily adverse impacts on aesthetic resources during construction of the DTS, resulting from the presence and operation of the construction equipment used to build the facility. However, because a DTS is a relatively small facility (e.g., compared to a nuclear power plant) and many of the internal components of the facility would be prefabricated, the construction of a DTS would take less time and equipment to build, and it would have a minimal impact on aesthetic resources.

Replacement of the ISFSIs and DTSs within the 100-year timeframe would occur on land near existing facilities. The NRC assumes that the overall land disturbed, and hence the visual profile of the facility, would not increase because the old ISFSIs and DTSs would be demolished and the land reclaimed. Impacts on aesthetic resources would likely temporarily increase during the period of construction of the new facilities and demolition of the old, when the most visible features are likely to be equipment associated with cask handling. Aesthetic impacts from such equipment and its operation would be minimal.

Because continued operation of the ISFSI, construction and operation of the DTS, and replacement of the ISFSIs and DTSs would not significantly alter the landscape of an at-reactor ISFSI, the NRC concludes that the potential environmental impacts on aesthetic resources during long-term storage would be SMALL.

4.14.3 Indefinite Storage

If a repository is not available, current practices of using at-reactor ISFSIs are expected to continue indefinitely. At the end of each 100-year cycle, the previously reclaimed land would be used to construct the replacement ISFSIs and DTSs. The potential activities and their impacts would be the same as those described in Section 4.14.2 for long-term storage, but would continue to occur repeatedly. Therefore, the NRC concludes that the indefinite onsite storage of spent fuel would result in SMALL impacts on aesthetic resources.

4.15 Waste Management

This section describes potential environmental impacts from low-level radioactive waste (LLW), mixed waste, and nonradioactive waste management and disposal caused by the continued storage of spent fuel in spent fuel pools and at-reactor ISFSIs.

Section 3.14 identified the types of waste generated by continued storage of spent fuel, including LLW, mixed waste, hazardous waste, and nonradioactive, nonhazardous waste. The environmental impacts of hazardous waste and nonradioactive, nonhazardous waste are discussed together in this section as nonradioactive waste, unless otherwise noted.

Impacts from the transportation of waste are discussed in Section 4.16. The public and occupational health impacts associated with at-reactor radioactive waste-management activities at nuclear plants are addressed in Section 4.17.

4.15.1 Short-Term Storage

The impacts associated with the management and disposal of LLW, mixed waste, and nonradioactive waste during short-term continued storage are discussed in the following sections.

4.15.1.1 Low-Level Radioactive Waste

The continued operation of a spent fuel pool would generate minimal amounts of LLW such as wet wastes from processing and recycling contaminated liquids. In the License Renewal GEIS, the environmental impacts associated with the management, onsite storage, and disposal of LLW for an additional 20 years of operation were determined to be SMALL during normal reactor operation (NRC 2013a). The NRC concluded impacts from LLW would be SMALL

because of the regulatory controls in place, low public dose being achieved, and reasonable assurance that sufficient LLW disposal capacity will be made available when needed for facilities to be decommissioned.

The amount of LLW generated from the operation and maintenance of an at-reactor ISFSI during short-term storage is expected to be minimal. For example, in the Calvert Cliffs ISFSI renewal EA (NRC 2012a), the NRC determined that the impacts from waste management would be SMALL, mainly because of the small quantities of LLW being generated and the fact that those wastes would be handled and disposed of according to regulatory requirements.

Comprehensive regulatory controls, facilities, and procedures are in place at operating reactors to ensure that the LLW is properly handled and stored and that doses and exposure to the public and the environment are negligible at all plants (NRC 2013a). These same regulatory controls are expected to remain in effect during short-term continued storage of spent fuel.

Because short-term continued storage of spent fuel would generate much less LLW than an operating reactor and licensees would continue to implement Federal and State regulations and requirements for proper management and disposal of LLW, the NRC concludes that the environmental impact from the management and disposal of LLW would be SMALL for all waste-management facilities.

4.15.1.2 Mixed Waste

The amount of mixed waste generated from the operation and maintenance of the spent fuel pool and the ISFSI is expected to be minimal compared to that of an operating reactor. After reactor operations cease, most waste-generating activities, as described in Section 3.14, would also cease, except for those associated with continued storage.

In the License Renewal GEIS, the NRC determined that the radiological and nonradiological environmental impacts from the storage and disposal of mixed waste would be SMALL for all operating reactor sites (NRC 2013a) because of the small quantities generated and comprehensive regulatory controls in place to ensure that this waste is properly managed and that doses to the public and environment are negligible. In addition, as an example, the EIS for the Fermi Unit 3 combined license states that 0.416 m^3/yr (0.544 yd^3/yr) of mixed waste would be generated during operation. Because the amount of mixed waste generated during short-term continued storage would be less than the relatively small amount estimated for reactor license renewal, the impacts in the License Renewal GEIS would bound the impacts for mixed waste during continued storage.

Comprehensive regulatory controls, facilities, and procedures are expected to remain in place during short-term continued storage of spent fuel, which will ensure that mixed waste is properly managed so that exposure to the public and the environment are negligible at all storage sites.

Because short-term storage of spent fuel would generate much less mixed waste than an operating reactor and licensees would continue to implement Federal and State regulations regarding proper management and disposal of mixed waste, the NRC concludes that the environmental impacts from the management and disposal of mixed waste would be SMALL.

4.15.1.3 Nonradioactive Waste

The amount of nonradioactive waste generated from the operation and maintenance of an at-reactor ISFSI is expected to be minimal compared to that of an operating reactor. After reactor operations cease, most waste-generating activities would also cease, except for those associated with short-term storage.

The impacts associated with the storage and disposal of nonradioactive wastes at operating nuclear power plants were determined to be SMALL in the License Renewal GEIS (NRC 2013a), because although the quantities of waste generated are highly variable, they are generally less than amounts generated at other industrial facilities. After reactor operations cease, most waste-generating activities would also cease, except for those associated with continued storage. Because the amount of waste generated during short-term storage would be less than that estimated for reactor license renewal, the impacts in the License Renewal GEIS would bound the impacts for nonradioactive waste during short-term continued storage.

For example, in EISs for the licensing of new reactors (e.g., Fermi 3 and Lee), the impacts associated with the storage and disposal of nonradioactive waste, including hazardous waste, were determined to be SMALL, primarily because the wastes would be handled and disposed of according to County and State regulations (NRC 2013b,d).

The handling and disposal of hazardous wastes are regulated by the EPA or the responsible State agencies in accordance with the requirements of RCRA. Nonhazardous wastes are managed onsite and are generally disposed of in landfills permitted locally under RCRA Subtitle D regulations. Similar to LLW and mixed waste, nonradioactive waste would continue to be managed according to local, State, and Federal regulatory requirements.

Because short-term storage of spent fuel would generate less nonradioactive waste than an operating reactor, which was previously determined to have a SMALL impact, and licensees would continue to implement Federal and State regulations regarding proper management and disposal of nonradioactive waste, the NRC concludes that the environmental impact from the management and disposal of nonradioactive waste would be SMALL.

4.15.2 Long-Term Storage

Ongoing routine maintenance would continue to generate minimal amounts of waste. The NRC assumes that, during this long-term storage timeframe, a DTS would need to be constructed and operated. In addition, the DTS and ISFSI facilities (including casks and concrete pads) would need to be replaced.

4.15.2.1 Low-Level Radioactive Waste

Routine maintenance and monitoring of the ISFSI would continue to occur, which would generate minimal amounts of LLW. The NRC anticipates no LLW would be generated by onsite construction activities associated with the DTS.

During long-term storage, storage canisters will reach the end of their design life and require replacement. The replacement process will involve the transfer of spent fuel assemblies to new canisters and decontamination and disposal of the old canisters. The repackaging process is expected to generate types of dry wastes similar to those described for normal operations (e.g., clothing and tools) and radioactively contaminated storage canisters that would be handled and disposed of as LLW. Because storage canisters come into direct contact with spent fuel, it is possible that the metal components could become contaminated or activated and require disposal as LLW (EPRI 2010).

All spent fuel repackaging would be performed in the DTS. The repackaging process consists of removal of the spent fuel assemblies from the old canister and their placement into a new canister. For example, in the Calvert Cliffs ISFSI renewal EA (NRC 2012a), the NRC estimated that less than 0.06 m^3 (2 ft^3) per canister of LLW would be generated during cask loading and decontamination, based on a horizontal storage module design such as that described in Section 2.1.2.2. This LLW would consist of garments, tapes, and cloths, and would be processed by compaction. In addition, the old canister would require disposal. Because storage canisters come into direct contact with spent fuel for an extended period of time, it is assumed that the dry storage canister and any internal components have become activated or radioactively contaminated and require disposal as LLW (EPRI 2010). For example the NUHOMS 32P–S100 dry storage canister licensed for use at the Calvert Cliffs ISFSI has a compacted nominal volume of 1.3 m^3 (1.7 yd^3) (Transnuclear, Inc. 2004) that must be managed and disposed of as LLW. Repackaging and replacement of 150 canisters would generate approximately 1953 m^3 (255 yd^3) of compacted LLW.

In addition to repackaging the spent fuel during long-term storage, the ISFSI would need to be replaced. For purposes of this analysis, because the activities associated with the replacement and demolition of the ISFSI are similar to decommissioning activities, the quantities of LLW generated from the replacement of casks, horizontal storage modules, and concrete pads are expected to be similar to those considered in decommissioning funding plans provided to the NRC in accordance with 10 CFR 72.30(b). For example, many plans state that no LLW will be generated from demolition of ISFSI structures because the dry cask storage systems are designed to prevent leaks and the contained spent fuel does not generate sufficiently high levels of neutron radiation to activate materials used in construction of the systems. However some plans state that neutron activation is possible (Duke Energy 2013, Pacific Gas and Electric Company 2012) and could result in quantities of LLW generated during ISFSI decommissioning from about 72 to 265m^3 (94 to 346 yd^3).

Replacing the DTS during long-term storage timeframe would result in a small amount of LLW generated from removing contamination from the DTS. The primary source of contamination is spalled crud from spent fuel cladding. However, the spent fuel is enclosed by a transfer tube through most of the spent fuel transfer process. The transfer tube is the only piece of equipment that will not be decontaminated and thus will need to be disposed of as LLW. All other major equipment and structures of the DTS will be decontaminated. The volume of LLW is estimated by DOE to be 20-40 55-gallon drums, or about 4 to 8 m^3 (5 to 10 yd^3) (DOE 1996).

In summary, LLW is generated during the long-term timeframe during spent fuel repackaging operations, by unloading and loading operations, compaction of canisters removed from service, by replacement of storage casks, horizontal storage modules, and concrete pads, and by replacement of the DTS. Using the maximum values in the range described above, this volume of LLW is expected to be no more than about 480 m^3 (630 yd^3).

The NRC previously determined that waste generated during reactor decommissioning would have a SMALL impact (NRC 2013a) and waste generated during ISFSI license renewal would also have a SMALL impact (NRC 2012a). The amount of LLW generated by the replacement of the ISFSI and DTS would be a fraction of the estimated over 7,000 m^3 (over 9,000 yd^3) of LLW generated during reactor decommissioning (NRC 1996). Because waste generated during the long-term storage timeframe would be less than that generated during reactor decommissioning, the NRC expects that LLW generated during replacement of an ISFSI and DTS would be minimal.

Because LLW would continue to be managed according to Federal regulations and the disposal capacity for LLW is expected to be available when needed (see Section 1.8.3), the NRC determines the impacts from LLW management and disposal would be SMALL during long-term storage.

4.15.2.2 Mixed Waste

Routine maintenance and monitoring of the ISFSI would continue during long-term storage, and would generate minimal amounts of mixed waste. The repackaging of spent fuel, construction and operation of a DTS, and the replacement of the ISFSIs and DTSs are not expected to generate mixed waste. However, if mixed waste is generated, it would be a small fraction of that generated by an operating nuclear power plant and it would be managed according to regulatory requirements.

Due to the type of activities occurring during long-term storage that are expected to generate minimal to no mixed waste and because the quantity of mixed waste generated from the operation and replacement of the ISFSIs and DTSs is expected to be a small fraction of that generated during the licensed life of the reactor, the radiological and nonradiological environmental impacts associated with the management and disposal of mixed waste are expected to be SMALL during long-term storage.

4.15.2.3 Nonradioactive Waste

Routine maintenance and monitoring of the ISFSI would continue to generate minimal amounts of nonradioactive waste. The construction and operation of a DTS would be expected to generate nonradioactive nonhazardous waste similar to that generated during ISFSI construction (e.g., construction debris, packaging material, and worker trash, and small quantities of nonradioactive hazardous wastes like paint waste, solvents, pesticides, and cleaning supplies).

Repackaging of the canisters could generate some amount of nonradioactive waste if the waste were never contaminated. Replacing the DTS and ISFSI facilities (including casks and storage pads), would generate nonradioactive waste primarily nonhazardous waste. The noncontaminated portions of the storage modules, concrete pads, and DTS building would be demolished and disposed of as construction debris in a landfill.

Similar to LLW estimates, the amount of nonradioactive waste generated from cask and facility replacement is based on decommissioning estimates. However, specific quantities of nonradioactive waste are difficult to estimate because the amount of waste will depend on whether the materials were contaminated during storage.

Based on the NUHOMS cask design described in Section 2.1.2.2, a single storage module volume is 50 m^3 (65 yd^3) of concrete and steel. The amount of material would be similar for vertical storage cask designs, as described in Section 2.1.2.2. Some portion of this volume would likely be disposed of as LLW due to contamination, but the majority of the waste would be disposed of as nonradioactive waste. A 1-m (3-ft) thick ISFSI pad capable of supporting 150 NUHOMS horizontal storage modules, based on the example facility described in Section 2.1.2.2, would contain about 13,200 m^3 (17,300 yd^3) of concrete that would need to be demolished and disposed of as demolition debris. The amount of concrete would be similar for vertical storage cask designs, as described in Section 2.1.2.2.

The NRC estimated the volume of nonradioactive (primarily nonhazardous) waste from the replacement of the DTS using DTS component weights in Table 8.A.1-3 of the DTS Topical Safety Analysis Report (DOE 1996). The total weight of the DTS is estimated to be about 2,300,000 kg (5,000,000 lb), nearly all of which is reinforced concrete. This corresponds to about 860 m^3 (1,130 yd^3) of nonradioactive waste.

Routine maintenance, fuel repackaging, and construction and operation of the DTS and replacement of the DTS and ISFSI are expected to generate nonradioactive waste that would be handled in accordance with regulatory requirements and disposed of at an appropriately permitted disposal facility. Although a large amount of nonradioactive nonhazardous waste would be generated by the removal of the storage modules, storage pads and DTS

(approximately 22,000 m^3 [29,000 yd^3]), it would still be less than the amount of waste generated during reactor decommissioning (which NRC already determined would have a SMALL impact), and it would not likely have a noticeable impact on local or regional landfill capacity and operations. Therefore, the NRC determines that the environmental impact from the management and disposal of nonradioactive waste would also be SMALL during long-term storage.

4.15.3 Indefinite Storage

This section evaluates the potential environmental impacts from the management and disposal of LLW, mixed waste, and nonradioactive waste from the indefinite at-reactor storage of spent fuel. The waste-generating activities during this timeframe include the same activities discussed in for long-term storage but with the activities occurring every 100 years.

4.15.3.1 Low-Level Radioactive Waste

The activities associated with the management and disposal of LLW from indefinite at-reactor storage of spent fuel would be similar to those described for long-term storage. As stated in Section 1.8.3, it is expected that sufficient LLW disposal capacity will be made available when needed. Similar to long-term storage, the NRC concludes the management and disposal of LLW could result in SMALL environmental impacts during indefinite storage of spent fuel.

4.15.3.2 Mixed Waste

The activities associated with managing and disposing of mixed waste from the indefinite at-reactor storage of spent fuel after the licensed life for operations will be similar to those discussed for long-term storage. Because of the relatively small quantity of mixed waste generated from indefinite storage and licensee adherence to proper management and disposal regulations, the NRC concludes that the indefinite management of mixed wastes resulting from at-reactor storage of spent fuel would result in SMALL impacts.

4.15.3.3 Nonradioactive Waste

Although the activities associated with managing and disposing of nonradioactive waste from indefinite at-reactor storage will be similar to those discussed for long-term storage, the amount of nonradioactive waste being generated is difficult to accurately estimate over an indefinite timeframe. Therefore, the NRC concludes the management and disposal of nonradioactive waste could result in SMALL to MODERATE impacts, due to nonradioactive nonhazardous waste disposal capacity.

4.16 Transportation

This section describes potential transportation impacts caused by the continued at-reactor storage of spent fuel in spent fuel pools and ISFSIs.

The potential impacts from transportation activities include fugitive dust emissions, increased traffic on local roads, worker and public exposure to radiation, and accident risks. The potential impacts from transportation of spent fuel to a repository or to an away-from-reactor storage facility are not evaluated in this section. Activities and impacts associated with transportation of spent fuel to a repository would occur after continued storage and are addressed as cumulative impacts in Chapter 6. The transportation activities to move spent fuel to an away-from-reactor ISFSI during continued storage are addressed in Chapter 5. Air emissions are evaluated in Section 4.4. The generic analysis in this GEIS is supported by a survey of recent site-specific analyses that were completed by the NRC for new reactors. This transportation analysis considers the impacts of transportation activities during continued storage on the affected environment beyond the site boundary. The environmental impacts evaluated include the nonradiological impacts on regional traffic and accidents from worker commuting, supply shipments, and waste shipments and the public and worker radiological safety impacts from shipments of LLW generated by continued storage activities.

4.16.1 Short-Term Storage

Impacts on traffic from workers commuting to and from the power plant site during the short-term storage timeframe depend on the size of the workforce, the capacity of the local road network, traffic patterns, and the availability of alternate commuting routes to and from the facility. While workforce levels are expected to vary among continued storage facilities (including ISFSIs and spent fuel pools), the limited nature of storage operations relative to power plant operations and the low reported and estimated storage workforce size indicate that the workforce needed to support short-term storage would be much smaller than the power plant workforce. For example, an operational full-time workforce of fewer than 20 workers has been documented for wet storage (safe storage mode) at the GEH Morris ISFSI (NRC 2004c) and a 200-person workforce has been estimated for dry cask ISFSI fuel-transfer and loading operations at the Fort St. Vrain facility (NRC 1991d). For comparison, the operational workforce at nuclear power plants ranges from 600 to 2,400 permanent personnel (NRC 2013a) with an additional 1,000 or more temporary workers needed to support refueling operations (NRC 2011c). The environmental impact on traffic from renewal of operations of nuclear reactors was evaluated generically in the License Renewal GEIS (NRC 2013a), which concluded the impacts on traffic from commuting workers would be SMALL. Because at-reactor ISFSI and spent fuel pool operations represent a small proportion of the operations at any reactor site, the NRC concludes the traffic impacts of continuing the storage activities during the short-term timeframe would continue to be a fraction of the small traffic impacts realized during the period of reactor operations.

The operation of the at-reactor ISFSI and spent fuel pool would generate a small amount of LLW (e.g., used personal protection equipment and wastes related to pool–to-cask transfer activities) relative to power plant operations that would result in infrequent waste shipments to a licensed disposal facility. The Atomic Energy Commission (AEC 1972) estimated the annual amount of LLW generated from a typical 1,100-MW(e) operating light water reactor was 108 m^3 (141 yd^3), resulting in as many as 70 shipments of waste per year, assuming 0.05 m^3 (1.8 ft^3) per drum and 30 drums per truck. More recent estimates of annual LLW generated by power plants with higher power ratings are comparable (NRC 2011d) or as much as four times higher (NRC 2013d) than the previously reported 108 m^3 (141 yd^3) value but would represent, on average, less than one shipment per day. The small and infrequent number of shipments and compliance with NRC and U.S. Department of Transportation (DOT) packaging and transportation regulations would limit potential worker and public radiological and nonradiological impacts from these waste shipments. The radiological impacts on the public and workers of LLW shipments from a reactor have been previously evaluated by the NRC.

A generic impact determination in Table S–4 in 10 CFR 51.52 and supporting analysis (AEC 1972) conclude that the environmental impacts of the transportation of fuel and waste to and from a light water reactor under normal operations of transport and from accidents during transport would be SMALL. Subsequent analysis of LLW transportation impacts in *Final Environmental Statement on Transportation of Radioactive Material by Air and Other Modes* (NRC 1977) concluded transportation impacts are small. Additional site-specific analyses of transportation impacts for power plants that did not meet the conditions of 10 CFR 51.52 also concluded the transportation radiological impacts would be SMALL (NRC 2006b,c; 2008b; 2011a,d–f; 2013a). Because LLW waste-generating activities for continued storage would be a fraction of total power plant LLW-generating activities, the short-term storage LLW waste shipments would also result in a small fraction of the impacts realized for waste shipment during the period of reactor operations.

Based on the preceding analysis that describes the low volume of traffic and shipping activities associated with the continued storage of spent fuel in at-reactor ISFSIs and spent fuel pools, the NRC concludes the impacts on traffic and public and worker radiological and nonradiological safety from transportation activities would be SMALL during the short-term storage timeframe.

4.16.2 Long-Term Storage

As discussed in Section 1.8, the NRC assumes that the spent fuel would need to be repackaged during this timeframe, and that the ISFSI would be replaced. To facilitate the repackaging of the spent fuel, the NRC assumes that a DTS would be constructed.

The construction of a DTS would require a small temporary workforce relative to the power plant workforce. Because a DTS has not been constructed at any power plant site and construction information is limited, the NRC considered a previously reviewed proposal to construct a spent

fuel-transfer facility at the Idaho National Laboratory (NRC 2004a) that estimated a construction workforce of 250 workers for 2 years. Because the proposed Idaho transfer facility is larger (3.2 ha [8.0 ac], NRC 2004a) than the assumed DTS (0.04 ha [0.1 ac], Section 2.2.2.1), the Idaho facility bounds the impacts of constructing a DTS. For comparison, the operational workforce at nuclear power plants ranges from 600 to 2,400 permanent personnel (NRC 2013a) with an additional 1,000 or more temporary workers needed to support refueling operations (NRC 2011c). Based on this information, the NRC concludes that worker commuting traffic impacts associated with construction of a DTS during the long-term storage timeframe would be a small fraction of the power plant operations traffic impacts (described in Section 4.16.1 as small) and therefore the DTS construction traffic would also be small. Operation of the DTS would involve fewer workers than the construction workforce and therefore the commuting traffic impacts during the DTS operations period would also be minor. The remainder of activities during the long-term storage timeframe would be similar to activities and impacts, as evaluated in Section 4.16.1 (i.e., workers commuting and a small number of LLW shipments), and therefore transportation impacts would continue to be small.

The operation of the DTS would involve shipment of materials and generate a small amount of LLW (e.g., used canisters, decontamination swabs, air filters, and used personal protection equipment) (DOE 1996) that would result in infrequent waste shipments to a licensed disposal facility. Supply and waste shipments would be infrequent because transfer activities would occur over a long period of time. The small and infrequent number of LLW shipments and compliance with NRC and DOT packaging and transportation regulations would limit potential worker and public radiological and nonradiological impacts from waste shipments.

Continued repackaging activities and the replacement of the ISFSIs and DTSs would generate additional LLW and nonradiological waste that would need to be shipped offsite for disposal. Section 4.15.2.1 provides an estimate of 480 m^3 (630 yd^3) of LLW from the repackaging of canisters at a proposed ISFSI and replacement of the ISFSI and DTS. Because repackaging and replacement would occur as needed during the long-term storage timeframe, the LLW shipments would occur infrequently. Repackaging and replacement would generate about 22,000 m^3 (29,000 yd^3) of nonhazardous waste (Section 4.15.2.3). Assuming the nonhazardous waste from replacement is shipped in roll-off containers with a capacity of 15 m^3 (20 yd^3), the total number of truck shipments estimated is 1,450. If replacement were phased over a 5-year period, and shipping occurred 5 days per week, about one shipment per day would be needed. The activities would not significantly increase the magnitude of traffic generated by continued storage occurring each year.

The remainder of activities during the long-term storage timeframe would be similar to the activities and impacts evaluated in Section 4.16.1 (i.e., workers commuting and a small number of LLW shipments).

Due to the small workforce requirements for continued storage and aging management activities (relative to the power plant workforce) and the low frequency of supply shipments and shipments of LLW from DTS and ISFSI operations and replacement activities, the NRC concludes that impacts on traffic and public and worker radiological and nonradiological safety during the long-term storage timeframe would each be SMALL.

4.16.3 Indefinite Storage

Assuming no repository becomes available, spent fuel would be stored indefinitely in at-reactor ISFSIs. Annual transportation activities and associated environmental impacts would be similar to those analyzed for long-term storage operations and DTS construction and operations in Section 4.16.2, including continued aging management, repackaging, and replacement activities. In addition, because the impact analysis pertains to continued storage, the maximum inventory of spent fuel in storage at any reactor site would be the same as that evaluated in Section 4.16.1.

Because the NRC concluded in Section 4.16.2 that transportation impacts for continued storage and aging management activities would be SMALL, and no significant changes to the annual magnitude of traffic or waste shipments were identified in the preceding analysis of transportation activities assuming indefinite at-reactor storage, the NRC concludes that the transportation impacts during the indefinite storage timeframe would continue to be SMALL.

4.17 Public and Occupational Health

This section describes potential impacts on public and occupational health caused by the continued storage of spent fuel in spent fuel pools and at-reactor ISFSIs.

For the purposes of assessing radiological impacts, impacts are considered to be SMALL if releases and doses do not exceed dose standards in the NRC's regulations. This definition of SMALL applies to occupational doses as well as to doses to individual members of the public.

Transportation-related public and occupational health impacts are addressed in Section 4.16.

4.17.1 Short-Term Storage

Continued storage of spent fuel in spent fuel pools and ISFSIs is expected to continue in the same manner as during the licensed life for operation of a reactor. The License Renewal GEIS (NRC 2013a) describes a number of specific activities related to continued normal plant operations that result in impacts on public and occupational health. These include normal plant operation for power generation, the storage of spent fuel in fuel pools and ISFSIs, normal refueling, and other outages that include steam generator replacements. Overall, data and analyses presented in the License Renewal GEIS (NRC 2013a) provide ample evidence that

public and occupational doses at all commercial power plants are far below the dose limits in 10 CFR Part 20 and that the continuing efforts to maintain doses at as low as is reasonably achievable levels have been successful. Therefore, because continued storage represents a fraction of the activities occurring during reactor operations, the NRC expects that the public and occupational doses would continue to remain below the regulatory dose limits.

Spent fuel pool leaks can result in environmental impacts. As discussed in Section 4.8.1.1 and Appendix E, in the event that a leak from a spent fuel pool goes undetected and the resulting groundwater plume reaches the offsite environment, it is possible that the leak could be of sufficient magnitude and duration to contaminate a groundwater source above a regulatory limit (i.e., a maximum contaminant level for one or more radionuclides) and that public health impacts could be noticeable, but not destabilizing in such circumstances. As discussed in Appendix E, factors such as spent fuel pool design (stainless-steel liners and leakage-collection systems) and operational controls (monitoring and surveillance of spent fuel pool water levels), onsite and offsite ground water monitoring, make it unlikely that a leak of sufficient quantity and duration could occur without detection. In addition, should a spent fuel pool leak occur, the physical processes associated with radionuclide transport and hydrologic characteristics typical at spent fuel pool locations make it improbable that water leaked from the spent fuel pool would migrate offsite. Therefore, based on the low probability of a leak affecting offsite groundwater sources, the NRC concludes that impacts on public health resulting from a spent fuel pool leak during short-term timeframe would be SMALL.

The data presented in NUREG–0713, *Occupational Radiation Exposure at Commercial Nuclear Power Reactors and Other Facilities 2010* (NRC 2012b), as well as a number of ISFSI license renewal EAs (e.g., the Surry ISFSI [NRC 2005c] and Calvert Cliffs ISFSI [NRC 2012a]), provide ample evidence that the public and occupational radiological health impacts from the continued storage of spent fuel are a small fraction of the doses and impacts presented in the License Renewal GEIS (NRC 2013a) that include reactor operations. For example, NUREG–0713 (NRC 2012b) provides occupational exposure reporting from facilities that no longer have operating reactors, such as the Big Rock Point and Trojan ISFSIs. Both of these facilities had no measurable occupational exposure in the 2010 reporting period. The GEH Morris facility is a spent-fuel-pool-only ISFSI and has never had an operating reactor onsite. Its 2010 annual report indicates an average measured total effective dose equivalent of 0.34 mSv (34 mrem) in relation to the 10 CFR Part 20 occupational dose limit of 50 mSv (5,000 mrem).

The analyses presented in the License Renewal GEIS (NRC 2013a) and a number of ISFSI license renewal EAs (e.g., the Surry ISFSI [NRC 2005c] and Calvert Cliffs ISFSI [NRC 2012a]) provide evidence that annual public and occupational doses would be maintained below the annual dose limits established by 10 CFR Part 72 for the public and 10 CFR Part 20 for occupational personnel. In addition, a licensed storage facility would be required to maintain an as low as is reasonably achievable program, which would likely result in doses lower than those described in the License Renewal GEIS (NRC 2013a).

Nonradiological risks to occupational health and safety would include exposure to industrial hazards and hazardous materials. Industrial hazards are those typical of other industrial facility construction and operating hazards and include exposure to chemicals and accidents ranging from minor cuts to industrial machinery accidents. Preventative maintenance activities are conducted in accordance with Occupational Safety and Health Administration requirements and are infrequent and minor. Therefore, nonradiological occupational health impacts are considered to be minimal.

The NRC concludes that the impacts on public and occupational health due to continued storage of spent fuel would be SMALL during the short-term storage timeframe.

4.17.2 Long-Term Storage

In addition to the impacts considered above for short-term continued storage in an ISFSI, the NRC assumes that a DTS is constructed during the long-term storage timeframe. Risks to occupational health and safety during construction of the DTS would include exposure to industrial hazards, hazardous materials, and radioactive materials. Industrial hazards are those typical of other industrial facility construction and operating hazards and include exposure to chemicals and accidents ranging from minor cuts to industrial machinery accidents. Because construction activities are conducted in accordance with Occupational Safety and Health Administration requirements, nonradiological occupational health impacts are considered to be minor.

Once constructed, operation of the DTS would be very similar to the operations conducted at current reactor plant sites with licensed ISFSIs where spent fuel is loaded into dry storage cask systems and placed on an ISFSI pad. Analyses of ISFSI operations have been conducted in numerous EAs such as those for the Calvert Cliffs (NRC 2012a) and Oconee Nuclear Station (NRC 2009b) ISFSI renewals. These analyses and REMP reports provide ample evidence that public and occupational doses are being maintained well below the dose limits established by 10 CFR Part 72 for the public and 10 CFR Part 20 for occupational personnel. In addition, all NRC-licensed facilities are also required to operate using an as low as is reasonably achievable program to ensure radiation doses are maintained as low as is reasonably achievable.

Based on the reasons provided above, the NRC concludes that the impacts on public and occupational health during long-term storage would be SMALL.

4.17.3 Indefinite Storage

The public and occupational health impacts of continuing to store spent fuel without a repository would be similar to those described for long-term storage. The activities and associated human health impacts would remain the same. The main difference is that these activities would occur repeatedly.

The no repository scenario was analyzed in detail in the Yucca Mountain final EIS (FEIS) (DOE 2002) as the no-action alternative. The Yucca Mountain FEIS analyses looked at the short- and long-term impacts of continued storage of spent fuel and high-level radioactive waste at 72 commercial and 5 DOE sites for 10,000 years. The Yucca Mountain FEIS, in the analysis of the no-action alternative, assumes all commercial spent fuel would eventually be stored in dry configurations in ISFSIs at the existing locations. Detailed analyses were provided to demonstrate the expectation that maintenance, repairs, repackaging, operation, and construction at the storage facilities would be conducted in accordance with the requirements of the Occupational Safety and Health Administration and 10 CFR Parts 20 and 72, as discussed in the sections above. In addition, administrative controls and design features would minimize worker nonradioactive and radioactive exposures. The Yucca Mountain FEIS analyses and the discussion provided in Section 4.17.2 support the conclusion that public and occupational radiological health impacts could be maintained within the public and occupational dose limits of 10 CFR Parts 72 and 20. Therefore, the NRC concludes that the impacts on public and occupational health due to the indefinite storage of spent fuel in at-reactor ISFSIs would be SMALL.

4.18 Environmental Impacts of Postulated Accidents

This section describes the environmental impacts of postulated accidents involving the continued storage of spent fuel.

During continued storage, numerous features combine to reduce the risk associated with accidents involving spent fuel storage in spent fuel pools and ISFSIs. Safety features in the design, construction, and operation of nuclear power plants and ISFSIs, which are the first line of defense, are imposed to prevent the release of radioactive materials. Additional measures are designed to mitigate the consequences of failures in the first line of defense. These include the NRC's reactor site criteria in 10 CFR Part 100, "Reactor Site Criteria," which require the site to have certain characteristics that reduce the risk to the public and the potential impacts of an accident, and emergency preparedness plans and protective action measures for the site and environs. All these safety features, measures, and plans make up the defense-in-depth philosophy used by the NRC to protect the health and safety of the public and the environment (NRC 2013d).

Design Basis Events, Design Basis Accidents, and Severe Accidents

Design basis events are conditions of normal operation, design basis accidents, external events, and natural phenomena, for which the plant must be designed to ensure the capability to prevent or mitigate the consequences of accidents that could results in potential offsite exposures (NRC 2007b).

Design basis accidents are postulated accidents that are used to set design criteria and limits for the design and sizing of safety-related systems and components (NRC 2007b).

Severe accidents, or beyond-design-basis accidents, are accidents that may challenge safety systems at a level much higher than expected.

Consistent with the defense-in-depth philosophy, this section describes design basis events for which the strategy is to prevent or mitigate the consequences of accidents that could result in potential offsite doses. For some design basis events, such as tornadoes, this section describes how the storage facility is designed and built to withstand the event without loss of systems, structures, and components necessary to ensure public health and safety. In these cases, the environmental impacts are small because no release of radioactive material would occur. Other design basis events, such as spent fuel-handling accidents, are design basis accidents that licensees must assume could occur. In these cases, licensees must show how engineered safety features in the facility mitigate a postulated release of radioactive material. The environmental impacts of design basis accidents are small because all licensees must maintain engineered safety features that ensure that the NRC dose limits for these accidents are met. The basis for impact determinations for design basis events (i.e., whether the accident is prevented or mitigated) is described for each type of design basis event presented in this section.

Regulations governing accidents that must be addressed by nuclear power facilities, both operating and shutdown, are found in 10 CFR Parts 50, 52, and 100. The environmental impacts of design basis events, including those associated with the spent fuel pool, are evaluated during the initial licensing process. The ability of the plant to withstand these accidents is demonstrated to be acceptable before issuance of the operating license. The results of these evaluations are found in license documentation, such as the NRC's safety evaluation report, the final environmental impact statement, and in the licensee's Final Safety Analysis Report (FSAR) or equivalent. The licensee is required to maintain the acceptable design and performance criteria throughout the life of the plant, including during continued storage (NRC 2002b).

The consequences of a severe (or beyond-design-basis) accident, if one occurs, could be significant and destabilizing. The impact determinations for these accidents, however, are made with consideration of the low probability of these events. The environmental impact determination with respect to severe accidents, therefore, is based on the risk, which the NRC defines as the product of the probability and the consequences of an accident. This means that a high-consequence low-probability event, like a severe accident, could therefore result in a small impact determination, if the risk is sufficiently low.

This section of the GEIS follows a different format than the rest of the document. Because the accident risks for spent fuel pool storage only apply during the short-term timeframe and the accident risks for dry cask storage are substantially the same across the three timeframes, the GEIS presents the various accident types only once. The three storage timeframes (short-term, long-term, and indefinite, as described in Chapter 1) apply as follows:

- During short-term storage, both design basis and severe accidents are postulated for spent fuel stored in the onsite spent fuel pool and at-reactor ISFSI.

- For long-term and indefinite storage, the NRC assumes that the spent fuel is moved from the spent fuel pool to an at-reactor ISFSI. Therefore, only accidents involving an at-reactor ISFSI are possible during the long-term and indefinite storage timeframes.

4.18.1 Design Basis Events

During the continued storage of spent fuel, licensees maintain systems, structures, and components that ensure public health and safety. The hazards that are considered in the design and operation of storage facilities include failure of facility systems, structures, and components; man-made hazards, such as nearby military, industrial, and transportation facilities; and natural phenomena, such as earthquakes and floods.

4.18.1.1 Design Basis Events in Spent Fuel Pools

A number of postulated design basis events are considered in the design of spent fuel pools. Design features of spent fuel pools ensure prevention of inadvertent criticality and also ensure that the pool is designed to withstand hazards that could result in a significant loss of water. This section provides brief summaries of accidents involving spent fuel storage operations during the short-term storage timeframe.

Criticality Accidents

The presence of fissile nuclides in spent fuel requires that controls must be in place to prevent inadvertent nuclear chain reaction, or criticality, while spent fuel is in storage. NRC regulations in 10 CFR 50.68, “Criticality Accident Requirements,” and General Design Criterion 62, “Prevention of Criticality in Fuel Storage and Handling,” of Appendix A, “General Design Criteria for Nuclear Power Plants,” to 10 CFR Part 50 require that subcriticality in spent fuel pools be maintained. To comply with these requirements, licensees design and implement controls based on spent fuel pool nuclear criticality safety analyses. These controls include the use of neutron-absorbing material in spent fuel pool storage racks. The neutron-absorbing material’s physical properties, including its dimensions and boron-10 areal density, help maintain subcriticality. These nuclear criticality safety analyses are usually documented in the licensee’s FSAR and are the basis for demonstrating compliance with plant technical specifications, NRC regulations, and demonstrating adequate subcriticality for both normal operating conditions and design basis accidents.

Many licensees use integrated defense-in-depth design features to reduce the chance of a criticality accident if the neutron-absorbing material degrades. For example, some PWRs have received approval to take credit for the soluble boron in the spent fuel pool.

Licensees are required to demonstrate that some margin to criticality is maintained for a variety of abnormal conditions, including fuel-handling accidents involving a dropped fuel assembly. The environmental impacts are small, therefore, because criticality accidents in spent fuel pools are prevented.

Nearby Military, Industrial, and Transportation Facilities

Nuclear power plant licensees are required to assess hazards from nearby military, industrial, and transportation facilities to ensure that potential hazards in the site vicinity have been considered in the plant's design bases. If hazards are identified, such as overpressure from explosions from nearby industrial facilities, licensees are required to show that the probability is sufficiently low (an order of magnitude of 10^{-7}/yr or less) or that radiological dose criteria in 10 CFR 50.34(a)(1) are met. Since either the probability or the consequences must be acceptably small, the environmental risk of spent fuel pool releases caused by hazards from nearby military, industrial, and transportation facilities is small.

Postulated Fuel Assembly or Cask Drop

In accordance with NRC regulations in 10 CFR 50.34 and 52.79, a licensee must show that a plant site and mitigating engineered safety features are acceptable with respect to the consequences of postulated spent fuel cask drop accidents. Improper operation of the handling equipment (e.g., cranes), poor rigging practices, and equipment failures can lead to a drop of a cask or a fuel assembly into a spent fuel pool. Generally, the handling equipment is designed and constructed in accordance with the ASME NOG–1 Standard (ASME 2010) to be certified as single-failure-proof (any single failure will not drop the load).

A heavy load (e.g., cask) drop into the pool or onto the pool wall could affect the structural integrity of the fuel pool. An unlikely drop of a fuel assembly may cause mechanical damage to the fuel. Because a relatively small amount of mechanical damage to the fuel could cause significant radiation doses to facility personnel and releases to the environment, the spent fuel pool facility has radiation monitors and also provides confinement of radioactive material released from damaged fuel. The spent fuel pool facility is a controlled leakage building with a safety-grade filtration system in its ventilation system. This filtration system provides the necessary confinement to limit offsite dose consequences (NRC 2001).

The licensee provides the necessary plant description and analyses in its FSAR to demonstrate the safety of the spent fuel pool during the initial license application of the reactor to the NRC. The licensee also revises the plant description and accident analyses in the FSAR, as needed. As part of its continuing regulatory oversight of the plant, the NRC reviews the plant description and accident analyses during the initial licensing proceedings, as well as any subsequent revision to the FSAR.

In general, the NRC's accident dose review criterion for fuel-handling accidents at most plants, including cask drops, is 62.5 mSv (6.25 rem) total effective dose equivalent to an offsite individual (NRC 2000). This dose criterion must be met regardless of the probability of the design basis event.

Since the postulated fuel assembly or cask drop is among the design basis accidents analyzed by licensees, and licensees must show that radiation dose limits in 10 CFR 50.34(a)(1) will be met, the environmental consequences associated with this type of design basis accident during continued storage are small.

Natural Phenomena Hazards

Appendix A, "General Design Criteria for Nuclear Power Plants," to 10 CFR Part 50 requires that structures, systems, and components that are important to safety be designed to withstand the effects of natural phenomena, such as earthquakes, tornadoes, hurricanes, floods, tsunamis and seiches, without loss of capability to perform their safety functions. General Design Criterion 2 (of Appendix A, "General Design Criteria for Nuclear Power Plants," to 10 CFR Part 50) also requires that the design bases for these structures, systems, and components reflect (1) appropriate consideration of the most severe of the natural phenomena that have been historically reported for the site and surrounding area, with sufficient margin for the limited accuracy, quantity, and period of time in which the historical data have been accumulated; (2) appropriate combinations of the effects of normal and accident conditions with the effects of the natural phenomena; and (3) the importance of the safety functions to be performed.

General Design Criterion 4, "Environmental and Dynamic Effects Design Bases," also applies to spent fuel pool design as it relates to information on tornadoes that could generate missiles.

NRC siting regulations in 10 CFR Part 100, "Reactor Site Criteria," also require applicants to consider, among other things, physical characteristics of sites that are necessary for safety analysis or that may have an impact upon plant design (such as maximum probable wind speed and precipitation). Licensees and applicants are required to identify and characterize the physical characteristics of the site, so that they may be taken into consideration when determining the acceptability of the site. Appendix A of 10 CFR Part 100, "Seismic and Geologic Siting Criteria for Nuclear Power Plants," describes the nature of investigations required to obtain geologic and seismic data necessary to determine site suitability and to provide reasonable assurance that a nuclear power plant can be constructed and operated at a proposed site without undue risk to the health and safety of the public. Appendix A describes the procedures for determining the quantitative vibratory ground motion design basis at a site due to earthquakes and describes information needed to determine whether and to what extent a nuclear power plant needs to be designed to withstand the effects of surface faulting.

Each applicant for a construction permit for a power plant is required to investigate the site for all seismic and geological factors that may affect the design and operation of the plant to provide reasonable assurance that the plant can be constructed and operated without undue risk to health and safety of the public. These siting criteria also provide reasonable assurance that the spent fuel pool can be operated safely during the short-term storage timeframe.

Earthquakes

The NRC requires licensees to design, operate, and maintain safety-significant structures, systems, and components, including spent fuel pools, to withstand the effects of earthquakes and to maintain the capability to perform their intended safety functions. The agency ensures these requirements are satisfied through the licensing, reactor oversight, and enforcement processes (NRC 2011e). In 2005, the NRC began to assess the safety implications of increased nuclear power plant earthquake hazards identified for the central and eastern United States. The NRC identified the issue as Generic Issue 199 (GI–199) and completed a limited scope screening analysis in December 2007, which culminated in the issuance of a safety/risk assessment in August 2010 (NRC 2010). In the 2010 assessment, the NRC chose seismic core damage frequency as the appropriate risk metric to changes in the seismic hazard. For each power plant, the NRC estimated the change in seismic core damage frequency as a result of the updated seismic hazard. This analysis confirmed that operating nuclear power plants remain safe with no need for immediate action. The NRC took regulatory action after the March 2011 earthquake and tsunami in Japan. In March 2012, the NRC issued a request for information to all U.S. nuclear power plants asking licensees to (1) conduct walkdowns of their plants, including the spent fuel pools, to identify and address plant-specific vulnerabilities (through their corrective action programs) and verify the adequacies of monitoring and maintenance procedures; and (2) reevaluate the seismic hazards at the plants against present-day NRC requirements and guidance. These assessments may make use of new consensus seismic hazard estimates for the power plants in the central and eastern United States developed by the DOE, EPRI, and NRC (NRC 2012c). The NRC has issued guidance to complete these walkdowns and reevaluations and will take additional regulatory action, as necessary, in response to the findings.

Floods

As with earthquakes and other natural phenomena, the NRC requires licensees to design, operate, and maintain safety-significant structures, systems, and components, including the spent fuel pool, to withstand the effects of floods and to maintain the capability to perform their intended safety functions. The analysis to meet this requirement involves estimating a design basis flood, which is defined as a flood caused by one or an appropriate combination of several hydrometeorological, geoseimic, or structural-failure phenomena, which results in the most severe hazards to safety-significant structures, systems, and components (NRC 1976; Prasad et al. 2011). Based in part on the plant physical siting location and characteristics, the design

basis flood can include flooding on the site caused by local intense precipitation or local probable maximum precipitation, stream flooding, storm surges, seiches, tsunamis, seismically induced dam failures or breaches, flooding caused by landslides, the effects of ice formation in waterbodies, or some combination of these phenomena (NRC 2013a).

All safety-significant structures, systems, and components are required to be protected against the design basis flood by siting them above the highest flood water-surface elevation or providing adequate flooding protection. The NRC requires that this protection be achieved by using a dry site concept, external barriers, or incorporated barriers (NRC 1976). The dry site concept involves constructing the nuclear power plant above the design basis flood water-surface elevation using either the natural terrain or engineered fill. External barriers are engineered solutions that can include levees, seawalls or floodwalls, bulkheads, revetments, or breakwaters. Incorporated barriers are also engineered solutions that involve specially designed walls or penetration closures.

Given these physical siting and engineered factors, the environmental risk of spent fuel pool releases caused by design basis floods is small.

The NRC also took regulatory action after the March 2011 earthquake and tsunami at the Fukushima Dai-ichi nuclear power plant. In March 2012, the NRC issued a request for information to all U.S. nuclear power plants asking licensees to (1) conduct plant walkdowns (visual inspections) to identify and address plant-specific vulnerabilities (through their corrective action programs) and verify the adequacies of monitoring and maintenance procedures; and (2) reevaluate the flooding hazards at the plants against present-day NRC requirements and guidance to ensure that the plant is designed, operated, and maintained in such a manner that safety-significant structures, systems, and components, including the spent fuel pool, are able to withstand the effects of floods (NRC 2012d). The NRC has issued guidance to complete these walkdowns and reevaluations and will take additional regulatory action, as necessary, in response to the findings. The information collected in response to the request for information will also be applicable to resolution of GI–204, *Flooding of Nuclear Power Plant Sites Following Upstream Dam Failures* (NRC 2013e).

<u>High Winds (Tornadoes and Hurricanes)</u>

The NRC requires licensees to consider both sustained straight winds, such as those caused by hurricanes, and brief high rotational and translational winds that are caused by tornadoes in the design of safety-related structures. Because tornado wind speeds are generally higher than hurricane wind speeds, tornado winds tend to be the limiting consideration in design. The NRC's definition of a design basis tornado, originally published in 1974 in Regulatory Guide 1.76, describes design basis tornado characteristics in each of three regions of the United States (NRC 1974). The design basis tornado characteristics east of the eastern foothills of the Rocky Mountains included a maximum wind speed of 580 km/hr (360 mph).

The Pacific coastal region and Rocky Mountain region had design basis tornado characteristics that include a maximum wind speed of 480 km/hr (300 mph) and 390 km/hr (240 mph), respectively. Operating nuclear power plants in these regions that meet this guidance are designed to withstand these wind speeds. By comparison, few hurricanes have achieved wind speeds of 310 km/hr (190 mph) (Bender et al. 2010).

In 2007, the NRC updated its design basis tornado definition such that a maximum wind speed of 370 km/hr (230 mph) is appropriate for tornadoes for the central portion of the United States; a maximum wind speed of 320 km/hr (200 mph) is appropriate for a large region of the United States along the east coast, the northern border, and western Great Plains; and a maximum wind speed of 260 km/hr (160 mph) is appropriate for the western United States (NRC 2007c). Because design basis tornado windspeeds were decreased as a result of the analysis performed to update Regulatory Guide 1.76, it was no longer clear that the revised tornado design basis windspeeds would bound design basis hurricane windspeeds in all areas of the United States. As a result, in 2011 the NRC published new guidance for design basis hurricane and hurricane missiles for nuclear power plants (NRC 2011f). This guidance describes windspeeds and other hurricane characteristics acceptable to the staff for defining a design basis hurricane for new nuclear power plants. For example, under this new guidance, which would apply to new reactors, design basis 3-second gust windspeeds along the eastern Florida coast range from 370 km/hr (230 mph) to 470 km/hr (290 mph).

Given the required design bases for nuclear power plants, including spent fuel pool structures, only severe winds would cause damage to a PWR or a BWR spent fuel pool. Generally, the safety-related structures of a spent fuel pool facility (e.g., the pool wall) are designed to withstand the design basis wind and missiles; however, the facility superstructure and other systems may not be classified as safety-related and may sustain some damage from wind and wind-generated missiles. In 2001, the NRC estimated the annual frequency of catastrophic pool failure from an impact of a tornado-generated missile given a strike of a tornado having at least F4 intensity to be less than 10^{-9} (NRC 2001). The extremely low probability of tornado-induced accidents ensures that the environmental risk of spent fuel pool releases caused by design basis high winds is small.

Climate Change

As described above, NRC regulations in 10 CFR Parts 50, 52, and 100 require that spent fuel pools be designed to withstand the effects of natural phenomena. Climate change can influence the frequency and intensity of some natural phenomena. This section of the GEIS addresses the environmental impacts from climate change on the continued storage of spent fuel in spent fuel pools. The NRC acknowledges that climate change may have impacts across a wide variety of resource areas including air, water, ecological, and human health. The U.S. Global Change Research Program (GCRP) describes these potential impacts in the report *Climate Change Impacts in the United States* (GCRP 2014). However, in this GEIS, the

discussion of impacts from climate change on the environment will focus on those affecting the continued storage of spent fuel. The contribution of continued storage to greenhouse gas emissions and climate change are addressed in Sections 4.5 and 5.5.

Because spent fuel will only be stored in spent fuel pools during the short-term timeframe, the consideration of climate change impacts for pool storage only needs to address the short-term timeframe. Climate change can lead to an increased intensity and frequency of severe weather events (e.g., flooding, high winds from hurricanes and tornadoes, droughts, and increased temperatures in nearby surface waterbodies used as cooling-water supplies). As described previously in this section, the NRC requires licensees to design, operate, and maintain safety-significant structures, systems, and components to withstand the effects of floods and other natural phenomena and to maintain the capability to perform their intended safety functions. The agency ensures these requirements are satisfied through the licensing, oversight, and enforcement processes. The NRC's oversight authority over the licensed facilities will ensure that minimal impacts of natural hazards would be associated with climate change during short-term continued storage in spent fuel pools. As stated above, potential effects associated with climate change on the safety of spent fuel storage are flooding from storm surges and high winds caused by extreme weather events like hurricanes. Rise in sea level is controlled by complex processes, and it is projected to rise between 0.3 and 1.2 m (1 and 4 ft) by 2100 (GCRP 2014).[3] Based on this projected change, no U.S. nuclear power plant (operational or decommissioned) will be underwater solely because of sea level rise before 2100. In addition to sea-level rise, spent fuel facilities may be affected by increased storm surges, erosion, shoreline retreat, and inland flooding. Coastal area impacts may be exacerbated by land subsidence. Section 4.18.2 considers when climate change influences on natural phenomena (e.g., sea-level rise along with storm surge) contribute to flooding levels beyond the design basis. NRC-licensed spent fuel storage facilities are designed to be robust. They are evaluated to ensure that the performance of their safety systems, structures, and components is maintained during flooding events, and they are monitored when in use. The lowest grade above the sea level of concern for an NRC-licensed facility is currently about 4.3 m (14 ft) (75 FR 81037). In the event of climate change-induced sea-level rise, which would occur gradually over long periods of time, the NRC (see, e.g., 10 CFR Part 50, Appendix B, Section XVI, "Corrective Action") requires licensees to implement corrective actions to identify and correct or mitigate conditions adverse to safety. Further, as stated above, following the March 2011 accident at the Fukushima Dai-ichi nuclear power plant in Japan, licensees of operating nuclear power plants are reevaluating flood hazards using present-day regulations and regulatory guidance. When completed, these reevaluations will provide additional assurance that existing plant design bases reflect the current state of knowledge of flood hazards. In addition, the NRC will use the information

[3] The 2014 National Climate Assessment (GCRP 2014) also notes that in the context of risk-based analysis, some decision makers may wish to use a wider range of scenarios, from 0.2 m (8 in) to 2 m (6.6 ft) by 2100.

collected to determine whether further regulatory action is needed concerning flood hazard analysis and design basis.

Climate change can also lead to an increase in the frequency of droughts. Increasing temperatures have made droughts more severe and widespread. Trends in droughts vary regionally. Short-term (seasonal or shorter) droughts are expected to intensify in most U.S. regions, while longer-term droughts are expected to intensify in the Southwest, southern Great Plains, and Southeast (GCRP 2014). Except in a few areas where increases in summer precipitation are expected to compensate for drought effects, summer droughts are expected to intensify across the continental United States (GCRP 2014). Droughts can cause increased competition for limited water resources. Although some aspects of spent fuel storage require water, the amount of water needed is minimal and water use for spent fuel storage is not expected to cause water-use conflicts, even under the changed conditions that could be caused by climate change (see Sections 4.7, 4.8, 4.9, 5.7, 5.8, and 5.9).

Summary

The postulated design basis accidents considered in this GEIS for spent fuel pools include hazards from natural phenomena, such as earthquakes, flood, tornadoes, and hurricanes; hazards from activities in the nearby facilities; and fuel-handling-related accidents. In addition, the potential effects of climate change are also considered. Based on the above analysis, the environmental risk of these postulated accidents involving continued storage of spent fuel in pools is SMALL, because all important to safety structures, systems, and components involved with the fuel storage are designed to withstand these design basis accidents without compromising the safety functions. If climate change influences on natural phenomena create conditions adverse to safety, the NRC has sufficient time to require corrective actions to ensure spent fuel storage continues with minimal impacts.

4.18.1.2 Design Basis Events in Dry Cask Storage Systems

Design basis events are considered in the design of dry cask storage systems in accordance with NRC regulations in 10 CFR Part 72, “Licensing Requirements for the Independent Storage of Spent Nuclear Fuel, High-Level Radioactive Waste, and Reactor-Related Greater Than Class C Waste.” These requirements are applicable to dry cask storage systems for continued storage of spent fuel at all times, including the period of reactor operations, and all three continued storage timeframes (i.e., short-term, long-term, and indefinite storage).

In the safety analysis reports for specifically licensed dry cask storage facilities, each facility licensee examines four categories of design events as defined in American National Standards Institute (ANSI) standard ANSI/ANS–57.9 (1992), which include normal, off-normal, and accidental events. Design Events I represent those associated with normal operations of an ISFSI. These events are expected to occur regularly or frequently. Examples of normal events

include receipt, inspection, unloading, maintenance, and loading of a transportation package; transfer of loaded storage casks to the storage pads; and handling of radioactive waste generated as part of the operation. The impacts from these events are similar to those of normal operations at the ISFSI.

Design Events II represent those associated with off-normal operations that can be expected to occur with moderate frequency, approximately once per year. These events could result in members of the general public being exposed to additional levels of radiation beyond those associated with normal operations. Examples of these events include loss of external electrical power for a limited duration, off-normal ambient temperatures, a cask drop from less than the design allowable lift height, and off-normal transporter operation. Credible off-normal events or Design Events II rarely result in any occupational or offsite radiological consequences. During normal operations and off-normal conditions, the requirements of 10 CFR Part 20 must be met. In addition, the annual dose equivalent to any individual located beyond the controlled area must not exceed 0.25 mSv (25 mrem) to the whole body, 0.75 mSv (75 mrem) to the thyroid, and 0.25 mSv (25 mrem) to any other organ.

Design Events III represent infrequent events that could be reasonably expected to occur over the lifetime of the dry cask storage facility, while Design Events IV represent extremely unlikely events or design basis accidents that are postulated to occur because they establish the conservative design basis for systems, structures, and components important to safety. Design Events III and IV include more severe events, such as earthquakes, tornadoes and missiles generated by natural phenomena, floods, fire (including wildfires) and explosions, lightning, accidents at nearby sites (facilities), aircraft crashes, canister leakage under hypothetical accident conditions, storage cask drop or tip-over, and loss of shielding. The dose from any credible design basis accident to any individual located at or beyond the nearest boundary of the controlled area may not exceed that specified in 10 CFR 72.106; specifically, the more limiting total effective dose equivalent of 0.05 Sv (5 rem) or the sum of deep dose equivalent to and the committed dose equivalent to any individual organ or tissue (other than eye lens) of 0.05 Sv (50 rem); a lens dose equivalent of 0.15 Sv (15 rem); and a shallow dose equivalent to skin or any extremity of 0.5 Sv (50 rem).

The NRC assumes a DTS, or a facility with equivalent capabilities, will be needed to enable retrieval of spent fuel for inspection or repackaging as the duration and quantity of fuel in dry storage increases. A DTS would provide repackaging capability at all dry storage sites without the need to return to a pool and contingency by enabling repackaging at ISFSI-only sites. A DTS would allow onsite transfer of bare fuel assemblies from a source cask to a receiving cask (Christensen et al. 2000). The source cask can be a storage cask or a transfer cask. Confinement and shielding during fuel-transfer operations are provided by the concrete and steel structure. The facility has several subsystems including one used to transfer the fuel assemblies.

Two accidents considered in the Topical Safety Analysis Report for the reference DTS (DOE 1996) are representative of the types of accidents that could result in environmental impacts. These accidents involve a stuck fuel assembly and a loss-of-confinement event.

A fuel assembly in a reference DTS can become stuck while being retrieved from a cask or while being inserted into a cask for repackaging. Both of these scenarios can increase the dose at the site boundary because of increased time of operation, and they represent the bounding accidents. The design of the fuel-handling machine would have several safety features to make these scenarios unlikely.

Licensees of a reference DTS would be required to incorporate special recovery procedures in the facilities operational plan to free the stuck assembly, including use of special equipment through the penetrations in the wall with full viewing capabilities provided by closed-circuit television cameras. A fuel assembly may be stuck part-way out because a foreign object is between the assembly and the fuel cell or because of protrusions inside the cask. The situation could be detected because loads recorded by the fuel-assembly load cell would be abnormal and appropriate actions could be taken. There would not be any time limit to complete the recovery operations because the assembly would be shielded. A special “recovery” cask may be needed if the assembly is significantly distorted. The dose from these bounding scenarios was estimated to be 0.47 mSv (47 mrem) at a distance of 100 m (330 ft) from the DTS, assuming it would take 2 weeks to free the stuck fuel assembly.

In a loss-of-confinement event, TN-EPRI considered a scenario in which high-efficiency particulate air filters are inoperable while the receiving cask is open and filled with 21 fuel assemblies. The accident impact analysis is based on assuming that volatile radionuclides are released from damaged fuel, including up to 10 percent of the noble gases (except that up to 30 percent of the krypton-85 is released), tritium, and iodine-129. The total dose at 100 m (330 ft) is calculated to be 7.21 mSv (721 mrem).

Because the accident consequences would not exceed the NRC accident dose standard contained in 10 CFR 72.106, the environmental impact of the potential accidents would be SMALL.

Climate Change

The natural hazards that could be affected by climate change which are important to dry cask storage siting and design include flood and high-wind hazards. As described in Section 2.2, dry cask storage occurs during the short-term, long-term, and indefinite storage timeframes. Therefore, the analysis for dry cask storage would extend beyond the 60-year short-term timeframe considered in the spent fuel pool analysis. Projected future conditions include uncertainty.

The amount and rate of future climate change depends on current and future human-caused emissions (GCRP 2014). Quantitative expressions, such as the amount of sea-level rise identified in Section 4.18.1.1, may only extend to the end of the century. To whatever extent climate change alters the magnitude and frequency of natural phenomena during and beyond the short-term storage timeframe, the NRC's oversight authority over the licensed facilities is the mechanism that addresses the impact of natural hazards. Under current NRC regulations applicable to dry cask storage facilities, the NRC requires that the vendor or licensee include design parameters on the ability of the storage casks and spent fuel storage facilities to withstand severe weather conditions such as hurricanes, tornadoes, and floods. NRC-licensed spent fuel storage facilities are designed to be robust. They are evaluated to ensure that performance of their safety systems, structures, and components is maintained in response to natural phenomena hazards. In the event of impacts induced by climate change, such as sea-level rise, which occurs gradually over long periods of time, the NRC regulations (e.g., 10 CFR 72.172, "Corrective action") require licensees to implement corrective actions to identify and correct conditions adverse to safety.

Summary

In summary, the dry storage cask systems and any DTSs are designed to withstand the design basis accidents without losing safety functions. In addition, DTSs will have special recovery procedures in their operation plans to recover from these design basis accidents if they occur. If climate change influences on natural phenomena create conditions adverse to safety, the NRC has sufficient time to require corrective actions to ensure spent fuel storage continues with minimal impacts.

4.18.1.3 Conclusion

All NRC-licensed dry cask storage systems are designed to withstand all postulated design basis accidents (Design Events III and IV) with no loss of the safety functions. Licensees of DTSs will be required to design the facilities so that all safety-related structures, systems, and components can withstand the design basis accidents without compromising safety functions. In addition, the potential effects of climate changes are considered. Based on the assessment, the environmental impact of the design basis accidents is SMALL because safety-related structures, systems, and components are designed to function during and after these accidents.

4.18.2 Severe Accidents

This section describes severe accidents, or beyond-design-basis accidents, which are accidents that may challenge safety systems at a level higher than that for which they were designed, and assesses the environmental impact of severe accidents during continued storage. The probability and consequences of severe accidents are usually considered by the NRC in probabilistic risk assessments in which risk is determined by multiplying the probability of an

event times its consequences. The results of past studies for spent fuel pools and dry cask storage systems are summarized in the following sections.

4.18.2.1 Severe Accidents in Spent Fuel Pools

The NRC examined the risk of severe accidents in spent fuel storage pools in WASH–1400 (NRC 1975). WASH–1400 states that spent fuel pool accidents can arise from either loss of pool cooling, drainage of the pool, or drop of heavy objects into the pool. Subsequently, the NRC developed NUREG–1353 (NRC 1989), which examined several severe accidents that can affect a spent fuel storage pool, namely loss of cooling or makeup water, inadvertent draining of the pool, and structural failure of the pool due to missiles, aircraft crashes, heavy load (shipping cask) drop, and beyond-design-basis earthquakes. NUREG–1738 (NRC 2001) examined spent fuel pool accidents at decommissioning nuclear power plants. In addition to scenarios leading to fuel uncovery in a pool (fuel being uncovered, e.g., because of loss of cooling, loss of offsite power, heavy load drops, and fire), NUREG–1738 also examined the risk from seismic events, aircraft crashes, and tornadoes to a spent fuel pool. Assessments made in these studies are briefly discussed in the following sections.

Internal Events

In previous studies, the NRC considered a number of different types of equipment failure, or internal events that could lead to a severe accident in a spent fuel pool. For example, all spent fuel pools have a spent fuel pool cooling and cleanup system. This safety function of this system is intended to ensure that spent fuel remains cool and covered with water during all storage conditions. In addition to General Design Criterion 2, which is summarized above, pools are required to meet General Design Criterion 61 or equivalent principal design criteria;[4] General Design Criterion 61 states, among other things, that systems for fuel storage and handling shall be designed with residual heat removal capability to provide reliability and testability that reflects the importance to safety of decay heat, other residual heat removal, and prevention of significant reduction in fuel storage coolant inventory under accident conditions.

In general, this means that spent fuel pool cooling and cleanup systems are designed to satisfy either of two bases: (1) the cooling portion of the system is designed to seismic Category I (Regulatory Guide 1.29) (NRC 2007d), Quality Group C (Regulatory Guide 1.26) guidelines (NRC 2007e); or (2) the following systems are designed to seismic Category I, Quality Group C guidelines and are protected against tornadoes: the fuel pool makeup water system and its source; and the fuel pool building and its ventilation and filtration system. Licensees prevent a significant reduction in spent fuel pool coolant inventory by providing adequate makeup water

[4] U.S. facilities for which construction permits were issued before 1971 have plant-specific principal design criteria, because the Atomic Energy Commission (NRC predecessor) had yet to develop generic requirements for facility design criteria at that time.

capability and designing the spent fuel pool cooling and cleanup system so that the coolant can neither be drained nor siphoned below a specified level.

In NUREG–1738 (NRC 2001), the NRC concluded that the frequency of spent fuel uncovery resulting from loss of offsite power ranges from 1.1×10^{-7}/yr for power losses caused by severe weather to 2.9×10^{-8}/yr for plant-related and grid-related events. Lack of external power would cause cooling systems to fail, resulting in elevated pool water temperatures and accelerated evaporation of the pool water. In the event of even a long-term loss of normal pool makeup water capability at U.S. power plants, measures that were installed in response to the September 11, 2001 terrorist attacks, plus additional measures that are required as a result of the post-Fukushima March 12, 2012, mitigating strategies order, would ensure additional defense-in-depth protection for cooling of the spent fuel. Therefore, the environmental risk of spent fuel pool releases caused by loss of offsite power is considered to be small.

A discussion of a postulated spent fuel pool fire resulting from loss of pool water, a severe accident in a spent fuel pool, is provided in Appendix F. Appendix F describes the NRC's finding that the probability-weighted consequences of atmospheric releases, fallout onto open bodies of water, and societal and economic impacts of spent fuel pool fires are SMALL.

External Events

In previous studies, the NRC considered how different types of external events, such as tornadoes, aircraft crashes, and seismic events, could lead to a severe accident in a spent fuel pool. Each of these external events was evaluated to determine the frequency of spent fuel uncovery associated with the event. In NUREG–1738 (NRC 2001), the NRC determined that seismic events had higher fuel uncovery frequencies than aircraft crashes and tornadoes. For this reason, the seismic event is used in this GEIS as a representative external event causing a severe accident.

As discussed in Appendix F, numerous NRC studies have concluded that spent fuel pool structures are seismically robust and can withstand loads substantially beyond those for which they are designed (NRC 2001). During an earthquake, the walls and floor of the pool would carry the seismically induced hydrodynamic pressure from the pool water. Structural (floor, liner, or walls) failure could occur in a beyond-design-basis earthquake, if the magnitude of the event is significantly larger than that used in the design. If this occurred, water would rapidly drain out of the pool. Only a small amount of water would remain and the spent fuel would be uncovered and exposed to the air. A beyond-design-basis earthquake would also likely result in the loss of electrical power, which, in addition to any damage to pool superstructure, would cause a rise in fuel temperature due to loss of cooling. As discussed in Appendix F of this GEIS, if the spent fuel heats to a temperature on the order of 1,000°C (1,832°F), zirconium cladding on the spent fuel could ignite ("spent fuel pool zirconium fire"). Further, the spent fuel rod could burst due to high temperature, which could cause the collapse of the spent fuel itself.

Radioactive aerosols and vapors released from the damaged spent fuel could be carried into the surrounding environment. Based on the discussion in Appendix F, the frequency of fuel being uncovered is very small and is between 5.8×10^{-7} and 2.4×10^{-6}/yr depending upon the seismic hazard assessment.

Climate Change

In NUREG–1738 (NRC 2001), the NRC determined that the overall frequency of catastrophic failure caused by a tornado is extremely low (i.e., the calculated frequency of such as event is less than 10^{-9}/yr). The GCRP (2014) determined that trends in the intensity and frequency of tornadoes and thunderstorm winds are uncertain and are being studied intensively. Although research suggests future increases in the frequency of environmental conditions favorable to severe thunderstorms, the scarcity of high-quality data, and the fact that these phenomena are too small to be directly represented in climate models, makes it difficult to project how the character of severe thunderstorms and tornadoes might change in the future (GCRP 2014). Therefore, the NRC assumes that the risk posed by tornadoes will be comparable to the risk determined in the 2001 study through the short-term storage timeframe.

In its 2001 study, the NRC determined that the frequency of significant damage to spent fuel pool support systems from straight-line winds, such as those from hurricanes, is very low. The NRC also estimated that the fuel uncovery frequency for loss of offsite power caused by severe weather events was 1.1×10^{-7}/yr (NRC 2001). The Global Change Research Program determined that the United States and surrounding coastal waters may experience more intense hurricanes, but not necessarily an increase in the number of these storms that make landfall (GCRP 2014). An increase in the intensity of storms that make landfall as a result of climate change may increase the likelihood of both structural failures in buildings housing spent fuel pools and loss-of-offsite-power events. While the magnitude of the change in damage likelihood cannot be quantitatively predicted at this time, an increase in storm intensity is not expected to change the NRC's determination that the overall risk of external events on continued storage in spent fuel pools is small.

If climate change influences on sea-level rise create conditions adverse to safety, those changes would occur so slowly that the NRC has sufficient time to require licensees to implement corrective actions to identify and correct conditions adverse to safety. For example, the spent fuel could be transferred into dry casks and either relocated to higher elevation within the existing site or transported to a different site.

Summary

The NRC has examined the risk of severe accidents in spent fuel pools in several studies over the years. Based on these assessments, which include consideration of internal and external event initiators and climate change, the NRC concludes that the risk of severe accidents in spent fuel pools is small.

4.18.2.2 Severe Accidents in Dry Cask Storage Systems and DTSs

Both the NRC and EPRI have completed probabilistic risk assessments that consider risks to the public of severe accidents involving dry cask storage system operations. Both studies were generic in nature and considered a range of events that could result in sufficient damage to dry casks to cause radiological releases. The EPRI probabilistic risk assessment examined PWR spent fuel in bolted casks (EPRI 2004). The NRC probabilistic risk assessment examined BWR spent fuel in a canister-based dry cask storage system (NRC 2007f). The results of both studies were evaluated by the NRC's Advisory Committee on Nuclear Waste during its 172nd meeting on July 20, 2006 (NRC 2006d).

In NUREG–1864, *A Pilot Probabilistic Risk Assessment of Dry Cask Storage System at the Nuclear Power Plant*, the NRC analyzed various phases of the dry cask storage process from loading fuel from the spent fuel pool, preparing the cask for storage and transferring it outside the reactor building, moving the cask from the reactor building to the storage pad, and storing the cask for 20 years on the storage pad (NUREG 2007f). The study assessed a comprehensive list of initiating events, including dropping the cask during handling and external events during onsite storage (such as earthquakes, floods, high winds, lightning strikes, accidental aircraft crashes, and pipeline explosions). The study also modeled potential cask failures from mechanical and thermal loads. As shown in Table 18 of NUREG–1864, the largest conditional consequences to an individual person of postulated accidents are expected to range from 2.8 mSv (280 mrem), at a distance of less than 1.6 km (1 mi), up to 1.85 Sv (185 rem) at the same distance. For example, a postulated 5.8-m (19-ft) drop of a multipurpose canister while being lowered from the transfer cask to the storage cask would result in larger consequences. This drop can happen due to a design basis earthquake during canister handling operation and has the most severe consequence of potential drops. However, the probability of a release causing this dose consequence, which includes consideration of the initiating event frequency and conditional probability of release, given the event occurs, is about 3×10^{-5}/yr.

EPRI's 2004 study covered various phases of the dry cask storage process. Like the NRC study, the EPRI study considered a comprehensive list of initiating events, including dropping the cask during handling and events caused by severe natural phenomena. For average meteorological conditions, EPRI's estimates of the conditional downwind consequences from accidents to an individual person range from 0.00018 mSv (0.018 mrem) at a distance of 0.5 km

(0.3 mi) up to 0.194 Sv (19.4 rem) at a distance of 0.4 km (0.25 mi). The lowest consequences for events in which there could be any radiological release are associated with dropping a cask. The highest consequences are associated with an impact to the cask followed by a fire, such as could occur after an impact of an aircraft. The probability of each type of event considered by EPRI is less than 5.3×10^{-6}/yr.

Therefore, although the consequences would exceed NRC public dose standards contained in 10 CFR Part 20 (e.g., 100-mrem/yr dose limits for members of the public), the likelihood of the event is very low. Therefore, the environmental risk of an accident is SMALL.

The use of a DTS for the purposes of this continued storage environmental analysis represents a reasonable assumption for how future licensees are likely to repackage spent fuel, should repackaging activities become necessary during continued storage. However, the NRC has not received an application to construct and operate a DTS and, therefore, has not analyzed the environmental impacts of severe accidents at a DTS. As described in Section 2.1.4, the DOE prepared, and NRC reviewed, a topical safety analysis report for a conceptual design of a DTS. DOE's topical safety analysis report includes some of the types of information and analyses required to license a DTS, some of which is provided in this GEIS to describe the environmental impacts of constructing, operating, and replacing a DTS. DOE's analysis in the topical safety analysis report did not include consideration of severe accidents. However, the NRC's overall requirements for licensing spent fuel storage facilities under 10 CFR Part 72 ensure that the risk of severe accidents at a DTS would be small. Although the NRC has not analyzed the environmental impacts of severe accidents at a DTS, given that the amount of spent fuel being handled in a DTS is limited to the contents of a single dry cask, the consequences described above for cask drops provide some insight into the consequences of severe accidents at a DTS. Because compliance with NRC regulations for spent fuel handling and storage would likely make the risk of severe accidents at a DTS small, and the consequences of any severe accident at a DTS would likely be comparable to or less than that for the cask drop accident described above, the NRC concludes the likely impacts from activities at a DTS would be small.

Climate Change

In the probabilistic risk assessments described above, both EPRI and the NRC evaluated high winds and floods as initiating events for accidents. The dry cask storage system that was evaluated by the NRC was the Holtec HI–STORM 100 system. This vertical cask system is in common use (see Appendix G) at nuclear power plants. As discussed in more detail below, the NRC believes that NUREG–1864 provides a useful analysis of the types of high winds and floods that could be expected to occur as a result of climate change. Therefore, the results of the NRC's 2007 study (NUREG–1864, NRC 2007f) illustrate the effects of climate change for the purposes of this GEIS.

NUREG–1864 concluded that winds in excess of 644 km/hr (400 mph) would be required to cause storage cask tip-over, and winds in excess of 1,448 km/hr (900 mph) would be required to propel a heavy object into a storage cask with enough force to cause significant damage. There is no recorded evidence of tornado wind speeds in excess of 480 km/hr (300 mph) (NRC 2007f). Very few hurricanes have achieved wind speeds of 310 km/hr (190 mph) (Bender et al. 2010). Further, although climate models project future increases in the frequency of environmental conditions favorable to severe thunderstorms, the scarcity of high-quality data associated with the intensity and frequency of tornadoes and thunderstorm winds, combined with the fact that these phenomena are too small to be directly represented in climate models, makes it difficult to project how the character of severe thunderstorms might change in the future (GCRP 2014). Therefore, the NRC assumes that the risk posed by high winds remains very low.

Floods were also considered in NUREG–1864, but deemed not able to affect the plant that was the subject of the study. In general, the effects of floods on dry cask storage systems can include cask sliding, tip-over, and blockage of ventilation ports by water and silting of air passages. Other effects include water scouring below ISFSI foundations, burial under debris, and severe temperature gradients resulting from rapid cooling from immersion in water (NRC 2007f). However, based on the relatively slow rate of change in flood risk over time, the NRC is confident that any regulatory action that may be necessary will be taken in a timely manner to ensure the safety of dry cask storage systems.

If climate change influences on sea-level rise create conditions adverse to safety, the NRC has sufficient time to require licensees to implement corrective actions to identify and correct conditions adverse to safety. Some of the specific corrective actions that could be taken include elevating the existing ISFSI, relocating dry casks to higher ground onsite, or transporting the spent fuel to a different site.

Summary

The NRC has examined the risk of severe accidents in dry cask storage systems. Based on this assessment, which includes consideration of internal and external event initiators and climate change, the NRC concludes that the risk of severe accidents in dry cask storage systems is small.

4.18.2.3 Conclusion

The NRC has examined the risk of severe accidents in spent fuel pools and dry cask storage systems in several studies over the years. Based on these assessments, the NRC concludes that the risk of severe accidents in spent fuel pools and dry cask storage systems is SMALL.

4.19 Potential Acts of Sabotage or Terrorism

This section describes the environmental impacts of potential acts of sabotage or terrorism involving the continued storage of spent fuel. The NRC regulates the security of radioactive material as part of its domestic safeguards program.[5] This program provides for regulatory requirements; licensing and NRC oversight of facility access control; fitness for duty; material control and accounting; and physical protection of spent fuel storage in onsite spent fuel pools, at-reactor and away-from-reactor ISFSIs, and monitored retrievable storage installations.

This GEIS considers the potential risks of accidents and acts of sabotage or terrorism at spent fuel storage facilities. In 1984 and 1990, the NRC provided some discussion of the reasons why it believed that the possibility of a major accident or sabotage with offsite radiological impacts at a spent fuel storage facility is extremely remote. In the 2010 update to the Waste Confidence Decision, the Commission gave considerable attention to the issue of terrorism and spent fuel management (75 FR 81037). The Commission concluded that

> [t]oday spent fuel is better protected than ever. The results of security assessments, existing security regulations, and the additional protective and mitigative measures imposed since September 11, 2001, provide high assurance that the spent fuel in both spent fuel pools and in dry storage casks will be adequately protected (75 FR 81037).

There is dispute among the United States Courts of Appeals as to whether NEPA analyses require consideration of terrorist attacks. In *San Luis Obispo Mothers for Peace v. NRC*, the Court of Appeals for the Ninth Circuit held that the NRC needed to consider the environmental impacts of terrorism in its NEPA reviews. In contrast, in 2009, the Court of Appeals for the Third Circuit upheld the NRC's position that terrorist attacks are too far removed from the natural or expected consequences of agency action to require environmental analysis. Nonetheless, because some continuing storage will occur within the Ninth Circuit, this GEIS discusses the environmental impacts of a successful terrorist attack to comply with *San Luis Obispo Mothers for Peace v. NRC*. The Ninth Circuit left to agency discretion the precise manner in which the NRC undertakes a NEPA-terrorism review (NRC 2008c).

The environmental impacts of a successful terrorist attack, if one occurs, could be significant and destabilizing. The impact determinations for these attacks, however, are made with consideration of the low probability of successful attack. The environmental impact determination with respect to successful terrorist attacks, therefore, is based on risk, which the NRC defines as the product of the probability, even if only a qualitative assessment of

[5] The regulations in 10 CFR that are most applicable to the domestic safeguards program for spent nuclear fuel storage beyond the licensed life for operation are contained in Parts 11, 25, 26, 70, 72, 73, and 74.

probability is available, and the consequences of a successful attack. This means that a high-consequence, low-probability event could result in a small impact determination if the risk is sufficiently low.

Impacts from terrorist acts for spent fuel pool storage might occur only during the short-term timeframe, and the impacts for dry cask storage are substantially the same across the three timeframes. Therefore, this section of the GEIS follows a different format from other sections by presenting the various accident types only once. The three storage timeframes (short-term, long-term, and indefinite, as described in Chapter 1) apply as follows:

- During short-term storage, the probability and consequences of attacks on both the onsite spent fuel pool and at-reactor ISFSI are considered.
- Beyond short-term storage, spent fuel is assumed to have been moved from the spent fuel pool to an at-reactor ISFSI. Therefore, during long-term and indefinite storage timeframes, only the probability and consequences of attacks on the at-reactor ISFSI are applicable.

4.19.1 Attacks on Spent Fuel Pools

The NRC has determined that the probability of a successful terrorist attack on a spent fuel pool, although numerically indeterminable, is very low (73 FR 46204). To support this conclusion, the NRC reviewed the characteristics of spent fuel pools discussed in Chapter 2 and assessed how those features would deter terrorist attacks. Spent fuel pool structural features, complemented by the deployment of effective and visible physical security protection measures, described further below, are deterrents to terrorist attack. In addition, the emergency procedures developed for reactor accidents provide a means for mitigating the potential consequences of terrorist attacks (73 FR 46204).

Further, after the terrorist attacks of September 11, 2001, the NRC issued a series of Security Orders to require licensees to implement additional interim security measures. Through these Orders, the NRC supplemented the Design Basis Threat rule for radiological sabotage[6] and mandated specific licensee enhancement of security force training, access authorization, and defensive strategies, plus additional mitigative measures. In addition, through generic communications, the NRC specified expectations for enhanced notifications to the NRC for certain security events or suspicious activities.

In response to the Security Orders, facility licensees revised their physical security plans, access authorization programs, training and qualification plans, and safeguards contingency

[6] The definition for design basis threat for radiological sabotage is contained in 10 CFR 73.1(a)(1), which describes a determined violent external assault, attack by stealth, or deceptive actions, including diversionary actions, by an adversary force capable of operating in each of several modes and with attributes, assistance, and equipment as defined in the regulation. Under NRC's Design Basis Threat rule, licensees must be able to defend against these threats with high assurance.

plans. These revisions enhanced physical security with increased patrols, augmented security forces and capabilities, added additional security posts, added additional physical barriers, and required vehicle checks at greater standoff distances. Procedural enhancements resulted in greater coordination with law enforcement authorities, augmented security and emergency response training, equipment, and communication, and more restrictive site access controls for personnel, including expanded, expedited, and more thorough employee background investigations (NRC 2008c).

In 2007, the NRC amended its regulations in 10 CFR Part 73 governing licensee capability to defend against design basis threats of radiological sabotage to capture experience and insights gained by the NRC in implementing those requirements and to redefine the level of security requirements necessary to ensure adequate protection of the public health and safety and common defense and security (72 FR 12705). In 2009, the NRC amended its regulations in 10 CFR Parts 50, 52, 72, and 73 to codify the appropriate requirements from the Security Orders and update those requirements with new insights gained from implementation of the Security Orders, review of site security plans, implementation of the enhanced baseline inspection program, and NRC evaluation of force-on-force exercises. This rulemaking, which includes cybersecurity requirements, also updated the NRC's security regulatory framework for the licensing of new nuclear power plants (74 FR 13926). The cybersecurity requirements, which are codified as 10 CFR 73.54, require licensees to provide high assurance that digital computer and communication systems and networks are adequately protected against cyber-attacks, up to and including design basis threats as described in 10 CFR 73.1, “Purpose and Scope.” To ensure that design basis threats described in 10 CFR 73.1 remain a valid basis for the design of physical protection systems, the NRC staff performs extensive analysis of intelligence information gathered from classified and open sources and provides the results of this analysis, including recommendations for increasing or decreasing the design basis threat for NRC-licensed facilities, in an annual written report to the Commission.

As discussed in more detail in the NRC’s response to a draft U.S. Government Accountability Office report on material control and accounting of spent fuel, with regard to theft and diversion of spent fuel, the NRC believes that the likelihood that an adversary could steal spent fuel from a spent fuel pool is extremely low, given the security and radiation protection measures in place, the ease of detectability, and the physically disabling radiation from the spent fuel. Further, the NRC also does not consider the threat of a knowledgeable, active insider stealing a spent fuel rod, or portion thereof, to be credible (NRC 2005d).

The NRC has determined that these measures and national anti-terrorist measures to prevent, for example, aircraft hijackings, coupled with the robust nature of spent fuel pools, make the probability of a successful terrorist attack, although numerically indeterminable, very low (73 FR 46204).

Although a successful act of sabotage or terrorism by an armed attack is low in probability, the consequences of such an act could be severe. A discussion of a postulated spent fuel pool fire resulting from loss of pool water, which could result from a successful attack, is provided in Appendix F. The conditional consequences described in Appendix F include downwind collective radiation doses above one million person-rem, up to 191 early fatalities, and economic damages exceeding $50 billion. However, given the very low probability of a successful attack with these consequences, the NRC determined that the risk of successful attack is small.

4.19.2 Attacks on ISFSIs and DTS

Before September 11, 2001, the NRC's regulations that apply to future DTS[7] licensees and current and future ISFSI licensees required licensees to comply with the security requirements specified in 10 CFR Part 72, "Licensing Requirements for the Independent Storage of Spent Nuclear Fuel, High-Level Radioactive Waste, and Reactor-Related Greater than Class C Waste," and 10 CFR Part 73, "Physical Protection of Plants and Materials." After the attacks of September 11, 2001, the NRC enhanced security for all facilities licensed to store spent fuel through a combination of the existing security regulations and the issuance of Security Orders to individual ISFSI licensees. These orders ensured that a consistent, comprehensive protective strategy was in place for all ISFSIs.

As discussed in Chapter 2, two types of ISFSI licenses (general and specific) are available for the storage of spent fuel; a future DTS would be licensed under the specific license provisions of 10 CFR Part 72. Physical security requirements for these licensees appear in various sections of 10 CFR Part 73, depending on the type of licensee. The regulations in 10 CFR 72.212(b)(9), "Conditions of General License Issued under §72.210," require general ISFSI licensees to establish a physical protection program that protects the spent fuel against the design basis threat for radiological sabotage in accordance with applicable security requirements imposed on nuclear power reactor licensees under 10 CFR 73.55, "Requirements for Physical Protection of Licensed Activities in Nuclear Power Reactors Against Radiological Sabotage." For general-license ISFSIs, neither 10 CFR 72.212(b)(9) nor 10 CFR 73.55 imposes a dose limit for security events (i.e., acts of radiological sabotage). For specifically licensed ISFSIs and DTSs, NRC regulations at 10 CFR 73.51, "Requirements for the Physical Protection of Stored Spent Nuclear Fuel and High-Level Radioactive Waste," require licensees to establish and maintain a physical protection system that provides high assurance that licensed activities do not constitute an unreasonable risk to public health and safety. The physical protection system must protect against the loss of control of the ISFSI or DTS that could be sufficient to cause a radiation exposure exceeding the dose limitation in 10 CFR 72.106 (NRC 2007g).

[7] As described in Section 2.1.4 of this GEIS, there are currently no DTS licensees, but these requirements would apply to persons that seek to build and operate a DTS.

In general, the potential for theft or diversion of light water reactor spent fuel from the ISFSI with the intent of using the contained special nuclear material for nuclear explosives is not considered credible because of (1) the inherent protection afforded by the massive reinforced-concrete storage module and the steel storage canister; (2) the unattractive form of the contained special nuclear material, which is not readily separable from the radioactive fission products; and (3) the immediate hazard posed by the high radiation levels of the spent fuel to persons not provided radiation protection (NRC 1991c, 1992).

The immediate hazard posed by the high radiation levels of the spent fuel will, however, diminish over time, depending on burnup and the level of radiation deemed to provide adequate self-protection. Self-protection refers to the incapacitation inflicted upon a recipient from inherent radiation emissions in a timeframe that prevents the recipient from completing an intended task (Coates et al. 2005). This means that spent fuel could become more susceptible to possible theft or diversion over long periods of time. This susceptibility depends on the burnup; higher burnup spent fuel provides adequate self-protection for longer time periods. The Blue Ribbon Commission on America's Nuclear Future: Report to the Secretary of Energy (BRC 2012) concluded:

> As the duration of storage is extended, the amount of penetrating radiation emitted by spent fuel will diminish. In the process, the fuel loses a degree of "self-protection" against theft or diversion: in other words, unshielded exposure to the fuel becomes less immediately debilitating and hence creates less of a deterrent to handling by unauthorized persons. This means that over long time periods (perhaps a century or more, depending on burnup and the level of radiation that is deemed to provide adequate self-protection), the fuel could become more susceptible to possible theft or diversion (although other safeguards would remain in place). This in turn could change the security requirements for older spent fuel. Extending storage to timeframes of more than a century could thus require increasingly demanding and expensive security protections at storage sites.

Further, for non-light water reactor spent fuel, the period of self-protection may be lower than that of light water reactor spent fuel, depending on the burnup of the spent fuel and the isotopic composition of the special nuclear material (i.e., the attractiveness of the material for diversion).

Thus, additional security requirements may be necessary in the future if spent fuel remains in storage for a substantial period of time. Under those circumstances, it is reasonable to assume that, if necessary, the NRC will issue orders or enhance its regulatory requirements for ISFSI and DTS security, as appropriate, to ensure adequate protection of public health and safety and the common defense and security.

The NRC has determined that the measures described above, coupled with the robust nature of dry cask storage systems, make the probability of a successful terrorist attack, although

numerically indeterminable, very low. Furthermore, the probability of successfully detonating an improvised nuclear device (IND) is even more remote because there are significant steps required to manufacture an IND from spent fuel, including theft of the spent fuel, removal of the spent fuel from the site, and significant chemical and metallurgical processing steps to manufacture an IND.

The conditional consequence of a successful theft and diversion attack that ultimately results in detonation of an IND would be catastrophic. The National Academies and U.S. Department of Homeland Security have estimated environmental effects caused by detonation of an IND. For a 10-kiloton device, the shockwave could kill exposed persons within 0.6 km (0.4 mi); the heat effects could kill persons within 1.8 km (1.1 mi); and initial radiation doses would exceed 4 Gy (400 rad) up to 1.3 km (0.8 mi) away. Radioactive fallout could result in doses above 4 Gy (400 rad) out to 9.7 km (6 mi). Long-term environmental effects would include contaminated property and food supplies, death and illness, loss of jobs, and costs to local, State, and Federal governments to restore property and goods (National Academies 2005).

With respect to the potential for radiological sabotage, after the NRC issued the license for the Diablo Canyon ISFSI in March 2004, the Ninth Circuit reviewed the licensing action and, as discussed, required the NRC to consider terrorist acts in its environmental review associated with this licensing action. In response to the Ninth Circuit decision, the NRC supplemented its EA and finding of no significant impact for the Diablo Canyon ISFSI to address the likelihood and the potential consequences of a terrorist attack directed at the ISFSI (NRC 2007g):

> The NRC staff reviewed the analyses performed for generic ISFSI security assessments, and compared their assumptions to the relevant features of the Diablo Canyon ISFSI. Based on this comparison, the staff determined that the assumptions used in these generic security assessments regarding storage cask design, source term (amount of radioactive material released), and atmospheric dispersion, were representative, and in some cases, conservative, relative to the actual conditions at the Diablo Canyon ISFSI. In fact, because of the specific characteristics of the spent fuel authorized for storage at the Diablo Canyon ISFSI (lower burnup fuel), and the greater degree of dispersion of airborne radioactive material likely to occur at the site, any dose to affected residents nearest to the Diablo Canyon site will tend to be much lower than the doses calculated for the generic assessments. Based on these considerations, the dose to the nearest affected resident, from even the most severe plausible threat scenarios – the ground assault and aircraft impact scenarios – would likely be below 5 rem. In many scenarios, the hypothetical dose to an individual in the affected population could be substantially less than 5 rem, or none at all. In some situations, emergency planning actions could provide an additional measure of protection to mitigate the consequences, in the unlikely event that a successful attack were carried out at the Diablo Canyon ISFSI.

The specific dose results from the 2007 Diablo Canyon ISFSI EA Supplement were derived from the generic analysis performed as part of ISFSI security assessments (NRC 2003). The site-specific assumption in the EA Supplement was the distance to the nearest resident from the Diablo Canyon ISFSI, which is about 2.4 km (1.5 mi). By comparison, this is more than the average distance to nearby residences for other specifically licensed ISFSIs, which is about 1.6 km (1 mi). Doses at closer residences could be larger, but are likely to remain well below levels that could cause immediate health effects. The NRC took both the estimated dose and the likelihood into consideration in making a finding of no significant impact. Thus, the NRC determines that the environmental risk is SMALL. In addition, the environmental risk of impacts on property and land resulting from downwind settling of airborne radioactive material would be SMALL.

In February 2011, after a challenge to the Supplemental Environmental Assessment, the Ninth Circuit issued a decision affirming its sufficiency (*San Luis Obispo Mothers for Peace v. NRC*).

The consequences of successful radiological sabotage at a DTS would be similar to the consequences of postulated accidents at a DTS. For example, Section 4.18.1.2 of this GEIS describes a design basis event at a DTS involving 21 damaged spent fuel assemblies in an open cask that results in a release of radioactive material through an inoperable ventilation system. The total dose to a person standing 100 m (330 ft) away is estimated to be 7.21 mSv (721 mrem).

4.19.3 Conclusion

The NRC finds that even though the environmental consequences of a successful attack on a spent fuel pool during continued storage would be large, the very low probability of a successful attack ensures that the environmental risk is SMALL. Similarly, for operational ISFSIs and DTSs during continued storage, the NRC finds that the environmental risk is SMALL.

4.20 Summary

The impact determinations for at-reactor storage for each resource area for each timeframe are summarized in Table 4-2. For most of the resource areas, the impact determinations for all three timeframes are SMALL. Continued storage is not expected to adversely affect special species and habitats. For accidents (design basis and severe) and terrorism considerations, the environmental risks of continued storage are SMALL.

However, for a few resource areas, impact determinations are greater than SMALL and varied for the three timeframes. For the long-term storage and indefinite storage timeframes, during which ground-disturbing activities may occur, impacts on historic and cultural resources range from SMALL to LARGE. The impacts from management and disposal of nonradioactive waste would be SMALL for both the short-term and long-term timeframes but SMALL to MODERATE for indefinite storage.

Table 4-2. Summary of Environmental Impacts of Continued At-Reactor Storage

Resource Area	Short-Term Storage	Long-Term Storage	Indefinite Storage
Land Use	SMALL	SMALL	SMALL
Socioeconomics	SMALL	SMALL	SMALL
Environmental Justice	Disproportionately high and adverse impacts are not expected		
Air Quality	SMALL	SMALL	SMALL
Air Emissions	SMALL	SMALL	SMALL
Thermal Releases	SMALL	SMALL	SMALL
Climate Change	SMALL	SMALL	SMALL
Geology and Soils	SMALL	SMALL	SMALL
Surface Water			
Quality	SMALL	SMALL	SMALL
Consumptive Use	SMALL	SMALL	SMALL
Groundwater			
Quality	SMALL	SMALL	SMALL
Consumptive Use	SMALL	SMALL	SMALL
Terrestrial Resources	SMALL	SMALL	SMALL
Aquatic Ecology	SMALL	SMALL	SMALL
Special Status Species and Habitats	Impacts on Federally listed threatened and endangered species and Essential Fish Habitat would be determined as part of the consultations for the ESA and Magnuson-Stevens Fishery Conservation and Management Act		
Historic and Cultural Resources	SMALL	SMALL to LARGE	SMALL to LARGE
Noise	SMALL	SMALL	SMALL
Aesthetics	SMALL	SMALL	SMALL
Waste Management			
LLW	SMALL	SMALL	SMALL
Mixed Waste	SMALL	SMALL	SMALL
Nonradioactive Waste	SMALL	SMALL	SMALL to MODERATE
Transportation	SMALL	SMALL	SMALL
Traffic	SMALL	SMALL	SMALL
Health Impacts	SMALL	SMALL	SMALL
Public and Occupational Health	SMALL	SMALL	SMALL
Accidents	SMALL	SMALL	SMALL
Sabotage or Terrorism	SMALL	SMALL	SMALL

4.21 References

10 CFR Part 11. *Code of Federal Regulations*, Title 10, *Energy*, Part 11, "Criteria and Procedures for Determining Eligibility for Access to or Control Over Special Nuclear Material." Washington, D.C.

10 CFR Part 20. *Code of Federal Regulations*, Title 10, *Energy*, Part 20, "Standards for Protection Against Radiation." Washington, D.C.

10 CFR Part 25. *Code of Federal Regulations*, Title 10, *Energy*, Part 25, "Access Authorization." Washington, D.C.

10 CFR Part 26. *Code of Federal Regulations*, Title 10, *Energy*, Part 26, "Fitness for Duty Programs." Washington, D.C.

10 CFR Part 50. *Code of Federal Regulations*, Title 10, *Energy*, Part 50, "Domestic Licensing of Production and Utilization Facilities." Washington, D.C.

10 CFR Part 51. *Code of Federal Regulations*, Title 10, *Energy*, Part 51, "Environmental Protection Regulations for Domestic Licensing and Related Regulatory Functions." Washington, D.C.

10 CFR Part 52. *Code of Federal Regulations*, Title 10, *Energy*, Part 52, "Licenses, Certifications, and Approvals for Nuclear Power Plants." Washington, D.C.

10 CFR Part 70. *Code of Federal Regulations*, Title 10, *Energy*, Part 70, "Domestic Licensing of Special Nuclear Material." Washington, D.C.

10 CFR Part 72. *Code of Federal Regulations*, Title 10, *Energy*, "Licensing Requirements for the Independent Storage of Spent Nuclear Fuel, High-Level Radioactive Waste, and Reactor-Related Greater Than Class C Waste." Washington, D.C.

10 CFR Part 73. *Code of Federal Regulations*, Title 10, *Energy*, Part 73, "Physical Protection of Plants and Materials." Washington, D.C.

10 CFR Part 74. *Code of Federal Regulations*, Title 10, *Energy*, Part 74, "Material Control and Accounting of Special Nuclear Material." Washington, D.C.

10 CFR Part 100. *Code of Federal Regulations*, Title 10, *Energy*, Part 100, "Reactor Site Criteria." Washington, D.C.

36 CFR Part 60. *Code of Federal Regulations*, Title 36, *Parks, Forests, and Public Property*, Part 60, "National Registry of Historic Places." Washington, D.C.

36 CFR Part 800. *Code of Federal Regulations*, Title 36, *Parks, Forests, and Public Property*, Part 800, "Protection of Historic Properties." Washington, D.C.

40 CFR Part 93. *Code of Federal Regulations*, Title 40, *Protection of the Environment*, Part 93, "Determining Conformity of Federal Actions to State or Federal Implementations Plans." Washington, D.C.

40 CFR Part 125. *Code of Federal Regulations*, Title 40, *Protection of the Environment*, Part 125, "Criteria and Standards for the National Pollutant Discharge Elimination System." Washington, D.C.

50 CFR Part 402. *Code of Federal Regulations*, Title 50, *Wildlife and Fisheries,* Part 402, "Interagency Cooperation—Endangered Species Act of 1973, as Amended." Washington, D.C.

50 CFR Part 600. *Code of Federal Regulations*, Title 50, *Wildlife and Fisheries*, Part 600, "Magnuson–Stevens Act Provisions." Washington, D.C.

59 FR 7629. February 16, 1994. "Executive Order 12898: Federal Actions to Address Environmental Justice in Minority Populations and Low-Income Populations." *Federal Register*, Executive Office of the President, Washington, D.C.

69 FR 52040. August 24, 2004. "Policy Statement on the Treatment of Environmental Justice Matters in NRC Regulatory and Licensing Actions." *Federal Register*, U.S. Nuclear Regulatory Commission, Washington, D.C.

72 FR 12705. March 19, 2007. "Design Basis Threat." *Federal Register*, U.S. Nuclear Regulatory Commission, Washington, D.C.

73 FR 46204. August 8, 2008. "The Attorney General of Commonwealth of Massachusetts, the Attorney General of California; Denial of Petitions for Rulemaking." *Federal Register*, U.S. Nuclear Regulatory Commission, Washington, D.C.

74 FR 13926. March 27, 2009. "Power Reactor Security Requirements, Final Rule." *Federal Register*, U.S. Nuclear Regulatory Commission, Washington, D.C. Accession No. ML080570264.

75 FR 81037. December 23, 2010. "Waste Confidence Decision Update." *Federal Register*, U.S. Nuclear Regulatory Commission, Washington, D.C.

AEC (U.S. Atomic Energy Commission). 1972. *Environmental Survey of Transportation of Radioactive Materials to and From Nuclear Power Plants*. WASH–1238, Washington, D.C. Available at http://www.osti.gov/energycitations/product.biblio.jsp?osti_id=4569134.

ANSI/ANS (American National Standards Institute/American Nuclear Society). 1992. *Design Criteria for an Independent Spent Fuel Storage Installation (Dry Storage Type)*. ANSI/ANS 57.9–1992, La Grange Park, Illinois. Accession No. ML030560583.

ASME International. 2010. *Rules for Construction of Overhead and Gantry Cranes (Top Running Bridge, Multiple Girder)*. ASME NOG–1, New York, New York.

Bald and Golden Eagle Protection Act of 1940, as amended. 16 USC 668–668d *et seq.*

Beitinger, T.L., W.A. Bennett, and R.W. McCauley. 2000. "Temperature Tolerances of North American Freshwater Fishes Exposed to Dynamic Changes in Temperature." *Environmental Biology of Fishes* 58:237–275, New York, New York.

Bender, M.A., T.R. Knutson, R.E. Tuleya, J.J. Sirutis, G.A. Vecchi, S.T. Garner, and I.M. Held. 2010. "Modeled Impact of Anthropogenic Warming on the Frequency of Intense Atlantic Hurricanes." *Science* 327(5964):454–458, Washington, D.C.

BRC (Blue Ribbon Commission). 2012. *Transportation and Storage Subcommittee Report to the Full Commission: Updated Report.* Washington, D.C. Available at http://cybercemetery.unt.edu/archive/brc/20120620215746/http://brc.gov/sites/default/files/documents/final_updated_ts_report_012612.pdf.

Clean Water Act (see Federal Water Pollution Control Act of 1972).

Coastal Zone Management Act of 1972, as amended. 16 USC 1451 *et seq.*

Christensen, M.R., D.C. Koelsch, L. Stewart, and M.A. McKinnon. 2000. *Spent Nuclear Fuel Dry Transfer System Cold Demonstration Project*. INEEL/EXT–99–01335, Idaho National Engineering and Environmental Laboratory, Idaho Falls, Idaho. Available at http://www.inl.gov/technicalpublications/Documents/3318121.pdf.

Coates, C.W., B.L. Broadhead, A.M. Krichinsky, R.W. Leggett, M.B. Emmett, and J.B. Hines. 2005. *Radiation Effects on Personnel Performance Capability and a Summary of Dose Levels for Spent Research Reactor Fuels*. ORNL/TM–2005/261, Oak Ridge, Tennessee. Available at http://web.ornl.gov/~webworks/cppr/y2007/rpt/124368.pdf?origin=publication_detail.

Consumers Energy Company and Nuclear Management Company, LLC. 2001. *Palisades Nuclear Plant Biological Assessment of the 1999 Cooling Water Flow Increase at the Palisades*

Plant, near South Haven, Michigan. Consumers Energy Company, Jackson, Michigan, and Nuclear Management Company, LLC, Covert, Michigan.

DOE (U.S. Department of Energy). 1996. *Dry Transfer System Topical Safety Analysis Report.* Volumes 2 and 3, Washington D.C. Accession Nos. ML060730037, ML060730040.

DOE (U.S. Department of Energy). 2002. *Final Environmental Impact Statement for a Geologic Repository for the Disposal of Spent Nuclear Fuel and High-Level Radioactive Waste at Yucca Mountain, Nye County, Nevada*. DOE/EIS–0250, Office of Civilian Radioactive Waste Management, North Las Vegas, Nevada. Accession No. ML14024A327.

DOE (U.S. Department of Energy). 2012. *Managing Aging Effects on Dry Cask Storage Systems for Extended Long-Term Storage and Transportation of Used Fuel.* FCRD–USED–2012–000119, Washington, D.C. Available at http://www.ipd.anl.gov/anlpubs/2012/07/73873.pdf.

Duke Energy. 2013. Letter from Duke Energy to NRC, dated September 30, 2013, regarding "Response to NRC Request for Additional Information Dated August 1, 2013 Regarding the Decommissioning Funding Status Report for the Independent Spent Fuel Storage Installations." Charlotte, North Carolina. Accession No. ML13275A203.

Endangered Species Act of 1973 (ESA), as amended. 16 USC 1531 *et seq.*

EPA (U.S. Environmental Protection Agency). 1974. *Information on Levels of Environmental Noise Requisite to Protect Public Health and Welfare with an Adequate Margin of Safety*. 550/9–74–004, Washington, D.C. Accession No. ML12241A393.

EPA (U.S. Environmental Protection Agency). 2002. *Case Study Analysis for the Proposed Section 316(b) Phase II Existing Facilities Rule*. EPA–821–R–02–002, Office of Science and Technology, Washington, D.C. Available at http://water.epa.gov/lawsregs/lawsguidance/cwa/316b/phase2/casestudy_index.cfm.

EPA (U.S. Environmental Protection Agency). 2013. *Inventory of U.S. Greenhouse Gas Emissions and Sinks: 1990–2011*. EPA 430-R-13-001, Washington, D.C. Accession No. ML13331A473.

EPRI (Electric Power Research Institute). 2002. "Water and Sustainability." Volume 3 of *U.S. Water Consumption for Power Production—The Next Half Century*. Palo Alto, California. Available at http://www.circleofblue.org/waternews/wp-content/uploads/2010/08/EPRI-Volume-3.pdf.

EPRI (Electric Power Research Institute). 2004b. *Probability Risk Assessment (PRA) of Bolted Storage Casks: Updated Quantification and Analysis Report.* Report 1009691, Palo Alto, California. Available at http://www.epri.com/abstracts/Pages/ProductAbstract.aspx?ProductId=000000000001009691.

EPRI (Electric Power Research Institute). 2010. *Industry Spent Fuel Storage Handbook*. Palo Alto, California. Available at http://www.epri.com/abstracts/Pages/ProductAbstract.aspx?ProductId=000000000001021048.

Exelon (Exelon Generation Company, LLC, LaSalle County Station). 2001. Letter from Exelon to NRC, dated August 17, 2001, regarding "Environmental Non-Routine Event Report for Exelon Generation Company, LLC, LaSalle County Station." Marseilles, Illinois. Accession No. ML012330070.

Exelon (Exelon Generation Company, LLC, LaSalle County Station). 2005. Letter from Exelon to NRC, dated July 28, 2005, regarding "Environmental Non-Routine Event Report for Exelon Generating Company, LLC—Braidwood Station." Marseilles, Illinois. Accession No. ML052160140.

Federal Water Pollution Control Act of 1972, as amended (also referred to as the Clean Water Act). 33 USC 1251 *et seq.*

Fish and Wildlife Coordination Act of 1934, as amended. 16 USC 661-667e *et seq*.

FWS/NMFS (U.S. Fish and Wildlife Service/National Marine Fisheries Service). 1998. *Endangered Species Consultation Handbook, Procedures for Conducting Consultation and Conference Activities Under Section 7 of the Endangered Species Act*. Washington, D.C. Accession No. ML12325A215.

Foster Wheeler (Foster Wheeler Environmental Corporation). 2003. Letter from D.I. Rogers, Jr. to NRC, dated November 14, 2003, regarding "Idaho Spent Fuel (ISF) Facility Submittal of Amendment 3 to License Application, Docket No. 72.25, TAC No. L23389." Morris Plains, New Jersey. Accession No. ML033240044.

GCRP (U.S. Global Change Research Program). 2014. *Climate Change Impacts in the United States: The Third National Climate Assessment*. J.M. Melillo, T.C. Richmond, and G.W. Yohe, eds. U.S., Government Printing Office, Washington, D.C. Accession No. ML14129A233.

Hall, C.A.S., R. Howarth, B. Moore, III, and C.J. Vorosmarty. 1978. "Environmental Impacts of Industrial Energy Systems in the Coastal Zone." *Annual Review of Energy* 3:395–475, Palo Alto, California.

Magnuson–Stevens Fishery Conservation and Management Act of 1976, as amended. 16 USC 1801 *et seq.*

Marine Mammal Protection Act of 1972, as amended. 16 USC 1361-1421h *et seq*.

Migratory Bird Treaty Act of 1918, as amended. 16 USC 703–712 *et seq*.

National Academies. 2005. "News and Terrorism—Communicating in a Crisis: Nuclear Attack." National Academies and the U.S. Department of Homeland Security, Washington, D.C. Available at: http://www.dhs.gov/xlibrary/assets/prep_nuclear_fact_sheet.pdf.

National Environmental Policy Act of 1969 (NEPA), as amended. 42 USC 4321 *et seq.*

National Historic Preservation Act of 1966 (NHPA), as amended. 16 USC 470 *et seq*.

NRC (U.S. Nuclear Regulatory Commission). 1974. *Design Basis Tornado for Nuclear Power Plants.* Regulatory Guide 1.76, Revision 0, Washington, D.C. Accession No. ML003740273.

NRC (U.S. Nuclear Regulatory Commission). 1975. *Reactor Safety Study: An Assessment of Accident Risks in U.S. Commercial Nuclear Power Plants*. NUREG–75/014 (WASH–1400). Washington, D.C. Accession No. ML083570090.

NRC (U.S. Nuclear Regulatory Commission). 1976. *Flood Protection for Nuclear Plants.* Regulatory Guide 1.102, Washington, D.C. Accession No. ML003740308.

NRC (U.S. Nuclear Regulatory Commission). 1977. *Final Environmental Statement on Transportation of Radioactive Material by Air and Other Modes*. NUREG–0170, Volume 1, Washington, D.C. Accession No. ML12192A283.

NRC (U.S. Nuclear Regulatory Commission). 1984. *Environmental Assessment for 10 CFR Part 72 "Licensing Requirements for the Independent Storage of Spent Fuel and High-Level Radioactive Waste*." NUREG–1092, Washington, D.C. Accession No. ML091050510.

NRC (U.S. Nuclear Regulatory Commission). 1989. *Regulatory Analysis for the Resolution of Generic Issue 82, "Beyond Design Basis Accidents in Spent Fuel Pools."* NUREG–1353, Washington, D.C. Accession No. ML082330232.

NRC (U.S. Nuclear Regulatory Commission). 1991a. *Offsite Dose Calculation Manual Guidance: Standard Radiological Effluent Controls for Pressurized Water Reactors.* Generic Letter 89–01, Supplement No. 1, NUREG–1301, Washington, D.C. Accession No. ML091050061.

NRC (U.S. Nuclear Regulatory Commission). 1991b. *Offsite Dose Calculation Manual Guidance: Standard Radiological Effluent Controls for Boiling Water Reactors.* NUREG–1302, Generic Letter 89–01, Supplement No. 1, Washington, D.C. Accession No. ML031290469.

NRC (U.S. Nuclear Regulatory Commission). 1991c. *Environmental Assessment Related to Construction and Operation of the Calvert Cliffs Independent Spent Fuel Storage Installation*. Washington, D.C. Accession No. ML022550053.

NRC (U.S. Nuclear Regulatory Commission). 1991d. *Environmental Assessment Related to Construction and Operation of the Fort St. Vrain Independent Spent Fuel Storage Installation*. Washington, D.C. Accession No. ML062710252.

NRC (U.S. Nuclear Regulatory Commission). 1992. *Environmental Assessment Related to Construction and Operation of the Prairie Island Independent Spent Fuel Storage Installation*. Washington, D.C. Accession No. ML090260415.

NRC (U.S. Nuclear Regulatory Commission). 1996. *Generic Environmental Impact Statement for License Renewal of Nuclear Plants*. NUREG−1437, Washington, D.C. Available at http://www.nrc.gov/reading-rm/doc-collections/nuregs/staff/sr1437/.

NRC (U.S. Nuclear Regulatory Commission). 2000. *Radiological Consequence Analyses Using Alternative Source Terms.* Standard Review Plan. SRP–15.0.1, Revision 0. NUREG–0800, Washington, D.C. Accession No. ML003734190.

NRC (U.S. Nuclear Regulatory Commission). 2001. *Technical Study of Spent Fuel Accident Risk at Decommissioning Nuclear Power Plants*. NUREG–1738, Washington, D.C. Accession No. ML010430066.

NRC (U.S. Nuclear Regulatory Commission). 2002a. "Memorandum and Order in the Matter of Private Fuel Storage LLC (Independent Spent Fuel Storage Installation) [Environmental Justice Contention]." CLI–02–20, Washington, D.C. Accession No. ML022740427.

NRC (U.S. Nuclear Regulatory Commission). 2002b. *Final Generic Environmental Impact Statement for Decommissioning of Nuclear Facilities, Supplement 1 Regarding the Decommissioning of Nuclear Power Reactors.* NUREG–0586, Supplement 1, Volumes 1 and 2, Washington, D.C. Accession Nos. ML023470327, ML023500228.

NRC (U.S. Nuclear Regulatory Commission). 2003. *Environmental Assessment Related to the Construction and Operation of the Diablo Canyon Independent Spent Fuel Storage Installation*. Washington, D.C. Accession No. ML032970370.

NRC (U.S. Nuclear Regulatory Commission). 2004a. *Environmental Impact Statement for the Proposed Idaho Spent Fuel Facility at the Idaho National Engineering and Environmental Laboratory in Butte County, Idaho*. NUREG–1773, Washington, D.C. Accession No. ML040490135.

NRC (U.S. Nuclear Regulatory Commission). 2004b. "Memorandum and Order in the Matter of Private Fuel Storage LLC (Independent Spent Fuel Storage Installation) [Environmental Justice Contention]. CLI–04–09, Washington, D.C. Accession No. ML040840319.

NRC (U.S. Nuclear Regulatory Commission). 2004c. *Environmental Assessment for the License Renewal of the General Electric Morris Operation Independent Spent Fuel Storage Installation in Morris, Illinois*. Washington, D.C. Accession No. ML043360415.

NRC (U.S. Nuclear Regulatory Commission). 2005a. *Environmental Assessment Related to the Construction and Operation of the Humboldt Bay Independent Spent Fuel Storage Installation*. Washington, D.C. Accession No. ML052430106.

NRC (U.S. Nuclear Regulatory Commission). 2005b. *Environmental Assessment Related to the Renewal of the H.B. Robinson Steam Electric Plant, Unit No. 2 Independent Spent Fuel Storage Installation License, Special Nuclear Material License No. SNM–2502*. Washington, D.C. Accession No. ML050700137.

NRC (U.S. Nuclear Regulatory Commission). 2005c. *Environmental Assessment Related to the Renewal of the License for the Surry Independent Spent Fuel Storage Installation*. Washington, D.C. Accession No. ML040560238.

NRC (U.S. Nuclear Regulatory Commission). 2005d. Letter from L. Reyes to J. Wells, dated March 25, 2005, regarding "Draft Report, 'NRC Needs to Do More to Ensure that Power Plants are Effectively Controlling Spent Nuclear Fuel (GAO–05–339).'" Washington, D.C. Accession No. ML050690092.

NRC (U.S. Nuclear Regulatory Commission). 2006a. *Liquid Radioactive Release Lessons Learned Task Force Final Report*. Washington, D.C. Accession No. ML062650312.

NRC (U.S. Nuclear Regulatory Commission). 2006b. *Environmental Impact Statement for an Early Site Permit (ESP) at the Exelon ESP Site, Final Report.* NUREG–1815, Volume 1, Washington, D.C. Accession No. ML061930264.

NRC (U.S. Nuclear Regulatory Commission). 2006c. *Final Environmental Impact Statement for an Early Site Permit (ESP) at the North Anna ESP Site*. NUREG–1811, Volume 1, Washington, D.C. Accession No. ML063480261.

NRC (U.S. Nuclear Regulatory Commission). 2006d. Letter from M. Ryan to D. Klein, dated October 17, 2006, regarding "Probabilistic Risk Assessment of Dry Cask Storage of Spent Nuclear Fuel." Washington, D.C. Accession No. ML062900529.

NRC (U.S. Nuclear Regulatory Commission). 2007a. *Generic Environmental Impact Statement for License Renewal of Nuclear Plants, Supplement 29, Regarding Pilgrim Nuclear Power Station, Final Report*. NUREG–1437, Supplement 29, Volume 1, Washington, D.C. Accession No. ML071990020.

NRC (U.S. Nuclear Regulatory Commission). 2007b. *Standard Review Plan for the Review of Safety Analysis Reports for Nuclear Power Plants: LWR Edition.* NUREG–0800, Revision 6, Washington, D.C. Accession No. ML003734190.

NRC (U.S. Nuclear Regulatory Commission). 2007c. *Design-Basis Tornado and Tornado Missiles for Nuclear Power Plants*. Regulatory Guide 1.76, Revision 1, Washington, D.C. Accession No. ML070360253.

NRC (U.S. Nuclear Regulatory Commission). 2007d. *Seismic Design Classification.* Regulatory Guide 1.29, Revision 4, Washington, D.C. Accession No. ML070310052.

NRC (U.S. Nuclear Regulatory Commission). 2007e. *Quality Group Classifications and Standards for Water-, Steam-, and Radioactive-Waste-Contaminating Components of Nuclear Power Plants*. Regulatory Guide 1.26, Revision 4, Washington, D.C. Accession No. ML070290283.

NRC (U.S. Nuclear Regulatory Commission). 2007f. *A Pilot Probabilistic Risk Assessment of a Dry Cask Storage System at a Nuclear Power Plant.* NUREG–1864, Washington, D.C. Accession No. ML071340012.

NRC (U.S. Nuclear Regulatory Commission). 2007g. *Supplement to the Environmental Assessment and Final Finding of No Significant Impact Related to the Construction and Operation of the Diablo Canyon Independent Spent Fuel Storage Installation*. Washington, D.C. Accession No. ML072400511.

NRC (U.S. Nuclear Regulatory Commission). 2008a. *Generic Environmental Impact Statement for License Renewal of Nuclear Plants, Supplement 32 Regarding Wolf Creek Generating Station*. NUREG–1437, Supplement 32, Washington, D.C. Available at http://www.nrc.gov/reading-rm/doc-collections/nuregs/staff/sr1437/supplement32/.

NRC (U.S. Nuclear Regulatory Commission). 2008b. *Final Environmental Impact Statement for an Early Site Permit (ESP) at the Vogtle Electric Generating Plant Site*. NUREG–1872, Volume 1, Washington, D.C. Accession No. ML082240145.

NRC (U.S. Nuclear Regulatory Commission). 2008c. "Memorandum and Order in the Matter of Pacific Gas and Electric Co. (Diablo Canyon Power Plant Independent Spent Fuel Storage Installation)." CLI–08–01, Washington, D.C. Accession No. ML080150364.

NRC (U.S. Nuclear Regulatory Commission). 2009a. *Environmental Assessment for the Amendment of U.S. Nuclear Regulatory Commission License No. SNM–2506 for Prairie Island Independent Spent Fuel Storage Installation*. Washington, D.C. Accession No. ML093080494.

NRC (U.S. Nuclear Regulatory Commission). 2009b. *Environmental Assessment for the Renewal of U.S. Nuclear Regulatory Commission License No. SNM–2503 for Oconee Nuclear Station Independent Spent Fuel Storage Installation*. Washington, D.C. Accession No. ML091340557.

NRC (U.S. Nuclear Regulatory Commission). 2010. Memorandum from P. Hiland to B.W. Sheron, dated September 2, 2010, regarding "Safety/Risk Assessment Results for Generic Issue 199, *'Implications of Updated Probabilistic Seismic Hazard Estimates in Central and Eastern United States on Existing Plants*.'" Washington, D.C. Accession No. ML100270582.

NRC (U.S. Nuclear Regulatory Commission). 2011a. *Final Environmental Impact Statement for the Combined License (COL) for Calvert Cliffs Nuclear Power Plant Unit 3.* NUREG–1936, Volumes 1 and 2, Washington, D.C. Accession Nos. ML11129A167, ML11129A179.

NRC (U.S. Nuclear Regulatory Commission). 2011b. *Senior Management Review of Overall Regulatory Approach to Groundwater Protection.* SECY–11–0019, Washington, D.C. Accession No. ML110050525.

NRC (U.S. Nuclear Regulatory Commission). 2011c. *Final Environmental Impact Statement for the Combined Licenses (COLs) for Virgil C. Summer Nuclear Station, Units 2 and 3*. NUREG–1939, Volumes 1 and 2, Washington, D.C. Accession Nos. ML11098A044, ML11098A057.

NRC (U.S. Nuclear Regulatory Commission). 2011d. *Final Environmental Impact Statement for the Combined Licenses (COLs) for South Texas Project Electric Generating Station Units 3 and 4*. NUREG–1937, Washington, D.C. Accession No. ML11049A000.

NRC (U.S. Nuclear Regulatory Commission). 2011e. *Fact Sheet on Seismic Issues for Nuclear Power Plants.* Washington, D.C. Accession No. ML081620327.

NRC (U.S. Nuclear Regulatory Commission). 2011f. *Design-Basis Hurricane and Hurricane Missiles for Nuclear Power Plants*. Regulatory Guide 1.221, Revision 0, Washington, D.C. Accession No. ML110940300.

NRC (U.S. Nuclear Regulatory Commission). 2012a. *Environmental Assessment for the Proposed Renewal of U.S. Nuclear Regulatory Commission License No. SNM–2505 for Calvert Cliffs Nuclear Power Plant, LLC's Independent Spent Fuel Storage Installation*. Washington, D.C. Accession No. ML121220084.

NRC (U.S. Nuclear Regulatory Commission). 2012b. *Occupational Radiation Exposure at Commercial Nuclear Power Reactors and Other Facilities 2010: Forty-Third Annual Report*. NUREG–0713, Volume 32, Washington, D.C. Available at http://www.nrc.gov/reading-rm/doc-collections/nuregs/staff/sr0713/v32/.

NRC (U.S. Nuclear Regulatory Commission). 2012c. *Central and Eastern United States Seismic Source Characteristics for Nuclear Facilities.* NUREG–2115, Washington, D.C. Accession No. ML12048A776.

NRC (U.S. Nuclear Regulatory Commission). 2012d. *Request for Information Pursuant to Title 10 of the Code of Federal Regulations 50.54(f) Regarding Recommendations 2.1, 2.3, and 9.3 of the Near-Term Task Force Review of Insights From the Fukushima Dai-Ichi Accident*. Washington, D.C. Accession No. ML12053A340.

NRC (U.S. Nuclear Regulatory Commission). 2013a. *Generic Environmental Impact Statement for License Renewal of Nuclear Plants*. NUREG–1437, Revision 1, Washington, D.C. Accession No. ML13107A023.

NRC (U.S. Nuclear Regulatory Commission). 2013b. *Environmental Impact Statement for the Combined License (COL) for Enrico Fermi Unit 3 Final Report.* NUREG–2105, Volumes 1 and 2, Washington, D.C. Accession Nos. ML12307A172, ML12307A176.

NRC (U.S. Nuclear Regulatory Commission). 2013c. *Attachment 1—Staff Guidance for Greenhouse Gas and Climate Change Impacts for New Reactor Environmental Impact Statements*. COL/ESP-ISG-026, Washington, D.C. Accession No. ML12326A811.

NRC (U.S. Nuclear Regulatory Commission). 2013d. *Final Environmental Impact Statement for Combined Licenses for William States Lee III Nuclear Station Units 1 and 2*. NUREG–2111, Volumes 1 and 2, Washington, D.C. Accession Nos. ML13340A005, ML13340A006, ML13340A007.

NRC (U.S. Nuclear Regulatory Commission). 2013e. *Generic Issue Management Control System Report for Fiscal Year 2013 1st Quarter*. Washington, D.C. Accession No. ML13007A492.

Pacific Gas and Electric Company. 2012. Letter from Pacific Gas and Electric Company to NRC, dated December 17, 2012, regarding "Diablo Canyon Independent Spent Fuel Storage Installation - Decommissioning Funding Plan." Avila Beach, California. Accession No. ML12353A315.

Prasad, R., L. Hibler, A. Coleman, and D. Ward. 2011. *Design-Basis Flood Estimation for Site Characterization at Nuclear Power Plants in the United States of America.* NUREG/CR–7046, Pacific Northwest National Laboratory, Richland, Washington. Accession No. ML11321A195.

Resource Conservation and Recovery Act of 1976 (RCRA). 42 USC 6901 *et seq*.

Safe Drinking Water Act, as amended. 42 USC 300f *et seq.*

San Luis Obispo Mothers for Peace v. NRC (Nuclear Regulatory Commission). 635 F.3d 1109 (9th Cir. 2011).

Transnuclear, Inc. 2004. *Standardized NUHOMS® Horizontal Modular Storage System for Irradiated Nuclear Fuel*. Final Safety Analysis Report, Volume 3 of 4, Appendix M, Hawthorne, New York. Accession No. ML051040570.

Washington State Department of Transportation. 2014. *Biological Assessment Preparation for Transportation Projects – Advanced Training Manual – Version 2014*. Olympia, Washington. Available at http://www.wsdot.wa.gov/Environment/Biology/BA/BAguidance.htm.

5.0 Environmental Impacts of Away-From-Reactor Storage

This chapter evaluates the environmental impacts of continued away-from-reactor storage of spent nuclear fuel (spent fuel) in an independent spent fuel storage installation (ISFSI) beyond the licensed life for operation of a reactor during the timeframes considered in this *Generic Environmental Impact Statement for Continued Storage of Spent Nuclear Fuel* (GEIS).

No away-from-reactor ISFSIs of the size considered in this chapter have been constructed in the United States; however, the U.S. Nuclear Regulatory Commission (NRC) has issued a license to Private Fuel Storage, LLC (PFS) to construct and operate the Private Fuel Storage Facility (PFSF) on the Reservation of the Skull Valley Band of Goshute Indians in Tooele County, Utah (NRC 2006a).[1]

For the purposes of evaluating the environmental impacts of continued storage of spent fuel at an away-from-reactor ISFSI, the NRC evaluates the impacts of a facility of the same size as the proposed PFS ISFSI. To perform this evaluation, the NRC makes the following assumptions:

- The ISFSI would have the same capacity as that analyzed for the PFSF, which was designed to store up to 40,000 MTU of spent fuel. This amount of spent fuel is more than half of the amount generated to date by commercial reactors in the United States, and more than twice as much as the amount in dry storage based on the most recent data (NRC 2013a). The amount of fuel storage (40,000 MTU) evaluated for the away-from-reactor ISFSI would represent all of the spent fuel from multiple reactor sites.
- The ISFSI would be of approximately the same physical size as that analyzed for the PFSF, which would have been built on a fenced 330-ha (820-ac) site; the actual storage facilities would have been built on a 40-ha (99-ac) portion of the site. The onsite facilities (e.g., buildings and storage pads) for the ISFSI would be similar to those for the PFSF. This aligns with the preceding assumption.

[1] Although a license was issued, the PFSF has not yet been constructed. However, the NRC determined based on its review of the application that there is reasonable assurance that if the PFSF is constructed: (i) the activities authorized by the license can be conducted without endangering the health and safety of the public; and (ii) these activities will be conducted in compliance with the applicable regulations of 10 CFR Part 72 (NRC 2006a). See also Appendix B, Section B.3.2.2, of this GEIS. In addition, the U.S. Department of Energy has indicated that a storage facility of this type is part of its plan to respond to the recommendations of the "Blue Ribbon Commission on America's Nuclear Future" (DOE 2013).

- The ISFSI would require a dry transfer system (DTS) similar to that described in Section 2.1.4 of this GEIS for the long-term storage and indefinite storage timeframes. The DTS is assumed to be built sometime after the ISFSI is built because it would not be needed immediately.
- Construction and operation of the ISFSI would be similar to that analyzed for the PFSF and would require workforces similar in size to those described for the PFSF, consistent with the first assumption above.
- No specific location is used by the NRC in the evaluation of an away-from-reactor ISFSI. However, the location of the ISFSI would be chosen to meet the siting evaluation factors in Title 10 of the *Code of Federal Regulations* Part 72, Subpart E (10 CFR Part 72, Subpart E). For example, a site would be deemed unsuitable if adequate protection cannot be provided for design basis external events. The NRC would also consider characteristics such as population density, seismicity, and flooding potential as part of its evaluation of a proposed ISFSI site.
- In most instances, placement of facilities on a proposed site could be adjusted to minimize or avoid impacts on water, ecological, historic and cultural, and other resources in the area; however, the NRC recognizes that this is not always possible. Because an away-from-reactor ISFSI does not depend on a significant water supply and has limited electrical power needs, an applicant may have more flexibility in how it chooses to place facilities on a site and, therefore, a greater chance of avoiding impacts to resources in the area.

The NRC believes that these assumptions are reasonable and provide an acceptable basis for developing a generic evaluation of away-from-reactor storage of spent fuel. The NRC makes no assumptions about when the ISFSI might be built. While the NRC assumes that any proposed away-from-reactor ISFSI would likely be similar to the assumed generic facility described above from the standpoint of the size, operational characteristics, and location of the facility, the NRC would evaluate the site-specific impacts of the construction and operation of any proposed facility as part of that facility's licensing process. This review would not reanalyze the impacts of continued storage of the spent fuel, but would incorporate the impact determinations of this GEIS, as stated in 10 CFR 51.23(b). In this chapter, the term ISFSI refers to all of the original facilities that would be built (i.e., storage pads, casks, and canister transfer building), and the DTS is addressed separately because the NRC assumes that it would be added after the ISFSI would be placed into operation.

In addition to the assumptions discussed above, the analysis of the environmental impacts of an away-from-reactor ISFSI are based, in general, on the description of the affected environment provided and discussed in Sections 3.1 through 3.16 for at-reactor spent fuel storage. However, some aspects of the discussions are not applicable, or are not applicable in the same way, for an away-from-reactor ISFSI. The NRC analysis will be based on the following differences:

- Portions of the discussion of at-reactor spent fuel storage address facilities that are in semi-urban areas. However, the NRC assumes that an away-from-reactor ISFSI will be built in an area of low population density.
- Portions of the discussion of at-reactor spent fuel storage start from an assumption that socioeconomic conditions and infrastructure (e.g., access roads) have been established prior to the short-term storage timeframe due to the presence of an existing nuclear power plant. For an away-from-reactor ISFSI, the NRC assumes conditions typical in remote areas (e.g., limited pre-existing road infrastructure).
- Portions of the discussion of at-reactor spent fuel storage start from an assumption that certain site conditions (e.g., proximity to major waterbodies and associated historic and cultural resources) are related to the way nuclear power plants are sited. Those conditions likely would not be applicable to an away-from-reactor ISFSI. For an away-from-reactor ISFSI, the NRC assumes that the site selection would be adjusted to minimize impacts on local resources, including historic and cultural resources and special status species and habitats, while acknowledging that in some cases avoiding impacts may not be possible.
- Portions of the discussion of at-reactor spent fuel storage assume pre-existing programs associated with operating reactors (e.g., radiological environmental monitoring program and monitoring for decommissioning) that would exist in a somewhat different form for an away-from-reactor ISFSI. For an away-from-reactor facility, the NRC bases its evaluation of the impacts of public and occupational doses on the limits and radiological monitoring requirements in 10 CFR Part 72 and 10 CFR Part 20 that are applicable to an away-from-reactor ISFSI.
- Portions of the discussion of at-reactor spent fuel storage focus on issues related to reactor plant systems (e.g., cooling-water systems, liquid and gaseous radioactive waste, and transmission lines), which would not be applicable for an away-from-reactor ISFSI. For an away-from-reactor facility, the NRC bases its evaluation of impacts on the systems and supporting facilities that are expected at such an installation.

With these exceptions, the NRC used the descriptions of the affected environment in Sections 3.1 through 3.16 in its evaluation of the environmental impacts of an away-from-reactor ISFSI.

Major features of the away-from-reactor ISFSI include the canister transfer building, the DTS, the storage casks, and the storage pads. The canister transfer building is used to receive transportation packages and to move spent fuel canisters from the transportation packages to storage casks for movement to the pads. The building would also be used to move spent fuel canisters from the storage casks into transportation packages for the shipment of the spent fuel to the repository. The canister transfer building would be used in the early years and toward the end of the ISFSI's operational period, recognizing that the shipment of the fuel from the reactors

to the ISFSI might occur over a period of 20 or more years. Shipment of the fuel from the ISFSI to the repository would occur over a similar timeframe. The DTS is designed to handle spent fuel outside the storage canister (i.e., to move the fuel into a new canister if monitoring identifies the need to replace the old canister). The DTS is used on an as-needed basis and would likely be built sometime after the ISFSI begins operations and would be used over the life of the ISFSI.

The potential impacts from transportation of spent fuel from an away-from-reactor ISFSI to a repository are evaluated in Chapter 6 as part of cumulative impacts. Transportation of spent fuel to an away-from-reactor storage facility is evaluated in Section 5.16.

The NRC does not evaluate the impacts of decommissioning of the away-from-reactor ISFSI and DTS in this chapter. The impacts of these activities are considered in the cumulative impacts analysis in Chapter 6.

For the short-term storage timeframe (see Section 1.8.2), the NRC evaluates the impacts of continued storage of spent fuel for 60 years beyond the licensed life for operations of a reference reactor. The NRC assumes that a repository would become available by the end of this 60-year timeframe.

Short-term storage of spent fuel for 60 years beyond licensed life for operations at an away-from-reactor ISFSI includes the following:

- construction and continued operation of the ISFSI,
- routine maintenance and monitoring of the ISFSI, and
- cask handling and transfers.

For the long-term storage timeframe, the NRC evaluates the impacts of continued storage for another 100 years after short-term storage. The NRC assumes that a repository would become available by the end of this 100-year timeframe and that the oldest fuel would be transferred to the repository first.

Long-term storage activities include the following:

- continued operation and routine maintenance and monitoring of the away-from-reactor ISFSI,
- construction and operation of a DTS[2], and

[2] A licensee would have to request authorization from the NRC to build and operate the DTS, either during initial licensing of the ISFSI, or as a later, separate action. As part of its review of such a request, the NRC would have to consider any associated environmental impacts under 10 CFR Part 51.

- one-time replacement of the ISFSI (i.e., replacement of casks and canisters, concrete pads, and canister transfer building) and the DTS (see Section 1.8.2).

For the indefinite storage timeframe, the NRC has also evaluated the environmental consequences within each resource area for a scenario assuming a repository does not become available, thus requiring indefinite onsite storage. Although the NRC believes that this scenario is highly unlikely (see Section 1.2 of this GEIS), impact determinations for indefinite storage and fuel handling at an away-from-reactor ISFSI have been made for each resource area. The activities associated with indefinite storage are the same as those for the long-term storage timeframe, except that they would occur repeatedly due to the lack of a repository. As discussed in Chapter 1, the ISFSI (i.e., casks and canisters, concrete pads, and canister transfer building) and the DTS would be replaced on a 100-year cycle.

Sections 5.1 through 5.19 evaluate potential impacts on various resource areas, such as land use, air quality, and water quality. Within each resource area, the NRC provides an analysis of the potential impacts and an impact determination − SMALL, MODERATE, LARGE − for each timeframe. For some resource areas, the impact determination language is specific to the authorizing regulation, executive order, or guidance.

5.1 Land Use

This section describes land-use impacts caused by the continued storage of spent fuel at an away-from-reactor ISFSI.

5.1.1 Short-Term Storage

The environmental impacts on land use from the construction and operation of an away-from-reactor storage facility are based on a facility similar to the PFSF (NRC 2001), built at a location selected based on the assumptions presented above. The ISFSI would be designed to store up to 40,000 MTU of spent fuel on a fenced 330-ha (820-ac) site. Storage pads for the canisters and some support facilities would be located on a 40-ha (99-ac) restricted access area within the site.

Construction activities associated with the ISFSI would be limited to the immediate area of the ISFSI site and would primarily consist of clearing, excavation, and grading of the 40-ha (99-ac) restricted access area where the storage pads and major buildings would be located. In addition, one or more access roads and a rail spur would likely have to be either built or improved. Based on its past experience and judgment, the NRC assumes that (1) disturbed areas around the ISFSI site and associated corridors would be graded and reseeded after

construction is completed, (2) permits[3] would require best management practices (BMPs) such as construction of flood diversion berms to control erosion and the installation of silt fencing and sediments traps to stabilize disturbed soils to reduce land-use impacts, and (3) the 40-ha (99-ac) restricted access area would be enclosed with chain-link security fencing. For the PFSF, the total amount of land disturbed for construction, including the access road and rail line, was 408 ha (1,008 ac) and the rail line represented more than three-quarters of the land disturbed. Of the land disturbed, 288 ha (713 ac) was to be revegetated after construction and 120 ha (295 ac) was expected to remain cleared; the rail line represented more than half of that value (NRC 2001). Although these numbers are specific to the PFSF analysis, based on the assumptions presented in the introduction to this chapter, they provide a reasonable representation of the amount of land disturbance that could be expected at another location because the rail line was fairly long at 51 km (32 mi).

Construction of any proposed ISFSI would change the nature of land use within the site boundary and along the access corridors. While this change would be qualitatively substantial (e.g., from agricultural to industrial), the land parcel is assumed to be sufficiently remote and relatively small (compared, for example, to any surrounding county) so that no quantitatively significant impact would occur. By way of comparison, for the proposed Levy Nuclear Plant, the NRC concluded that the land-use impacts for the plant (not including transmission lines) "would not noticeably alter the existing land uses within the vicinity and region." The Levy project (not including transmission lines) would have affected just over 405 ha (1,000 ac) (NRC 2012).

Operation of any proposed ISFSI would involve transportation of spent fuel from reactors to the ISFSI and receiving, transferring, and storing the spent fuel. Impacts on land use during ISFSI operations would create no additional impacts on land use beyond those for the construction of the facility. This generic analysis and associated findings are consistent with the findings for the PFSF (NRC 2001).

Based on its review, the NRC concludes that the impacts on land use from the construction and operation of an away-from-reactor ISFSI would be SMALL. This is because the land parcel for the ISFSI is assumed to be remote and relatively small.

5.1.2 Long-Term Storage

As discussed in the introduction to this chapter, the NRC assumes that a DTS is constructed as part of an away-from-reactor ISFSI. The NRC also assumes that the DTS will be built inside the confines of the ISFSI's 40-ha (99-ac) restricted area—a reasonable assumption considering the small area (0.04 ha [0.1 ac]) required for the DTS basemat and 0.7 ha (2 ac) for the DTS security zone. The DTS would be used to facilitate transfer of the spent fuel canister from one

[3] For example, the licensee of each site would have to obtain a National Pollutant Discharge Elimination System permit that would include requirements to minimize the impacts of stormwater runoff.

cask to another, retrieve and repackage spent fuel, or replace damaged canisters or casks identified during visual inspections. Construction and operation of a DTS at an away-from-reactor ISFSI would be based on Section 2.1.4 of this GEIS.

By comparison, the canister transfer building at the PFSF would have been a fully enclosed high-bay building equipped with cask transfer and handling equipment (e.g., overhead and gantry cranes) and radiation-shielded transfer cells for transferring the spent fuel canisters from transportation packages to the storage casks (NRC 2001). The building would have occupied about 0.5 ha (1.2 ac) within the 40-ha (99-ac) restricted access area where the storage pads, major buildings, and access roads would have been located (NRC 2001). It is possible such a building would be equipped or could be retrofitted with the necessary equipment for retrieval and repackaging of spent fuel. However, for the purposes of the analysis in this GEIS, the NRC assumes that a separate DTS will be constructed.

The NRC assumes that construction of a DTS would take 1 to 2 years based on a construction schedule similar to that for the canister transfer building at the PFSF, which was estimated to take approximately 18 months (NRC 2001). Construction equipment would be used to grade and level the DTS site and excavate the facility foundation. Construction of the DTS structures would disturb about 0.04 ha (0.1 ac) of land. In addition, the NRC expects that land adjacent to a DTS would be disturbed for a construction laydown area. Based on its past experience and judgment, the NRC assumes that after the construction of the DTS is completed (i.e., about 1 to 2 years), the construction laydown area would be reclaimed and revegetated. The DTS would be built within an area for which access is already restricted, and it would represent a small increase in the amount of land that is disturbed within that restricted area.

The NRC also assumes that aging management would require the replacement of an away-from-reactor ISFSI and DTS (i.e., the concrete storage casks and concrete storage pads, and canister transfer building) during the long-term timeframe. Replacement facilities would be constructed on land near the existing facilities. The old facilities would be demolished and the land reclaimed. Regardless, this land would be inside the 40-ha (99-ac) restricted area and it would be unavailable for other uses for as long as the ISFSI exists.

In conclusion, construction of a DTS would disturb a small portion of the land committed for an away-from-reactor ISFSI. Operational impacts would include continuing to restrict access to the facility site and use of the site for spent fuel transfer, handling, repackaging, and aging management activities. To minimize land-use impacts from replacing storage casks, storage pads, the canister transfer building, and the DTS, replacement facilities would likely be constructed on land near the existing facilities. Therefore, the NRC concludes that the impact on land use from long-term storage of spent fuel at an away-from-reactor ISFSI would be SMALL.

5.1.3 Indefinite Storage

This section describes the potential environmental impacts on land use if a repository is not available to accept spent fuel. For this analysis, the NRC assumes that spent fuel would continue to be stored at an away-from-reactor ISFSI indefinitely.

The environmental impacts on land use from continued operation of dry cask storage of spent fuel at an away-from-reactor ISFSI if a repository is not available would be similar to those described in Section 5.1.2. All operations and maintenance activities would occur inside the 40-ha (99-ac) restricted area, which would remain unavailable for other uses for as long as the ISFSI exists. These activities would occur repeatedly because the spent fuel would remain at the facility indefinitely.

In conclusion, continued storage of spent fuel in an away-from-reactor ISFSI indefinitely (i.e., if a repository is not available) would affect only a small portion of the total land area developed for the storage facility and would not change land-use conditions. Therefore, the NRC concludes that the environmental impacts on land use from indefinite storage of spent fuel at an away-from-reactor ISFSI would be SMALL.

5.2 Socioeconomics

This section describes socioeconomic impacts caused by the continued storage of spent fuel at an away-from-reactor ISFSI. Several types of impacts could occur, including impacts on economy, housing, and public services.

As discussed in Section 5.0, should the NRC receive an application for a proposed away-from-reactor ISFSI, the NRC would evaluate the site-specific impacts of the construction and operation of any proposed facility as part of that facility's licensing process. This review would consider impacts to socioeconomic conditions, including specific concerns attributable to the special conditions within a community.

5.2.1 Short-Term Storage

Construction activities would be temporary and would occur mainly within the boundaries of the ISFSI site. As discussed in the introduction to this chapter, the NRC used the characteristics of the PFSF (e.g., land area affected and size of workforce) in its analyses. There would be incremental changes to offsite services to support construction activities, such as the transportation of construction materials. Most of the construction workforce (255 workers at its peak) is expected to come from within the region, and those workers who might relocate to the region would represent a small percentage of the surrounding area's population base. Because of the relatively short duration of the construction project, few, if any, of the workers who migrate to work at the site would be accompanied by their families. As a result, the impacts on housing

and public services are expected to be minor. Aside from the direct impacts associated with the project, there would also be indirect impacts from jobs created in the area. For example, the purchase of goods by workers onsite and in the local community could create additional jobs. However, unlike jobs associated directly with the construction of the ISFSI, indirect jobs are more likely to be filled by local residents. Given the small number of construction workers, there would not be a noticeable increase in the demand for housing and public services. The economic impact on the local and regional economy would be minor.

During ISFSI operation, employees would continue to maintain, monitor, and inspect the facility. The NRC estimates that the number of operations workers would be around 43 based on the PFSF environmental impact statement (EIS) (NRC 2001). In contrast to construction, for which workers may or may not relocate, workers employed for the operation of the storage facility, if they were not from the local area, would be expected to move into the area with their families. Given the small number of operations workers, there would not be a noticeable increase in the demand for housing and public services. The impacts on the local and regional economy would be minor.

Local and State government agencies would receive tax payments from the ISFSI licensee. The impact of the payments would depend on a number of factors, including the pre-existing economic conditions. If the local jurisdiction(s) already have a substantial tax base, then the addition of taxes from the ISFSI would have a minor beneficial impact. But if the pre-existing local tax base was small, then the new tax revenue could have a significant beneficial impact. For the PFSF, the NRC concluded that there would be a large impact on the Skull Valley Band and on Tooele County from the payments made by PFS (NRC 2001). Based on the assumption that any away-from-reactor ISFSI would be built in an area with low population density, the NRC concludes that the increase in tax revenue could have a significant beneficial impact on the local economy, but the beneficial impacts beyond the host jurisdiction would be minor.

In the PFSF EIS, the NRC concluded that construction and operation of an away-from-reactor ISFSI would have a SMALL socioeconomic impact (NRC 2001). Considering the very sparse population around the PFS site (30 persons on the Reservation and a total of about 150 persons in all of Skull Valley), the NRC concludes that the socioeconomic impacts at any site of constructing and operating an away-from-reactor ISFSI would be similar to those described in the PFSF EIS. Based on the analysis above, construction and operation of an away-from-reactor ISFSI could generate potentially LARGE beneficial economic impacts in some rural economies as well as SMALL adverse socioeconomic impacts due to increased demand for housing and public services.

5.2.2 Long-Term Storage

A DTS constructed as part of an away-from-reactor ISFSI would be used to facilitate the replacement of spent fuel canisters as part of aging management practices. The construction of

the DTS would require a workforce smaller than that required for construction of an away-from-reactor ISFSI. Similar to the construction of the ISFSI, the workers would come from a combination of the existing workforce or commute into the area from surrounding communities, but workers would be unlikely to move into the area for DTS construction due to the short duration of the project. Therefore, the impacts from the construction of the DTS are bounded by those associated with the construction of the ISFSI discussed in Section 5.2.1.

A staged approach to aging management would require the replacement of an away-from-reactor ISFSI (i.e., the concrete storage casks, concrete storage pads, and canister transfer building) and replacement of the DTS during the long-term storage timeframe. The workforce required for the replacement of these structures and components would be similar to or less than the workforce required for the original construction of the ISFSI, depending on how the work is spread out over time. Therefore, the socioeconomic impacts of these workers would be similar to or less than the impacts of the original construction of the ISFSI. In addition, the operational and maintenance activities begun during the short-term timeframe would continue, as would the tax payments to local jurisdictions.

As discussed above, the impacts from long-term operation and maintenance of the ISFSI are bounded by those described in Section 5.2.1. Therefore, the NRC concludes the socioeconomic impacts on public services and housing from continued storage during the long-term timeframe would be SMALL. Beneficial impacts from property-tax payments could be LARGE in some rural economies.

5.2.3 Indefinite Storage

This section evaluates the socioeconomic impacts of away-from-reactor storage assuming a repository does not become available. The same operations and maintenance activities described in Section 5.2.2 occur repeatedly because the spent fuel remains at the facility indefinitely. Therefore, the NRC concludes that the socioeconomic impacts on public services and housing during the indefinite timeframe would be SMALL. Beneficial impacts from property-tax payments could be LARGE in some rural economies.

5.3 Environmental Justice

This section describes the potential human health and environmental effects on minority and low-income populations caused by the continued storage of spent fuel at an away-from-reactor ISFSI. See Sections 3.3 and 4.3 for discussion of the approach the NRC uses to evaluate issues related to environmental justice. The discussion in both sections is also applicable to the consideration of environmental justice for an away-from-reactor ISFSI. As explained in Section 4.3, the NRC strives to identify and consider environmental justice issues in agency licensing

and regulatory actions primarily by fulfilling its National Environmental Policy Act of 1969, as amended (NEPA) responsibilities for these actions.

In most cases, the NRC environmental justice analyses are limited to evaluating the human health effects of the proposed licensing action and the potential for minority and low-income populations to be disproportionately affected. As explained in the Commission's policy statement, issues related to environmental justice and demographic conditions (i.e., the presence of potentially affected minority and low-income populations) differ from site to site, and environmental justice issues and concerns usually cannot be resolved generically. In site-specific licensing actions, the NRC addresses environmental justice issues and concerns during environmental reviews by identifying potentially affected minority and low-income populations. Then, the NRC determines whether there would be any potential human health or environmental effects and whether these effects may be disproportionately high and adverse. Human health and environmental effects are defined in Section 3.3. Consequently, environmental justice, as well as other socioeconomic issues, is normally considered in site-specific environmental reviews (69 FR 52040). However, the NRC has determined that for the purposes of this GEIS a generic analysis of the human health and environmental effects of continued storage from the construction and operation of an away-from-reactor ISFSI on minority and low-income populations is possible. In addition, should the NRC receive an application for a proposed away-from-reactor ISFSI, a site-specific NEPA analysis would be conducted which would include consideration of environmental justice.

As previously stated in Chapters 2 and 3, this GEIS and the Rule are not licensing actions and do not authorize the continued storage of spent fuel. The environmental analysis in this GEIS fulfills a small part of the NRC's NEPA obligation with respect to the licensing or relicensing of an away-from-reactor ISFSI. Further, for site-specific licenses, the NEPA analysis would include consideration of environmental justice prior to any NRC licensing action. As with other resource areas, this site-specific analysis allows the NRC to make an impact determination for each NRC licensing action. For the purposes of this GEIS, a generic determination of the human health and environmental effects during continued storage at an away-from-reactor ISFSI is possible because the NRC understands how such a facility will be sited.

5.3.1 Short-Term Storage

The construction and short-term operation of an away-from-reactor ISFSI could raise environmental justice concerns. Should the NRC receive an application for a proposed away-from-reactor ISFSI, a site-specific NEPA analysis would be conducted, and this analysis would include consideration of environmental justice impacts per the Commission's policy statement.

During the environmental review for a proposed site-specific away-from-reactor ISFSI, the NRC would collect demographic information about nearby minority and low-income populations and any special characteristics (e.g., subsistence fishing) of those populations. The NRC would

collect this information to evaluate the potential for disproportionately high and adverse human health and environmental effects on those populations. During the PFSF review, the NRC concluded that "no disproportionately high and adverse impacts will occur to the Skull Valley Band or to minority and low-income populations living near the proposed rail routes from the proposed action" (NRC 2001).

For the analysis in this GEIS, it is not possible to define the characteristics of minority or low-income populations around a potential away-from-reactor ISFSI and associated transportation corridors. However, environmental justice would be one of the factors considered in the siting and licensing of any ISFSI. Using past licensing experience as an indicator, disproportionately high and adverse impacts on minority or low-income populations could be avoided through the siting process. If impacts were determined to be disproportionately high and adverse, the facility could be relocated or plans modified to mitigate any adverse effects. For example, the Louisiana Energy Services facility was originally proposed for a location in Louisiana. However, the applicant eventually decided to withdraw its application (LES 1998, NRC 1998) and select a different site for its facility. A key outstanding issue for the project was an environmental justice concern identified during the licensing review.

Potential impacts to minority and low-income populations from the construction and operation of an away-from-reactor ISFSI would mostly consist of environmental and socioeconomic effects (e.g., noise, dust, traffic, employment, and housing impacts). Noise and dust impacts from construction would be short-term and primarily limited to onsite activities. Minority and low-income populations residing along site access roads would be affected by increased commuter vehicle traffic during shift changes and truck traffic. However, these effects would be temporary during certain hours of the day and would not likely be high and adverse. Increased demand for rental housing during construction could disproportionately affect low-income populations. However, construction workers could commute to the site, thereby reducing the potential demand for rental housing.

Regarding visual impacts, the NRC expects the canister transfer building to be the largest building on the site. For the PFSF, this building would have been approximately 60 m (200 ft) wide, 80 m (260 ft) long, and 27 m (90 ft) high (NRC 2001). Using the 330-ha (820-ac) site area for the PFSF as a guide, the site boundary would be approximately 0.8 km (0.5 mi) from the facility. At this distance the NRC concludes that visual impacts on nearby residents would be minimal. Depending on the location of minority or low-income populations, these populations could experience an adverse impact. As stated in Section 5.14, impacts could range from SMALL to MODERATE. However, impacts are not expected to be disproportionately high and adverse.

As discussed in Section 5.12, in most instances, placement of facilities on a proposed site could be adjusted to minimize or avoid impacts on historic and cultural resources in the area, but the NRC recognizes that this is not always possible. The magnitude of adverse effects on historic

properties and impacts on historic and cultural resources largely depends on where the facilities are sited, what resources are present, the extent of proposed land disturbance, and if the licensee has management plans and procedures that are protective of historic and cultural resources. The NRC's site-specific environmental review and compliance with the National Historic Preservation Act (NHPA) process could identify historic properties, adverse effects, and potentially resolve adverse effects on historic properties and impacts on other historic and cultural resources. As discussed in Section 3.3, a disproportionately high and adverse environmental impact refers to an impact or risk of an impact on the natural or physical environment in a low-income or minority community that appreciably exceeds the environmental impact on the larger community. In assessing cultural environmental impacts, impacts that uniquely affect minority or low-income populations or American Indian tribes are also considered. Thus, the potential impacts on historic and cultural resources could be SMALL to LARGE depending on site-specific factors.

Regarding noise, in Section 5.13 the NRC concludes that impacts near the site could exceed U.S. Environmental Protection Agency (EPA)-recommended levels at times during construction and operations. If minority or low-income populations are located near the site boundary or transportation routes, they could be disproportionately affected; although the NRC concluded in Section 5.13 that the overall noise impacts could be SMALL. Therefore, the NRC does not expect that these impacts would be disproportionately high and adverse.

Radiation doses to surrounding populations would be maintained within regulatory limits (as provided in 10 CFR Part 20), ensuring minor impacts. In addition, the licensee is required by 10 CFR 72.44(d)(2) to implement an environmental monitoring program to ensure compliance with effluent limitations. Based on a review of recent radiological environmental monitoring program reports, human health impacts would not be expected in special pathway receptor populations living near a nuclear power plant as a result of subsistence consumption of water, local food, fish, or wildlife during continued storage of spent fuel. Unlike the operation of nuclear reactors, the operation of the ISFSI is not expected to have any routine radiological effluents. Therefore, the results for reactors bound the results for the away-from-reactor ISFSI, and the NRC concludes that there would not be any disproportionately high and adverse radiological human health or environmental impacts on any minority or low-income populations in the area.

Siting of an away-from-reactor ISFSI would be expected to ensure that environmental justice concerns are addressed prior to licensing. As discussed for the other resource areas, overall human health and environmental effects from construction and from the continued storage of spent fuel during the short-term timeframe would be limited in scope and SMALL for all populations, except for air quality, terrestrial resources, aesthetics, historic and cultural resources, and socioeconomic and traffic conditions. Short-term storage impacts to each of the affected resource areas are discussed elsewhere in this chapter. Based on this information and the analysis of human health and environmental impacts discussed for other resource areas in

this chapter, minority and low-income populations are not expected to experience disproportionately high and adverse human health or environmental effects from the construction and operation of an away-from-reactor ISFSI during the short-term timeframe.

5.3.2 Long-Term Storage

The construction of a DTS would occur within the facility boundaries. NRC authorization to construct and operate a DTS and replace the ISFSI and DTS would constitute Federal actions under the NEPA and would be addressed through site-specific reviews that would include an analysis of the potential human health and environmental effects on minority and low-income populations. The environmental review for the DTS would not rely on the analysis in this GEIS, because the site-specific NEPA analysis would consider the site-specific impacts on minority and low-income populations.

Impacts from construction of the DTS would include the potential for an increase in labor demand similar to that described under the initial construction of the away-from-reactor facility, although on a somewhat smaller scale (60 to 80 workers, see Sections 4.2.2 and 4.3.2). The activities associated with building an away-from-reactor ISFSI are described in the PFSF EIS (NRC 2001). Because building the DTS is a much smaller project and would occur within the ISFSI protected area, the description from the PFSF EIS activities bound the activities necessary to build the DTS. Therefore, the NRC concludes that the impacts from construction of the DTS would be bounded by the impacts from the construction of the away-from-reactor ISFSI, as discussed in Section 5.3.1.

Aging management would include continued monitoring, maintenance, and a staged approach to replacement of ISFSI facilities and components (i.e., casks, pads, and canister transfer building) and the DTS. Activities associated with aging management are described in Sections 4.1.2, 4.15.2, and 5.1.2. These activities would occur over the duration of operation and be contained within the restricted area of the ISFSI. In addition, the dose at the site boundary would decrease over time because of the decay of the radioactive materials in storage.

As discussed for the other resource areas, overall human health and environmental effects from continued storage during the long-term timeframe would be limited in scope and SMALL for all populations, except for aesthetics, historic and cultural resources, socioeconomic, and traffic conditions. Long-term storage impacts to each of the affected resource areas are discussed elsewhere in this chapter. Due to the passive nature of operations, the temporary nature of any construction associated with the DTS and replacement of the ISFSI and the DTS, and based on the analysis in Section 5.3.1, the NRC concludes that minority and low-income populations are not expected to experience disproportionately high and adverse human health and environmental effects from continued storage during the long-term timeframe.

5.3.3 Indefinite Storage

The human health and environmental effects on minority and low-income populations from continued storage during the indefinite timeframe would be the same as the impacts for long-term storage, as described in Section 5.3.2, except for nonradioactive waste generation and disposal. Indefinite storage impacts associated with nonradioactive waste are summarized later in this chapter. The only difference is that the activities required for maintenance and replacement of the ISFSI and the DTS would be repeated indefinitely. Therefore, the NRC concludes that minority and low-income populations are not expected to experience disproportionately high and adverse human health and environmental effects during the indefinite storage timeframe.

5.4 Air Quality

This section describes air quality impacts caused by the continued storage of spent fuel at an away-from-reactor ISFSI. See Section 3.4.3 for additional information regarding air quality standards.

5.4.1 Short-Term Storage

For the purposes of its analysis of air quality impacts in this GEIS, the NRC will use the information regarding the emissions from construction and operations activities at the PFSF (e.g., construction vehicles, land disturbance, fuel receipt, and routine maintenance and monitoring), because they would be representative of the activities and air emission levels of a similar away-from-reactor ISFSI, regardless of location. In the PFSF EIS (NRC 2001), the NRC examined air quality impacts related to construction and operation of an away-from-reactor ISFSI with a capacity of 40,000 MTU, as well as the construction of a rail spur to transport spent fuel to and from the ISFSI, located in a National Ambient Air Quality Standards attainment area. Fugitive dust would have the greatest influence on air quality during construction. As stated in the PFSF EIS, the magnitude of the impact depends in part on the proximity to receptors. For the construction analysis for the onsite facilities the PFSF EIS concluded that the impacts were SMALL. Atmospheric concentrations of particulate matter with an aerodynamic diameter of 10 microns or less (PM_{10}) were modeled between 1.1 km (0.7 mi) from the center of the proposed facility (i.e., the distance to the nearest publicly owned land) and 3.5 km (2.2 mi) from the center of the proposed facility (i.e., the distance to the nearest residence). Emissions from vehicles were also considered. A maximum of ten equipment operators were expected to be onsite at any one time, and emissions from construction-related equipment were expected to be small. However, due to the large extent of the disturbed area, fugitive dust emitted from excavation and earthwork could lead to local increases in particulate matter concentrations. In its analysis for the PFSF, the NRC made conservative assumptions including the following:

- The entire site area of 30 ha (75 ac) would undergo heavy construction at the same time.

- Construction was assumed to occur continuously during a 9-hour shift (8 a.m. to 5 p.m. each day).
- Background sources of dust from within a 50-km (32-mi) radius of the site were added to the construction-related dust.
- No mitigation was assumed as a result of natural obstructions (e.g., mountains) that exist between background sources and the PFSF site.

Even when the construction was assumed to be as intensive as that assumed for the PFSF, the modeled concentrations of particulate matter from PFSF construction activities were below the regulatory standards associated with the allowable increases in emission levels for individual projects (i.e., Prevention of Significant Deterioration Class II limits under the Clean Air Act).

For the rail-spur construction analysis, the PFSF EIS concluded that the temporary and localized effects of fugitive dust could produce MODERATE impacts in the immediate vicinity where the rail spur and Interstate 80 were near each other and SMALL impacts elsewhere. Atmospheric concentrations of PM_{10} were modeled for a total area of 5 ha (12.4 ac) where the rail line ran approximately parallel to Interstate 80 and the rail spur was as close as 50 m (164 ft) to the highway. Dust levels were noticeable, and dust control mitigation measures (e.g., surface wetting) were included to ensure compliance with National Ambient Air Quality Standards.

For an away-from-reactor ISFSI, the NRC assumes that, if necessary, any site-specific permits would include appropriate mitigation to ensure that impacts would not be destabilizing to local air quality. An applicant would also have to comply with the requirements of the General Conformity Rule (Section 176 of the Clean Air Act) if the area in which the ISFSI is to be built has not met the National Ambient Air Quality Standards. Thus, the Clean Air Act permitting process provides a regulatory mechanism to ensure that particulate concentrations created by ISFSI construction would be held below regulatory standards and mitigated as appropriate to protect ambient air quality.

The construction of an away-from-reactor ISFSI of the size assumed by the NRC in the introduction to this chapter of the GEIS would generate emissions similar to those evaluated in the PFSF EIS because similar activities would have to be carried out at the generic facility. Based on the emission levels associated with continued storage, construction impacts would depend on the proximity of the receptor to the emission-generating activities. The NRC expects that noticeable impacts resulting from the proximity between emission sources and receptors would more likely be associated with rail-spur construction rather than ISFSI facility construction because of the distance between the ISFSI construction activities and the site boundary. Therefore, the NRC concludes that for an area that is in attainment for the National Ambient Air Quality Standards, the construction impacts could range from not noticeable to noticeable but not destabilizing.

The NRC also considered how construction-related emissions might affect areas designated by the EPA as "maintenance" or "nonattainment" for criteria pollutants.[4] Estimated annual emissions of criteria pollutants at the PFSF were much lower than *de minimis* levels described in 40 CFR 93.153, "Applicability." For example, the applicant for the PFSF estimated that emissions of nitrogen oxides, a precursor to ozone, would have been less than 10 T/yr (PFS 2001). The *de minimis* level of emissions in even an extreme nonattainment area for ozone is 10 T/yr.

Based on the emission levels discussed above, the NRC concludes that the air quality impacts related to construction of an away-from-reactor ISFSI could range from not noticeable to noticeable but not destabilizing in any air quality region. Noticeable but not destabilizing impacts, if they occur, would be due to fugitive dust emissions in the areas immediately adjacent to the rail-spur construction activities.

As stated in the PFSF EIS (NRC 2001), during operations the PFSF would not have been a "major stationary source" of air emissions as defined in 40 CFR 52.21(b). The PFSF analyses considered emissions from sources such as space heaters, emergency generators, and a concrete batch plant, as well as vehicle emissions, and stated that if the emissions from these sources were combined, the total would not be expected to exceed the significance levels for Prevention of Significant Deterioration analysis specified in 40 CFR 51.166(b)(23)(i). The PFSF EIS concluded that the operations impacts on air quality would be SMALL. The NRC determined that the results of this PFSF EIS would be applicable to any away-from-reactor ISFSI with a similar 40,000-MTU capacity because the types of emission-generating activities and associated emission levels would be similar. Therefore, the NRC concludes that the air quality impacts from the operation of the ISFSI would be minor.

Transportation of spent fuel from reactor sites to the away-from-reactor ISFSI could also contribute to air quality impacts. In the PFSF EIS, the NRC stated that the locomotives using the rail line would have emitted pollutants in any one area for a very short period before moving on. The NRC concluded that the associated air quality impacts would be small (NRC 2001). For the analysis of an away-from-reactor ISFSI in this GEIS, the NRC concludes that the basis for the PFSF conclusion would be applicable to any ISFSI because the same amount of fuel would have to be transported over similar distances. Therefore, the air quality impacts associated with the transportation of spent fuel to the site would be minor.

---

[4] The EPA designates an area as "nonattainment" generally based upon air quality monitoring data or modeling studies that show the area violates, or contributes to violations of, the national standard. After a nonattainment area's air quality improves so that it is no longer violating or contributing to violations of the standard, and the State or Tribe adopts an EPA-approved plan to maintain the standard, the EPA can redesignate the area as attainment. These areas are known as "maintenance" areas. See also Section 3.4.3.

Overall, the NRC concludes that the air quality impacts from the construction and short-term operation of an away-from-reactor ISFSI would be SMALL to MODERATE. MODERATE impacts, if they occur, would be due to fugitive dust emissions in the areas immediately adjacent to the rail-spur construction activities.

5.4.2 Long-Term Storage

Activities associated with aging management of spent fuel in dry casks (e.g., cask repair, bare fuel handling as part of repackaging operations, and replacement of the ISFSI and the DTS) are expected to be of relatively short duration and limited extent. These activities are likely to involve only a portion of the ISFSI and would likely involve, in any year, only a fraction of the air emissions that were associated with initial construction of the ISFSI. Maintenance of the rail spur would also occur during long-term storage. As a result, there may be temporary increases in levels of fugitive dust from construction and refurbishment activities. But the impacts on air quality would be less than those of initial construction because the work would be performed in stages over an extended period of time, as needed.

The NRC assumes that a DTS would have to be constructed and replaced during the long-term storage timeframe. However, as discussed in Section 5.1, the DTS is a relatively small facility and the air quality impacts associated with its construction would be a fraction of the impacts associated with the original construction of the ISFSI. Exhaust from vehicles for commuting workers and material transportation would add to levels of hydrocarbons, carbon monoxide, and nitrogen oxides. However, these emissions would be less than those during the construction period and are not expected to noticeably affect air quality in the region.

Overall, the NRC concludes that the impacts on air quality would be SMALL for all location classifications (i.e., attainment, nonattainment, and maintenance).

5.4.3 Indefinite Storage

This section evaluates the air quality impacts of away-from-reactor storage, assuming a repository does not become available. The same activities described in Section 5.4.2 would occur repeatedly because the spent fuel would remain at the facility indefinitely. Therefore, the NRC concludes that the impacts on air quality associated with continuing spent fuel storage for an indefinite period would be SMALL for all location classifications (i.e., attainment, nonattainment, and maintenance).

5.5 Climate Change

In this section, the NRC evaluates the effect of continued storage at an away-from-reactor ISFSI on climate change. The NRC's evaluation of the effects of climate change on the intensity and frequency of natural phenomena hazards that may cause spent fuel storage accidents is provided in Sections 4.18.

5.5.1 Short-Term Storage

The issue of climate change was not specifically addressed in the PFSF EIS. Therefore, for the purposes of this GEIS, the NRC assumes that the greenhouse gas emission levels released from the construction and operation of a 1,000-MW(e) reference reactor would bound those associated with a 40,000-MTU ISFSI (NRC 2013b). Construction and operation of light water reactors involves, among other things, substantial earthwork and soil dewatering, concrete batch plant operations, making and emplacing many thousands of metric tons of concrete, ironworks, lifting and rigging construction materials and equipment, material transportation, equipment maintenance, demolition, and workforce transportation. Because these activities are of a far greater scale than that for an away-from-reactor ISFSI, the greenhouse gas emission levels from the construction and operation of a 1,000-MW(e) reference reactor bound the emissions from the construction and operation of an away-from-reactor ISFSI.

In its "Interim Staff Guidance on Environmental Issues Associated with New Reactors, Attachment 1: Staff Guidance for Greenhouse Gas and Climate Change Impacts for New Reactor Environmental Impact Statements" (NRC 2013b), the NRC categorized emission levels by project phases. The NRC assumed a 7-year construction period, which would generate a total of 82,000 MT of carbon dioxide (CO_2) equivalent (approximately 12,000 MT/yr). The analysis assumed an average workforce of 1,000 workers, which is roughly 4 times the number of workers assumed to build the ISFSI. Although the new reactor analysis did not include transport of supplies and waste materials, which would also generate greenhouse gases during construction, the number of vehicles transporting workers to a new reactor construction site vastly exceeds the number of vehicles transporting supplies and materials. Therefore, the 4:1 ratio between workers at a new reactor construction site and an ISFSI construction site still provides a very conservative, bounding calculation of 12,000 MT/yr in greenhouse gas emissions, even including the emissions from the transport of supplies and waste materials for the ISFSI. For the PFSF, Phase 1 of the construction, which was to encompass the bulk of construction, was scheduled for 18 months. Using a conservative estimate of 2 years, construction of the ISFSI would lead to greenhouse gas emissions of about 24,000 MT.

For a reactor during the operations period, the NRC estimated a workforce of 550 and total CO_2 emissions (including emissions from support equipment) of 317,000 MT over 40 years. This equates to approximately 8,000 MT/yr (NRC 2013b). Similar to the construction estimate,

the new reactor analysis did not include transport of supplies and waste materials that would also generate greenhouse gases during operations. However, the workforce assumed for the reactor is about 10 times the workforce that would be needed for the ISFSI and there is more support equipment (e.g., emergency diesel generators) at the reactor as well. Therefore, for the purposes of estimating the impacts for the ISFSI, the 8,000 MT/yr produced by an operating reference reactor is a conservatively high number.

Transportation of spent fuel from the reactor sites to the away-from-reactor ISFSI would also involve emissions of CO_2.[5] A similar issue was considered in the U.S. Department of Energy (DOE) EIS for Yucca Mountain (DOE 2002) and DOE's 2008 Final Supplemental EIS for Yucca Mountain (DOE 2008). These EISs considered the transportation of 70,000 MTU of spent fuel from reactor sites over a 50-year operational period, as opposed to the 40,000 MTU assumed by the NRC for the away-from-reactor ISFSI over a 20-year operational period. In its 2008 Final Supplemental EIS, DOE determined that the movement of the fuel would add less than 0.0006 percent to overall national CO_2 emissions in 2005. The NRC reviewed the analysis performed by DOE and determined that it was generally consistent with NRC and Council on Environmental Quality regulations and NRC guidance for completeness and adequacy (NRC 2008a). Because the annual amount of spent fuel going to an away-from-reactor ISFSI (2,000 MTU/yr based on shipping 40,000 MTU in 20 years) is a factor of 1.4 greater than the annual amount considered in the Yucca Mountain EIS (1,400 MTU/yr based on shipping 70,000 MTU in 50 years) and emissions are proportionate to the amount of fuel shipped, the emissions from the transportation of spent fuel from reactors to the away-from-reactor ISFSI would be less than double the low proportion (less than 0.0006 percent) of national CO_2 emissions calculated in the Yucca Mountain Final Supplemental EIS. Because this transportation adds only slightly to existing traffic, and because emissions would be dispersed over a wide area between the reactor sites and the ISFSI, the NRC concludes that the greenhouse gas emissions impacts from the transportation of that spent fuel would be minor.

The total emissions associated with constructing (2 years at 12,000 MT/yr) and operating the facility over the short-term timeframe of 60 years (60 years at 8,000 MT/yr) would be 504,000 MT; the average emissions rate would be about 8,200 MT/yr. The annual emission values for the various phases represent a small percentage of the total U.S. annual emission rate of 6.7 billion MT CO_2 equivalent in 2011 (EPA 2013a). To put the annual emissions in context, 8,200 MT CO_2 equivalent would be approximately equal to the annual emissions from 1,640 passenger vehicles (EPA 2013b). During the construction period, when emissions are higher than the average, the 12,000 MT CO_2 equivalent would be approximately equal to the annual CO_2 equivalent emissions from 2,400 passenger vehicles.

[5] As indicated in the introduction to this chapter, the potential impacts from transportation of spent fuel from an away-from-reactor ISFSI to a repository are not evaluated in this section.

The NRC concludes that the relative contribution of an away-from-reactor ISFSI to greenhouse gas emission levels would be SMALL.

5.5.2 Long-Term Storage

Activities associated with aging management of spent fuel in dry casks (e.g., cask repair, construction of the DTS, bare fuel handling as part of repackaging operations, and ISFSI and DTS replacement) are expected to be of relatively short duration and limited extent. These activities are likely to involve only a portion of the ISFSI, and would likely involve, in any year, only a fraction of the greenhouse gas emissions associated with initial construction of the storage facilities (see Sections 5.1.2 and 5.4.2). Therefore, the NRC concludes that the relative contribution of spent fuel transfer, handling, and aging management activities to greenhouse gas emission levels during the long-term timeframe would be SMALL, for the same reasons stated in Section 5.5.1.

5.5.3 Indefinite Storage

This section describes the environmental impacts on climate change if spent fuel must be stored indefinitely. Ongoing transfer, handling, and aging management activities would continue indefinitely, the ISFSI and DTS would be replaced, and the spent fuel would be repackaged every 100 years. The main difference when compared to the impacts described in Sections 5.5.1 and 5.5.2 is that without a repository these activities would occur on an ongoing basis over a longer period of time. However, the annual emission levels for the various phases would remain the same.

The NRC concludes that the relative contribution of an away-from-reactor ISFSI to annual greenhouse gas emission levels during the indefinite timeframe would be SMALL, the same as the emissions discussed in Section 5.5.2.

5.6 Geology and Soils

This section describes geology and soils impacts caused by the continued storage of spent fuel at an away-from-reactor ISFSI.

5.6.1 Short-Term Storage

Construction impacts associated with away-from-reactor storage include earth clearing and foundation laying for the ISFSI, both of which may contribute to soil erosion. As discussed in the introduction to this chapter, these activities would be similar to those described in the PFSF EIS, regardless of the location of the ISFSI. As described in the PFSF EIS, the environmental impacts on soils would have included the loss of soils as a result of physical alterations to the existing soil profile. These alterations would have led to a reduced availability to support plant

and animal life and could have led to changes in erosion patterns and characteristics that affect how water infiltrates into the soil (NRC 2001). However, in the PFSF EIS, the NRC concluded that these losses are a small percentage of the similar available soils in the valley. The NRC also noted that soils used in project construction are recoverable upon facility decommissioning, and that no excess soils would be generated that require shipment or disposal offsite. Similarly, economic geologic resources (such as minerals, oil, and gas, if any) that would be unavailable for exploitation during facility construction and operation are widely available elsewhere in the region.

As discussed in Section 5.1, the amount of land committed to the away-from-reactor ISFSI is relatively small compared, for example, to the land available in a typical county. The methods necessary to control soil erosion are well understood and local permits typically require the implementation of erosion controls. Because of the relatively small size of the facility, restrictions on access to geologic resources under the ISFSI site would also be minimal. For these reasons, the NRC concludes that the impacts on soils and geologic resources from the building and short-term operation of an away-from-reactor ISFSI would be SMALL.

5.6.2 Long-Term Storage

The NRC expects that the construction of a DTS (see Chapter 2 for further details) will have minimal impacts on geology and soils due to the small size of the facility (about 0.7 ha [2 ac] for the DTS security zone). The types of impacts on soils would be similar to those anticipated for any power plant facility construction. Due to the relatively small size of the DTS, the impacts would be limited to the immediate area. Also, any laydown areas associated with construction would be reclaimed once the construction phase was complete.

It is assumed that ISFSI pads and supporting facilities (e.g., canister transfer building) would require replacement during the long-term storage timeframe and would occur on land near existing facilities. It is not anticipated that the overall land disturbed would increase because the old facility location would be demolished and the land would likely be reclaimed. Even if the land is not reclaimed, it has no further impact on soils and geologic resources because all of the activities would occur inside the 40-ha (99-ac) restricted area. The operations phase of any ISFSI is not anticipated to have any additional impacts on soils above those associated with construction.

In general, while the geological characteristics of the site and vicinity are essential to the safe design and operation of the ISFSI, continued storage of spent fuel does not have a significant environmental impact on geological resources (such as, damage to unstable slopes, adjacent utilities, or nearby structures).

The construction, operation, and replacement of a DTS would have minimal impacts on soils on the small fraction of the land committed for the facility. There are no anticipated impacts on the

geology of an area as the result of either the construction or operation of a DTS. Therefore, the NRC concludes that the environmental impact on geology and soils due to transfer, handling, and aging management of fuel during the long-term storage timeframe would be SMALL.

5.6.3 Indefinite Storage

In this section, the impacts on geology and soils are evaluated for away-from-reactor storage assuming a repository does not become available. The same operations and maintenance activities described in Section 5.6.2 would occur repeatedly because the spent fuel would remain at the facility indefinitely.

An away-from-reactor storage facility would have no additional impact if a repository is not available; therefore, the NRC concludes that the impacts on geology and soils from indefinite storage would be SMALL.

5.7 Surface-Water Quality and Use

This section describes surface-water quality and use impacts caused by the continued storage of spent fuel at an away-from-reactor ISFSI.

5.7.1 Short-Term Storage

Construction of an away-from-reactor ISFSI would require modification of the surface drainage to accommodate increased locally generated stormwater resulting from land cleared of vegetation and the increased area of impervious cover resulting from paved roads, buildings, and thick concrete pads on which spent fuel casks would be placed (NRC 2001). The types of activities carried out at the ISFSI that could affect surface water would be similar to those activities described for the PFSF based on the assumptions presented in the introduction to this chapter.

For the PFSF site, the NRC noted that BMPs would have been used to address stormwater flows, soil erosion, and siltation throughout the construction period. The NRC determined that, during construction, implementation of BMPs would have resulted in impacts on surface-water quality that would have been SMALL. The NRC also determined that, in the unlikely event that severe flooding occurred during the construction period (when the ground-disturbing activities would have made the soil more mobile), impacts on the surface-water hydrological system would have been SMALL to MODERATE.

The methods necessary to control impacts on surface-water quality during the construction of the ISFSI are well understood and local permits typically require the implementation of these controls. Stormwater control measures, which would be required to comply with National Pollutant Discharge Elimination System (NPDES) permitting, would minimize the flow of

disturbed soils or other contaminants into surface waterbodies. The licensee could also implement BMPs to minimize erosion and sedimentation. The NRC concludes that under normal circumstances, the impacts on surface-water quality would be minor. Depending on the characteristics of the specific location, unforeseen storm events could cause periods during which surface water could be noticeably affected by runoff, erosion, and sediment loads. However, these events would be of short duration, after which water quality would return to normal.

During construction, the PFSF would have used from about 102 m^3/d (19 gpm) to more than 520 m^3/d (96 gpm) of water (NRC 2001). The water requirements for an away-from-reactor ISFSI would be similar because of its similar size. These water requirements could be met by a combination of groundwater, surface water, or water delivered to the site (by truck or from a local municipal water system). The amount of water required is relatively small. For example, a large power plant with cooling towers might consume approximately 54,500 m^3/d (10,000 gpm) during operations. During the operational period, the away-from-reactor ISFSI would be in a passive state and water use would be much lower than during the construction period. The PFSF would have used about 6.8 m^3/d (1.3 gpm) during operations. Activities would be limited to cask emplacement and site maintenance with very little water use. Transportation of the spent fuel to the ISFSI would not have any impacts on surface-water use or quality. For these reasons, the potential impacts on the surface-water flow system, water availability, and water quality during ISFSI operation are generally expected to be minor.

For construction and operation of the away-from-reactor ISFSI, the NRC concludes that the overall impacts on surface-water use and quality would be SMALL. Although there is a possibility of noticeable impacts during unusual storm events during construction, such impacts would be short-lived before the surface waterbody would return to normal conditions. Therefore, even taking into consideration the impact of such unusual storm events, the overall impact would be SMALL.

5.7.2 Long-Term Storage

The construction and operation of a DTS (see Chapter 2 for further details) is anticipated to have minimal impacts on surface-water resources due to the small size of the facility (about 0.7 ha [2 ac] for the DTS security zone) compared to the ISFSI restricted area (40 ha [99 ac]).

The construction and operation of a DTS involves very little consumptive use of water, and this use would be intermittent. Given the relatively smaller size of the DTS compared to a 40,000-MTU away-from-reactor ISFSI, much less water would be required to build the DTS than would be used to construct the ISFSI. Therefore, the consumptive water use for construction and operation of the DTS would be minor.

With regard to storage facility replacement activities, the consumptive water use would be no greater than that identified for initial construction of the facilities, which would have only a minor impact on water availability.

The NRC assumes that the ISFSI and DTS would require replacement during the long-term storage timeframe and that replacement structures would be constructed on land near existing facilities. It is not anticipated that the overall land disturbed would increase because the old facility location would be demolished and the land would likely be reclaimed. This alternating location pattern minimizes the total land disturbed, which would limit the flow of disturbed soils or other contaminants into surface waterbodies. Based on the preceding analysis, expected impacts on surface-water resources would be similar to those in Section 5.7.1, SMALL.

5.7.3 Indefinite Storage

If no repository becomes available, away-from-reactor dry cask storage of spent fuel would continue indefinitely. As a result, the potential impacts on surface-water resources would be similar to those described in Section 5.7.2 because the same operational activities would be happening at the storage site. Every 100 years, surface water would be needed for demolishing and replacing concrete pads and other possibly degraded facilities. This additional consumptive use would be temporary. Therefore, the NRC concludes that the potential impacts on surface-water use and quality if a repository is not available would be SMALL.

5.8 Groundwater Quality and Use

This section describes groundwater-quality and -use impacts caused by the continued storage of spent fuel at an away-from-reactor ISFSI.

5.8.1 Short-Term Storage

Construction of an away-from-reactor ISFSI would require only shallow excavations for the concrete pad foundation and all structures for ISFSI facilities would be at or near the ground surface.

The water-use requirements for the away-from-reactor ISFSI would be similar to those for the PFSF because of its similar size. This water could be obtained from groundwater sources. For the PFSF site, the NRC noted that water use during construction would have varied from about 102 m^3/d (19 gpm) to more than 520 m^3/d (96 gpm) (NRC 2001), as discussed in Section 5.7.1. For an away-from-reactor ISFSI, these water requirements could be met by a combination of groundwater, surface water, or water delivered to the site (by truck or from a local municipal water system). The amount of water required is relatively small. For example, a large power plant with cooling towers might consume approximately 54,500 m^3/d (10,000 gpm) during operations. In the PFSF EIS (NRC 2001), the NRC determined that environmental impacts from

consumptive use of groundwater during construction of the proposed facility would have been SMALL. Because of the relatively small amount of consumptive water use and the ability to obtain water from multiple sources, the NRC concludes that the impacts of consumptive use of groundwater for an away-from-reactor ISFSI would be minor.

Potential impacts on groundwater quality would be expected to originate through seepage from ground-surface features, such as contaminants in runoff from the concrete pad surfaces and overlying surface waterbodies. The potential impacts on groundwater quality from an away-from-reactor ISFSI would depend on local conditions. The methods to control impacts on groundwater quality are well understood and local permits typically require the implementation of these controls. Under these permits, licensees would be required to implement BMPs to mitigate any potential impacts on groundwater from fuels and other ground-surface contaminants. For this reason, the NRC concludes that the impacts on groundwater quality would be minor. By way of comparison, the impacts on groundwater quality from the PFSF construction were determined by the NRC to be SMALL, given the depth to groundwater (about 38 m [125 ft]) and mitigation afforded by the PFS BMP plan. Groundwater-quality impacts during PFSF operation were also deemed to be SMALL. This finding included consideration of operation of a surface-water detention basin, two planned septic systems with leach fields, and storage of onsite vehicle fuel.

Transportation of the spent fuel to the ISFSI would not have any impacts on groundwater use or quality.

Based on the considerations discussed above, the NRC concludes that the impacts on groundwater use and quality from construction and short-term operation of the away-from-reactor ISFSI would be SMALL.

5.8.2 Long-Term Storage

To accomplish spent fuel repackaging into new canisters, the NRC assumes that a DTS would be required, as described in Chapter 2. The environmental impacts on groundwater from constructing a DTS would be smaller than those considered for construction of the away-from-reactor ISFSI (Section 5.8.1) because of the small area of land affected. Likewise, the impacts of replacing the ISFSI and the DTS over time would be no more than the impacts of the initial construction of the facility because they involve similar activities and would likely occur over a longer period of time. As a result, the NRC concludes that the impacts on groundwater use and quality of long-term storage of spent fuel would be SMALL.

5.8.3 Indefinite Storage

If a repository does not become available, then activities described in Section 5.8.2 would continue indefinitely, including replacement of the ISFSI and DTS every 100 years. The

potential environmental impacts on groundwater would be similar to those discussed in Section 5.8.2. Therefore, the NRC concludes that the potential environmental impacts on groundwater use and quality due to indefinite storage of spent fuel at an away-from-reactor ISFSI would be SMALL.

5.9 Terrestrial Resources

This section describes terrestrial resource impacts caused by the continued storage of spent fuel at an away-from-reactor ISFSI.

5.9.1 Short-Term Storage

Construction of an away-from-reactor ISFSI that would affect terrestrial ecology involve land clearing, grading, and building facilities, including access roads and a rail spur. During construction of an away-from-reactor dry cask storage facility, vegetation would be most affected by the direct removal of trees, plants, shrubs, and grasses and by replacing some of the cleared land with structures and ancillary facilities, including access roads. These removal activities could result, to varying degrees, in reduction of available wildlife habitat and food; modification of existing vegetative communities; and potential establishment or spread of invasive plant species. Parts of the disturbed areas would be replanted with some mixture of native and non-native plant species. Terrestrial wildlife would be most affected by habitat loss or alteration, displacement of wildlife, and incremental habitat fragmentation, all of which can lead to direct and indirect mortalities. However, in general, most wildlife would disperse from the project area when construction activities begin nearby and may recolonize in adjacent, undisturbed areas. In addition, wildlife could be disturbed by noise from construction equipment and vehicle traffic. Collisions with vehicles could be responsible for direct mortality of both large and small animals.

The NRC evaluated site-specific construction impacts on terrestrial ecological resources from an away-from-reactor dry storage facility as part of the PFSF EIS (NRC 2001). Based on the assumptions presented in the introduction to this chapter, land-disturbing activities for an away-from-reactor ISFSI would be of a similar magnitude. For the PFSF, the NRC evaluated the clearing of 94 ha (232 ac) for the main facility and access road, of which 37 ha (92 ac) were to be revegetated after construction and 57 ha (140 ac) were to remain cleared for the life of the project. The PFSF also required the addition of a 51-km (32-mi) rail line that involved the clearing of 314 ha (776 ac), of which 251 ha (621 ac) were to be revegetated after construction and 63 ha (155 ac) were to remain cleared for the life of the project (NRC 2001). The proposed PFSF, located in an arid, shrub-saltbush vegetation community, was expected to store as many as 4,000 canisters in individual storage casks to store a maximum of 40,000 MTU of spent fuel. The PFSF had drainages in the area that were ephemeral. However, no wetlands were on or near the proposed PFSF, and there would have been no direct impacts on wetlands from

construction (NRC 2001). It is likely that an away-from-reactor storage facility would also be located in an area away from sensitive perennial and wetland habitats to satisfy laws such as the Endangered Species Act (ESA) and the Clean Water Act (for wetlands). However, in some locations sensitive terrestrial features may be unavoidably affected.

The NRC concluded that the direct impact on vegetation from clearing vegetation and disrupting the ground surface from the proposed PFSF would have been SMALL because no unique habitats occur in the proposed project area (NRC 2001). The NRC further concluded that vegetation removal impacts that reduce habitat, alter prey-predator relationships, and force animals to leave the area would have been SMALL. The NRC also concluded that indirect impacts from the proposed PFSF, including surface-water runoff from impermeable surfaces, restricting large animal movement, construction noise, introduction on non-native plant species, groundwater withdrawal effects on vegetation, and ground and vegetation disturbances from trucks and associated fugitive dust, would also have been SMALL (NRC 2001).

For an away-from-reactor ISFSI at a different location, the impacts on terrestrial resources could be different from those at the PFSF. However, certain factors tend to limit the impacts, including the following:

- The land area permanently disturbed is relatively small.
- Any impacts on wetlands must be addressed under the Clean Water Act and, if wetlands are present, the applicant must demonstrate that the proposed action is the least environmentally damaging practicable alternative.

Even considering these factors, it is possible that the construction of the project could have some noticeable, but not destabilizing, impacts on terrestrial resources, depending on what resources are affected, as demonstrated by other environmental reviews the NRC has performed (e.g., reviews for new reactors). Given the passive nature of ISFSI operations, impacts on terrestrial resources from such operations (e.g., reduced available habitat, reduced mobility of terrestrial animals, and increased noise, light, and traffic) would be much less than the impacts of construction and would be minimal. Transportation of the spent fuel to the ISFSI would have little or no impacts on terrestrial resources. Therefore, the NRC concludes that, depending on the characteristics of the particular site, the impacts on terrestrial resources could range from SMALL to MODERATE, based primarily on the potential impacts of construction activities.

5.9.2 Long-Term Storage

As described previously in Section 5.1.2, the NRC assumes that a DTS would be constructed as part of an away-from-reactor ISFSI. This facility would be used to facilitate repackaging of spent fuel or replacement of damaged canisters or casks identified during visual inspections or aging management activities. Construction of a DTS is anticipated to last about 2 years (see

Section 5.1.2), and only a small portion of the land committed for an away-from-reactor ISFSI is required to construct and operate a DTS.

The NRC assumes that because only a small portion of the land committed for an away-from-reactor ISFSI is required to construct and operate a DTS, the impacts from construction and operation of a DTS on terrestrial resources would be significantly less than those from construction and operation of an away-from-reactor ISFSI. The DTS could be sited on previously disturbed ground, probably away from sensitive terrestrial features, due to the relatively small land area affected for a DTS security zone (about 2 ac).

Operational impacts would include reduced available habitat and mobility of terrestrial animals and increased noise, light, and traffic. Maintenance activities would include inspections and testing of the spent fuel and cask transfer and handling equipment and process and effluent radiation monitoring, which do not increase erosion, fugitive dust, traffic, noise, light, or release of contaminants or require any change to land use. As the ISFSI and the DTS are replaced during the long-term storage timeframe, it is anticipated that there would be no new or additional activities from those described above. The potential impacts would be less than the impacts the NRC evaluated in Section 5.9.1 because replacement activities would occur within the operational area near existing facilities. For these reasons, the NRC concludes that the impact on terrestrial resources due to transfer, handling, and aging management of spent fuel at an away-from-reactor ISFSI during the long-term storage timeframe would be SMALL.

5.9.3 Indefinite Storage

Impacts on terrestrial resources from continued operation of an away-from-reactor ISFSI if a repository is not available would be similar to those described in Section 5.9.2. The same operations and maintenance activities described in Section 5.9.2 would occur repeatedly because the spent fuel would remain at the facility indefinitely.

Based on the NRC's evaluation of the impacts from operations of an away-from-reactor ISFSI in Section 5.9.2, the NRC concludes that the environmental impacts on terrestrial resources from dry cask storage of spent fuel at an away-from-reactor ISFSI indefinitely would be SMALL.

5.10 Aquatic Ecology

This section describes aquatic ecology impacts caused by the continued storage of spent fuel at an away-from-reactor ISFSI.

5.10.1 Short-Term Storage

Construction and operation of an away-from-reactor ISFSI would require limited water supplies (see Sections 5.7 and 5.8). Liquid effluents, if any, would be limited to stormwater and treated

wastewater. The dry cask storage facility could likely be sited away from sensitive aquatic features to comply with the ESA and other environmental laws. Ground-disturbing activities could increase runoff and surface erosion into aquatic habitats. In most cases, aquatic disturbances would result in relatively short-term impacts and the aquatic environs would recover naturally. In addition, stormwater control measures, which would be required to comply with NPDES permitting, would minimize the flow of disturbed soils or other contaminates into aquatic features. The plant operator could also implement BMPs to minimize erosion and sedimentation.

For the PFSF, given the minimal impacts on aquatic biota and minimal aquatic features near the site, the NRC concluded that construction and operational activities at the PFSF would have had negligible direct and indirect impacts on aquatic biota (NRC 2001). This conclusion resulted from the facility's limited water use and the passive nature of facility operations. For an away-from-reactor ISFSI at a different location, the impacts on aquatic resources could be different from those at the PFSF. However, certain factors would tend to limit the impacts, including the following:

- The land area permanently disturbed is relatively small.
- Water use for the construction and operation of the site is limited.
- Any impacts from discharges to waterbodies must be addressed under the Clean Water Act and an associated NPDES permit must be obtained for such discharges, including stormwater runoff.

Considering all of these factors, the NRC concludes that the impacts on aquatic resources would be SMALL.

5.10.2 Long-Term Storage

Building a DTS and activities related to the transfer and handling of spent fuel and aging management at away-from-reactor ISFSIs could result in ground-disturbing activities that would have similar impacts to those analyzed in Section 5.10.1. For example, ground-disturbing activities could increase runoff and surface erosion into aquatic habitats. The ISFSI and the DTS would be replaced during the long-term storage timeframe. The NRC anticipates that aquatic impacts from these activities would be within the bounds of those described in Section 5.10.1. The potential impacts may be less than the impacts the NRC evaluated in Section 5.10.1 because replacement activities would occur within the facility's operational area near existing facilities over an extended period of time. In most cases, aquatic disturbances, if any, would result in relatively short-term impacts and the aquatic environs would recover naturally. Required mitigation related to NPDES or other permits would also reduce impacts. Therefore, the NRC concludes that impacts on aquatic resources from long-term storage at away-from-reactor ISFSIs would be SMALL.

5.10.3 Indefinite Storage

Impacts on aquatic resources from maintenance and operation of an away-from-reactor ISFSI if no repository becomes available would be similar to those described in Section 5.10.2. The same operations and maintenance activities described in Section 5.10.2 would occur repeatedly because the spent fuel would remain at the facility indefinitely. As described in Section 5.10.2, these activities could result in minimal, short-term impacts on aquatic resources. Therefore, the NRC concludes that impacts on aquatic resources for indefinite storage of spent fuel at an away-from-reactor ISFSI would be SMALL.

5.11 Special Status Species and Habitats

This section describes special status species and habitat impacts caused by the continued storage of spent fuel at an away-from-reactor ISFSI.

5.11.1 Short-Term Storage

Impacts from the construction and operation of dry cask storage facilities on special status species and habitats would be similar to those described above for terrestrial and aquatic resources, which would range from minimal to noticeable; any noticeable impacts would result from the construction of the ISFSI. The NRC assumes that the dry cask storage facility could be sited to avoid adversely affecting special status species and habitat because of the facility's relatively small construction footprint and limited use of water. However, if an away-from-reactor ISFSI was located in area that could affect Federally listed species or designated critical habitat, consultation under Section 7 of the ESA would be required.

Prior to initial licensing of the facility, the NRC would coordinate with the U.S. Fish and Wildlife Service (FWS) or the National Marine Fisheries Service (NMFS) to determine the presence of any Federally listed species or designated critical habitat at or near the site. If Federally listed species or designated critical habitat could be affected by the facility, the NRC would be required to initiate ESA Section 7 consultation. This consultation may be either formal or informal, depending on the specific adverse effect. In the case of an adverse effect for which the NRC would issue a biological assessment that initiates formal consultation, the FWS or NMFS would issue a biological opinion in accordance with the provisions of formal consultation at 50 CFR 402.14. The FWS or NMFS could issue, with a biological opinion, an incidental take statement that exempts a certain incidental take of Federally listed species and reasonable and prudent measures necessary or appropriate to minimize impacts to Federally listed species and designated critical habitats. Following the conclusion of an initial consultation, 50 CFR 402.16 directs Federal agencies to reinitiate consultation where discretionary Federal involvement or control over the action has been retained or is authorized by law and where (1) the amount or extent of taking specified in the incidental take statement is exceeded, (2) new information reveals effects to Federally listed species or designated critical habitats that were not previously

considered, (3) the action is modified in a manner that causes effects not previously considered, or (4) new species are listed or new critical habitat is designated that may be affected by the action.

Thus, the ESA consultation process would identify potential impacts on Federally listed species and potentially require monitoring and mitigation to minimize impacts on Federally listed species. In addition, the official lists of Federally listed species and designated critical habitats are updated by the FWS or NMFS. Species may be added to the list or delisted. If new species are listed under the ESA, the NRC would assess any potential impacts on those species at the away-from-reactor ISFSI at the time of listing. Therefore, if a new species is listed after the ISFSI receives its license, and if the criteria in 50 CFR Part 402 are met for initiation or reinitiation of Section 7 consultation, the NRC would initiate or reinitiate ESA Section 7 consultation with the FWS or NMFS if the newly listed species may be affected by the ISFSI. Additional details and guidance regarding the consultation process are provided in 50 CFR Part 402 and in the *Endangered Species Consultation Handbook* (FWS/NMFS 1998), respectively.

In addition, NRC and licensee coordination with other Federal and State natural resource agencies would further encourage licensees to take appropriate steps to avoid or mitigate impacts on special status species, habitats of conservation concern, and other protected species and habitats, such as those protected under the Fish and Wildlife Coordination Act, Coastal Zone Management Act, Marine Mammal Protection Act, the Migratory Bird Treaty Act, and the Bald and Golden Eagle Protection Act, as applicable. NRC and licensee coordination with other Federal and State natural resource agencies would likely result in avoidance or mitigation measures that would minimize impacts on protected species and habitats. Impacts on essential fish habitat (EFH) from short-term storage are not expected because away-from-reactor ISFSIs are built on land and ground-disturbing impacts would have minimal impacts on aquatic habitats, as described in Section 5.10.1.

The impacts on Federally listed species and designated critical habitat would be determined as part of ESA Section 7 consultation. In complying with the ESA, the NRC would evaluate the impacts of ISFSI construction, operations, and decommissioning in a site-specific review before the ISFSI is initially constructed and afterwards if an activity meets the criteria in 50 CFR Part 402 for initiation or reinitiation of Section 7 consultation. The FWS ESA guidance provides four categories by which the NRC would characterize the effects of ISFSI construction, operation, and decommissioning: (1) no effect, (2) may affect but is not likely to adversely affect, (3) may affect and is likely to adversely affect, or (4) is likely to jeopardize the continued existence of the listed species or destroy or adversely modify the designated critical habitat of Federally listed species populations. In the unlikely situation that construction or operation of an ISFSI could adversely affect EFH, and if the criteria are met in 50 CFR Part 600 for initiation of consultation

under the Magnuson–Stevens Fishery Conservation and Management Act, the NRC would be required to initiate EFH consultation with NMFS.

Given flexibility in site selection and the limited size of an ISFSI, the ISFSI can likely be sited to minimize adverse effects on special status species and habitats. Accordingly, the NRC concludes that the construction and operation of the ISFSI could have minimal to noticeable impacts on State-listed species, marine mammals, migratory birds, and bald and golden eagles.

5.11.2 Long-Term Storage

As described above, the NRC would evaluate the impacts on Federally listed species and designated critical habitat from construction and operation of the ISFSI in a site-specific review as required under the ESA. This evaluation would include the potential impacts from transfer, handling, and aging management activities, including ISFSI and DTS replacement. If transferring, handling, or aging management resulted in a take of a Federally listed species, and if the criteria in 50 CFR Part 402 are met for initiation or reinitiation of ESA Section 7 consultation, the NRC would initiate or reinitiate consultation with the FWS or NMFS.

During long-term storage, the NRC assumes that the licensee would have to build a DTS. The NRC authorization to construct and operate a DTS would constitute a Federal action under NEPA and would be addressed pursuant to 10 CFR Part 51. Prior to authorization, the NRC would coordinate with FWS or NMFS to determine the presence of any Federally listed species or designated critical habitat at or near the site. If Federally listed species or designated critical habitat occur near the site and could be affected by the facility, the NRC would be required to initiate ESA Section 7 consultation, as described in Section 5.11.1. Because the ISFSI and the DTS would be replaced during the long-term storage timeframe, the NRC anticipates that the impacts on special status species and habitats would be within the bounds of those described above. The potential impacts would most likely be less than the impacts the NRC evaluated in Section 5.11.1 because replacement activities would occur within the operational area near existing facilities over an extended period of time.

In addition, NRC and licensee coordination with other Federal and State natural resource agencies would further encourage ISFSI licensees to take appropriate steps to avoid or mitigate impacts to State-listed species, habitats of concern, and other protected species and habitats. NRC and licensee coordination with other Federal and State natural resource agencies would likely result in avoidance or mitigation measures that would minimize impacts on protected species and habitats, such as those protected under the Fish and Wildlife Coordination Act, Coastal Zone Management Act, Marine Mammal Protection Act, the Migratory Bird Treaty Act, and the Bald and Golden Eagle Protection Act, as applicable.

As described above, in complying with the ESA, the NRC would assess the impacts to Federally listed species and designated critical habitat from an away-from-reactor ISFSI and DTS in a

site-specific review before the facility is initially constructed and afterwards if an activity meets the criteria in 50 CFR Part 402 for initiation or reinitiation of Section 7 consultation. The NRC would characterize the effects of construction and operations in terms of its ESA findings of (1) no effect, (2) may affect but is not likely to adversely affect, (3) may affect and is likely to adversely affect, or (4) likely to jeopardize the listed species, or adversely modify the designated critical habitat of Federally listed species populations. In the unlikely situation that activities during the long-term storage period could adversely affect EFH, and if the criteria are met in 50 CFR Part 600 for initiation of consultation under the Magnuson–Stevens Fishery Conservation and Management Act, the NRC would be required to initiate EFH consultation with NMFS.

Given flexibility in site selection and the limited size of an ISFSI and DTS, these facilities can likely be sited to minimize adverse effects on special status species and habitats. Accordingly, the NRC concludes that operating and replacing components of the ISFSI and DTS could have minimal impacts on State-listed species, marine mammals, migratory birds, and bald and golden eagles.

5.11.3 Indefinite Storage

Impacts on special status species and habitats from continued operation of an away-from-reactor ISFSIs if a repository never becomes available would be similar to those described in Section 5.11.2. The same operations and maintenance activities described in Section 5.11.2 would occur repeatedly because the spent fuel would remain at the facility indefinitely.

As described above, in complying with the ESA, the NRC would evaluate the impacts from an away-from-reactor ISFSI and DTS in a site-specific review before the facility is initially constructed and afterwards if an activity meets the criteria in 50 CFR Part 402 for initiation or reinitiation of Section 7 consultation. The NRC would report the effects of construction and operations in terms of its ESA findings of (1) no effect, (2) may affect but is not likely to adversely affect, (3) may affect and is likely to adversely affect, or (4) likely to jeopardize the listed species, or adversely modify the designated critical habitat of Federally listed species populations. In the unlikely situation that activities during indefinite storage period could adversely affect EFH, and if the criteria are met in 50 CFR Part 600 for initiation of consultation under the Magnuson–Stevens Fishery Conservation and Management Act, the NRC would be required to initiate EFH consultation with NMFS.

Given flexibility in site selection and the limited size of an ISFSI and DTS, the ISFSI and DTS can likely be sited to minimize adverse effects on special status species and habitats. Accordingly, the NRC concludes that operating and replacing components of the ISFSI and DTS could have minimal impacts on State-listed species, marine mammals, migratory birds, and bald and golden eagles.

5.12 Historic and Cultural Resources

This section describes historic and cultural resource impacts caused by the continued storage of spent fuel at an away-from-reactor ISFSI.

The NRC is considering impacts on historic and cultural resources in this GEIS through implementation of its NEPA requirements in 10 CFR Part 51. This rulemaking is not a licensing action; it does not authorize the construction or operation of an away-from-reactor ISFSI, and it does not authorize storage of spent fuel. Because this GEIS does not identify specific sites for NRC licensing actions, an NHPA Section 106 review has not been performed. However, the NRC complies with NHPA Section 106 and the implementing provisions in 36 CFR Part 800 in site-specific licensing actions. As discussed in Section 3.11, identification of historic properties, adverse effects, and potential resolution of adverse effects would be conducted through consultation and application of the National Register of Historic Places criteria in 36 CFR 60.4. This information would also be evaluated to determine the significance of potential impacts on historic and cultural resources in the NRC's environmental review documents.

For site-specific licensing actions (new reactor licensing, reactor license renewal, and site-specific at-reactor and away-from-reactor ISFSIs), the NRC complies with Section 106 requirements to consider the effects of its undertaking on historic properties. If any historic properties are present, their significance would be determined through application of the National Register of Historic Places criteria. If adverse effects to historic properties are identified, appropriate mitigation can be developed through consultation with the State Historic Preservation Officer, or appropriate Tribal Historic Preservation Officer, tribal representatives, and other interested parties. A site-specific license could be issued at the conclusion of the NRC's safety review and environmental review and compliance with NHPA Section 106 requirements.

As discussed in more detail below, the NRC recognizes that there is uncertainty associated with the degree of prior disturbance and the resources, if any, are present in areas where future ground-disturbing activities could occur. The NRC cannot eliminate the possibility that historic and cultural resources would be affected by construction activities because the initial ISFSI could be located within a less-disturbed area with historic and cultural resources in close proximity. Further, resources may be present after initial construction of the away-from-reactor ISFSI that would not have been considered significant at the time the initial or replacement facilities were constructed, but could become significant in the future.

5.12.1 Short-Term Storage

NRC authorization to construct and operate an away-from-reactor ISFSI would constitute a Federal action under NEPA and would be an undertaking under the NHPA. In accordance with

36 CFR Part 800, the NRC would conduct an NHPA Section 106 review to determine whether historic properties are present in the area of potential effect, and if so, whether construction and operation of the ISFSI would result in any adverse effects on such properties. Prior to submitting an application to construct and operate the ISFSI, the ISFSI applicant would conduct a survey of any areas of proposed development to identify and record historic and cultural resources. Impacts on historic and cultural resources would vary depending on the location of the ISFSI and what resources are present. Resolution of adverse effects to historic properties, if any, should be concluded prior to the closure of the Section 106 process. After construction is completed, disturbed areas not occupied by ISFSI structures and supporting infrastructure (e.g., access roads, parking areas, and laydown areas) would be reclaimed and revegetated.

The environmental impacts on historic and cultural resources from the construction and operation of an away-from-reactor storage facility are informed by the evaluation as described in the PFSF EIS (NRC 2001). The proposed PFSF would have been located on the Reservation of the Skull Valley Band of Goshute Indians, which encompasses 7,200 ha (18,000 ac) in Tooele County, Utah. Storage pads for the canisters and some support facilities would have been located on a 99-ac (40-ha) restricted access area within the PFSF site (NRC 2001). Additional land would have been disturbed for the access road and the new rail line. The NRC assumes that the amount of land disturbance for an away-from-reactor ISFSI would be similar to the land disturbance for the PFSF, as discussed in the introduction to this chapter and Section 5.1.

Extensive work was performed at the PFSF to identify historic and cultural resources on or near the facilities and to evaluate the potential impacts of the project on those resources (NRC 2001). As a result, the NRC concluded that the construction of the rail line would have adversely affected portions of eight historic properties evaluated as eligible for inclusion in the National Register of Historic Places. The NRC included in the PFS license a condition that required the implementation of seven specific requirements for the treatment of historic properties. Operation of the proposed PFSF was not expected to impact historic and cultural resources because no additional ground disturbance would occur (NRC 2001).

For an away-from-reactor ISFSI, the impacts on historic and cultural resources would be different from those at the PFSF, given the difference in sites. However, several factors could avoid, minimize, or mitigate impacts. These include the following:

- Any impacts on historic and cultural resources would be addressed during a site-specific NEPA review. Any adverse effects to historic properties must be addressed under the NHPA in consultation with any affected State or Tribal Historic Preservation Officers, and other interested parties.
- The land area disturbed is relatively small and any one of a number of alternative sites can be selected.

- In most, but not all instances, placement of facilities on a proposed site could be adjusted to minimize or avoid impacts on historic and cultural resources in the area, but the NRC recognizes that this is not always possible. Because an away-from-reactor ISFSI does not depend on a significant water supply and has limited electrical power needs, an applicant may have more flexibility in how it chooses to place facilities on a site and therefore have a greater chance of avoiding historic and cultural resources in the area.
- Potential adverse effects to historic properties and impacts to other historic and cultural resources could be minimized through development of agreements, license conditions, and implementation of the licensees' historic and cultural resource management plans and procedures to protect known historic and cultural resources and address inadvertent discoveries during construction.

However, it may not be possible to avoid adverse effects on historic properties under NHPA or impacts on historic and cultural resources under NEPA. The magnitude of adverse effects on historic properties and impacts on historic and cultural resources largely depends on where facilities are sited, what resources are present, the extent of proposed land disturbance, whether the area has been previously surveyed to identify historic and cultural resources, and if the licensee has management plans and procedures that are protective of historic and cultural resources. Even a small amount of ground disturbance (e.g., clearing and grading) could affect a small but significant resource. In most instances, placement of storage facilities on the site can be adjusted to minimize or avoid impacts on any historic and cultural resources in the area. However, the NRC recognizes that this is not always possible. The NRC's site-specific environmental review and compliance with the NHPA process could identify historic properties, identify adverse effects, and potentially resolve adverse effects on historic properties and impacts on other historic and cultural resources. Under the NHPA, mitigation does not eliminate a finding of adverse effect on historic properties. Therefore, the NRC concludes that the potential impacts on historic and cultural resources could range from SMALL to LARGE, depending on site-specific factors.

Impacts from continued operations and routine maintenance during short-term timeframe would be small because no ground-disturbing activities are expected. Therefore, impacts associated with continued operations and maintenance of the ISFSI on historic and cultural resources during the short-term timeframe would be SMALL.

5.12.2 Long-Term Storage

The NRC assumes that systems, structures, and components of an away-from-reactor ISFSI would be replaced during the long-term storage timeframe. In addition to routine maintenance, the NRC also assumes that a DTS is constructed, operated, and replaced as part of an away-from-reactor ISFSI during the long-term storage timeframe. As discussed in Section 5.1.2 of this GEIS, a DTS would be used to retrieve and repackage spent fuel for aging management

activities or to replace damaged canisters or casks identified during visual inspections. Construction and operation of a DTS at an away-from-reactor ISFSI is described in Section 2.1.4 of this GEIS.

Impacts from continued operations and routine maintenance during long-term storage would be similar to those described for the short-term storage timeframe. The impacts would be small because there would be no ground-disturbing activities as a result of the continued operations and routine maintenance at the ISFSI.

NRC authorization to construct and operate a DTS and replace the ISFSI and DTS would constitute Federal actions under NEPA and would be undertakings under the NHPA and would require a site-specific environmental review and compliance with NHPA requirements before making a decision on the licensing action. In accordance with 36 CFR Part 800, a Section 106 review would be conducted for each undertaking to determine whether historic properties are present in the area of potential effect, and if so, whether these actions would result in any adverse effects upon these properties. Impacts on historic and cultural resources can vary depending on the location of the original DTS and the replacement ISFSI and DTS and what resources are present. For site-specific licensing actions (new reactor licensing, reactor license renewal, site-specific at-reactor and away-from-reactor ISFSIs, and DTS), applicants are required to provide historic and cultural resource information in their environmental reports. To prepare these assessments, applicants conduct cultural resource surveys. This information assists NRC in its review of the potential impacts on historic and cultural resources. Section 106 of the NHPA requires the NRC to conduct a site-specific assessment to determine whether historic properties are present in the area of potential effect, and if so, whether construction and operation of a DTS would result in any adverse effect upon these properties. Resolution of adverse effects, if any, should be concluded prior to the closure of the Section 106 process.

The NRC assumes that the replacement ISFSI and initial and replacement DTS will be constructed on land near the existing facilities. Ground-disturbing activities occurred during initial ISFSI construction, and much of the land within and immediately surrounding the ISFSI would be disturbed. If the replacement ISFSI and initial and replacement DTS are sited within previously disturbed areas, then impacts would likely be small because initial construction of the ISFSI could have reduced the potential for historic and cultural resources to be present. However, if these facilities were sited in less-developed or disturbed portions of the ISFSI site, then there could be impacts to historic and cultural resources.

Given the land area available around the ISFSI restricted area, the licensee should be able to locate the replacement facilities away from historic and cultural resources. However, the NRC recognizes that it may not be possible for a licensee to avoid adverse effects to historic properties under NHPA or impacts on historic and cultural resources under NEPA. The NRC believes that it is reasonable to assume that the replacement ISFSI and the initial and replacement DTS would be constructed near the existing ISFSI because the licensee would

already have characterized and selected the initial ISFSI site to meet NRC siting, safety, and security requirements. The NRC believes that it is reasonable to assume that licensees would generally avoid siting and operating an ISFSI away from the existing licensed area or outside previously characterized areas. The magnitude of adverse effects on historic properties and impacts to historic and cultural resources during the long-term timeframe largely depends on where the facilities are sited, what resources are present, the extent of proposed land disturbance, whether the area has been previously surveyed to identify historic and cultural resources, and whether the licensee has management plans and procedures that are protective of historic and cultural resources. Even a small amount of ground disturbance (e.g., clearing and grading) could affect a small but significant resource. In most, but not all, instances, placement of storage facilities on the site can be adjusted to minimize or avoid impacts on any historic and cultural resources in the area. Before these ground-disturbing activities occur, the site-specific environmental review and compliance with the NHPA process would identify historic properties and historic and cultural resources that could be impacted. Under the NHPA, mitigation does not eliminate a finding of adverse effect on historic properties; but impacts would be assessed at the time of the future proposed licensing action.

Based on the considerations above, the potential impacts on historic and cultural resources during the long-term storage timeframe would range from SMALL to LARGE. This range takes into consideration routine maintenance and monitoring (i.e., no ground-disturbing activities), the absence or avoidance of historic and cultural resources, and potential ground-disturbing activities that could affect historic and cultural resources. The analysis also considers uncertainties inherent in analyzing this resource area over long timeframes. These uncertainties include any future discovery of previously unknown historic and cultural resources; resources that gain significance within the vicinity and the viewshed (e.g., nomination of a historic district) due to improvements in knowledge, technology, and excavation techniques and changes associated with predicting resources that future generations will consider significant. Potential adverse effects on historic properties or impacts on historic and cultural resources could be minimized through development of agreements, license conditions, and implementation of the licensees' historic and cultural resource management plans and procedures to protect known historic and cultural resources and address inadvertent discoveries during construction of the replacement ISFSI and initial and replacement DTS. If construction of a DTS and replacement of the ISFSI and DTS occurs in an area with no historic or cultural resource present or construction occurs in previously a disturbed area that allows avoidance of historic and cultural resources then impacts would be SMALL. By contrast, a MODERATE or LARGE impact could result if historic and cultural resources are present at a site and, because they cannot be avoided, are impacted by ground-disturbing activities during the long-term timeframe. Accordingly, the NRC has concluded that the impacts on historic and cultural resources for the long-term timeframe would be SMALL to LARGE.

5.12.3 Indefinite Storage

The environmental impacts of indefinite spent fuel storage would be similar to those described in Section 5.12.2. The same operations and maintenance activities described in Section 5.12.2 would occur repeatedly because the spent fuel would remain at the facility indefinitely. During this timeframe, maintenance and monitoring would continue and the at-reactor ISFSI and DTS would be replaced every 100 years. The site-specific environmental review and compliance with the NHPA process would identify historic properties, adverse effects, and potentially resolve adverse effects on historic properties and impacts on other historic and cultural resources. As discussed in Section 5.12.2, the NRC assumes that the replacement of the ISFSI and DTS would be constructed on land near the existing facilities. As stated in Section 1.8, the NRC assumes that the land where the original facilities were constructed will be available for replacement facility construction; however, the NRC cannot eliminate the possibility that historic and cultural resources would be affected by construction activities during the indefinite timeframe because the NRC recognizes that there is uncertainty associated with the degree of prior disturbances and what resources, if any, are present in areas where future ground-disturbing activities (e.g., initial and replacement DTS and replacement ISFSI) could occur. Further, significant resources may be present that were not considered significant at the time the initial or replacement facilities were constructed. Impacts regarding the replacement of the ISFSI and DTS would be similar to those described for the long-term storage timeframe.

Based upon the considerations above, the potential impacts to historic and cultural resources during the indefinite storage timeframe would range from SMALL to LARGE. This range takes into consideration routine maintenance and monitoring (i.e., no ground-disturbing activities), the absence or avoidance of historic and cultural resources, and potential ground-disturbing activities that could impact historic and cultural resources. The analysis also considers uncertainties inherent in analyzing this resource area over long timeframes. These uncertainties include any future discovery of previously unknown historic and cultural resources; resources that gain significance within the vicinity and the viewshed (e.g., nomination of a historic district) due to improvements in knowledge, technology, and excavation techniques and changes associated with predicting resources that future generations will consider significant. Potential adverse effects on historic properties or impacts on historic and cultural resources could be minimized through development of agreements, license conditions, and implementation of the licensees' historic and cultural resource management plans and procedures to protect known historic and cultural resources and address inadvertent discoveries during construction of the replacement ISFSI and replacement DTS. If construction of a DTS and replacement of the ISFSI and DTS occurs in an area with no historic or cultural resource present or construction occurs in previously a disturbed area that allows avoidance of historic and cultural resources then impacts would be SMALL. By contrast, a MODERATE or LARGE impact could result if historic and cultural resources are present at a site and, because they cannot be avoided, are impacted by ground-disturbing activities during the indefinite timeframe.

Accordingly, the NRC has concluded that the impacts on historic and cultural resources for the indefinite timeframe would be SMALL to LARGE.

5.13 Noise

This section describes noise impacts caused by the continued storage of spent fuel at an away-from-reactor ISFSI.

5.13.1 Short-Term Storage

The assessment of the environmental impacts of noise from the construction and operation of an away-from-reactor ISFSI is informed by those described in the PFSF EIS (NRC 2001). Background noise levels within the vicinity of the PFSF (Skull Valley) are low, as would be expected for any remote location. The EPA (1974) has provided guideline sound levels below which the general public would be protected from activity interference and annoyance; 55 dBA applies to outdoor locations “in which quiet is a basis for use” and 45 dBA applies to indoor residential areas (NRC 2001).

Construction of the ISFSI facility occurs during a small portion of the short-term timeframe. The schedule for the proposed PFSF called for the first stage of construction, which included the major buildings and one-fourth of the total number of proposed storage pads, to last 18 months (NRC 2001). Noise impacts would result from construction equipment used to grade and level the site, excavate the facility foundation, handle building materials, build the ISFSI facilities (e.g., buildings, storage pads, access road, new rail siding, and new rail spur), and from additional construction traffic. Construction equipment associated with these activities can generate noise levels up to 95 dBA (NRC 2001). This noise level applies at a reference distance of 15 m (50 ft) from the source. Noise levels decrease by about 6 dBA for each doubling of distance from the source. At distances greater than about 1.9 km (1.2 mi), expected maximum noise levels would be less than the 55 dBA recommended by the EPA for protection against outdoor activity interference and annoyance (NRC 2001). For the PFSF, construction-related noise levels were expected to be less than 48 dBA in the ambient air at the nearest residences (at a distance of roughly 3 km [2 mi]). Therefore, noise from construction activity was not expected to be annoying for residents located in the nearest houses (NRC 2001). However, for an away-from-reactor ISFSI at a different location, the nearest resident could be closer and noise levels during construction could exceed the EPA recommendation. Whether associated noise impacts could or would be mitigated could only be determined during a site-specific review.

Construction would also result in increased vehicle traffic (e.g., commuting workforce, construction vehicles, and material transport) and an associated increase in noise. For the PFSF this would have increased noise levels by 5 dBA (NRC 2001). The impacts of the

increase in noise around the ISFSI will depend considerably on the nature of the area through which the traffic is passing. Because the NRC expects that the ISFSI will be built in a remote location with little pre-existing traffic, the noise from the additional traffic is likely to be noticeable and could exceed the EPA recommendation. However, the duration of the most intense portion of the construction period would be limited (roughly 18 months for the PFSF).

Operation of the ISFSI would involve transporting, receiving, handling, and storing spent fuel, as well as routine maintenance and monitoring of the ISFSI. Cask transportation, receiving, and handling would be the primary noise sources during operations; the loudest onsite noise source would most likely be the onsite locomotive diesel switch engine. The train whistle from this locomotive could be audible at nearby residences. Momentary noise from routine operation could exceed 100 dBA. However, this locomotive would only operate a few hours per week (NRC 2001). Because the locomotive would be expected to operate only a few hours per week, indoor and outdoor noise impacts are expected to be minimal.

Noise impacts could also be associated with the transportation of spent fuel to the site. In the PFSF EIS (NRC 2001), the NRC estimated that an average of 150 loaded transportation packages would be received at the facility each year, carried by 1 or 2 trains per week, and a similar frequency is assumed for the ISFSI. While the train's whistle would be loud, trains would be passing only infrequently. Therefore, the NRC concludes that the noise impacts resulting from transportation of spent fuel to the ISFSI would be minor.

In conclusion, the NRC determined that the construction and operation noise impacts for the away-from-reactor ISFSI could exceed the EPA-recommended levels during some portions of construction and occasionally during operations. However, because of the limited duration of the construction period and the intermittent nature of the noise, the NRC concludes that the overall impacts associated with noise for the construction and short-term operation of the away-from-reactor ISFSI would be SMALL.

5.13.2 Long-Term Storage

The NRC assumes that a DTS is constructed as the duration and quantity of spent fuel in dry cask storage at an onsite storage facility increases. This facility would be used to retrieve and repackage spent fuel for aging management activities or to replace damaged canisters or casks identified during visual inspections. Section 2.1.4 provides a detailed description of the DTS.

Construction of a DTS would take approximately 1 to 2 years to complete. Noise levels generated during construction would be similar to those associated with initial construction of the ISFSI. Noise levels during construction could exceed the EPA recommendation at the nearest residence. Whether associated noise impacts could or would be mitigated could only be determined during a site-specific review. There would also be some additional traffic associated with the construction of the DTS but less than the traffic that would have occurred during initial construction.

Noise generated during operation of the ISFSI (e.g., cask handling, movements to and from pads, and routine maintenance and monitoring of the ISFSI) would be the same as during operations for the short-term timeframe, which were minimal.

Aging management would require the replacement of the ISFSI (e.g., casks, storage pads, and canister transfer building) and the DTS during the long-term storage timeframe. Storage facility and DTS replacement uses construction equipment that can generate noise levels similar to the original construction of the ISFSI. These noise levels could exceed the EPA recommendation during replacement activities. Whether associated noise impacts could or would be mitigated could only be determined during a site-specific review.

In conclusion, construction of the DTS, although temporary and representing a small portion of the overall timeframe for the spent fuel storage, does generate noise levels that could exceed EPA-recommended noise levels, as would activities to replace storage pads and other structures. However, these activities are temporary and noticeable noise levels would be limited to the nearest receptors. Generally for continued spent fuel storage, the operation noise levels, noise duration, and distance between the noise sources and receptors do not produce impacts noticeable to the surrounding community. Therefore, the NRC concludes that the overall noise impacts during the long-term storage timeframe at an away-from-reactor ISFSI would be SMALL.

5.13.3 Indefinite Storage

The environmental impacts of indefinite spent fuel storage would be similar to those described in Section 5.13.2. The same operations and maintenance activities described in Section 5.13.2 would occur repeatedly because the spent fuel would remain at the facility indefinitely. Based on this information, the NRC concludes that the overall noise impacts during indefinite storage at an away-from-reactor ISFSI would be SMALL.

5.14 Aesthetics

This section describes aesthetic resource impacts caused by the continued storage of spent fuel at an away-from-reactor ISFSI.

5.14.1 Short-Term Storage

Development of an away-from-reactor ISFSI would use a larger land area than any at-reactor ISFSI. The ISFSI would likely be sited and constructed in an area remote from population centers and areas sensitive to aesthetic concerns. On the other hand, the ISFSI could be sited and constructed in an area with no existing industrial facilities or similar land disturbance. Therefore, a site-specific analysis of the aesthetic impacts will be required for any proposed facility. The ISFSI could affect local scenic and visual quality to the extent its facility structures

and operations (e.g., buildings, dry storage pads and canisters, the rail line, and trains) are visible across any scenic waterbodies or from higher topographic elevations. Facility lighting could also affect the scenic quality of the area. If constructed in an area with no existing industrial development, there could also be viewshed impacts to the cultural landscape if historic properties are present within the area. Potential mitigation measures include use of shielded lights to minimize light diffusion at night, planting native vegetation or constructing earthen berms to screen the facility, and using paint colors that blend facility structures with the surrounding landscape, as discussed in the PFSF EIS (NRC 2001).

Further, the NRC considered the aesthetic impacts of spent fuel storage at a consolidated site as part of the PFSF EIS. This evaluation represents the result for an ISFSI built in an area with no previous industrial development. For the PFSF, the NRC found that the visual character of the area surrounding the site would have been negatively affected by development and operation of an industrial facility in an otherwise largely undeveloped rural landscape. The NRC determined that the scenic appeal of the site would have been noticeably changed when viewed from various locations. Because of these anticipated changes to the affected viewshed, the NRC found the aesthetic impacts from the construction and operation of the PFSF to be SMALL to MODERATE (NRC 2001).

For an away-from-reactor ISFSI at a different location, the impacts on aesthetic resources would be similar to those for the PFSF if it is built in a location with no previous industrial development. But the impacts could be SMALL if the ISFSI is built in a previously disturbed location (i.e., a brownfield site). Overall, the NRC concludes that the impacts on aesthetic resources would be SMALL to MODERATE.

5.14.2 Long-Term Storage

Aesthetic impacts from transferring and handling spent fuel and aging management activities at an away-from-reactor ISFSI are anticipated to be similar to the impacts described for the construction and short-term operation of the ISFSI described in Section 5.14.1. More specifically, periodic construction and demolition of facilities (including a DTS), although temporary, could cause an increase in aesthetic impacts compared to normal operation of the facility. However, because the replacement of the facilities would be placed near existing facilities and the activities and structures involved in the replacement are not expected to provide a significant change to what would exist prior to replacement, there would be no noticeable change to the impacts on aesthetic resources.

Because the periodic construction, demolition, and operation activities required for aging management would not significantly alter the pre-existing impacts of an away-from-reactor ISFSI, the NRC concludes that the environmental impacts on aesthetic resources due to long-term storage would be SMALL to MODERATE.

5.14.3 Indefinite Storage

If a repository is not available and away-from-reactor ISFSIs are developed, the activities that would be conducted at an away-from-reactor ISFSI would be the same as those described in Section 5.14.2. The same operations and maintenance activities described in Section 5.14.2 would occur repeatedly because the spent fuel would remain at the facility indefinitely. Based on this information, the NRC concludes that the aesthetic impacts during long-term storage at an away-from-reactor ISFSI would be SMALL to MODERATE.

5.15 Waste Management

This section describes impacts from low-level radioactive waste (LLW), mixed waste, and nonradioactive waste management and disposal resulting from the continued storage of spent fuel at an away-from-reactor ISFSI. See Section 3.14 for a description of the different types of waste and typical disposal methods for the wastes. See Section 4.15 for a description of the types and impacts of waste generated from the operation, maintenance, and replacement of an at-reactor ISFSI; they are the same types of waste produced by the operation, maintenance, and replacement of an away-from-reactor ISFSI. However, the away-from-reactor ISFSI is a much larger facility than an at-reactor ISFSI and therefore would generate a higher volume of waste.

5.15.1 Short-Term Storage

Assessment of the environmental impacts from the handling and disposal of LLW, mixed waste, and nonradioactive waste from an away-from-reactor ISFSI is informed by those described in the PFSF EIS (NRC 2001). The PFSF was designed with a capacity of 40,000 MTU and the NRC has assumed a facility of similar size and characteristics for the away-from-reactor ISFSI. Because a similar facility is assumed, the quantities of the various wastes generated at the ISFSI would also be similar to those identified for the PFSF. For purposes of estimating waste volumes, the canister transfer building would only handle canistered spent fuel. Therefore, the NRC assumes the amount of LLW produced during operation of a canister transfer building is no more than is produced at a DTS (i.e., 0.06m^3 [2 ft^3] per canister), which handles bare spent fuel.

The construction of the PFSF would have included construction of major buildings (e.g., administration and laboratory) and 500 concrete storage pads. Construction activities would have generated excavation and construction debris, vegetation debris, and backfill (NRC 2001). For an away-from-reactor ISFSI, the construction debris would typically be disposed of at a local landfill. The excavation and backfill material could likely be reused for other purposes (e.g., building an earthen berm or to level low-lying areas). For the PFSF, the amount of soil excavated was estimated to be 153,500 m^3 (200,800 yd^3). All of this material was expected to

remain onsite for other uses. This is consistent with NRC experience with other applications (e.g., new reactors), for which excavation materials are used or disposed of on the site.

Operation of an away-from-reactor ISFSI, like the PFSF, would involve limited waste-generating activities. The types of wastes generated would be similar to those for an onsite ISFSI, as described in Section 4.15.1, but on a larger scale. Small quantities of LLW would be generated during routine operation, including maintenance and environmental monitoring. This waste would be managed according to 10 CFR Part 20. Because (1) LLW would continue to be managed according to Federal regulations and (2) the disposal capacity for LLW is expected to be available when needed (see Section 1.8.3), the NRC determines the impacts from LLW management and disposal would be minor during short-term storage.

Operation and maintenance of the ISFSI would be expected to generate minimal to no mixed waste. Like other industrial facilities, small quantities of nonradioactive waste would be generated from routine operations and maintenance, including municipal waste and hazardous wastes, such as paint waste, pesticides, and cleaning supplies (NRC 2001). Sanitary wastes would be handled in accordance with regulatory requirements and disposed of at an appropriately permitted disposal facility. The wastes would be managed and disposed of according to regulatory requirements.

The NRC considered the impacts of solid and sanitary wastes due to spent fuel storage at a consolidated site as part of the PFSF EIS. This evaluation found that impacts from managing solid and sanitary wastes during construction and operation of the PFSF would have been SMALL (NRC 2001). Because of the small quantities of waste involved, the NRC concludes that the impacts of managing and disposing of LLW, mixed waste, and nonradioactive waste generated at an away-from-reactor ISFSI would be SMALL.

5.15.2 Long-Term Storage

Routine maintenance would continue to occur in the same manner as described in Section 5.15.1, generating minimal amounts of waste. Waste management and disposal activities related to the construction and operation of a DTS, and the replacement of canisters, storage casks, pads, the canister transfer building, DTS facilities, and other ISFSI structures, are discussed below. The repackaging of spent fuel, construction and operation of a DTS, and ISFSI and DTS replacement are not expected to generate mixed waste. However, if mixed waste is generated, it would be a small fraction of that generated by an operating nuclear power plant and it would be managed according to regulatory requirements. As well, any hazardous wastes generated during this timeframe would be a fraction of that generated at an operating power plant and would be managed according to regulatory requirements.

As described in Sections 4.15.2.1 and 4.15.2.3, the construction of a DTS would not be expected to generate LLW but would generate nonradioactive wastes similar to, but on a much

smaller scale than, the original construction of the ISFSI. The NRC expects that the material that is excavated for the DTS would be disposed of onsite.

For this analysis, because the activities associated with the replacement of the casks and ISFSI facilities are similar to decommissioning activities, the LLW impacts from the replacement of canisters, casks, and concrete pads are based on the decommissioning impacts considered in the PFSF EIS and other sources. As stated in Section 4.15.2.1, individual used canisters would be managed and disposed of as LLW and would have a compacted nominal volume of 1.3 m^3 (1.7 yd^3) (Transnuclear Inc. 2004). An estimated additional 0.06 m^3 (2 ft^3) would be generated during unloading and loading of each canister. Therefore, repackaging and replacing 4,000 canisters at an away-from-reactor ISFSI would generate approximately 5,400 m^3 (7,100 yd^3) of LLW. Once a canister has been removed from a cask, the licensee would survey the cask for residual radioactivity. If levels are below NRC limits, the casks can be disposed of as nonradioactive solid waste. If levels are above NRC limits, the cask material would be disposed of as LLW. Donnell (1998) estimated that the decommissioning of one cask at the PFSF would generate 0.34 m^3 (0.45 yd^3) of compacted LLW. Using this volume, the dismantling of 4,000 storage casks as part of ISFSI replacement would generate 1,360 m^3 (1,780 yd^3) of compacted LLW over an extended period of time. In addition, in its license application, PFS assumed at least 10 percent of the total storage pad surface area would need to be decontaminated. The decontamination of the 500 concrete storage pads at the PFSF would have generated an additional 8.5 m^3 (11 yd^3) of LLW (NRC 2001). If the storage pads are removed in their entirety, approximately 85,500 m^3 (112,000 yd^3) of material would need to be disposed of, either as LLW or nonradioactive waste (NRC 2001). As stated in Section 4.15.2.1, replacing the DTS would generate about 4 to 8 m^3 (5 to 10 yd^3) of LLW (DOE 1996). For purposes of estimating the volume of LLW generated by decontaminating the canister transfer building, which is not designed to handle bare spent fuel and would remain largely uncontaminated, the NRC assumes the amount of LLW is no more than is produced at a DTS (4 to 8 m^3 [5 to 10 yd^3]), which would handle bare spent fuel and could be contaminated.

Using the LLW volumes described above, the total volume of LLW generated during the long-term timeframe from replacement of canisters and decontamination of casks, ISFSI pads, DTS, and canister transfer building is about 6,800 m^3 (8,900 yd^3), which is comparable to the LLW volumes estimated for decommissioning a pressurized-water reactor (NRC 1996).

The NRC also estimated the volume of non-radioactive waste from the activities described above. In addition to the volume of LLW described above, the replacement of 4,000 casks would generate 162,000 m^3 (212,000 yd^3) of nonradioactive waste. The removal of those portions of the ISFSI pad which are decontaminated would generate about 85,500 m^3 (112,000 yd^3) (NRC 2001). The volume of non-radioactive waste from removal of the decontaminated DTS is estimated from the DTS TSAR to be 863 m^3 (1,130 yd^3) (DOE 1996).

Given that the canister transfer building is about 70 times larger than the DTS, the NRC estimates the volume of solid waste generated from removal of the canister transfer building would be about 60,000 m^3 (78,000 yd^3).

In summary, the total nonradioactive waste volume for replacement of storage casks, ISFSI pads, DTS, and canister transfer building is about 308,000 m^3 (403,000 yd^3), which is equivalent to about 740,000 MT (820,000 tons) of concrete. This amount of nonradioactive waste is a very small fraction of the 226 million MT (250.4 million tons) of municipal solid waste disposed of in 2011 (EPA 2013c), which would result in small impacts on total municipal solid waste capacity.

Although the exact amount of LLW and nonradioactive waste depends on the level of contamination, the quantity of waste generated from the replacement of the canisters, storage casks, concrete storage pads, DTS, and canister transfer building is still expected to be a comparable to the LLW generated during reactor decommissioning, which was previously determined to have a SMALL impact in the *Generic Environmental Impact Statement for License Renewal of Nuclear Plants* (NRC 2013a). Because (1) LLW would continue to be managed according to Federal regulations and (2) the disposal capacity for LLW is expected to be available when needed (see Section 1.8.3), the NRC determines the impacts from LLW management and disposal would be minor during the long-term timeframe. In addition, as described above, the amount of radioactive waste results in small impacts on municipal solid waste capacity. Therefore, the NRC determines that the potential environmental impacts from LLW, mixed waste, and nonradioactive waste for long-term storage at an away-from-reactor ISFSI would be SMALL for each waste stream.

5.15.3 Indefinite Storage

This section describes the potential environmental impacts from the management and disposal of LLW, mixed waste, and nonradioactive waste if a repository is not available to accept spent fuel. For this analysis, the NRC assumes that spent fuel would continue to be stored at an away-from-reactor ISFSI indefinitely. The waste-generating activities during this timeframe include the same activities discussed in Section 5.15.2 but with the activities occurring repeatedly. Those impacts were determined to be SMALL based on previous analyses that assumed a repository would be available.

The activities associated with the management and disposal of LLW and mixed waste from indefinite away-from-reactor storage of spent fuel would be similar to those described for the long-term timeframe. As stated in Section 1.8.3, it is expected that sufficient LLW disposal capacity will be made available when needed. Similar to the long-term timeframe, the NRC concludes the management and disposal of LLW and mixed waste could result in SMALL environmental impacts during indefinite storage of spent fuel. However, in this timeframe, because nonradioactive waste would continue to be generated indefinitely, even with continued implementation of and adherence to regulatory requirements, there could be noticeable impacts

on the local and regional landfill capacity for nonradioactive nonhazardous wastes. Therefore, the NRC determines that the environmental impacts from the indefinite management and disposal of nonradioactive waste would be SMALL to MODERATE.

5.16 Transportation

This section describes transportation impacts caused by the continued storage of spent fuel at an away-from-reactor ISFSI. Noise impacts from transportation activities are evaluated in Section 5.13 and air emissions are evaluated in Section 5.4. The transportation activities to move spent fuel to an away-from-reactor ISFSI are included in this section. In considering impacts related to the transportation of spent fuel from reactors to the away-from-reactor ISFSI, the NRC considers both the information in Table S–4[6] (10 CFR 51.52) and the analysis of spent fuel transportation provided in the PFSF EIS (NRC 2001). Activities and impacts associated with moving spent fuel from the away-from-reactor ISFSI to a repository are addressed as cumulative impacts in Chapter 6.

5.16.1 Short-Term Storage

This analysis considers the impacts of transportation activities associated with construction and short-term operation of an away-from-reactor ISFSI on the affected environment beyond the site boundary. The environmental impacts evaluated include impacts on regional traffic from worker commuting, supply shipments, shipment of spent fuel to the ISFSI, and nonradiological and radiological waste shipments. Impacts on traffic from workers commuting to and from the away-from-reactor storage site depend on the size of the workforce, the capacity of the local road network, traffic patterns, and the availability of alternate commuting routes to and from the facility.

Construction transportation activities involve workers commuting to and from the site and shipping construction equipment, supplies, and waste materials. In the prior analysis of impacts from constructing the PFSF, the NRC concluded the initial construction phase (e.g., major buildings, approximately 25 percent of the proposed storage pads, the access road, a new rail siding, and new rail line) would have the largest transportation impacts during construction based on a total workforce of 255, split almost evenly between work on the site and work on the rail line (NRC 2001). The NRC considers the amount of transportation (additional number of vehicles on the road) from the PFSF EIS to be representative of the transportation for the away-from-reactor ISFSI because the facilities are the same size. For the first phase of construction

[6] Table S–4 was prepared based on the assumption that spent fuel would be shipped from the reactor site to a reprocessing facility. However, because the analysis is addressing impacts that occur during transportation of the spent fuel, the type of facility to which it is being sent is not important. Therefore, the information provided by Table S–4 can be considered by the NRC in evaluating the impacts of the transportation of spent fuel from reactor sites to an away-from-reactor ISFSI.

for the PFSF, lasting about 18 months, the NRC concluded that the impacts on local transportation would have been SMALL to MODERATE. That analysis also found the transportation impacts of completing remaining facility construction would diminish along with a concurrent decline in the need for equipment, materials, and construction workers. The prior analysis concluded traffic impacts and increased wear and maintenance requirements would be highest (moderate impact) on local roads with low average daily traffic and less pronounced (small) for major transportation routes that have higher capacities. Specifically, peak construction traffic involving supply shipments and commuting workers was estimated at 450 vehicle trips per day (NRC 2001). This traffic was being added to local roads with annual average daily traffic counts between 325 and 565 vehicles per day (an increase in traffic ranging from 79 to 130 percent). This change in local traffic previously evaluated for the PFSF changed the level of service resulting in a conclusion of moderate impacts on traffic. Transportation of cask materials to construct 200 casks per year (an additional 6 truck trips per day) was also previously evaluated for the PFSF as not significantly adding to the daily traffic or projected impacts.

The impacts on traffic from construction of an away-from-reactor ISFSI at a different location are likely to be similar. The amount of additional traffic is not very large but because the ISFSI will likely be built in a remote location with limited existing roads, the impacts on local traffic may still be noticeable but not destabilizing. If the location of the ISFSI has an extensive existing road network, then the impacts may not be noticeable.

Construction of a rail line and siding to the PFSF would have required the movement of large quantities of excavated soils, ballast, and sub-ballast as well as the transportation of workers to construction areas and the same would be true for the away-from-reactor ISFSI, for which a similar rail line is assumed. The previous NRC impact analysis indicated that most materials and workers would be expected to travel to the site of the proposed rail siding by the interstate highways. Construction of the proposed rail line and siding would have required approximately 245,000 m^3 (320,000 yd^3) of ballast and sub-ballast (composed of crushed gravel or rock) obtained from existing commercial gravel pits in the area. Assuming a per-truck capacity of approximately 15.3 m^3 (20 yd^3) for movement of the ballast and sub-ballast, a total of approximately 32,000 two-way truck trips would have been required to transport the ballast and sub-ballast or 134 truck trips per day or approximately 13 vehicles per hour. The rail line construction workforce was estimated to be 125 workers contributing 250 vehicle trips per day for a total of 384 vehicle trips per day for rail line construction. This level of traffic was 4.5 percent of the interstate traffic; therefore, the NRC concluded impacts on transportation by construction of the rail line would have been small although temporarily adverse to feeder road traffic (i.e., noticeable but not destabilizing).

The impacts on traffic of building a rail line to an away-from-reactor ISFSI at a different location are likely to be similar. The amount of additional traffic is not very large, but because the ISFSI

will likely be built in a remote location with limited existing roads, the impacts on local traffic may still be noticeable but not destabilizing. If the location of the ISFSI has an extensive existing road network, then the impacts may not be noticeable.

Operation of an away-from-reactor ISFSI would result in small impacts on the local transportation system due to daily commuting of workers and shipment of fabricated steel liners for the storage casks and spent fuel transportation packages. The NRC previously estimated for the PFSF that an operations workforce of 43 workers would commute each day using individual private vehicles or light trucks. These workers would account for an increase of 86 vehicle trips per day on local roads during operations. The previous NRC analysis of impacts of the PFSF concluded this decrease in the volume of traffic generated by the storage facility relative to construction activities would not result in any degradation of the level of service on local roads (NRC 2001). Because of the small number of trips involved, the NRC concludes that the traffic impacts for an away-from-reactor ISFSI at a different location would also not be noticeable.

During the operation of the away-from-reactor ISFSI, spent fuel would be shipped from power plants to the facility. These shipments would be required to comply with applicable NRC and U.S. Department of Transportation (DOT) regulations for the transportation of radioactive materials in 10 CFR Parts 71 and 73 and 49 CFR Parts 107, 171—180, 390—397, as appropriate to the mode of transport. The radiological impacts on the public and workers of spent fuel shipments from a reactor have been previously evaluated by the NRC and found to be SMALL in several evaluations. A generic impact determination in 10 CFR 51.52, Table S–4, and the supporting analysis (AEC 1972) concluded that the environmental impacts of transportation of fuel and waste to and from a light water reactor under normal operations of transport and accidents in transport would be small.

The results of subsequent analyses of transportation impacts in *Final Environmental Statement on Transportation of Radioactive Material by Air and Other Modes* (NRC 1977) and *Reexamination of Spent Fuel Shipment Risk Estimates* (Sprung et al. 2000) confirmed that spent fuel transportation impacts are small. Additional site-specific analyses of transportation impacts for power plants that did not meet the conditions of 10 CFR 51.52 also concluded that the transportation radiological impacts would be small (NRC 2006c, 2008b, 2011a–d, 2013c). The NRC recently calculated spent fuel transportation risks for individual shipments under incident-free and accident conditions in *Spent Fuel Transportation Risk Assessment Final Report* (NRC 2014) based on current models, data, and assumptions. The analysis modeled transportation package response to accident conditions, such as impact force and fire, and calculated risks considering a range of truck and rail accidents of different severities, including those involving no release or loss of shielding, loss of shielding only, or loss of shielding and release. That analysis reconfirmed that the radiological impacts from spent fuel transportation conducted in compliance with NRC regulations are low. The NRC concluded that the

regulations for transportation of radioactive material are adequate to protect the public against unreasonable risk of exposure to radiation from spent fuel packages in transport (NRC 2014).

Considering that an away-from-reactor ISFSI would also receive shipments of spent fuel from more than one power plant, the radiological and nonradiological impacts from a comparable transportation scenario were previously evaluated for the PFSF (NRC 2001). That analysis calculated incident-free and accident risks from the shipment of 4,000 spent fuel packages, transported over a representative route from Maine to Utah over a 20-year period, and concluded the radiological impacts would have been SMALL. The resulting cumulative dose to the maximally exposed individual at the end of the 20-year period was 0.022 mSv (2.2 mrem).[7] The maximally exposed individual is an individual that is assumed for the purpose of bounding to be exposed to the radiation from all shipments. By comparison, NRC regulations at 10 CFR 20.1301 limit the annual radiation dose to any member of the public resulting from any licensed activity to 1 mSv (100 mrem). The PFSF incident-free and accident risk results were bounded by or comparable to results in 10 CFR 51.52, Table S–4, or the *Final Environmental Statement on Transportation of Radioactive Material by Air and Other Modes* (NRC 1977). Based on the PFSF analysis, the NRC concludes in the present analysis that the additional accumulated impacts from transportation of the entire inventory of spent fuel from multiple reactors to an away-from-reactor ISFSI would also be minor.

The operation of the away-from-reactor ISFSI would generate a small amount of LLW (e.g., used personal protection equipment) that would result in infrequent waste shipments to a licensed disposal facility. The small and infrequent number of shipments and compliance with NRC and the DOT packaging and transportation regulations would also limit potential worker and public radiological and nonradiological impacts from these waste shipments. Based on this analysis, the NRC concludes the impacts on traffic and to public and worker radiological and nonradiological safety from LLW shipments resulting from spent fuel storage activities beyond the licensed life of reactor operation would be small.

Based on the factors discussed above, the NRC concludes the impacts on traffic and public and worker radiological and nonradiological safety from construction and operation activities for an away-from-reactor ISFSI during short-term storage would be SMALL to MODERATE. The potential for a MODERATE impact is related to traffic and would depend on the characteristics at a particular site.

5.16.2 Long-Term Storage

During the long-term storage timeframe, the NRC assumes aging management activities would begin to identify stored spent fuel canisters requiring replacement. To evaluate the potential

[7] By way of comparison, the average annual dose to individuals from natural background radiation (e.g., solar radiation and radon) is 3.11 mSv/yr (311 mrem/yr) (NCRP 2009).

impacts, the NRC assumes a spent fuel DTS would be constructed to execute the replacement of canisters and casks. This facility would provide the capability to repackage spent fuel to replace damaged canisters or casks identified during regular inspections or aging management activities. The longer duration of storage is assumed to require eventual replacement of the away-from-reactor ISFSI and DTS facilities during the long-term storage timeframe. These replacement activities would generate additional waste material shipments.

The construction of a DTS would likely involve a smaller temporary workforce than the original construction workforce. A previously reviewed proposal to construct a spent fuel transfer facility at the Idaho National Engineering Laboratory (NRC 2004) estimated a construction workforce of 250 workers that would be employed for 2 years. Because the proposed Idaho transfer facility was designed to transfer a larger variety wastes than would be handled at an away-from-reactor storage facility, the NRC assumes the Idaho facility bounds the impacts of constructing a DTS at an away-from-reactor ISFSI. The resulting daily two-way traffic trips from this workforce (500 trips) would be comparable to the construction workforce traffic evaluated in Section 5.16.1 for initial storage facility construction and therefore traffic impacts would range from not noticeable to noticeable but not destabilizing. Operation of the dry spent fuel transfer facility would involve fewer workers than the construction workforce (60 workers were previously projected for operation of the Idaho transfer facility [NRC 2004]), and therefore the commuting traffic impacts during the operational period would be minor.

The operation of the DTS would involve shipment of materials including new canisters and would generate a small amount of LLW (e.g., used canisters and used personal protection equipment) that would result in infrequent waste shipments to a licensed disposal facility. The small and infrequent number of shipments and compliance with NRC and DOT packaging and transportation regulations would also limit potential worker and public radiological and nonradiological impacts from these waste shipments. Based on this analysis, the NRC concludes the impacts on traffic and to public and worker radiological and nonradiological safety from LLW shipments resulting from spent fuel storage activities during the long-term storage timeframe would be minimal.

The replacement of the storage facility, DTS, and an increase in repackaging would generate additional nonradiological and LLW that would need to be shipped offsite for disposal. As described in Section 5.15.2, the estimated quantity of waste from replacement activities would be about 315,000 m^3 (412,000 yd^3) of nonhazardous waste or LLW. Assuming this waste is shipped in roll-off containers with a capacity of 15 m^3 (20 yd^3), the total number of truck shipments estimated is 20,600. If replacement were phased over a 5-year period and shipping occurred 5 days per week, 16 shipments per day would be needed. The activities would not significantly increase the magnitude of traffic generated by storage operations occurring each year, and operational transportation impacts would continue to be minor.

Based on the preceding analysis, the overall transportation impacts of continued operations of the away-from-reactor ISFSI during the long-term storage timeframe would be SMALL to MODERATE. The potential for a MODERATE impact is related to traffic and would depend on the characteristics at a particular site.

5.16.3 Indefinite Storage

Assuming no repository becomes available, spent fuel would be stored indefinitely in the away-from-reactor ISFSI. Annual transportation activities and associated environmental impacts would be similar to that analyzed for storage facility operations and DTS construction and operations evaluated in Section 5.16.2. The same operations and maintenance activities described in Section 5.16.2 would occur repeatedly because the spent fuel would remain at the facility indefinitely. Based on this information, the NRC concludes that the transportation impacts during indefinite storage at an away-from-reactor ISFSI would be SMALL to MODERATE. The potential for a MODERATE impact is related to traffic and would depend on the characteristics at a particular site.

5.17 Public and Occupational Health

This section describes public and occupational health impacts caused by the continued storage of spent fuel at an away-from-reactor ISFSI. For the purposes of assessing radiological impacts, impacts are considered to be SMALL if releases and doses do not exceed dose limits prescribed by NRC regulations. This definition of SMALL applies to occupational doses as well as to doses to individual members of the public.

Transportation-related public and occupational health impacts are addressed in Section 5.16.

5.17.1 Short-Term Storage

In the PFSF EIS (NRC 2001), the NRC examined human health impacts related to construction and operation of an away-from-reactor ISFSI. The analysis addressed in detail the human health impacts resulting from construction, operation, and potential accidents at the proposed PFSF site. This included nonradiological impacts from construction and operation of the proposed PFSF, as well as analysis of the radiological impacts from the spent fuel stored at the facility, including potential radiological accidents and their consequences. The type and frequency of nonradiological injuries and the types of pollutant emissions at an away-from-reactor ISFSI would be similar to those for the PFSF because of the similarities between the facilities. The types of radiological releases from the two facilities would also be similar for the same reason.

The nonradiological health impacts from the construction of a facility of this size include the normal hazards associated with construction, such as pollutants (e.g., dust), and fatal and

nonfatal occupational injuries, such as falls or overexertion. The detailed analysis in the PFSF EIS used extensive data from the Bureau of Labor Statistics and the Occupational Safety and Health Administration, as well as discussion of the requirements of the Occupational Safety and Health Administration's General Industry Standards (29 CFR Part 1910) and Construction Industry Standards (29 CFR Part 1926) to conclude that the nonradiological health impacts would have been SMALL. The results were typical for an industrial facility of this size and would also apply to a similarly sized away-from-reactor ISFSI at any location. Impacts of nonradiological accidents during operations would be even less because of the smaller workforce and because activities carried out during operations will generally be lower risk activities (e.g., monitoring). Therefore, the NRC concludes that human health impacts from construction and operation of the ISFSI would be minor.

Radiological impacts at an away-from-reactor ISFSI would not occur until operation commenced and spent fuel storage casks were brought on site. The detailed analyses in the PFSF EIS used the review and evaluation of the PFSF Safety Analysis Report to assess the radiological impacts on the general public (i.e., potential dose to a hypothetical maximally exposed individual located at the boundary of the proposed facility as well as known nearby residents) and estimated dose to occupational personnel.

The analyses presented in the PFSF EIS (NRC 2001) provide evidence that public and occupational doses would have been maintained significantly below the dose limits established by 10 CFR Part 72 and 10 CFR Part 20. The NRC assumes that an away-from-reactor ISFSI at any site has the same spent fuel capacity and a similar physical size; therefore, doses to workers and to the public would be similar to those calculated for the PFSF. The NRC concludes that public and occupational health impacts would be SMALL.

5.17.2 Long-Term Storage

As discussed in the previous section, in the PFSF EIS (NRC 2001) the NRC examined human health impacts related to construction and operation of an away-from-reactor ISFSI. The analysis addressed in detail the public and occupational human health impacts resulting from construction, operation, and potential accidents at the proposed PFSF site. The occupational tasks were grouped into four categories consisting of (1) handling (i.e., receiving, transferring, and moving) of the spent fuel canisters and casks; (2) security, inspection, and maintenance activities; (3) administration and management; and (4) facility construction. The analyses for categories 1, 2, and 3 provide a similar analysis for the transferring, handling, and aging management activities that would be required for long-term storage of spent fuel being addressed by this GEIS. The analyses presented in the PFSF EIS (NRC 2001) provide evidence that public and occupational doses would be maintained significantly below the dose limits established by 10 CFR Part 72 and 10 CFR Part 20. In addition, these regulations would also require a licensed away-from-reactor ISFSI to maintain an ALARA (as low as is reasonably achievable) program, which would likely reduce the doses described in the PFSF EIS (NRC

2001). The NRC assumes that an away-from-reactor ISFSI at any site has the same spent fuel capacity and a similar physical size; therefore, doses to workers and to the public would be similar to those calculated for the PFSF. The NRC concludes that public and occupational health impacts from operations during the long-term storage timeframe would be minor.

During the long-term storage timeframe, the NRC expects that the licensee would have to build a DTS for repackaging of spent fuel canisters. The operation of the DTS would involve increased doses to workers and a very small increase in dose levels at the site boundary (estimated at roughly 0.8 km [0.5 mi] based on the size of the site). However, the licensee would still be required to comply with the dose limits established by 10 CFR Part 72 and 10 CFR Part 20. In addition, the NRC assumes that the casks, pads, canister transfer building, and DTS would require replacement during the long-term storage timeframe. The health impacts related to these activities would be similar to those for the original construction of the facility.

Based on the information above, the NRC concludes that the public and occupational health impacts of ISFSI operations and construction and demolition activities during the long-term timeframe of storage would be SMALL.

5.17.3 Indefinite Storage

The public and occupational impacts of continuing to store spent fuel without a repository would be similar to those described in Section 5.17.2. The types of activities (operation, maintenance, and replacement) and associated human health impacts would remain the same. The main difference is that these activities would be repeated over a longer period of time. Based on this information, the NRC concludes that the impacts on human health during long-term storage at an away-from-reactor ISFSI would be SMALL.

5.18 Environmental Impacts of Postulated Accidents

In this section, the NRC considers the environmental impacts of postulated accidents involving continued storage of spent fuel at an away-from-reactor ISFSI. The fuel will be stored in dry storage casks licensed by the NRC. As discussed in Chapter 1, the NRC assumes that a DTS would be constructed to facilitate canister and cask replacement for long-term and indefinite storage. The consequences of accidents for a dry cask storage facility are summarized in Sections 4.18.1.2 and 4.18.2.2. The types and consequences of accidents for the away-from-reactor ISFSI are represented by the Chapter 4 results because of the similarities between the at-reactor ISFSIs and any away-from-reactor ISFSI (i.e., because the types of casks used to store the fuel and the process for licensing those casks are the same).

This section of the GEIS follows a different format than the rest of the document. Because the impacts from accidents are substantially the same across the three timeframes—short-term, long-term, and indefinite—the GEIS presents the various accident types only once.

NRC regulations at 10 CFR Part 72, "Licensing Requirements for the Independent Storage of Spent Nuclear Fuel, High-Level Radioactive Waste, and Reactor-Related Greater than Class C Waste," require that structures, systems, and components important to safety shall be designed to withstand the effects of natural phenomena (such as, earthquakes, tornadoes, hurricanes) and human-induced events without loss of capability to perform their safety functions. NRC siting regulations at 10 CFR Part 72, Subpart E, "Siting Evaluation Factors," also require applicants to consider, among other things, physical characteristics of sites that are necessary for safety analysis or that may have an impact on plant design (e.g., the design earthquake). These characteristics are to be identified and characterized so that they may be taken into consideration when determining the acceptability of the site and design criteria of the facility.

In the PFSF EIS, the NRC examined environmental impacts from accidents at the proposed PFSF. This included two events (i.e., extreme winds and 100 percent air duct blockage) that could cause higher-than-normal radiation exposures to workers. In that analysis, the NRC postulated that the high-wind event resulted in wind-borne missiles that damaged the concrete overpack, which resulted in reduced shielding. The reduced shielding would cause slightly higher occupational doses and only negligible increases in radiation doses to a member of the public at the boundary of the owner-controlled area. The NRC considered the occupational doses that would be received upon transfer of the undamaged canister to a replacement cask. The NRC estimated that the dose from transfer operations would result in a collective occupational dose of 2.47 person-mSv (247 person-mrem). In the second event involving blocked vents, the NRC estimated that the dose to a worker that removes the blockage from the vents would be 0.586 mSv (58.6 mrem) to the hands and forearms, and 0.386 mSv (38.6 mrem) to the chest, which is below regulatory limits for workers (NRC 2001). Because of the similarities between the PFSF and any away-from-reactor ISFSI (i.e., because the types of casks used to store the fuel and the process for licensing those casks are the same), the results would be similar to those for the PFSF. Therefore, the impacts of these accidents would be minor.

In addition to the credible events described above, for the PFSF the NRC also considered an accident, not considered credible, in which a canister leaks. The NRC estimated that the resulting total effective dose equivalent resulting from a 30-day leak to an individual at the owner-controlled area boundary was 0.76 mSv (76 mrem). Radiation doses after the first 30 days that result from radioactive material deposited on the ground were 0.027 mSv/yr (2.7 mrem/yr) (NRC 2001). These values are below dose limits in 10 CFR Part 20 and 10 CFR 72.106. As a result, the NRC determined that these impacts would have been SMALL (NRC 2001). Because of the similarities between the facilities, the results would be similar for any away-from-reactor ISFSI and the impacts would be minor.

While the results described from the PFSF EIS are specific to that facility, the PFSF and away-from-reactor ISFSI are similar and subject to the same regulations for casks and operations.

The NRC therefore concludes that these results are representative of the impacts for an away-from-reactor ISFSI at a different location. Therefore, the NRC concludes that the impacts of postulated accidents would be SMALL during the three storage timeframes.

5.19 Potential Acts of Sabotage or Terrorism

Section 4.19 provides background regarding the NRC approach to addressing acts of terrorism in relation to dry cask storage. That information is also applicable to an away-from-reactor ISFSI. As with the accident impacts analysis in Section 5.18, the impacts from terrorist acts are substantially the same across the three timeframes—short-term, long-term, and indefinite—and are therefore discussed only once.

The same safeguards regulations (10 CFR Part 72, Subpart H) apply to both an at-reactor ISFSI under a site-specific license and an away-from-reactor ISFSI. Safeguard requirements at at-reactor specifically licensed ISFSIs are described in Section 4.19.2 of this GEIS. In that section, the NRC concluded that both the probability and consequences of a successful attack on an at-reactor ISFSI are low and, therefore, the environmental risk is SMALL. Therefore, the NRC concludes that the results from Section 4.19.2 would also be applicable to an away-from-reactor ISFSI, and the associated impacts would be SMALL during the three storage timeframes.

5.20 Summary

The impact levels determined by the NRC in the previous sections for away-from-reactor dry cask storage of spent fuel are summarized in Table 5-1. For most impact areas, the impact levels are denoted as SMALL, MODERATE, and LARGE as a measure of their expected adverse environmental impacts. In other impact areas, the impact levels are denoted according to the types of findings required under applicable regulatory or statutory schemes (e.g., “disproportionately high and adverse” for environmental justice impacts).

For a number of the resource areas, the impact determinations for all three timeframes are SMALL. For air quality and terrestrial ecology, there is the potential for a MODERATE impact during the construction of the ISFSI. For environmental justice, special status species and habitats, and historic and cultural resources, the results are highly site-specific. While it is possible the ISFSI could be built and operated with no noticeable impacts on these resources, a definitive conclusion cannot be drawn in this GEIS. For socioeconomics (taxes), aesthetics, and traffic, there are impacts that could be greater than SMALL that will continue throughout the existence of the ISFSI. The tax impacts are beneficial in nature. Finally, there is the potential for a MODERATE impact from the disposal of nonradioactive waste in the indefinite timeframe if that waste exceeds the capacity of nearby landfills.

Table 5-1. Summary of Environmental Impacts of Continued Away-from-Reactor Storage

Resource Area	Short-Term Storage	Long-Term Storage	Indefinite Storage
Land Use	SMALL	SMALL	SMALL
Socioeconomics	SMALL (adverse) to LARGE (beneficial)	SMALL (adverse) to LARGE (beneficial)	SMALL (adverse) to LARGE (beneficial)
Environmental Justice	Disproportionately high and adverse impacts are not expected		
Air Quality	SMALL to MODERATE	SMALL	SMALL
Climate Change	SMALL	SMALL	SMALL
Geology and Soils	SMALL	SMALL	SMALL
Surface-Water			
Quality	SMALL	SMALL	SMALL
Consumptive Use	SMALL	SMALL	SMALL
Groundwater			
Quality	SMALL	SMALL	SMALL
Consumptive Use	SMALL	SMALL	SMALL
Terrestrial Resources	SMALL to MODERATE	SMALL	SMALL
Aquatic Ecology	SMALL	SMALL	SMALL
Special Status Species and Habitats	Impacts for Federally listed threatened and endangered species and EFH would be determined as part of the consultations for the ESA and the Magnuson–Stevens Fishery Conservation and Management Act		
Historic and Cultural Resources	SMALL to LARGE	SMALL to LARGE	SMALL to LARGE
Noise	SMALL	SMALL	SMALL
Aesthetics	SMALL to MODERATE	SMALL to MODERATE	SMALL to MODERATE
Waste Management			
LLW	SMALL	SMALL	SMALL
Mixed Waste	SMALL	SMALL	SMALL
Nonradioactive Waste	SMALL	SMALL	SMALL to MODERATE
Transportation			
Traffic	SMALL to MODERATE	SMALL to MODERATE	SMALL to MODERATE
Health	SMALL	SMALL	SMALL
Public and Occupational Health	SMALL	SMALL	SMALL
Accidents	SMALL	SMALL	SMALL
Sabotage or Terrorism	SMALL	SMALL	SMALL

5.21 References

10 CFR Part 20. *Code of Federal Regulations*, Title 10, *Energy*, Part 20, "Standards for Protection Against Radiation." Washington, D.C.

10 CFR Part 51. *Code of Federal Regulations*, Title 10, *Energy*, Part 51, "Environmental Protection Regulations for Domestic Licensing and Related Regulatory Functions." Washington, D.C.

10 CFR Part 71. *Code of Federal Regulations*, Title 10, *Energy,* Part 71, "Packaging and Transportation of Radioactive Material." Washington, D.C.

10 CFR Part 72. *Code of Federal Regulations*, Title 10, *Energy,* Part 72, "Licensing Requirements for the Independent Storage of Spent Nuclear Fuel, High-Level Radioactive Waste, and Reactor-Related Greater Than Class C Waste." Washington, D.C.

10 CFR Part 73. *Code of Federal Regulations*, Title 10, *Energy,* Part 73, "Physical Protection of Plants and Materials." Washington, D.C.

29 CFR Part 1910. *Code of Federal Regulations*, Title 29, *Labor*, Part 1910*,* "Occupational Safety and Health Standards." Washington, D.C.

29 CFR Part 1926. *Code of Federal Regulations*, Title 29, *Labor,* Part 1926, "Safety and Health Regulations for Construction." Washington, D.C.

36 CFR Part 60. *Code of Federal Regulations*, Title 36, *Parks, Forests, and Public Property,* Part 60, "National Register of Historic Places." Washington, D.C.

36 CFR Part 800. *Code of Federal Regulations*, Title 36, *Parks, Forests, and Public Property*, Part 800, "Protection of Historic Properties." Washington, D.C.

40 CFR Part 51. *Code of Federal Regulations*, Title 40, *Protection of the Environment,* Part 51, "Requirements for Preparation, Adoptions, and Submittal of Implementation Plans." Washington, D.C.

40 CFR Part 52. *Code of Federal Regulations*, Title 40, *Protection of the Environment*, Part 52, "Approval and Promulgation of Implementation Plans." Washington, D.C.

40 CFR Part 93. *Code of Federal Regulations*, Title 40, *Protection of the Environment,* Part 93, "Determining Conformity of Federal Actions to State or Federal Implementation Plans." Washington, D.C.

49 CFR Part 107. *Code of Federal Regulations*, Title 49, *Transportation,* Part 107, "Hazardous Materials Program Procedures." Washington, D.C.

49 CFR Parts 171–180. *Code of Federal Regulations*, Title 49, *Transportation*, Parts 171−180, "Hazardous Materials Regulations." Washington, D.C.

49 CFR Parts 390–397. *Code of Federal Regulations*, Title 49, *Transportation*, Parts 390–397, "Federal Motor Carrier Safety Regulations." Washington, D.C.

50 CFR Part 402. *Code of Federal Regulations*, Title 50, *Wildlife and Fisheries*. "Interagency Cooperation—Endangered Species Act of 1973, as Amended." Washington, D.C.

50 CFR Part 600. *Code of Federal Regulations*, Title 50, *Wildlife and Fisheries*. "Magnuson-Stevens Act Provisions." Washington, D.C.

69 FR 52040. August 24, 2004. "Policy Statement on the Treatment of Environmental Justice Matters in NRC Regulatory and Licensing Actions." *Federal Register*, U.S. Nuclear Regulatory Commission, Washington, D.C.

AEC (U.S. Atomic Energy Commission). 1972. *Environmental Survey of Transportation of Radioactive Materials to and From Nuclear Power Plants*. WASH–1238, Washington, D.C. Available at http://www.osti.gov/energycitations/product.biblio.jsp?osti_id=4569134.

Bald and Golden Eagle Protection Act of 1940, as amended. 16 USC 668-668d *et seq*.

Clean Air Act, as amended. 42 USC 7401 *et seq.*

Clean Water Act (See Federal Water Pollution Control Act of 1972).

Coastal Zone Management Act of 1972, as amended. 16 USC 1451 *et seq*.

DOE (U.S. Department of Energy). 2002. *Final Environmental Impact Statement for a Geologic Repository for the Disposal of Spent Nuclear Fuel and High-Level Radioactive Waste at Yucca Mountain, Nye County, Nevada*. DOE/EIS–0250, Office of Civilian Radioactive Waste Management, Washington, D.C. Accession No. ML14024A327.

DOE (U.S. Department of Energy). 2008. *Final Supplemental Environmental Impact Statement for a Geologic Repository for the Disposal of Spent Nuclear Fuel and High-Level Radioactive Waste at Yucca Mountain, Nye County, Nevada*. DOE/EIS–0250F–S1, Washington, D.C. Accession No. ML081750191.

DOE (U.S. Department of Energy). 2013. *Strategy for the Management and Disposal of Used Nuclear Fuel and High-Level Radioactive Waste*. Washington, D.C. Accession No. ML13011A138.

Donnell, J. 1998. *Response to RAI LA 1-6 Private Fuel Storage Facility Docket No. 72-22/TAC No. L22462 Private Fuel Storage LLC*. Private Fuel Storage LLC, La Crosse, Wisconsin. Accession No. ML010260218.

Endangered Species Act (ESA), as amended. 16 USC 1531 *et seq*.

EPA (U.S. Environmental Protection Agency). 1974. *Information on Levels of Environmental Noise Requisite to Protect Public Health and Welfare with an Adequate Margin of Safety*, EPA550/9–74–004, Research Triangle Park, North Carolina. Accession No. ML101790269.

EPA (U.S. Environmental Protection Agency). 2013a. "Clean Energy: Calculations and References." Washington, D.C. Accession No. ML13205A377.

EPA (U.S. Environmental Protection Agency). 2013b. *Inventory of U.S. Greenhouse Gas Emissions and Sinks: 1990–2011*. EPA 430-R-13-001, Washington, D.C. Accession No. ML13331A473.

EPA (U.S. Environmental Protection Agency). 2013c. *Municipal Solid Waste in the United States: 2011 Facts and Figures*. EPA 530-R-13-001, Washington, D.C. Available at http://www.epa.gov/osw/nonhaz/municipal/pubs/MSWcharacterization_fnl_060713_2_rpt.pdf.

Federal Water Pollution Control Act of 1972, as amended (also referred to as the Clean Water Act). 33 USC 1251 *et seq.*

Fish and Wildlife Coordination Act of 1934, as amended. 16 USC 661-667e *et seq.*

Foster Wheeler (Foster Wheeler Environmental Corporation). 2003. Letter from D.I. Rogers, Jr. to NRC, dated November 14, 2003, regarding “Idaho Spent Fuel (ISF) Facility Submittal of Amendment 3 to License Application, Docket No. 72.25, TAC No. L23389.” Morris Plains, New Jersey. Accession No. ML033240044.

FWS/NMFS (Fish and Wildlife Service/National Marine Fisheries Service). 1998. *Endangered Species Act Consultation Handbook: Procedures for Conducting Consultation and Conference Activities Under Section 7 of the Endangered Species Act*. Washington, D.C. Accession No. ML12325A215.

LES (Louisiana Energy Services, LLC). 1998. Letter from R.J. Jensen to S.A. Jackson, dated April 22, 1998, “In the Matter of Louisiana Energy Services, Docket No. 70–3070–ML.” ADAMS Legacy Library Accession No. 9804240190.

Magnuson-Stevens Fishery Conservation and Management Act of 1976, as amended. 16 USC 1801 *et seq*.

Marine Mammal Protection Act of 1972, as amended. 16 USC 1361 *et seq*.

Migratory Bird Treaty Act of 1918, as amended. 16 USC 703-712 *et seq*.

National Environmental Policy Act of 1969 (NEPA), as amended. USC 4321 *et seq*.

National Historic Preservation Act (NHPA), as amended. 16 USC 470 *et seq*.

NCRP (National Council on Radiation Protection and Measurements). 2009. *Ionizing Radiation Exposure of the Population of the United States*. Report 160, Bethesda, Maryland.

NRC (U.S. Nuclear Regulatory Commission). 1977. *Final Environmental Statement on Transportation of Radioactive Material by Air and Other Modes*. NUREG–0170, Washington, D.C. Accession No. ML12192A283.

NRC (U.S. Nuclear Regulatory Commission). 1998. *In the Matter of Louisiana Energy Services, L.P. (Claiborne Enrichment Center)*. CLI–98–3, 47 NRC 77, Washington, D.C. Accession No. ML020560604.

NRC (U.S. Nuclear Regulatory Commission). 2001. *Final Environmental Impact Statement for the Construction and Operation of an Independent Spent Fuel Storage Installation on the Reservation of the Skull Valley Band of Goshute Indians and the Related Transportation Facility in Tooele County, Utah*. NUREG–1714, Volume 1, Washington, D.C. Accession No. ML020150170.

NRC (U.S. Nuclear Regulatory Commission). 2002. *Final Generic Environmental Impact Statement for Decommissioning of Nuclear Facilities, Supplement 1 Regarding the Decommissioning of Nuclear Power Reactors*. NUREG-0586, Volumes 1 and 2, Washington, D.C. Accession Nos. ML023470327, ML023500228.

NRC (U.S. Nuclear Regulatory Commission). 2004. *Environmental Impact Statement for the Proposed Idaho Spent Fuel Facility at the Idaho National Engineering and Environmental Laboratory in Butte County, Idaho*. NUREG–1773, Washington, D.C. Accession No. ML040490135.

NRC (U.S. Nuclear Regulatory Commission). 2006a. Letter from W.H. Ruland to J.D. Parkyn dated February 21, 2006, regarding “Issuance of Materials License No. SNM–2513 for the Private Fuel Storage Facility (TAC No. L23821).” Washington, D.C. Accession No. ML060450412.

NRC (U.S. Nuclear Regulatory Commission). 2006b. *Consolidated Decommissioning Guidance: Decommissioning Process for Materials Licensees.* NUREG–1757, Revision 2, Washington, D.C. Accession No. ML063000243.

NRC (U.S. Nuclear Regulatory Commission). 2006c. *Final Environmental Impact Statement for an Early Site Permit (ESP) at the North Anna ESP Site*. NUREG–1811, Volume 1, Washington, D.C. Accession No. ML063480261.

NRC (U.S. Nuclear Regulatory Commission). 2008a. *U.S. Nuclear Regulatory Commission Staff's Adoption Determination Report for the U.S. Department of Energy's Environmental Impact Statements for the Proposed Geologic Repository at Yucca Mountain*. Washington, D.C. Accession No. ML082420342.

NRC (U.S. Nuclear Regulatory Commission). 2008b. *Final Environmental Impact Statement for an Early Site Permit (ESP) at the Vogtle Electric Generating Plant Site*. NUREG–1872, Volume 1, Washington, D.C. Accession No. ML082240145.

NRC (U.S. Nuclear Regulatory Commission). 2011a. *Final Environmental Impact Statement for the Combined License (COL) for Calvert Cliffs Nuclear Power Plant Unit 3.* NUREG–1936, Volumes 1 and 2, Washington, D.C. Accession Nos. ML11129A167, ML11129A179.

NRC (U.S. Nuclear Regulatory Commission). 2011b. *Final Environmental Impact Statement for the Combined Licenses (COLs) for South Texas Project Electric Generating Station Units 3 and 4*. NUREG–1937, Washington, D.C. Accession No. ML11049A000.

NRC (U.S. Nuclear Regulatory Commission). 2011c. *Final Environmental Impact Statement for the Combined Licenses (COLs) for Virgil C. Summer Nuclear Station, Units 2 and 3*. NUREG–1939, Volumes 1 and 2, Washington, D.C. Accession Nos. ML11098A044, ML11098A057.

NRC (U.S. Nuclear Regulatory Commission). 2011d. *Final Environmental Impact Statement for Combined Licenses (COLs) for Comanche Peak Nuclear Power Plant Units 3 and 4*. NUREG–1943, Volumes 1 and 2, Washington, D.C. Accession Nos. ML11131A001, ML11131A002.

NRC (U.S. Nuclear Regulatory Commission). 2012. *Environmental Impact Statement for Combined Licenses (COLs) for Levy Nuclear Plant Units 1 and 2—Final Report*. NUREG–1941, Volume 1, Washington, D.C. Accession No. ML12100A063.

NRC (U.S. Nuclear Regulatory Commission). 2013a. *Generic Environmental Impact Statement for License Renewal of Nuclear Plants*. NUREG–1437, Revision 1, Washington, D.C. Accession No. ML13107A023.

NRC (U.S. Nuclear Regulatory Commission). 2013b. *Attachment 1—Staff Guidance for Greenhouse Gas and Climate Change Impacts for New Reactor Environmental Impact Statements*. COL/ESP-ISG-026, Washington, D.C. Accession No. ML12326A811.

NRC (U.S. Nuclear Regulatory Commission). 2013c. *Final Environmental Statement for the Combined License (COL) for Enrico Fermi Unit 3*. NUREG–2105, Volumes 1 and 2, Washington, D.C. Accession Nos. ML12307A172, ML12307A176.

NRC (U.S. Nuclear Regulatory Commission). 2014. *Spent Fuel Transportation Risk Assessment: Final Report*. NUREG–2125, Washington D.C. Accession No. ML14031A323.

PFS (Private Fuel Storage, LLC.). 2001. *Environmental Report, Private Fuel Storage Facility, Skull Valley Indian Reservation, Tooele County, Utah (Revision 14)*. La Crosse, Wisconsin.

PFS (Private Fuel Storage, LLC.). 2012. Letter from R.M. Palmberg to NRC dated December 20, 2012, regarding "Termination of NRC License No. SNM–25 13 for Private Fuel Storage LLC." La Crosse, Wisconsin. Accession No. ML12356A063.

Sprung, J.L., D.J. Ammerman, N.L. Breivik, R.J. Dukart, F.L. Kanipe, J.A. Koski, G.S. Mills, K.S. Neuhauser, H.D. Radloff, R.F. Weiner, and H.R. Yoshimura. 2000. *Reexamination of Spent Fuel Shipment Risk Estimates*. NUREG/CR–6672, Sandia National Laboratory, Albuquerque, New Mexico. Accession No. ML003698324.

6.0 Cumulative Impacts

The Council on Environmental Quality's (CEQ's) regulations implementing the National Environmental Policy Act of 1969, as amended (NEPA), define a cumulative impact as "… the impact on the environment that results from the incremental impact of [an] action when added to other past, present, and reasonably foreseeable future actions, regardless of what agency (Federal or non-Federal) or person undertakes such other actions" (Title 40 of the *Code of Federal Regulations* 1508.7 [40 CFR 1508.7]). Cumulative impacts can result from individually minor, but collectively significant, actions taking place over a period of time. It is possible that an impact that may be SMALL by itself could result in a MODERATE or LARGE cumulative impact when considered in combination with the impacts of other actions on the affected resource. For example, if a resource is regionally declining or imperiled, even a SMALL individual impact could be substantial if it contributes to or accelerates the overall resource decline.

6.1 Methodology for Assessing Cumulative Impacts

The cumulative impacts assessment in this *Generic Environmental Impact Statement for Continued Storage of Spent Nuclear Fuel* (GEIS) examines the incremental impact of continued storage on each resource area in combination with other past, present, and reasonably foreseeable actions. The general approach for assessing cumulative impacts is based on principles and guidance described in the CEQ's *Considering Cumulative Effects under the National Environmental Policy Act* (CEQ 1997). In addition, the U.S. Nuclear Regulatory Commission (NRC) reviewed the relevant portions of the U.S. Environmental Protection Agency's (EPA's) *Consideration of Cumulative Impacts in EPA Review of NEPA Documents* (EPA 1999) and *The NEPA Task Force Report to the Council on Environmental Quality on Modernizing NEPA Implementation* (CEQ 2003). Based on the review of these documents, and NRC's regulations implementing NEPA in 10 CFR Part 51, the NRC developed the following methodology for assessing cumulative impacts in this GEIS:

1. During the scoping and consultation phases of the environmental review, the NRC identified potential cumulative impact issues associated with the continued storage of spent nuclear fuel (spent fuel). The NRC included other actions and issues later as they were identified.

2. The individual resources, ecosystems, and human communities identified in the affected environment sections of Chapter 3 become the resource parameters analyzed in this analysis. Similarly, direct and indirect impacts identified in Chapters 4 and 5 form the basis for the analysis in this chapter.

3. The spatial boundaries for the cumulative impact assessment are unique to each resource area and defined in resource-specific analyses in Section 6.4. Each geographic area of

analysis includes the area surrounding a continued storage site and extends to where the resource would be affected by continued storage and could have overlapping impacts with other past, present, and reasonably foreseeable future actions.

4. The temporal boundary (i.e., the timeframe) for this analysis is defined in Section 6.2. The timeframe of the cumulative impacts analysis extends from the past history of impacts on each resource through decommissioning of the spent fuel pool, at-reactor independent spent fuel storage installation (ISFSI), and away-from-reactor ISFSI (referred to as storage facilities). The temporal boundary is the same for all resource-specific analyses below (Section 6.4).

5. The NRC evaluated cumulative impacts by considering the incremental impacts from continued storage in combination with other past, present, and reasonably foreseeable future actions. The description of the affected environment in Chapter 3 for at-reactor storage facilities and Chapter 5 for away-from-reactor ISFSIs serves as the *baseline* for the cumulative impacts analysis, including the effects of past actions. The *incremental impacts* related to continued storage are described and characterized in Chapter 4 for at-reactor storage facilities and Chapter 5 for away-from-reactor storage facilities. The NRC identified *past, present, and reasonably foreseeable future actions*. These actions include projects and activities that could impact resources, ecosystems, or human communities within the defined spatial and temporal bounds. Section 6.3.1 describes the general national, regional, and local trends and activities (general trends) that occur near at-reactor and away-from-reactor storage facilities, such as urbanization or energy production. These general trends are the current and likely future trends in general types of activities that occur near storage facilities. Section 6.3.2 describes other NRC-regulated or spent fuel-related activities that may occur during the period of continued storage, such as decommissioning of the nuclear power plant.

6. Cumulative impacts for each resource area are assessed in Section 6.4. Overlapping or cumulative impacts could occur if the action or general trend affects the same resource, ecosystem, or human community as those affected by the continued storage of spent fuel within the defined temporal and spatial bounds. Because of the various resource parameters (e.g., an ecosystem versus a human community) and the different spatial boundaries (e.g., a river versus a county) for each resource area, some activities or general trends affect a subset of the resource areas discussed below. The level of detail describing the various cumulative impacts is commensurate with the impact significance.

7. Conclusions for resource and systems analyses in these sections use the same three-level classification scheme—SMALL, MODERATE, or LARGE—that was used for the at-reactor and away-from-reactor storage facility analyses, as defined in Chapter 1. For resource areas in which the cumulative impact could range based on the site-specific conditions, the below analyses describe the general conditions for which a SMALL, MODERATE, or

LARGE impact would occur. A conclusion is provided for at-reactor and away-from-reactor sites and for all three timeframes (short-term, long-term, and indefinite storage) discussed in Chapters 4 and 5.

8. The analysis in this chapter, as in the rest of this GEIS, provides a generic analysis that will ultimately be used to support NRC's decision regarding a request to license or relicense a reactor or site-specific ISFSI. A site-specific review is required before the NRC provides a license for any reactor or ISFSI for which an application for a specific license has been submitted. Therefore, the analysis in this chapter would be considered along with the site-specific analysis for a specific license.

6.2 Spatial and Temporal Bounds of the Cumulative Impacts Assessment

The spatial boundaries for the cumulative impact assessment are resource-specific and identified within each resource-specific analysis below in Section 6.4. The NRC set the spatial boundaries to encompass the geographic area of the affected resources and the distances at which impacts associated with past, present, and reasonably foreseeable actions may occur.

In addition to impacts accumulating over a geographic area, impacts can also accumulate or develop over time. Therefore, the cumulative impacts assessment looks across a specific timeline that includes the past, present, and reasonably foreseeable future (CEQ 1997). The temporal boundary for this analysis includes activities that could occur through decommissioning of at-reactor or away-from-reactor storage facilities.

The spatial and temporal boundaries describe the maximum distance or time considered in the analysis. However, even if a project falls within these overall temporal and spatial bounds, the effects many not overlap in space and time with the effects of continued storage, especially for projects with short-term impacts. For example, constructing a small dock along a shoreline would have temporary impacts on aquatic resources. Unless the dock was constructed during the period of continued storage, the impacts would not likely overlap with potential impacts from continued storage. On the other hand, construction and operation of a dam could have long-term impacts that last several decades. Therefore, the impacts could be overlapping with continued storage, even if dam operations ceased several years before continued storage. Resource-specific analyses in Section 6.4 only describe activities that would overlap in both space and time with potential impacts from continued storage.

6.3 Past, Present, and Reasonably Foreseeable Actions

This section describes the NRC's methodology for identifying past, present, and reasonably foreseeable actions. As described in CEQ guidance (CEQ 1997), identifying reasonably

foreseeable future actions is a critical component of a cumulative impacts analysis. However, the CEQ also recognizes that agencies should not engage in speculation in an effort to identify all actions that could contribute to overall potential cumulative effects. Given the national scope of the U.S. nuclear industry and the long timeframes that are under consideration in this GEIS as described in Chapter 1, it is not practical to consider all potential public and private projects. For this reason, reasonably foreseeable future actions that will be considered in the cumulative effects analysis include the following:

- general trends or activities that the NRC has previously determined to occur near at-reactor and away-from-reactor storage facilities,
- programmatic actions for which Federal agencies have prepared and published NEPA documents,
- programs and policies enabled by legislation, and
- NRC activities or connected actions that could occur at or beyond the storage site during continued storage.

The following sections summarize the past, present, and reasonably foreseeable actions considered in this cumulative analysis, including both general trends in Section 6.3.1 and other NRC-regulated or spent fuel-related activities in Section 6.3.2.

6.3.1 General Trends and Activities

Because of the uncertainty of specific activities that may occur over very long time periods in the future, the NRC considered the general types of activities that occur near at-reactor and away-from-reactor storage facilities and the likely future trends of these activities. This approach follows CEQ (1997) guidance that recommends looking at the trends of various actions to analyze the potential activities that could occur through the reasonably foreseeable future, especially in situations with high uncertainty. The NRC notes that the uncertainty related to the extent and intensity of reasonably foreseeable activities generally increases with time into the future.

To determine typical activities that occur near at-reactor and away-from-reactor storage facilities, the NRC reviewed the cumulative impacts evaluations in NUREG–1437, *Generic Environmental Impact Statement for License Renewal of Nuclear Plants, Revision 1* (License Renewal GEIS) (NRC 2013a), site-specific EISs for new and operating reactors (e.g., NRC 2011a–e, 2012a, 2013b,c), and site-specific at-reactor and away-from-reactor ISFSI environmental assessments (EAs) or environmental impact statements (EISs) (e.g., NRC 2001a). The NRC also reviewed licensing documents for power reactors because at-reactor storage facilities are located at the reactor site, and therefore, at-reactor storage facilities are surrounded by the same activities as those identified in site-specific EISs for new reactors,

supplemental EISs for license renewal of operating reactors, and in the License Renewal GEIS for operating reactors. Table 6-1 describes the types of activities that the NRC identified.

The NRC also evaluated the reasonably foreseeable trend for each activity, primarily using projections prepared by Federal, State, and local agencies. In some cases, the NRC considered projections estimated by industry-based policy organizations, especially for activities with limited Federal, State, and local oversight. Trends in activities, facilities, or processes are based on projections as far into the future as reasonably foreseeable for the particular industry or activity. For many activities, the available projections cover shorter time periods, on the order of 25 to 40 years. The NRC qualitatively used these projections to estimate reasonable trends during continued storage. While the NRC considers this a reasonable approach based on the best available data, the NRC also notes that applying the trends beyond the time period specified for each activity introduces additional uncertainty. In addition, the NRC assumed that local, State, and Federal authorities would continue to have oversight over the construction and operation of many of the activities described in Table 6-1.

Table 6-1. General Trends and Human Activities Occurring at or near Storage Facilities

Activity or Stressor	Reasonably Foreseeable Future Trend
Increased Energy Demand	
Overall energy demand	Total energy use will increase by 10% from 2011 to 2040 (EIA 2012a). For at-reactor storage facilities, shutdown of the reactor will likely require replacement power, which may be built at the reactor site depending on spatial and water-use requirements, power needs, and the business plans of the operator (NRC 2013a).
Overall electricity consumption	Increased electricity consumption at an average annual rate of 0.9% (EIA 2012a).
New and continued construction and operation of gas-fired plants	About 0.8% annual increase from 2011 to 2040 (EIA 2012a).
New and continued construction and operation of coal-fired plants	About 0.1% annual increase from 2011 to 2040 (EIA 2012a).
New and continued construction and operation of nuclear plants	About 0.5% annual increase from 2011 to 2040 (EIA 2012a).
Continued operation of oil-fired plants	About 0.9% annual increase from 2011 to 2040 (EIA 2012a).
New and continued construction and operation of wind farms	About 2.8% annual increase from 2010 to 2035 (EIA 2012b).
New and continued construction and operation of conventional hydropower plants	About 0.8% annual increase from 2010 to 2035 (EIA 2012b).
New and continued construction and operation of solar plants	About 5.1% to 16.4% annual increase from 2010 to 2035 (EIA 2012b).

Table 6-1. General Trends and Human Activities Occurring at or near Storage Facilities (cont'd)

Activity or Stressor	Reasonably Foreseeable Future Trend
Construction and operation of transmission lines	About 29,000 additional circuit miles of high-voltage transmission capacity from 2011 to 2017 (EIA 2011).
New and continued construction and operation of pipelines	About 13,000 additional miles of natural gas pipelines and 19,000 additional miles of oil pipeline infrastructure through 2035 (INGAA 2011).
New and continued construction and operation of petroleum and liquefied natural gas facilities and terminals	Domestic production of liquefied natural gas is projected to increase from about 1.7% of the natural gas supply in 2010 to about 2.5% in 2035 (INGAA 2011; NPC 2011).
New and continued operation of oil refineries	Increase in oil refinery capacity from about 1.3 to 4.3 million barrels of oil per day from 2010 to 2030, depending on economic growth and price assumptions (EIA 2012c). Additional capacity will most likely be from expansions, updates, and modifications to existing refinery fleet, rather than construction of new facilities (NPC 2007).
New and continued oil and gas exploration and extraction activities	Domestic production of crude oil increases, mostly due to onshore production of shales and tight formations. Natural gas is expected to increase from 24% to 30% of electric power generation from 2011 to 2040 (EIA 2012a).
New and continued uranium ore exploration and extraction activities	New and continued uranium ore exploration and extraction activities expected based on the 0.5% annual increase from 2011 to 2040 for nuclear power generation.
Continued Use of Radiological Materials	
Construction and operation of new and existing at-reactor ISFSIs	Increase in total commercial spent fuel by about 2000 to 2400 MT/yr (NRC 2013d). About 9,500 dry storage systems would be loaded by 2050, with an additional 1,000 systems (10,500 total) loaded by 2075 (BRC 2012).
New and continued activities at hospitals and industrial facilities that produce and use radioactive materials, such as medical or industrial isotopes	Increase likely given the prevalence of nuclear medicine in current treatment technologies (112 million nuclear medicine/radiation therapy procedures annually [NRC 2000]), current demand (e.g., 78 FR 19537), and increasing population and aging demographics.
Continued operation of research and test reactors	As of June 2013, 31 NRC-licensed research reactors operate in the United States of which 17 have been granted a renewed license and 14 are currently under review for license renewal (NRC 2013e). Similar levels are expected in future.
Continued operation of fuel fabrication facilities	Slight decrease based on an estimate of 15.4 million separative work units in 2015 to 14.2 million separative work units in 2025 (EIA 2012d).

Table 6-1. General Trends and Human Activities Occurring at or near Storage Facilities (cont'd)

Activity or Stressor	Reasonably Foreseeable Future Trend
Increased Water Demand	
Continued transfer of water within and across water basins	Increase likely to establish reliable water supplies to support population growth (e.g., Texas Water Development Board 2012).
New and continued operation of drinking water-treatment plants and water-supply facilities	Total withdrawals of water for consumption to increase by about 50% from 2010 to 2040 (USACE 2006).
Population Growth and Demographic Shifts	
Overall Population Growth (in the U.S.)	Total U.S. population expected to increase from 321 million (2015) to 420 million (2060) (USCB 2012).
Increased Urbanization	
River, shoreline, canal, or channel modifications including dredging and erosion-prevention programs	Activities expected to continue based on statutory authority for U.S. Army Corps of Engineers (USACE), population growth, and urbanization.
Construction of housing units	An increase in total housing units is expected from 105.2 million units in 2010, to 143 to 153 million units in 2030, to 153 to 192 million units in 2050 (Pitkin and Myers 2008).
Construction of commercial buildings	Similar to housing construction, commercial construction would be expected to increase with population growth and continued urbanization.
Waterfront development	Coastal populations likely to increase, particularly in warmer coastal regions in the south based on population growth and housing trends.
Transportation	
Construction of transportation infrastructure (e.g., roads, bridges, and rail)	Additional infrastructure likely based on population growth. In addition, increased reliance on mass transit would reduce the need for new long-distance highway infrastructure (National Research Council 2009).
Other Activities and Stressors	
Continued agricultural activities, aquaculture activities, and commercial fishing	Agricultural and aquaculture production and commercial fishing would likely increase to provide food for an increasing national population (USDA 2012).
Continued industrial and manufacturing activities	Industrial and manufacturing activities (e.g., mines, quarries, glass manufacturing, chemical facilities—including organic chemical, inorganic chemical, and other miscellaneous chemical product and preparation manufacturing) would be anticipated to increase to provide goods and services for an increasing national population.

Table 6-1. General Trends and Human Activities Occurring at or near Storage Facilities (cont'd)

Activity or Stressor	Reasonably Foreseeable Future Trend
Continued resource management at State and Federal parks, preserves, wildlife management areas, national wildlife refuges, and recreational areas, or other private or public efforts to restore, preserve, or enhance natural communities	Government land management agencies will continue to operate and manage Federal and State properties in accordance with their statutory authority. Legislation in Congress or in State legislatures may revise (either expand or reduce) agency authority (e.g., NPSCC 2009).
Continued operation and closure of various military facilities	Military facilities will continue to support combat readiness and national security, but projections indicate that future overall military budgets will be reduced, accompanied by a reduction in active-duty strength (78 FR 21919).
Climate change	Increased temperature, sea-level rise, and changes in precipitation levels as described in the U.S. Global Climate Research Project (GCRP) (2014). Depending on the assumed scenario, global temperatures in 2100 are predicted to increase by 1.7°C (most aggressive carbon emissions control) to 5.5°C (least aggressive carbon emissions control). Sea level is predicted to increase 0.305 to 1.22 m by 2100. Reduced snowpack in western mountains is predicted (USACE 2006).

6.3.2 Other NRC-Regulated or Spent Fuel-Related Activities during Continued Storage

In addition to the incremental impacts from continued storage described in Chapters 4 and 5, other NRC-regulated or spent fuel-related activities could affect the same resources as those affected by continued storage. These activities include other NRC-regulated actions that would occur at the storage site or connected actions that could occur at or beyond the storage site. A summary of these activities considered in this cumulative analysis is provided below. Note that some of the activities apply only to a subset of the timeframes described in Chapters 4 and 5. For example, dry transfer system (DTS) construction and decommissioning would occur only during long-term storage or indefinite storage, but would not occur during short-term storage.

6.3.2.1 Final Reactor Shutdown Activities Prior to Decommissioning

These activities could involve an initial increase in staff to execute shutdown: a decrease and ultimately; a cessation of reactor power output to grid; an increase in power demand to support onsite activities; a decrease in demand for power plant operational cooling; and the potential for removal of some structures and equipment.

Also see the description of shutdown activities in Section 2.2.

6.3.2.2 Decommissioning of the Reactor Power Block (including the spent fuel pool), DTS, and ISFSI

Decommissioning includes activities to remove radioactive materials from structures, systems, and components to demonstrate compliance with NRC release limits in 10 CFR Part 20, Subpart E. Reactor decommissioning of facilities not related to spent fuel storage could occur from the time that the licensee certifies that it has permanently ceased power operations until the license is terminated. To facilitate decommissioning at some sites, the operator may construct a new spent fuel pool cooling system to allow the spent fuel pool to be isolated from other reactor plant systems.

Decommissioning of the spent fuel pool could begin after stored spent fuel has been transferred to dry storage. The NRC generically evaluated the environmental impacts from reactor decommissioning including the spent fuel pool (but not ISFSIs) in NUREG−0586, *Final Generic Environmental Impact Statement on Decommissioning of Nuclear Facilities, Supplement 1* (Decommissioning GEIS) (NRC 2002). The NRC previously evaluated the environmental impacts of decommissioning an away-from-reactor ISFSI in NUREG−1714, *Final Environmental Impact Statement for the Construction and Operation of an Independent Spent Fuel Storage Installation on the Reservation of the Skull Valley Band of Goshute Indians and the Related Transportation Facility in Tooele County, Utah* (PFSF EIS) (NRC 2001a) and in site-specific at-reactor ISFSIs in the Calvert Cliffs, Humboldt Bay, H.B. Robinson, Surry, Oconee, and Diablo Canyon EAs (NRC 2003, 2005a–c, 2009, 2012b). Decommissioning of the DTS is only applicable for long-term and indefinite storage. Also see the description of decommissioning activities in Section 2.2.

6.3.2.3 Activities to Prepare the Spent Fuel for Transportation to a Repository for Final Disposal

These activities would include transferring spent fuel that was stored in dual-purpose canisters from the storage casks to transportation packages and then loading the transportation packages on conveyances before transportation to a repository. Spent fuel stored in storage-only casks or that would otherwise require bare fuel handling (as described in Chapter 2) would be transferred to transportation-certified packages using the spent fuel pool for short-term storage and the DTS long-term storage timeframe. These transportation-related activities could begin when a repository begins accepting shipments of spent fuel from power reactors. This activity would only occur for short-term and long-term storage, because indefinite storage assumes that a repository is never built.

6.3.2.4 Transportation of Spent Fuel from an At-Reactor or Away-From-Reactor Storage Facility to a Repository for Disposal

As described in Section 1.1, the Federal government has adopted deep geologic disposal as the national solution for spent fuel disposal (Nuclear Waste Policy Act of 1982) and the U.S. Department of Energy (DOE) has reaffirmed the Federal government's commitment to the ultimate disposal of spent fuel (DOE 2013). When a repository is available to accept shipments of spent fuel, facility operators would ship spent fuel in NRC-approved transportation packages from facility locations across the United States to a repository site. Shipments would be required to comply with applicable NRC and U.S. Department of Transportation regulations for the transportation of radioactive materials in 10 CFR Part 71 and 49 CFR Parts 171 through 180. Transportation of spent fuel to a repository would only occur during short-term and long-term storage because indefinite storage assumes a repository is never built.

6.4 Resource-Specific Analyses

6.4.1 Land Use

This section evaluates the effects of continued storage on land use when added to the aggregate effects of other past, present, and reasonably foreseeable future actions. As described in Sections 4.1 and 5.1, the incremental impacts from continued storage on land use would be SMALL for all timeframes at both at-reactor and away-from-reactor storage facilities.

The geographic area considered in the cumulative land use analysis includes all affected land surrounding the at-reactor and away-from-reactor storage facilities. Residential, commercial, industrial, agricultural, forested, and recreational lands typically surround spent fuel storage facilities. Depending on the site, the land surrounding a spent fuel storage facility could include private and public lands in a range of political jurisdictions including towns, townships, service districts, counties, and parishes. In addition, State, Federal, and Native American lands are present within the area considered for this analysis.

6.4.1.1 Potential Cumulative Impacts from General Trends and Activities

Cumulative impacts on land use include (1) changing and disturbing existing land-use conditions, (2) restricting access or establishing right-of-way access, (3) restricting agricultural or recreational activities, and (4) altering ecological or historic and cultural resources (e.g., NRC 2011a–e, 2012a, 2013a–c). Cumulative impacts could occur from the activities described in Section 6.3.1, such as constructing and operating new and existing energy projects and infrastructure (e.g., replacement power), water development projects, and constructing housing units, commercial buildings, roads, bridges, and rail lines (e.g., NRC 2011a–e, 2012a,

2013a–c). In addition, climate change can affect agricultural and ranching land uses because of changes in crop yields and livestock productivity (GCRP 2014). Climate change can also lead to higher sea levels (GCRP 2014), thereby changing land use through inundation and loss of coastal wetlands and other low-lying areas.

The magnitude of cumulative land-use impacts resulting from general trends taking place near a storage facility would depend on current land-use patterns and proposed land-use changes, the number (and density) of actions, and the extent to which these actions (facilities or projects) employ mitigation measures to reduce impacts. The cumulative impacts from general trends and activities would range from minimal (e.g., minor changes in land use from limited development in the area, see NRC 2011d) to noticeable (e.g., construction and operation of a new coal-fired power plant, new transmission lines, and climate change in the area, see NRC 2011a). Growth control measures, such as zoning restrictions and implementation of local land use or master plans, are expected to limit development near a storage facility. Therefore, the cumulative impacts are not expected to be destabilizing (e.g., major changes in land use from uncontrolled development in the area).

6.4.1.2 Potential Cumulative Impacts from Other NRC-Regulated or Spent Fuel-Related Activities

Cumulative impacts on land-use conditions could result from other NRC-regulated or spent fuel-related activities, such as decommissioning of the reactor power block (including the spent fuel pool), ISFSIs, and DTS.

Activities associated with decommissioning of the reactor power block (including the spent fuel pool) that could impact land use include (1) addition and expansion of staging and laydown areas for equipment, (2) construction of temporary buildings and parking areas, (3) removal of large reactor components, (4) structure dismantlement, and (5) low-level waste (LLW) storage and packaging (NRC 2002). To facilitate decommissioning at some sites, the operator may construct a new spent fuel pool cooling system to allow the spent fuel pool to be isolated from other reactor plant systems in order. In the Decommissioning GEIS for power reactors, the NRC (2002) determined that changes to land use from these activities would be temporary and would not be detectable. Most reactor sites have sufficient area for these activities within the previously disturbed area (whether during construction or operation of the site); therefore, no additional land disturbance would be anticipated. The impacts from decommissioning spent fuel pools were considered in the Decommissioning GEIS. Given that the impacts from decommissioning reactors and spent fuel pools would be similar to that described in the Decommissioning GEIS for reactors, impacts on onsite land use during decommissioning are expected to be minimal.

Activities associated with decommissioning ISFSIs that could impact land use include (1) decontaminating the concrete storage casks; (2) dismantling and removing the concrete

storage casks, concrete pads, and support facilities, including the DTS; and (3) removing any contaminated soil identified during the final radiological site survey. In most cases, land disturbance impacts associated with decommissioning ISFSIs would be similar to or less than land disturbance impacts associated with constructing ISFSIs (NRC 2003, 2005a–c, 2009, 2012b). After decommissioning activities are complete, the area previously occupied by the at-reactor or away-from-reactor ISFSI would typically be covered with topsoil, contoured, and replanted with native vegetation (NRC 2005c). The goal of decommissioning is to release the site for unrestricted use. Because the land disturbance impacts from decommissioning at-reactor and away-from-reactor ISFSIs would be similar to or less than those associated with constructing ISFSIs, impacts on land use during decommissioning are expected to be minimal.

6.4.1.3 Conclusion

Cumulative impacts on land use include the incremental effects from continued storage when added to the aggregate effects of other past, present, and reasonably foreseeable future actions. As described in Sections 4.1 and 5.1, the incremental impacts from continued storage on land use is SMALL for all timeframes at both at-reactor and away-from-reactor storage facilities. In addition, past, present, and reasonably foreseeable activities take place in the geographic area of interest that could contribute to cumulative effects on land use. The cumulative impacts on land use from continued storage when added to other past, present, and reasonably foreseeable Federal and non-Federal activities are SMALL to MODERATE depending on land-use patterns and activities surrounding the site. A SMALL impact would occur if no other actions occur that have overlapping, noticeable effects on land use. A MODERATE impact would occur if NRC or other Federal or non-Federal actions, such as construction and operation of other nearby nuclear, coal-fired, or gas-fired power plants or future urbanization, have overlapping impacts with the continued storage of waste that noticeably altered land use. At storage facilities where the cumulative impacts would be MODERATE from other Federal or non-Federal activities, the NRC determined the cumulative impacts would likely remain MODERATE whether or not continued storage occurred because the incremental impacts from continued storage would be minor, especially in comparison to other general trends, such as urbanization.

6.4.2 Socioeconomics

This section evaluates the socioeconomic effects of continued storage when added to the aggregate effects of other past, present, and reasonably foreseeable future actions. As described in Sections 4.2 and 5.2, the adverse effects of continued storage are SMALL for all at-reactor and away-from-reactor spent fuel storage facilities because of the small number of workers required to maintain and monitor the storage of spent fuel. In addition, construction and operation of an away-from-reactor storage facility could generate potentially LARGE beneficial economic impacts in some rural communities as well as SMALL adverse socioeconomic impacts due to increased demand for housing and public services.

The geographic area considered in the cumulative socioeconomic resources analysis is the socioeconomic region of influence, which includes the areas where spent fuel storage workers and their families reside, spend their income, and use their benefits. Thus, in these areas, storage facility workers both directly and indirectly affect the economic conditions of the region.

6.4.2.1 Potential Cumulative Impacts from General Trends and Activities

Cumulative socioeconomic impacts in local communities could affect (1) employment and income, (2) tax revenues, (3) population and housing demand, and (4) the availability and demand for public services (NRC 2008, 2011d, 2012a, 2013a). New energy projects (e.g., replacement power); industrial, commercial, and agricultural development; and regional tourism and recreation, could cause an increase in population, demand for housing and services, traffic volume, and tax revenue paid to local jurisdictions. In addition, an at-reactor ISFSI located at or near an operating reactor would experience cumulative impacts associated with reactor operations, such as traffic and tax revenue.

The magnitude of the socioeconomic impact resulting from general trends within close proximity of a spent fuel storage facility would depend on the intensity of development. Cumulative impacts would be specific to the region in which the storage facility is located and would range from minimal (e.g., minor increase in demand for public services caused by construction and operation of a new industry or power plant, see NRC 2011d) to noticeable (e.g., noticeable increase in housing and rental prices because of increased demand caused by the construction and operation of a new industry or power plant, see NRC 2008). In most situations, the cumulative impacts could be both adverse and beneficial (e.g., increased traffic, demand for public services, and increased property tax revenue, see NRC 2012a).

6.4.2.2 Potential Cumulative Impacts from Other NRC-Regulated or Spent Fuel-Related Activities

Cumulative impacts could result from other NRC-regulated or spent fuel-related activities, such as decommissioning the power block (including the spent fuel pool), ISFSI, and DTS. The extent to which impacts would be cumulative would depend on the timing of decommissioning in relation to other activities (e.g., termination of reactor operations and power plant shutdown).

The immediate socioeconomic impact caused by terminating reactor operations and power plant shutdown would be greater than the impact from decommissioning the power block. The socioeconomic impacts from terminating reactor operations and power plant shutdown are described in both the Decommissioning GEIS (NRC 2002) and the License Renewal GEIS (NRC 2013a), as described below.

As discussed in Section 3.2, the size of the nuclear power plant operations workforce varies considerably among operating U.S. nuclear power facilities and ranges from 600 to

2,400 workers. Operating nuclear power plants generally provide a significant amount of tax revenue to local communities and public school districts. Impacts associated with power plant shutdown include the loss of jobs at the nuclear plant and in surrounding communities; and a corresponding reduction in tax payments, demand for housing and public services, and traffic volume. As stated in Section 3.2, property tax payments would continue as long as spent fuel is stored onsite. Publicly owned tax-exempt nuclear power plants, fully depreciated plants, or plants located in urban or an urbanizing area with a large or growing tax base would not experience many changes in overall socioeconomic conditions (NRC 2002). In rare circumstances in which a large nuclear power plant located in a rural area permanently ceases operations early and delays decommissioning, the affected area could experience greater impacts (NRC 2002). Impacts from the loss or reduction of tax revenue because of the termination of reactor operations and power plant shutdown on community services could range from SMALL to LARGE (NRC 2013a). Considering all variables, such as plant size and community size as equivalent, plants that begin decommissioning immediately would have less immediate negative impacts because the workforce reduction would occur gradually (NRC 2002).

Impacts associated with decommissioning a power block (including the spent fuel pool) are described in the Decommissioning GEIS (NRC 2002). While there would be an overall reduction in the number of workers at the nuclear plant during decommissioning, the size of the workforce would have already been substantially reduced after the termination of reactor operations and power plant shutdown. The Decommissioning GEIS estimated that between 100 and 200 workers would be needed to support decommissioning (NRC 2002). The socioeconomic impact from decommissioning the power block and spent fuel pool would depend on the size and location of the facility and would eventually result in the loss of jobs upon completion, including reduced housing demand, tax revenues, and demand for public services. However, the NRC concluded that the overall socioeconomic impact from decommissioning the power block would be SMALL due to the gradual reduction in the workforce and purchasing activities at the power plant site (NRC 2002).

Because of the smaller workforce involved, the socioeconomic impact from decommissioning any ISFSI and associated DTS would be less than experienced from the decommissioning the power block. Decommissioning activities would commence after spent fuel has been transported offsite to either a repository or an away-from-reactor storage facility. Funding plans for decommissioning ISFSIs (MYAPC 2013; CYAPC 2012; YAEC 2012) estimate that approximately 50 workers would be needed to decommission the storage facility over a 1- to 1.5-year period. Decommissioning the DTS could occur in parallel with decommissioning the ISFSI and would represent a minor increase to the workforce. Based on DOE's Topical Safety Analysis Report (DOE 1996), it was estimated that a 5-person workforce could decommission the DTS within 60 days. Workforce numbers and duration of decommissioning activities would vary from site to site. A review of NRC EAs and EISs for construction, operation, and renewal

of site specifically licensed at-reactor and away-from-reactor ISFSIs (NRC 2001a, 2003, 2005a–c, 2009, 2012b) did not identify any significant socioeconomic impacts during decommissioning of ISFSIs. The magnitude of impacts from decommissioning an ISFSI at other sites would be similar to that described in the Calvert Cliffs, Humboldt Bay, H.B. Robinson, Surry, Oconee, and Diablo Canyon EAs and the PFSF EIS because of considerations of workforce, housing demand, traffic networks, and public services. Because the impacts from decommissioning at-reactor and away-from reactor ISFSIs would be similar to that described in site-specific ISFSI EAs and the PFSF EIS, socioeconomic impacts during decommissioning are expected to be minimal.

6.4.2.3 Conclusion

Cumulative impacts include the incremental effects from continued storage when added to the aggregate effects of other past, present, and reasonably foreseeable future actions. As described in Sections 4.2 and 5.2, the adverse effects of continued storage are SMALL for at-reactor and away-from-reactor storage facilities because of the small number of workers required to maintain and monitor the storage of spent fuel. However, construction and operation of an away-from-reactor storage facility could generate potentially LARGE beneficial economic impacts in some rural economies as well as SMALL adverse socioeconomic impacts due to increased demand for housing and public services. In addition, other past, present, and reasonably foreseeable activities could also contribute to cumulative socioeconomic impacts. The cumulative socioeconomic impacts from continued storage when added to other past, present, and reasonably foreseeable Federal and non-Federal activities, such as the termination of reactor operations, decommissioning, construction of replacement power projects, urbanization, and transportation projects, are SMALL to LARGE depending on the activity and location of the action relative to the storage facility. A SMALL impact would occur if there are no other actions that have overlapping, noticeable socioeconomic effects. A MODERATE impact would occur if other Federal or non-Federal actions, such as construction and operation of a new power plant, have overlapping impacts with continued storage that would noticeably alter socioeconomic conditions (e.g., increased traffic and tax revenues). LARGE impacts are unlikely because local planning and zoning authorities would ensure that new projects do not destabilize socioeconomic conditions. At storage facilities for which the adverse cumulative impacts would range from MODERATE to LARGE because of other Federal and non-Federal activities, the adverse cumulative impacts would be MODERATE to LARGE regardless of continued storage because the incremental operational effects from continued storage would be minor when compared to other activities and economic trends, such as urbanization or construction and operation of new industries and power plants.

6.4.3 Environmental Justice

This section describes the impacts on minority and low-income populations resulting from continued storage when added to the aggregate effects of other past, present, and reasonably

foreseeable future actions. As described in Sections 4.3 and 5.3, minority and low-income populations are not expected to experience disproportionately high and adverse human health and environmental effects from the incremental impacts associated with continued storage.

The environmental justice cumulative impact analysis assesses the potential for minority and low-income populations to experience disproportionately high and adverse human health and environmental effects from the continued storage of spent fuel combined with past, present, and reasonably foreseeable future actions. Adverse health effects are measured in terms of the risk and rate of fatal or nonfatal adverse impacts on human health. An adverse environmental impact is an impact that is determined to be both harmful and significant (as employed by NEPA).

Disproportionately high and adverse human health effects occur when the risk or rate of exposure to an environmental hazard for a minority or low-income population is significant and exceeds the risk or exposure rate for the general population or for another appropriate comparison group. Disproportionately high environmental effects refer to impacts, or risk of impacts, on the natural or physical environment in a minority or low-income community that are significant and appreciably exceed the environmental impact on the larger community. Such effects may include biological, cultural, economic, or social impacts (NRC 2013a).

Additionally, the cumulative impact assessment considers the potential radiological risk to minority and low-income population groups residing within the 80 km (50 mi) region from the spent fuel storage facility as well as the potential exposure from other sources of radiation from other actions. As stated in Section 3.3, special population groups include populations that rely principally on fish or wildlife for subsistence.

6.4.3.1 Potential Cumulative Impacts from General Trends and Activities

Potentially adverse human health and environmental effects from activities associated with industrial, commercial, agricultural, and transportation developments can affect the resources on which minority and low-income populations depend (e.g., fish, game animals, and native vegetation) (NRC 2013a). For example, potential impacts on minority and low-income populations from the construction and operation of replacement power and other industrial projects in the vicinity of storage facilities would mostly consist of environmental (e.g., noise, dust, and traffic) and socioeconomic (e.g., employment and housing) effects during construction. Noise and dust impacts during construction would be of short duration and primarily limited to onsite activities. Minority and low-income populations residing along site access roads could be directly affected by increased commuter vehicle and truck traffic. However, these effects could be limited to certain hours of the day. Increased demand for rental housing during construction could cause rental costs to temporarily rise, disproportionately affecting low-income populations living near the site that rely on inexpensive housing. However, given the proximity of most industrial sites to urban areas, many workers could commute to the construction site, thereby reducing the need for rental housing.

The magnitude of human health and environmental effects resulting from all actions associated with general trends on minority and low-income populations living within close proximity of a spent fuel storage facility would depend on the intensity of the effects. Some of these potential effects have been identified in resource areas presented in Chapters 4 and 5 of this GEIS. Minority and low-income populations are subsets of the general population residing in the area and all would be exposed to the same hazards generated from activities associated with continued storage.

6.4.3.2 Potential Cumulative Impacts from Other NRC-Regulated or Spent Fuel-Related Activities

Cumulative impacts could result from other NRC-regulated or spent fuel-related activities, such as terminating reactor operations, shutting down the power plant, decommissioning the reactor power block (including the spent fuel pool) and ISFSIs, and constructing and operating the DTS. The NRC also considers the potential for minority and low-income populations to experience disproportionately high and adverse human health effects and (1) whether the health effects would be significant, at or above generally accepted norms; (2) whether the risk or rate of environmental hazard exposure would be significant, exceed, or likely exceed the risk or rate to an appropriate comparison group (e.g., the general population); and (3) whether health effects would occur in a minority or low-income population already affected by cumulative or multiple adverse exposures from environmental hazards (NRC 2002).

The impacts associated with plant shutdown are described in both the Decommissioning GEIS (NRC 2002) and the License Renewal GEIS (NRC 2013a). Plant shutdown and the resulting loss of jobs, income, and tax revenue could have a disproportionate effect on minority and low-income populations (NRC 2013a). The loss of tax revenue, for example, could reduce the availability or eliminate some of the community services on which low-income and minority populations may depend (NRC 2013a).

Environmental impacts associated with decommissioning activities at a nuclear power plant site and the extent to which minority and low-income populations could be affected are discussed in the Decommissioning GEIS (NRC 2002). Decommissioning the power block and spent fuel pool would eventually result in the loss of jobs upon completion. Other impacts would include reduced housing demand, tax revenues, and the availability and demand for public services (NRC 2002). Decommissioning activities could affect air and water quality in the area around each nuclear plant site, which could cause health and other environmental impacts in minority and low-income populations that might be present in the area (NRC 2002). Population groups with particular resource dependencies or practices (e.g., subsistence agriculture, hunting, and fishing) could also be disproportionately affected (NRC 2002). In addition, the impacts associated with eventual decommissioning would be considered when a licensee submits its post-shutdown decommissioning activities report for review under 10 CFR 50.82(a)(4) or

10 CFR 52.110(d)(1) and its license termination plan for review and approval per 10 CFR 50.82(a)(9) or 10 CFR 52.110(i).

Because a smaller workforce would be needed, impacts from decommissioning an at-reactor ISFSI are anticipated to be less than impacts resulting from decommissioning the reactor power block. As discussed in Section 6.4.2, approximately 50 workers would be needed to decommission an at-reactor ISFSI over a 1- to 1.5-year period. Decommissioning of the DTS could occur in parallel and would represent a minor increase to the workforce. Workforce numbers and duration of decommissioning activities would vary from site to site. For away-from-reactor ISFSIs, the impacts of decommissioning would be similar to those associated with decommissioning the power block because the number of workers required to decommission both facilities are similar (NRC 2001b, 2002).

6.4.3.3 Conclusion

Cumulative impacts on minority and low-income populations include the incremental effects from continued storage when added to the aggregate effects of other past, present, and reasonably foreseeable future actions. As discussed in Section 4.3 and 5.3 of this GEIS, minority and low-income populations are not expected to experience disproportionately high and adverse effects from the incremental impacts associated with the continued storage of spent fuel. In addition, the NRC determined that disproportionately high and adverse human health effects are not expected in special pathway receptor populations in the region as a result of subsistence consumption of water, local food, fish, and wildlife. Similarly, there would be no contributory effects to human health beyond what is currently being experienced for the duration that spent fuel remains onsite. Potential effects occurring from other reasonably foreseeable offsite projects would be considered during NRC site-specific licensing reviews (e.g., construction of an away-from-reactor ISFSI, replacement of ISFSI and construction, operation, and replacement of a DTS). In addition, as indicated in the Commission's policy statement, environmental justice impacts would be considered during site-specific environmental reviews for specific NRC licensing actions (69 FR 52040).

6.4.4 Air Quality

This section evaluates the effects of continued storage on air quality resources when added to the aggregate effects of other past, present, and reasonably foreseeable future actions. As described in Sections 4.4 and 5.4, the incremental impacts from continued storage on air quality is SMALL for all timeframes at both at-reactor and away-from-reactor storage facilities, except during short-term storage at away-from-reactor ISFSIs where the impacts would range from SMALL to MODERATE because construction of a rail spur could result in noticeable impacts on air quality.

The geographic area considered in the cumulative air quality analysis includes the air quality control region in which an at-reactor or away-from-reactor storage facility is located. This area could include one or more counties that comprise the air quality control region surrounding the site, as described in Section 3.4.

6.4.4.1 Potential Cumulative Impacts from General Trends and Activities

Cumulative impacts on air quality could include degradation of air quality in air quality control regions that are already in or near nonattainment or maintenance for one or more national ambient air quality standards. For at-reactor and away-from-reactor storage facilities, cumulative impacts could occur due to multiple activities that affect the air quality control region near the storage facility (e.g., electric power generation; ground, water, and air transportation; and nearby heavy industries) associated with urbanization and industrial, commercial, agricultural, and transportation development (e.g., NRC 2011a–e, 2012a, 2013a–c). In addition, climate change can impact air quality because of higher or lower ambient air temperatures and changes in precipitation rates (GCRP 2014). For air resources near at-reactor storage facilities, additional cumulative impacts may include the following: (1) cumulative impacts due to the various impacts from an individual power plant over time (e.g., employee vehicles and emergency diesel generator testing) and (2) cumulative impacts due to closely sited power plants (e.g., air pollutant emissions from nearby coal-fired power plants) (NRC 2013a).

The magnitude of cumulative impacts resulting from all general trends within the air quality control region in which a storage facility is located would depend on the nature and location of the actions, the number (and density) of actions, and the extent to which these actions (facilities or projects) employ mitigation measures to minimize such impacts. The cumulative impacts from general trends and activities would range from minimal (e.g., minor air emissions associated with localized development in the area, see NRC 2013c) to noticeable (e.g., emissions from the construction and operation of a nearby coal-fired plant, see NRC 2011a).

6.4.4.2 Potential Cumulative Impacts from Other NRC-Regulated or Spent Fuel-Related Activities

Cumulative impacts on air quality resources could result from other NRC-regulated or spent fuel-related activities, such as (1) decommissioning of the reactor power block (including the spent fuel pool), ISFSIs, and DTS; (2) loading of packages for transportation to a repository; and (3) long-range transport of spent fuel to a repository.

Reactor power block decommissioning activities involve the use of large diesel-powered equipment for equipment removal, demolition of structures, worker transportation to and from the site, and transportation of demolition debris to waste disposal facilities. In most cases, air quality effects would be relatively minor and short term in duration. Air quality control measures, which may be required to comply with air quality permits, would also minimize air quality impacts. The Decommissioning GEIS (NRC 2002) analyzed the air quality impacts for decommissioning a

reactor, including the spent fuel pools. In the Decommissioning GEIS for power reactors (including spent fuel pools), the NRC determined that there would be minimal impact on air quality and concluded that the impacts of decommissioning on air quality are not detectable (NRC 2002). The NRC's EAs for the Calvert Cliffs and Diablo Canyon at-reactor ISFSIs and the PFSF away-from-reactor ISFSI EIS did not identify any significant impacts on air quality resources during decommissioning of the ISFSI (NRC 2001a, 2003, 2012a). The NRC assumes that the types and magnitude of impacts described in the Calvert Cliffs and Diablo Canyon EAs and the PFSF EIS are representative of impacts from decommissioning an at-reactor or away-from-reactor ISFSI at other sites because these facilities are typical sizes of at-reactor and away-from-reactor ISFSIs and considered typical decommissioning methods. Given that the impacts from decommissioning reactors, spent fuel pools, and ISFSIs would be similar to that described in the Decommissioning GEIS for reactors and site-specific ISFSI EAs and the PFSF EIS, impacts on air quality resources from decommissioning are expected to be minimal.

Because the same transporters, trucks, and other fossil-fuel-powered equipment are used to transfer dual-purpose canisters from transportation packages to storage casks as are used to transfer them from storage casks to transportation packages, the loading of packages for transportation to a repository would have similar air emission sources, levels, and impact magnitude as the receiving of spent fuel at an away-from-reactor facility from at-reactor locations. As described in Section 5.4.1, the NRC concluded that the operation of an away-from-reactor ISFSI, including the activity of loading casks, would be SMALL. Therefore the impact magnitude for the loading of packages for transportation to a repository would be similar.

Disposal of spent fuel requires the long-range transportation from the storage site to a repository. The at-reactor storage operation examines the impacts of a facility with a 1,600-MTU capacity whereas the away-from-reactor operation examines the impacts of a facility with a 40,000-MTU capacity. The *Final Supplemental Environmental Impact Statement for a Geologic Repository for the Disposal of Spent Nuclear Fuel and High-Level Radioactive Waste at Yucca Mountain, Nye County, Nevada* (Yucca Mountain EIS) (DOE 2008) assesses the air quality impacts for the transportation of 70,000 MTU of spent fuel within Nevada. The Yucca Mountain EIS concluded that the emissions from spent fuel transportation during operations would be distributed over the entire length of the route, and no air quality standards would be exceeded. Because the amount of spent fuel considered in the transportation analyses in this GEIS is less than the amount considered in the Yucca Mountain analyses, the NRC concludes that the transportation of spent fuel to a repository would not be greater than the impact magnitude documented in the Yucca Mountain EIS.

6.4.4.3 Conclusion

Cumulative impacts on air quality include the incremental effects from continued storage when added to the aggregate effects of other past, present, and reasonably foreseeable future actions. As described in Sections 4.4 and 5.4, the incremental impacts from continued storage

on air quality are SMALL for all timeframes for both at-reactor and away-from-reactor storage facilities, except during short-term storage at away-from-reactor ISFSIs where the impacts would range from SMALL to MODERATE. In addition, past, present, and reasonably foreseeable activities take place in the geographic area of interest that could contribute to cumulative effects to air quality resources. The cumulative impacts from continued storage when added to other past, present, and reasonably foreseeable Federal and non-Federal activities, such as urbanization, energy development, or other industrial or commercial activities, are SMALL to MODERATE. A SMALL impact would occur at sites where storage facilities have minimal impacts on air quality and no other actions occur that had overlapping, noticeable effects on air quality. A MODERATE impact would occur if other actions occur that did have overlapping and noticeable effects on air quality, such as a nearby fossil-fuel-fired electricity generating station. At storage facilities where the incremental impacts would be SMALL and the cumulative impacts would be MODERATE from other Federal or non-Federal activities, the NRC determined the cumulative impacts would likely remain MODERATE whether or not continued storage occurred because the incremental impacts from continued storage would be minor, especially in comparison to other general trends, such as operation of fossil-fuel-fired power plant.

6.4.5 Climate Change

Continued storage activities involve the emission of greenhouse gases, primarily carbon dioxide (CO_2). The quantities of greenhouse gas emissions are often described in terms of a CO_2 footprint expressed as metric tons of CO_2 equivalent. As described in Sections 4.5 and 5.5, the incremental impacts from continued storage on climate change, in terms of emissions of greenhouse gases (GHGs), are SMALL for all timeframes at both at-reactor and away-from-reactor storage facilities. The geographic area considered in the cumulative climate change analysis is worldwide.

6.4.5.1 Potential Cumulative Impacts from General Trends and Activities and from Other NRC-Regulated or Spent Fuel-Related Activities

The magnitude of cumulative impacts resulting from all general trends taking place within the region in which a storage facility is located must be placed in geographic context for the following reasons:

- The environmental impact is global rather than local or regional.
- The effect is not particularly sensitive to location of the release point.
- The magnitudes of individual GHG sources related to human activity, no matter how large compared to other sources, are small when compared to the total mass of GHGs in the atmosphere.
- The total number and variety of GHG sources is extremely large and the sources are ubiquitous.

These points are illustrated by the following comparison of annual CO_2 emission rates (Table 6-2).

Table 6-2. Comparison of Annual Carbon Dioxide Emission Rates

Source	MT/yr[(a)]
Global emissions from fossil-fuel combustion (2010)[(b)]	31,780,000,000
U.S. emissions from fossil-fuel combustion (2011)[(c)]	5,277,200,000
1,000-MW(e) nuclear power plant (including fuel cycle, 80 percent capacity factor)[(d)]	260,000
1,000-MW(e) nuclear power plant (during SAFSTOR)[(d)]	925
Average U.S. home[(e)]	19
Average U.S. passenger vehicle[(e)]	5

Source: (EPA 2013a, b; NRC 2013f); expressed in metric tons per year of CO_2.
(a) Nuclear power emissions estimates are in units of metric tons of CO_2-equivalent whereas the other energy alternatives emissions estimates are in units of metric tons of CO_2. If nuclear power emissions were represented in metric tons of CO_2, the value would be slightly less, as other GHG emissions would not be included.
(b) (EPA 2013a), Chapter 3; expressed in metric tons per year of CO_2.
(c) (EPA 2013a), Table 3-1; expressed in metric tons per year of CO_2.
(d) (NRC 2013f); expressed in metric tons per year of CO_2-equivalent.
(e) (EPA 2013b); expressed in metric tons per year of CO_2.

Evaluation of cumulative impacts of GHG emissions requires the use of a global climate model. The GCRP report (GCRP 2014) provides a synthesis of the results of numerous climate modeling studies. In addition, the CEQ issued draft guidance that recommends synthesis reports and peer-reviewed assessments from the GCRP as sources of the best scientific information available on reasonably foreseeable climate change impacts (CEQ 2010). The NRC concludes that the cumulative impacts of GHG emissions around the world as presented in the GCRP report are the appropriate basis for its evaluation of cumulative impacts. Based primarily on the scientific assessments of the GCRP and National Research Council, the EPA Administrator issued a determination in 2009 (74 FR 66496) that GHGs in the atmosphere may reasonably be anticipated to endanger public health and welfare, based on observed and projected effects of GHGs, their impact on climate change, and the public health and welfare risks and impacts associated with such climate change. Based on the impacts set forth in the GCRP report, and the CO_2 emissions criteria in the final EPA "Prevention of Significant Deterioration and Title V Greenhouse Gas Tailoring Rule" (75 FR 31514), the NRC concludes that the national and worldwide cumulative impacts of GHG emissions are noticeable but not destabilizing. The review team bases this conclusion that the environment may be noticeably affected by GHG emissions but not destabilized on the tailored approach to addressing CO_2 emissions in the EPA rule and the EPA Administrator's determination, neither of which call for immediate action such as closure of GHG-emitting facilities. Therefore, national and worldwide cumulative impacts of GHG emissions reflect conditions that are noticeable but not destabilizing. The NRC further concludes that the cumulative impacts would be noticeable but not destabilizing, with or without the GHG emissions from continued storage.

6.4.5.2 Conclusion

Cumulative impacts include the incremental effects from continued storage when added to the aggregate effects of other past, present, and reasonably foreseeable future actions. As described in Sections 4.5 and 5.5, the incremental impacts from continued storage on climate change is SMALL for all timeframes at both at-reactor and away-from-reactor storage facilities. In addition, past, present, and reasonably foreseeable activities take place worldwide that could contribute to climate change. The cumulative impacts from continued storage when added to other past, present, and reasonably foreseeable Federal and non-Federal activities, such as operation of fossil-fuel-fired power plants, would be MODERATE.

At storage facilities where the cumulative impacts would be MODERATE from other Federal or non-Federal activities, the NRC determined the cumulative impacts would likely remain MODERATE whether or not continued storage occurred because the incremental impacts from continued storage would be minor, especially in comparison to other GHG emitters, such as operation of fossil-fuel-fired power plant.

6.4.6 Geology and Soils

This section evaluates the effects of continued storage on geology and soils when added to the aggregate effects of other past, present, and reasonably foreseeable future actions. As described in Sections 4.6 and 5.6, the incremental impacts from continued storage on geology and soils is SMALL for all timeframes at both at-reactor and away-from-reactor storage facilities.

The geographic area considered in this cumulative analysis with regard to soils is the area within the site boundaries, and for geology is the area in the immediate vicinity of the at-reactor or away-from-reactor storage facility. Depending on the site, the area could include rural and semi-urban regions and the associated environmental conditions.

6.4.6.1 Potential Cumulative Impacts from General Trends and Activities

Cumulative impacts on the geology and soils of an area include (1) access to mineral or energy resources, (2) destruction of unique geologic features, (3) soil loss and increased erosion potential induced by construction activities, (4) soil compaction and changes to surface drainage as a result of utilities and structures, and (5) potential soil contamination (both radiological and nonradiological) through inadvertent spills during normal operations (e.g., NRC 2011a–e, 2012a, 2013a–c). These impacts typically result from land-disturbing activities, including earthmoving, grading, and excavation from constructing, operating, and decommissioning new and existing energy producing plant facilities and associated infrastructures. Land usage in the vicinity of a storage facility may also affect the access to mineral or energy resources.

Cumulative Impacts

The magnitude of geology and soils cumulative impacts resulting from general trends taking place within the region in which a storage facility is located would depend on current land utilization patterns, any proposed land-use changes, the density of impacting activities, and the extent to which these activities (facilities or projects) employ mitigation measures to reduce such impacts. The cumulative impacts from general trends and activities would range from minimal (e.g., minor ground-disturbing activities associated with localized development in the area, see NRC 2011d) to noticeable (e.g., sufficient development to noticeably disturb soil near the storage facility, see NRC 2012a).

6.4.6.2 Potential Cumulative Impacts from Other NRC-Regulated or Spent Fuel-Related Activities

Cumulative impacts on geologic resources and soils could result from other NRC-regulated or spent fuel-related activities, such as decommissioning of the reactor power block (including the spent fuel pool), ISFSI, and DTS.

Activities associated with decommissioning of the reactor that have a potential to affect soils include (1) addition and expansion of staging and laydown areas for equipment and (2) construction of temporary buildings, roads, and parking areas. In the Decommissioning GEIS for power reactors (including spent fuel pools) (NRC 2002), the NRC determined that impacts on the soils from these activities would be temporary and would not be detectable or destabilizing. For example, in the case of most reactor sites, sufficient previously disturbed areas are available for staging, laydown, and construction sites. Therefore, in the Decommissioning GEIS, it was not anticipated that additional land would need to be disturbed, thereby reducing the potential for increased soils impacts (NRC 2002). In addition, implementing best management practices (BMPs) would reduce soil erosion and compaction. These practices include, but are not limited to, minimizing the amount of disturbed land, stockpiling topsoil on laydown areas prior to use, mulching and seeding in disturbed areas, covering loose materials with geotextiles, using silt fences to reduce sediment loading to surface water, and installing proper culvert outlets to direct flows in streams or drainages. Given that the impacts from decommissioning reactors and spent fuel pools would be similar to that described in the Decommissioning GEIS for reactors, impacts on onsite soils during decommissioning of reactors and spent fuel pools are expected to be SMALL.

Activities associated with decommissioning of ISFSIs that could affect geology and soils include (1) construction of roads and parking areas used during the demolition of the storage pads, casks, and support facilities and (2) removing any contaminated soils identified (from both radiological and nonradiological inadvertent spills) during the final radiological site survey under 10 CFR Part 20, Subpart E, “Radiological Criteria for License Termination.” In most cases, impacts associated with decommissioning of ISFSIs would be similar to or less than those impacts associated with construction of ISFSIs. After decommissioning activities are complete, the area previously occupied by the ISFSIs would typically be covered with topsoil, contoured,

and replanted with native vegetation (NRC 2005c). For example, the NRC assumed that the types and magnitude of impacts from decommissioning an ISFSI would be similar to that described in the Calvert Cliffs ISFSI License Renewal EA (NRC 2012b) because the facility is a typical size expected for an ISFSI and the analysis assumed typical decommissioning practices. Specifically, impacts on soils are related to the temporary disturbance of soil horizons as the ISFSI foundation is removed and leveling and regrading of the ISFSI area following decommissioning (NRC 2012b). The NRC expects that subsurface geology would not be impacted by ISFSI decommissioning because decommissioning activities typically do not extend to a depth that affects the geology (NRC 2002). Because the impacts from decommissioning at-reactor and away-from-reactors ISFSIs would be similar to that described in site-specific ISFSI EAs and EISs, impacts on geology and soils during decommissioning are expected to be SMALL.

6.4.6.3 Conclusion

Cumulative impacts on geologic resources and soils include the incremental effects from continued storage when added to the aggregate effects of other past, present, and reasonably foreseeable future actions. As described in Sections 4.6 and 5.6, the incremental impacts from continued storage on geologic resources and soils is SMALL for all scenarios at both at-reactor and away-from-reactor storage facilities. In addition, past, present, and reasonably foreseeable activities take place in the geographic area of interest that could contribute to cumulative effects to geology and soils. The cumulative impacts on geology and soils from continued storage when added to other past, present, and reasonably foreseeable Federal and non-Federal activities, such as power plant construction or urbanization, would range from SMALL to MODERATE. A SMALL impact would occur if no other actions occur that had overlapping, noticeable effects on geological resources. A MODERATE impact would occur if other Federal or non-Federal actions, such as construction of new energy facilities, had overlapping impacts with the continued storage of waste that noticeably alter soil and geological resources. At storage facilities where the cumulative impacts would be MODERATE as a result of other Federal and non-Federal activities, the NRC determined that the cumulative impacts would likely remain MODERATE whether or not continued storage occurred because the incremental impacts from continued storage would be minor, especially in comparison to other trends, such as widespread urbanization.

6.4.7 Surface-Water Quality and Use

This section evaluates the effects of continued storage on surface-water resources when added to the aggregate effects of other past, present, and reasonably foreseeable future actions. As described in Sections 4.7 and 5.7, the incremental impacts from continued storage on surface-water resources is SMALL for all timeframes at at-reactor and away-from-reactor storage facilities.

Cumulative Impacts

The geographic area considered in the cumulative surface-water resources analysis includes the portion of waterbodies (e.g., streams, rivers, ponds, estuaries, and marine waters) potentially affected by the at-reactor or away-from-reactor storage facility.

6.4.7.1 Potential Cumulative Impacts from General Trends and Activities

Potential cumulative impacts on surface waterbodies would include conflicts in consumptive water use and changes to flow patterns and chemical compositions in waterbodies receiving discharges from the reactor plant or storage facility (e.g., NRC 2011a–e, 2012a, 2013a–c). For at-reactor and away-from-reactor storage sites, cumulative impacts could occur because of multiple activities that affect the same waterbody (e.g., conflicting water demands to support urban, agricultural, commercial, and industrial developments). In addition, climate change can affect surface-water resources near at-reactor and away-from-reactor storage sites because of runoff from more intense storms, drought, flooding, and sea-level rise (GCRP 2014). For at-reactor storage facilities, additional cumulative impacts on surface-water resources would include (1) cumulative impacts due to the various impacts from an individual power plant over time (e.g., consumptive water use, altered current patterns at intake and discharge structures, altered chemical gradients) and (2) cumulative impacts due to closely sited power plants (e.g., consumptive water-use conflicts, additive effects of cooling-tower discharges on water temperature, and chemical composition) (NRC 2013a).

The magnitude of cumulative impacts resulting from all general trends taking place within the region in which a storage facility is located would depend on the nature and location of the actions relative to important waterbodies, the number and density of actions, and the extent to which these actions (i.e., facilities or projects) employ mitigation measures to minimize such impacts. The cumulative impacts from general trends and activities would range from minimal (e.g., consumptive water use from all water users in the watershed would have minor alterations to overall volume of water in the watershed, see NRC 2011d) to noticeable (e.g., the discharge and runoff of increased levels of dissolved solids, particularly during low-flow conditions, could noticeably alter water quality, see NRC 2011d). In rare situations, the cumulative impacts from general trends and activities could be destabilizing (e.g., increased water demand from power plants and the effects of climate change, especially under extreme drought conditions, could potentially destabilize a river system, see NRC 2011e).

6.4.7.2 Potential Cumulative Impacts from Other NRC-Regulated or Spent Fuel-Related Activities

Cumulative impacts on surface-water resources could result from other NRC-regulated or spent fuel-related activities, such as ground-disturbing activities that could occur during shutdown, preparation activities for transportation of waste to a repository, and decommissioning of the reactor, spent fuel pool, and ISFSI. Impacts could result from activities such as removal of shoreline or in-water structures, dredging or filling a stream or bay, runoff, and surface soil

erosion. In most cases, such surface-water disturbances and water use for dust abatement would be relatively minor and short-term in duration. Stormwater control measures, which would be required to comply with National Pollutant Discharge Elimination System (NPDES) permits, also would minimize migration of sediments or other contaminants into surface waterbodies. Dredging or filling of waterbodies would require permits from the U.S. Army Corps of Engineers (USACE), which could require additional mitigation or BMPs to minimize impacts on surface-water quality. In addition, other Federal, State, or local permits may require or suggest BMPs, and the licensee would likely implement BMPs to minimize erosion and sedimentation and control any runoff, spills, or leaks (NRC 2003, 2005c).

In the Decommissioning GEIS for power reactors (including spent fuel pools), the NRC (2002) determined that there would be minimal impact on surface-water resources and concluded that decommissioning nuclear power plants would result in SMALL impacts on surface-water resources. The NRC's EAs for the Calvert Cliffs, Humboldt Bay, and Diablo Canyon ISFSIs, and the PFSF ISFSI EIS did not identify any significant impacts on surface-water resources during decommissioning of an at-reactor, or away-from-reactor ISFSI (NRC 2003, 2005c, 2001a, 2012b). The NRC assumes that the types and magnitude of impacts from decommissioning an ISFSI at other sites would be similar to those described in the Calvert Cliffs, Humboldt Bay, and Diablo Canyon EAs and the PFSF EIS due to the limited amount of water required for decommissioning and minimal impacts from ground-disturbing activities. Given that the impacts from decommissioning reactors, spent fuel pools, and ISFSIs would be similar to those described in the Decommissioning GEIS for reactors and site-specific ISFSI EAs and EIS, impacts on surface-water resources from decommissioning are not expected to be noticeable.

6.4.7.3 Conclusion

Cumulative impacts on surface-water resources include the incremental effects from continued storage when added to the aggregate effects of other past, present, and reasonably foreseeable future actions. As described in Sections 4.7 and 5.7, the incremental impacts from continued storage on surface-water resources is SMALL for all timeframes at at-reactor and away-from-reactor storage facilities. In addition, past, present, and reasonably foreseeable activities take place in the geographic area of interest that could contribute to cumulative effects on surface-water resources. The cumulative impacts from continued storage when added to other past, present, and reasonably foreseeable Federal and non-Federal activities, such as urbanization, energy development, operation of other nearby power plants, or other water uses, would be SMALL to LARGE depending on the conditions and activities surrounding the site. A SMALL impact would occur if no other actions occur that have overlapping, noticeable effects on surface water. A MODERATE impact would occur if other Federal or non-Federal actions, such as operation of other nearby power plants or future urbanization, had overlapping impacts with the continued storage of waste that noticeably altered availability, flow patterns, and quality of

surface water. A LARGE impact would occur if other Federal or non-Federal actions had overlapping impacts with the continued storage of waste that destabilized surface-water resources by permanently diminishing water quantity and water quality, or adversely altering flow patterns in surface waterbodies. At storage facilities where the cumulative impacts would be MODERATE or LARGE from other Federal or non-Federal activities, the NRC determined that the cumulative impacts would likely remain MODERATE or LARGE whether or not continued storage occurred because the incremental impacts from continued storage would be minor, especially in comparison to other general trends, such as climate change.

6.4.8 Groundwater Quality and Use

This section evaluates the effects of continued storage on groundwater when added to the aggregate effects of other past, present, and reasonably foreseeable future actions. As described in Sections 4.8 and 5.8, the incremental impacts from continued storage on groundwater resources is SMALL for all timeframes at both at-reactor and away-from-reactor storage facilities.

The geographic area considered in the cumulative groundwater resources analysis includes the portion of the uppermost aquifer and offsite public groundwater wells potentially affected by the at-reactor or away-from-reactor storage facility.

6.4.8.1 Potential Cumulative Impacts from General Trends and Activities

For at-reactor storage facilities, two types of cumulative impacts on groundwater include: (1) consumptive water use at an individual power plant over time (e.g., groundwater use for the power plant's potable and reactor water makeup needs) and (2) groundwater quality degradation beneath the individual power plant due to spills and leaks (NRC 2013a). For both at-reactor and away-from-reactor storage facilities, cumulative impacts on groundwater could occur from groundwater demands associated with current and planned urban, commercial, and agricultural developments outside the storage facility site and groundwater quality degradation at the site due to past and present offsite activities. In addition, climate change and alterations in surface topography and watershed use due to new developments can affect groundwater levels and water levels in nearby surface waterbodies (e.g., lakes and rivers). These modifications could lead to changes in groundwater flow rates and reversal in groundwater flow directions at or near the site. For example, groundwater withdrawals at coastal sites could lead to saltwater intrusion. Moreover, intense use of groundwater outside the site for residential, industrial, or agricultural uses may cause land subsidence with temporary or permanent changes in local or regional groundwater hydrology.

The magnitude of cumulative impacts resulting from all actions taking place within the affected groundwater beneath and surrounding the storage facility would depend on the number of actions (facilities or projects) that draw water from the aquifer, the overall demand on the

aquifer, the hydrogeologic characteristics of the aquifer, and whether facilities follow BMPs to protect groundwater resources from degradation and overpumping. The cumulative impacts from general trends and activities would range from minimal (e.g., past and ongoing onsite and offsite activities do not cause noticeable impacts on the quality and quantity of groundwater resources, see NRC 2005d) to noticeable (e.g., past and ongoing onsite and offsite activities do not destabilize, but noticeably alter the quality or quantity of groundwater resources, see NRC 2011f). In rare situations, the cumulative impacts from general trends and activities could be destabilizing (e.g., groundwater beneath the site and adjacent areas has been adversely affected and noticeably destabilized by past and ongoing onsite and offsite activities, see NRC 2012c).

6.4.8.2 Potential Cumulative Impacts from Other NRC-Regulated or Spent Fuel-Related Activities

Cumulative impacts on groundwater resources could result from other NRC-regulated or spent fuel-related activities, such as ground-disturbing activities that could occur during shut down activities; preparation activities for transportation of waste to a repository; as well as during decommissioning of the reactor, spent fuel pool, and ISFSI. Direct impacts could result from activities such as removal of shoreline, active dredging, or filling of a stream or bay. Indirect impacts may result from effects such as downward infiltration or seepage of contaminated surface water, oil, or other fluids from disturbed ground surface or streams into underlying groundwater; or from inadvertent changes in horizontal hydraulic gradients from the site to the nearest surface waterbody. These types of impacts could alter groundwater quality and flow rates, reverse groundwater flow directions, and induce saltwater intrusion at sites near the ocean. In most cases, however, groundwater disturbances would result in relatively minor impacts (NRC 2002). Water demand for power plant operational cooling would decrease during final power reactor shutdown activities and decommissioning. Water withdrawals would continue to be subject to applicable water appropriation or allocation permit requirements, as well as Clean Water Act Section 316(b) requirements for minimizing adverse environmental impacts associated with the use of cooling-water intake structures. This would also limit the impact on surficial groundwater systems. NPDES permits would prescribe effluent limits for the facility's surface-water discharge to minimize the potential for indirect contamination of groundwater. Dredging or filling of waterbodies would require permits from the USACE, which could require additional mitigation or BMPs to minimize inadvertent changes in site hydrogeology and the potential for seawater intrusion at a site near the ocean.

In the Decommissioning GEIS for nuclear power reactors (including spent fuel pools), the NRC (2002) determined that there would be minimal impact on groundwater use and quality and concluded that decommissioning nuclear power plants would result in SMALL impacts on groundwater. The NRC's EAs and EISs for the Calvert Cliffs, Humboldt Bay, and Diablo Canyon ISFSIs, and the PFSF ISFSI EIS did not identify any significant impacts on groundwater resources during decommissioning of an at-reactor, or away-from-reactor ISFSI (NRC 2001a,

2003, 2005c, 2012b). The NRC assumes that the types and magnitude of impacts from decommissioning an ISFSI at other sites would be similar to those described in the Calvert Cliffs, Humboldt Bay, and Diablo Canyon EAs and the PFSF EIS because a similar amount of water use is expected. Given that the impacts from decommissioning reactors, spent fuel pools, and ISFSIs would be similar to those described in the Decommissioning GEIS for reactors and site-specific ISFSI EAs and EIS, impacts on groundwater from decommissioning are expected to be SMALL.

6.4.8.3 Conclusion

Cumulative impacts on groundwater resources include the incremental effects from continued storage when added to the aggregate effects of other past, present, and reasonably foreseeable future actions. As described in Sections 4.8 and 5.8, the incremental impacts from continued storage on groundwater resources is SMALL for all timeframes at both at-reactor and away-from-reactor storage facilities. In addition, past, present, and reasonably foreseeable activities take place in the geographic area of interest that could contribute to cumulative effects to groundwater. The cumulative impacts from continued storage when added to other past, present, and reasonably foreseeable Federal and non-Federal activities; such as urbanization, energy development, landfills, agricultural, industrial, or other water users; range from SMALL to LARGE depending on the conditions and activities surrounding the site. A SMALL impact would occur if continued storage and no other actions occur that have overlapping, noticeable effects on groundwater. A MODERATE impact would occur if other Federal or non-Federal actions, such as operation of other nearby power plants or future urbanization, had overlapping impacts with the continued storage of waste that noticeably altered groundwater quality and/or with the continued withdrawals of groundwater that may adversely impact site groundwater hydrology. A LARGE impact would occur if elevated radionuclide concentrations in groundwater from past and ongoing onsite and offsite activities or significant changes in groundwater hydrology at or near the site (e.g., altered hydraulic interactions between underlying shallow and confined aquifers, or groundwater flow reversal, which may lead to saltwater intrusion at a site near the ocean) occur that would destabilize the quality and quantity of groundwater resources. At storage facilities where the cumulative impacts would be MODERATE or LARGE from other Federal or non-Federal activities, the NRC determined that the cumulative impacts would likely remain MODERATE or LARGE whether or not continued storage occurred because the incremental impacts from continued storage would be minor, especially in comparison to other general trends, such as climate change.

6.4.9 Terrestrial Resources

This section evaluates the effects of continued storage on terrestrial resources, including terrestrial special status species and habitats, when added to the aggregate effects of other past, present, and reasonably foreseeable future actions. As described in Section 4.9, the incremental impact on terrestrial resources from continued storage is SMALL for at-reactor

storage facilities during all timeframes. As described in Section 5.9, the incremental impacts at away-from-reactor storage facilities during the short-term timeframe would be SMALL to MODERATE, depending on whether construction activities noticeably alter suitable habitat for local terrestrial species. During the long-term and indefinite storage timeframes, the impacts at away-from-reactor storage facilities would be SMALL.

The geographic area considered includes terrestrial habitats on or adjacent to the at-reactor or away-from-reactor storage facility site affected by continued storage as well as other terrestrial habitats in the surrounding landscape closely interconnected by movement or migration of species. In addition, terrestrial ecology evaluations focus on the habitats and species, both plants and animals, within an ecosystem.

6.4.9.1 Potential Cumulative Impacts from General Trends and Activities

Cumulative impacts on terrestrial habitats and wildlife may occur because of habitat loss and degradation, disturbance and displacement, injury and mortality, and obstruction of movement (e.g., NRC 2011a–e, 2012a, 2013a–c). Factors that could influence impacts on terrestrial resources include exposure to elevated noise levels and contaminants, altered surface-water and groundwater quality and flow patterns, and hazards associated with direct contact with physical structures (e.g., bird collisions with buildings and other structures). Adverse impacts typically result from activities (e.g., construction) associated with urbanization, industrial and commercial development, agricultural development, transportation development, water projects, and regional tourism and recreation. Migratory and mobile species may be affected by activities carried out in locations remote from the storage facility site. Vegetative communities (including floodplain and wetland communities) also may be affected by activities (e.g., clearing and grading) associated with these actions, thus creating conditions favorable for invasive species to establish in the area.

Climate change may add to the cumulative impact on terrestrial species and habitats (e.g., NRC 2011a–e, 2012a, 2013a–c). Climate models project that there will be changes in precipitation rates in the United States and that these changes could alter the character of terrestrial habitats (GCRP 2014). This could further stress terrestrial resources affected by the activities described above. For example, reduced precipitation could contribute to drawdowns in some cooling-water sources and contribute to impacts on shoreline habitats of those systems. Certain areas might experience increased, instead of decreased, precipitation. In these areas, increased precipitation and sea-level rise could inundate low-lying areas at coastal facilities (e.g., NRC 2011d). Storm frequency and intensity also could increase, and temperatures could vary. The position of ecoregions can be expected to shift in response to these changes, and terrestrial ecosystems can be expected to experience gradual transitions that will stress species and habitats (GCRP 2014). Similarly, species ranges may shift in accordance with the changing environmental conditions and habitats (GCRP2014). During continued storage, a shift in species ranges could result in a storage facility affecting certain species that were not present

prior to continued storage. If the species is protected under the Endangered Species Act of 1973, as amended (ESA), and if the criteria in 50 CFR Part 402 are met for initiation or reinitiation of Section 7 consultation, the NRC would be required to initiate or reinitiate ESA Section 7 consultation with the U.S. Fish and Wildlife Service (FWS) or National Marine Fisheries Service (NMFS). As described in Section 4.11, the NRC would evaluate any potential impacts on those species and FWS or NMFS may require mitigation to minimize impacts on those species.

The magnitude of cumulative impacts resulting from all general trends taking place within the region in which a storage facility is located would depend on the nature and location of the actions relative to important terrestrial resources, the number (and density) of actions, and the extent to which these actions (facilities or projects) employ mitigation measures to minimize such impacts. The cumulative impacts from general trends and activities would range from minimal (e.g., temporary and minor changes to terrestrial habitat from limited development in the area, see NRC 2011b) to noticeable (e.g., noticeable wetland loss and fragmentation of wetland and upland forest habitats, see NRC 2012a).

6.4.9.2 Potential Cumulative Impacts from Other NRC-Regulated or Spent Fuel-Related Activities

Cumulative impacts on terrestrial resources could result from other NRC-regulated or spent fuel-related activities, such as ground-disturbing activities that could occur during shutdown activities; preparation activities to transport waste to a repository; and decommissioning of the reactor, spent fuel pool, and ISFSI. For example, incremental impacts could result from shoreline activities (dredging or filling of wetlands), operation of the cooling system on shoreline vegetation (water withdrawal and discharge water temperature increases), and habitat disturbance and fragmentation from development or removal of infrastructure and power transmission-line and cooling-water pipeline rights-of-ways to support future projects.

Incremental impacts from continued storage may result from effects such as runoff because of ground-disturbing activities and surface erosion. To help protect terrestrial habitats, stormwater control measures, which would be required to comply with NPDES permitting, would minimize erosion and the flow of disturbed soils or other contaminants into terrestrial habitats. Some activities could require permits from the USACE, which would require mitigation for impacts on jurisdictional wetlands. Consultation with the FWS and other Federal, State, or local groups could result in the identification of additional mitigation or BMPs to minimize impacts on terrestrial resources from noise, dust, migratory bird collisions with crane booms or other construction equipment, and habitat alteration from introduction of invasive plant species. In most cases, terrestrial disturbances would result in relatively minor, short-term impacts (e.g., NRC 2006, 2011e).

In the Decommissioning GEIS for power reactors (including spent fuel pools), NRC (2002) determined that terrestrial resources resulting from activities occurring within the facility's operational areas would be SMALL. The NRC's EAs for the Calvert Cliffs (NRC 2012b), Humboldt Bay (NRC 2005c), and Diablo Canyon ISFSIs (NRC 2003), and the PFSF ISFSI EIS (NRC 2001a) did not identify any significant impacts on terrestrial resources during decommissioning of an at-reactor or away-from-reactor ISFSI. The NRC assumes that the types and magnitude of impacts from decommissioning an ISFSI at other sites would be similar to that described in the Calvert Cliffs, Humboldt Bay, and Diablo Canyon EAs and the PFSF EIS because of the limited size and minimal impacts from ground-disturbing activities. Therefore, impacts from decommissioning would likely result in relatively short-term impacts and, most of the time, within previously disturbed areas. Given that the impacts from decommissioning reactors, spent fuel pools, and ISFSIs would be similar to impacts described in the Decommissioning GEIS for reactors and site-specific ISFSI EAs and EIS, impacts on terrestrial resources from decommissioning are expected to be minimal.

6.4.9.3 Conclusion

Cumulative impacts on terrestrial resources include the incremental effects from continued storage when added to the aggregate effects of other past, present, and reasonably foreseeable future actions. As described in Section 4.9, the incremental impact from continued storage on terrestrial resources is SMALL for at-reactor storage facilities during all timeframes. As described in Section 5.9, the incremental impacts at away-from-reactor storage facilities during the short-term timeframe would be SMALL to MODERATE, depending on whether construction activities noticeably alter suitable habitat for local terrestrial species. During the long-term and indefinite storage timeframes, the impacts at away-from-reactor storage facilities would be SMALL. In addition, past, present, and reasonably foreseeable activities that take place in the geographic area of interest could contribute to cumulative effects to terrestrial resources. The cumulative impacts from continued storage when added to other past, present, and reasonably foreseeable Federal and non-Federal activities, such as urbanization and energy development, range from SMALL to MODERATE depending on the conditions and activities surrounding the site. At sites where continued storage has minimal impacts on terrestrial resources and no other actions occur that have overlapping, noticeable effects on terrestrial resources, the cumulative impacts can be expected to be SMALL. At sites where construction of an away-from-reactor storage facility has noticeably altered terrestrial resources, or other actions have overlapping, noticeable effects on terrestrial resources, the cumulative impacts can be expected to be MODERATE. For example, in more urbanized areas where certain habitats are limited, MODERATE cumulative impacts may be possible if other Federal or non-Federal actions, such as operation of other nearby power plants or future urbanization, have overlapping impacts with the continued storage of waste that noticeably altered terrestrial resources. For at-reactor storage facilities where the cumulative impacts would be MODERATE from other Federal or non-Federal activities, the NRC determined that the cumulative impacts would likely remain

MODERATE whether or not continued storage occurred because the incremental impacts from an at-reactor continued storage facility would be minor, especially in comparison to other general trends, such as climate change or urbanization.

6.4.10 Aquatic Resources

This section evaluates the effects of continued storage on aquatic resources, including aquatic special status species, when added to the aggregate effects of other past, present, and reasonably foreseeable future actions. As described in Sections 4.10 and 5.10, the incremental impacts from continued storage on aquatic resources is SMALL for all timeframes at both at-reactor and away-from-reactor storage facilities.

The geographic area considered in this analysis includes affected aquatic habitats on or adjacent to the at-reactor or away-from-reactor storage facility site as well as other aquatic habitats in the surrounding landscape closely interconnected by movement or migration of species using affected habitats. Depending on the site, this could include the potentially affected portion of streams, rivers, ponds, lakes, estuaries, or nearshore habitats of marine waters.

6.4.10.1 Potential Cumulative Impacts from General Trends and Activities

Cumulative impacts on aquatic habitats and species can include (1) loss and degradation of habitat; (2) species disturbance, displacement, injury, and mortality; (3) obstruction of movement; and (4) introduction and spread of invasive species and diseases (as described in NRC 2011a–e, 2012a, 2013a–c). These impacts result from many general trends identified in Table 6-1, such as industrial, commercial, agricultural, and transportation development; increased water use and discharges to natural waterbodies from power plant operations (including potential replacement power); habitat modification associated with urbanization and water development projects; commercial and recreational fishing; and regional tourism and recreation. For aquatic resources near at-reactor storage facilities, additional cumulative impacts may include impacts from an individual power plant over time (e.g., entrainment, impingement, radiological impacts, thermal discharges, and chemical discharges from the power plant), (2) the cumulative impacts due to closely sited power plants (e.g., the additive effects of entrainment, impingement, radiological impacts, thermal discharges, and chemical discharges from all nearby power plants), and (3) cumulative impacts due to multiple general trends that affect the same waterbody at the reactor (e.g., dams, agriculture, urban, and industrial development) (NRC 2013a).

Climate change may add to the cumulative impact on aquatic species and habitats (e.g., NRC 2011a–e, 2012a, 2013a–c). Changes to aquatic habitats could result from increased runoff, increased surface-water temperature, increased storm intensity and frequency, sea-level rise, ocean acidification, and other biological stressors (GCRP 2014). The position of

ecoregions can be expected to shift in response to these changes, and marine ecosystems can be expected to experience gradual transitions, which would stress species and habitats. Similarly, species ranges may shift in correspondence to the changing environmental conditions and habitats (GCRP 2014). In addition, cooling system operations or other activities could increase the mortality of phytoplankton and macroalgae, which sequester atmospheric CO_2. A reduction in these populations could mean that fewer organisms would be present to sequester atmospheric CO_2, which may contribute to climate change.

During continued storage, a shift in species ranges due to climate change or other activities could result in a storage facility affecting certain species that were not present prior to continued storage. If the species is protected under the ESA, and if the criteria in 50 CFR Part 402 are met for initiation or reinitiation of Section 7 consultation, the NRC would be required to initiate or reinitiate ESA Section 7 consultation with the FWS or NMFS. As described in Section 4.11, the NRC would evaluate any potential impacts on those species, and the FWS or NMFS may require mitigation to minimize impacts on those species.

The magnitude of cumulative impacts resulting from all general trends taking place within the region in which a storage facility is located would depend on the nature and location of the actions relative to important waterbodies, the number (and density) of actions, and the extent to which these actions (facilities or projects) employ mitigation measures to minimize such impacts. The cumulative impacts from general trends and activities would range from minimal (e.g., temporary and minor changes to aquatic habitat from limited development in the area, see NRC 2011c) to noticeable (e.g., past power plant operations resulting in a noticeable decline for certain fish species, see NRC 2012a). In rare situations, the cumulative impacts from general trends and activities could be destabilizing (e.g., if cold-water fish species significantly decline in population as a result of simultaneously being subjected to impingement and entrainment, intense commercial fishing efforts, and warmer waters from climate change, see NRC 2011g).

6.4.10.2 Potential Cumulative Impacts from Other NRC-Regulated or Spent Fuel-Related Activities

Cumulative impacts on aquatic resources could result from other NRC-regulated or spent fuel-related activities, such as shutdown activities; preparing waste for transportation to a repository; and decommissioning of the reactor power block (including the spent fuel pool), ISFSIs, and DTS. Ground-disturbing activities could include the removal of shoreline or in-water structures or the active dredging or filling of a stream or bay, which could result in increased runoff and surface erosion. In most cases, impacts on aquatic resources would be minor and short-term. Aquatic habitats would likely be protected by stormwater control measures, which would minimize the flow of disturbed soils or other contaminants into aquatic features. These measures would be required to comply with NPDES permits. Dredging or filling of waterbodies would require permits from the USACE, which could require additional mitigation or BMPs to minimize impacts on aquatic resources. In addition, other Federal, State, or local permits may

require or suggest BMPs that the licensee would likely implement to minimize erosion and sedimentation and control any runoff, spills, or leaks (e.g., NRC 2003, 2005c).

Shutdown activities could alter aquatic habitats as the amount of thermal discharge decreases or ceases entirely. For example, some aquatic organisms, such as manatees, congregate and overwinter in waters that are warmer than the surrounding water because of thermal discharge from the plant. As a result, manatees as well as other organisms, such as, sea turtles, or fish, could experience cold shock because of the change in temperature. Some of these species are protected under the ESA. As described in Section 4.11, for nuclear power plants with a Biological Opinion, the NRC would need to reinitiate consultation with the FWS or NMFS if there is a significant change in the plant parameters described in the Biological Opinion that could affect listed species or designated critical habitats in a manner or to an extent not previously considered, such as reduced thermal discharge, and if the criteria in 50 CFR 402.16 are met for reinitiation of Section 7 consultation. Consultation under the ESA would include an assessment and potential mitigation factors to offset cold shock or other potential impacts on listed species. In addition, operation of the spent fuel pool would reduce this impact because some thermal discharge would be expected during spent fuel pool operations, as described in Section 4.10.

In the Decommissioning GEIS for power reactors (including spent fuel pools), the NRC (2002) determined that there would be minimal impact on aquatic resources and concluded that decommissioning nuclear power plants would result in SMALL impacts on aquatic resources. The NRC's EAs for the Calvert Cliffs, Humboldt Bay, and Diablo Canyon ISFSIs, and the PFSF ISFSI EIS did not identify any significant impacts on aquatic resources during decommissioning of an at-reactor or away-from-reactor ISFSI (NRC 2001a, 2003, 2005c, 2012b). The NRC assumes that the types and magnitude of impacts from decommissioning an ISFSI at other sites would be similar to that described in the previous EAs and EIS because of the limited amount of water required for decommissioning and minimal impacts from ground-disturbing activities. Given that the impacts from decommissioning reactors, spent fuel pools, and ISFSIs would be similar to that described in the Decommissioning GEIS for reactors and site-specific ISFSI EAs and EISs, impacts on aquatic resources from decommissioning is expected to be minimal.

6.4.10.3 Conclusion

Cumulative impacts on aquatic resources include the incremental effects from continued storage when added to the aggregate effects of other past, present, and reasonably foreseeable future actions. As described in Sections 4.7 and 5.7, the incremental impacts from continued storage on aquatic resource is SMALL for all timeframes at both at-reactor and away-from-reactor storage facilities. In addition, past, present, and reasonably foreseeable activities take place in the geographic area of interest that could contribute to cumulative effects on aquatic resources. The cumulative impacts from past, present, and reasonably foreseeable Federal and non-Federal activities; such as urbanization, energy development, or other water users; would range from SMALL to LARGE depending on the conditions and activities surrounding the

site. At sites where the surrounding development has been limited and no other actions occur that have overlapping, noticeable effects on aquatic resources, the cumulative impacts can be expected to be SMALL. MODERATE cumulative impacts could occur if other Federal or non-Federal actions, such as operation of other nearby power plants or future urbanization, had overlapping impacts with the continued storage of waste that noticeably altered aquatic resources. LARGE impacts are not as likely but could occur under exceptional circumstances such as if other Federal or non-Federal actions, such as intense fishing pressure or changes in aquatic habitats from climate change, had overlapping impacts with the continued storage of waste that destabilized aquatic resources. At storage facilities where the cumulative impacts would be MODERATE or LARGE from other Federal or non-Federal activities, the NRC determined that the cumulative impacts would likely remain MODERATE or LARGE whether or not continued storage occurred because the incremental impacts from continued storage would be minor, especially in comparison to other general trends, such as climate change or fishing.

6.4.11 Historic and Cultural Resources

This section evaluates the effects of continued storage on historic and cultural resources when added to the aggregate effects of other past, present, and reasonably foreseeable future actions. As described in Sections 4.12 and 5.12, the incremental impacts from continued storage on historic and cultural resources would be SMALL (no impacts on historic and cultural resources) during short-term storage for at-reactor ISFSIs. During short-term for away-from reactor ISFSIs and during long-term and indefinite storage timeframes at away-from-reactor and at-reactor ISFSIs, the impacts could range from SMALL to LARGE.

The geographic area considered in the cumulative historic and cultural resources analysis includes the area of potential effect that may be affected by land-disturbing or other operational activities associated with continued storage of spent fuel, including the viewshed. This determination is made irrespective of land ownership or control. Cumulative impacts on historic and cultural resources relate to the damage or destruction of these resources (i.e., archaeological sites, historic structures, and traditional cultural properties, or their context). Impacts to historic and cultural resources (e.g., archaeological sites or historic structures) would occur if these resources in the area of potential effect are physically removed or disturbed. In this regard, potential cumulative impacts for this resource area are localized and limited to the area of physical disturbance. Impacts could occur if a licensing action results in the introduction of significant visual intrusions within the viewshed. Historic and cultural resources are nonrenewable resources that are affected by natural and man-made actions. Once these resources are removed or destroyed, they cannot be restored, rebuilt, or repaired; therefore, the impact of destruction of historic and cultural resources is a cumulative impact.

6.4.11.1 Potential Cumulative Impacts from General Trends and Activities

Cumulative impacts on historic and cultural resources typically result from ground-disturbing activities (e.g., earthmoving, blasting, grading, and excavation) within the area of potential effect and are site-specific. Impacts could occur from activities associated with new energy projects (e.g., replacement power facilities) or potential industrial, commercial, agricultural, and transportation if development occurs within the area of potential effect (NRC 2013a). For example, if a new energy project is co-located with the existing at-reactor or away-from-reactor ISFSI, there could be adverse impacts on historic properties or historic and cultural resources associated with the construction and operation of the new facility. Such activities may directly damage or destroy cultural artifacts or increase the potential for their exposure by accelerating erosion, leaving them vulnerable to theft and vandalism.

The magnitude of cumulative impacts resulting from general trends taking place within and surrounding the area of potential effect would depend on the nature and location of the actions (facilities or projects), what resources are present, the extent of land disturbance, whether cultural resource surveys are conducted, and the extent to which these actions employ mitigation measures. Additionally, only Federal undertakings require compliance with the National Historic Preservation Act (NHPA) Section 106 procedural requirements. However, some States have similar procedural or environmental review requirements. Cumulative impacts can range from minimal (e.g., no impacts on historic and cultural resources, see NRC 2011g) to noticeable (e.g., construction and operation of a new coal-fired power plant or new transmission lines would result in a noticeable impact on historic and cultural resources, see NRC 2011c), to destabilizing (e.g., impacts on three National Register listed/eligible historic properties including two historic buildings/structures—Baltimore & Drum Point Railroad [CT–1259] and Camp Conoy [CT–1312]—and one archaeological site [18CV474] that may be the remnants of a residence associated with the lives of slaves and/or tenants, sharecroppers, or freed African Americans, see NRC 2011d).

6.4.11.2 Potential Cumulative Impacts from Other NRC-Regulated or Spent Fuel-Related Activities

Cumulative impacts on historic and cultural resources could result from other NRC-regulated or spent fuel-related activities, such as decommissioning of the reactor power block (including the spent fuel pool), ISFSI, and DTS.

The environmental impacts associated with reactor decommissioning were assessed in the Decommissioning GEIS (NRC 2002). Activities associated with decommissioning of the reactor power block (including the spent fuel pool) that could affect historic and cultural resources include (1) addition and expansion of staging and laydown areas for equipment, (2) construction of temporary buildings and parking areas, (3) stabilization, (4) decontamination and dismantlement, and (5) removal of large reactor components (NRC 2002, 2013a). These

activities could affect cultural resources primarily via land disturbance, which could damage or destroy the resource, or alter the contextual setting of historic and cultural resources (NRC 2002). Decommissioning activities conducted within the operational areas (i.e., the power block) are not expected to affect historic and cultural resources because much of the land within and immediately surrounding the power block was extensively disturbed during initial nuclear power plant construction. Therefore, if ground-disturbing activities are limited to operational areas, impacts on historic and cultural resources would be SMALL (NRC 2002). Should ground-disturbing activities occur outside of power block, some impacts could be noticeable or destabilizing; there could be impacts on historic and cultural resources (NRC 2002). Prior to ground-disturbing activities commencing in areas outside the power block area, cultural resource surveys should be conducted to identify and protect any historic properties and other historic and cultural resources (i.e., adherence to management plans and procedures).

Activities associated with decommissioning of ISFSIs include dismantling and removing the concrete storage casks, concrete pads, and support facilities, including the DTS, and removing any contaminated soils identified during the final radiological site survey. A review of NRC EAs and EISs for specifically licensed at-reactor and away-from-reactor ISFSIs did not identify any significant impacts on historic and cultural resources during decommissioning (e.g., NRC 2001a, 2003, 2005a–c, 2009, 2012b). However, prior to decommissioning activities commencing, a final decommissioning plan must be submitted to the NRC for review and approval in accordance with 10 CFR 72.54(g)(1)–(6), 72.54(d), and 72.54(i). Impacts associated with eventual decommissioning of the generally licensed ISFSI would be considered when a licensee submits its post-shutdown decommissioning activities report for review under 10 CFR 50.82(a)(4) or 10 CFR 52.110(d)(1) and its license termination plan for review and approval per 10 CFR 50.82(a)(9) or 10 CFR 52.110(i). NRC authorization of a final decommissioning plan or license termination plan would constitute Federal actions under NEPA and would be undertakings under the NHPA. The site-specific environmental review and compliance with the NHPA process could identify historic properties, adverse effects and potentially resolve adverse effects to historic properties and impacts on other historic and cultural resources. After decommissioning is completed, the area previously occupied by the at-reactor or away-from-reactor ISFSI would typically be covered with topsoil, contoured, and replanted with native vegetation (NRC 2005a). Should ground-disturbing activities occur outside of the ISFSI footprint, some impacts could be noticeable or destabilizing. The magnitude of impact largely depends on what resources are present, the extent of proposed land disturbance, if the area has been previously surveyed, and if the licensee has management plans and procedures that are protective of historic and cultural resources.

6.4.11.3 Conclusion

Cumulative impacts on historic and cultural resources include the incremental effects from continued storage when added to the aggregate effects of other past, present, and reasonably

foreseeable future actions. As described in Sections 4.12 and 5.12, the incremental impacts from continued storage on historic and cultural resources would be SMALL for the short-term timeframe for an at-reactor ISFSI; during the short-term for away-from-reactor ISFSIs and during long-term and indefinite storage timeframes at away-from-reactor and at-reactor ISFSIs, the impacts could range from SMALL to LARGE. This range takes into consideration routine maintenance and monitoring (i.e., no ground-disturbing activities), the absence or avoidance of historic and cultural resources, and potential ground-disturbing activities that could affect historic and cultural resources. In addition, the analysis also considers uncertainties inherent in analyzing this resource area over long timeframes. These uncertainties include any future discovery of previously unknown historic and cultural resources; resources that gain significance within the vicinity and the viewshed (e.g., nomination of a historic district) due to improvements in knowledge, technology, and excavation techniques; and changes associated with predicting resources that might be significant to future generations. In addition, past, present, and reasonably foreseeable activities take place in the area of potential effect that could also contribute to cumulative effects to historic and cultural resources. The cumulative impacts on historic and cultural resources from continued storage when added to other past, present, and reasonably foreseeable Federal and non-Federal activities could be SMALL to LARGE which could include resources that are present, the extent of proposed land disturbance, previous surveys, and management plans and procedures that are protective of historic and cultural resources. The effect of the actions would be a SMALL impact at sites where continued storage and no other actions occur that have overlapping, noticeable effects on historic and cultural resources within the area of potential effect. MODERATE to LARGE impacts could occur at sites where NRC, or other Federal or non-Federal actions (such as new energy projects and other forms of potential development within and surrounding the area of potential effect), have overlapping impacts with the continued storage of waste that noticeably affect or destabilize historic and cultural resources.

6.4.12 Noise

This section evaluates the effects of continued storage on noise when added to the aggregate effects of other past, present, and reasonably foreseeable future actions. As described in Sections 4.13 and 5.13, the incremental impacts from continued storage on noise is SMALL overall for all timeframes for both at-reactor and away-from-reactor storage facilities.

The geographic area considered in the cumulative noise analysis extends in a radius of about 7.7 km (4.8 mi) from the noise sources originating from an at-reactor or away-from-reactor storage facility site. At a distance of about 3.9 km (2.4 mi) from a noise source, most sound levels would be reduced to less than the 55-dB(A) EPA-recommended threshold for protection against outdoor activity interference and annoyance. A receptor can be affected by noise sources from the at-reactor and away-from-reactor ISFSIs up to about 3.9 km (2.4 mi) away. Therefore, the NRC considered other noise sources within a 3.9 km (2.4 mi) radius of the

receptor for potential cumulative effects. This effectively creates a cumulative geographic area of interest within a 7.7 km (4.8 mi) radius from the spent fuel noise sources.

6.4.12.1 Potential Cumulative Impacts from General Trends and Activities

Noise levels in the vicinity of a storage facility could be the result of activities (e.g., traffic) associated with urban, industrial, and commercial development (including transportation development) and water projects (e.g., NRC 2011a–e, 2012a, 2013a–c). The magnitude of cumulative impacts resulting from all general trends would depend on the plant's proximity to these activities. Because noise impacts cease once an activity stops, the noise would need to occur at the same time as continued storage in order for the impacts to be overlapping or cumulative.

The magnitude of cumulative impacts resulting from all general trends taking place within the cumulative geographic area of interest would (1) be dominated by the loudest audible source because noise does not add linearly and (2) depend on the sound level generated by the noise sources and the proximity of the receptor to the noise sources. The cumulative impacts from general trends and activities would range from minimal (e.g., the sound levels generated by the noise sources and proximity of these sources to receptors only produce minor impacts, see NRC 2011d), to noticeable (e.g., potential noise levels from cooling-water system pumps associated with the operation of co-located nuclear reactor units, see NRC 2011e). The NRC also acknowledges that the noise impacts from operation of a fossil-fuel power plant near a storage facility could result in noticeable impacts (e.g., delivery of coal and limestone by train, see NRC 2011e).

6.4.12.2 Potential Cumulative Impacts from Other NRC-Regulated or Spent Fuel-Related Activities

Cumulative noise impacts could result from other NRC-regulated or spent fuel-related activities, such as (1) decommissioning of the reactor power block (including the spent fuel pool), ISFSI, and DTS; (2) loading of packages for transportation to a repository; and (3) long-range transportation of spent fuel.

The primary noise source associated with decommissioning of the power reactor block is the use of construction equipment to dismantle and remove buildings and structures. The Decommissioning GEIS (NRC 2002) analyzed noise impacts for decommissioning a reactor (including the spent fuel pools) and determined that the noise impacts would not be noticeable enough to routinely disrupt human activity. However, this analysis was based on the implementation of some mitigation measures (e.g., restrictions on when noise producing activities could be conducted). Unmitigated impacts, however, could be disruptive to human activity. Such mitigation measures may not be required by Federal regulations, but may be required by local ordinances. Given that the impacts from decommissioning reactors and spent

fuel pools considered in this GEIS would be similar to that described in the Decommissioning GEIS, the impacts on at-reactor facilities during decommissioning are expected to be minimal.

The primary noise source associated with decommissioning of an ISFSI and DTS is the use of construction equipment to dismantle and remove concrete storage casks, concrete pads, and support facilities. Although ISFSI decommissioning was not addressed in the Decommissioning GEIS, it was addressed in the PFSF EIS (NRC 2001a). The PFSF EIS concluded that the impacts overall were SMALL. However, the conclusion was based on the fact that the distance between the noise source and nearest resident was 3 km (2 mi) and the 95 dB(A) sound levels at the source would be reduced to ambient conditions at those distances. In a broader application for other locations, the distance between noise source and receptor is important when assessing whether the sound levels alter noticeably important attributes of the source.

The loading of packages for transportation to a repository would have similar noise sources, noise levels, and impact magnitude as the receiving of spent fuel at an away-from-reactor facility from at-reactor locations as described in Section 5.1.2. Therefore, close to the source, noise levels would exceed the 55 dB(A) EPA-recommended level for protection against outdoor activity and interference and annoyance. At distances greater than about 3.9 km (2.4 mi), the noise level of 100 dB(A) at the source would be reduced to below this EPA-recommended protection level.

Disposal of spent fuel requires long-range transportation from the storage site to a repository. The at-reactor storage operation examines the impacts of a facility with a 1,600-MTU capacity, whereas the away-from-reactor storage operation examines the impacts of a facility with a 40,000-MTU capacity. The Yucca Mountain EIS (DOE 2008) assessed the noise impacts at the national and state levels for long-range transport of 70,000 MTHM of spent fuel to the repository. The Yucca Mountain EIS concluded that the noise impacts would be small at the national level in comparison with the impacts of other nationwide transportation activities. At the state level, noise could be noticeable in situations where receptors were near transportation routes. Because the amount of spent fuel and the associated number of shipments (i.e., the frequency at which the source generates noise) considered in the transportation analyses for an at-reactor or away-from-reactor storage site is less than that considered in the Yucca Mountain analyses, the NRC concludes that the transportation noise impacts for an at-reactor or away-from-reactor site would not be greater than the impact magnitude defined in the Yucca Mountain EIS.

6.4.12.3 Conclusion

Cumulative noise impacts include the incremental effects from continued storage when added to the aggregate effects of other past, present, and reasonably foreseeable future actions. As described in Sections 4.13 and 5.13, the incremental impacts from continued storage on noise is overall SMALL for all timeframes at both at-reactor and away-from-reactor storage facilities.

In addition, past, present, and reasonably foreseeable activities take place in the geographic area of interest that that could contribute to cumulative effects to noise. The cumulative impacts from continued storage when added to other past, present, and reasonably foreseeable Federal and non-Federal activities, such as activities from industrial and commercial development, are SMALL to MODERATE depending on the noise sources and proximity to receptors. In most cases, a SMALL cumulative impact would be expected and would occur if no other actions had overlapping, noticeable effects that altered important attributes of the noise. A MODERATE impact could occur if other actions occur that did have overlapping and noticeable impacts that altered important noise attributes such as operation of a nearby fossil-fuel-fired power plant. At storage facilities where the cumulative impacts would be MODERATE from other Federal or non-Federal activities, the NRC determined that the cumulative impacts would likely remain MODERATE whether or not continued storage occurred because the incremental impacts from continued storage would be minor, especially in comparison to other general trends, such as operation of a fossil-fuel-fired power plant.

6.4.13 Aesthetics

This section evaluates the effects of continued storage on aesthetic resources when added to the aggregate effects of other past, present, and reasonably foreseeable future actions. As described in Sections 4.14 and 5.14, the incremental impacts from continued storage on aesthetics is SMALL for all timeframes for an at-reactor storage facility, and SMALL to MODERATE for an away-from-reactor storage facility. The geographic area considered in the cumulative aesthetic resources analysis includes the area from which the at-reactor or away-from-reactor storage facility is visible.

6.4.13.1 Potential Cumulative Impacts from General Trends and Activities

Cumulative impacts on aesthetic resources come from changes to the visual appeal of a tract of land. The magnitude of cumulative impacts on aesthetic resources depends on the degree to which the facility contrasts adversely with the existing landscape and is a function of the visibility of dry storage pads, canisters, and handling facilities from neighborhoods or roads, across waterbodies, or from higher topographic elevations. The visibility of at-reactor ISFSIs is generally lower than the nuclear power plant because of the lower profile of the storage facility. Cumulative impacts also depends in part on the degree of public interest and concern over potential changes to the existing scenic quality.

The continuation of general trends occurring at or near nuclear power plants and storage facilities could result in overlapping aesthetic impacts during continued storage. For example, the construction and operation of energy and infrastructure projects, such as transmission lines and liquefied natural gas terminals, could result in noticeably adverse impacts on the area. Also, increased population growth in the surrounding area could lead to an increase in the number of viewers, the frequency and duration of views, and in the perceived impact level.

Cumulative Impacts

The magnitude of cumulative impacts resulting from all general trends taking place within the region in which a storage facility is located would depend on the number of structures affecting the landscape, the degree of contrast, the degree of visibility (which, in turn, depends on the distance and angle from which the landscape is viewed), the value of the landscape, the number of viewers, the frequency and duration of views, and viewer perception of the impact level. The cumulative impacts from general trends and activities would range from minimal (e.g., limited development resulted in minor changes within the viewshed, [NRC 2011c]) to noticeable (e.g., construction of a new power plant or storage would noticeably alter the scenic quality of the area by introducing an industrial presence into a largely undeveloped landscape, see NRC 2011a and 2001a).

6.4.13.2 Potential Cumulative Impacts from Other NRC-Regulated or Spent Fuel-Related Activities

Cumulative impacts on aesthetic resources could result from other NRC-regulated or spent fuel-related activities, such as changes to operational characteristics of the facility (e.g., the condensation plume from a cooling tower) during shutdown and dismantlement, demolition, and removal of structures during decommissioning could have direct aesthetic impacts. Aesthetic impacts from the removal of structures would be a long-term change, and are generally considered beneficial to the visual appeal of a site.

In the Decommissioning GEIS for power reactors (including spent fuel pools), the NRC (2002) determined that the impacts on aesthetic resources during decommissioning would be SMALL and that any impact would be temporary and would serve to reduce the aesthetic impact of the site. The impacts from decommissioning ISFSIs were not considered in the Decommissioning GEIS. Aesthetic impacts from decommissioning the smaller structure of an ISFSI would be no greater than that for decommissioning a nuclear power plant because of the smaller size of the ISFSI. The NRC's EAs for the Calvert Cliffs, Surry, and Diablo Canyon ISFSIs, and the PFSF ISFSI EIS did not identify any significant impacts on aesthetic resources during decommissioning of an at-reactor or away-from-reactor ISFSI (NRC 2001a, 2003, 2005a, 2012b). The NRC assumes that the types and magnitude of impacts from decommissioning an ISFSI at other sites would be similar to that described in the Calvert Cliffs, Surry, and Diablo Canyon EAs and the PFSF EIS because the activities that take place during decommissioning and the change in visual characteristics that would occur at other sites would be similar to those evaluated in the Calvert Cliffs, Surry, and Diablo Canyon EAs and the PFSF EIS.

Given that the impacts from decommissioning reactors, spent fuel pools, and ISFSIs would be similar to the impacts described in the Decommissioning GEIS for reactors and site-specific ISFSI EAs and EISs, impacts on aesthetic resources from decommissioning are expected to be minimal and any impact would be temporary.

6.4.13.3 Conclusions

Cumulative impacts on aesthetic resources include the incremental effects from continued storage when added to the aggregate effects of other past, present, and reasonably foreseeable future actions. As described in Sections 4.14 and 5.14, the incremental impacts from continued storage on aesthetic resources is SMALL for all timeframes for at-reactor storage facilities and SMALL to MODERATE for away-from-reactor storage facilities. In addition, past, present, and reasonably foreseeable activities take place in the geographic area of interest that could contribute to cumulative effects to aesthetic resources. The cumulative impacts from continued storage and other past, present, and reasonably foreseeable Federal and non-Federal activities range from SMALL to MODERATE depending on the incremental impact from the storage facility and the conditions and activities surrounding the site. A SMALL impact would occur at sites where storage facilities have minimal impacts on the viewshed and no other actions occur that had overlapping, noticeable effects on aesthetic resources. A MODERATE impact would occur if the storage facility has a noticeable impact on the viewshed, or if other Federal or non-Federal actions, such as the construction and operation of other nearby power plants or future urbanization, had overlapping impacts with the continued storage of waste that noticeably altered aesthetic resources. At storage facilities where the incremental impacts are SMALL and cumulative impacts are MODERATE from other Federal or non-Federal activities, the NRC determined that the cumulative impacts would likely remain MODERATE whether or not continued storage occurred because the incremental impacts from continued storage would be minor, especially in comparison to other general trends, such as constructing new power plants.

6.4.14 Waste Management

This section evaluates the effects of continued storage on the capacity and operating lifespan of waste-management facilities when added to the aggregate effects of other past, present, and reasonably foreseeable future actions. The incremental impacts from continued storage on waste management are described in Sections 4.15 and 5.15 and summarized in Table 6-3. In addition to the incremental impacts from continued storage, this cumulative impacts analysis also considers other past, present, and reasonably foreseeable projects that could affect waste management. The geographic area considered in the cumulative LLW and mixed-waste-management resources analysis includes the continental United States because LLW disposal facilities handle waste generated on a national scale. The geographic area considered in the cumulative nonradioactive waste (i.e., hazardous and nonhazardous wastes) management resources analysis includes the area where the continued storage of spent fuel occurs and nonradioactive waste is sent for disposal.

Table 6-3. Summary of Incremental Impacts from Continued Storage on Waste Management

Storage Timeframe	At-Reactor Storage (Section 4.15)		Away-From-Reactor Storage (Section 5.15)	
Short-Term	LLW	SMALL	LLW	SMALL
	Mixed Waste	SMALL	Mixed Waste	SMALL
	Nonradioactive[(a)]	SMALL	Nonradioactive[(a)]	SMALL
Long-Term	LLW	SMALL	LLW	SMALL
	Mixed Waste	SMALL	Mixed Waste	SMALL
	Nonradioactive[(a)]	SMALL	Nonradioactive[(a)]	SMALL
Indefinite	LLW	SMALL	LLW	SMALL
	Mixed Waste	SMALL	Mixed Waste	SMALL
	Nonradioactive[(a)]	SMALL to MODERATE	Nonradioactive[(a)]	SMALL to MODERATE

(a) Nonradioactive waste includes hazardous and nonhazardous wastes.

6.4.14.1 Potential Cumulative Impacts from General Trends and Activities

Cumulative impacts on waste management could include reduction in landfill capacity needed for the proper disposal of the total amount of LLW, mixed waste, and nonradioactive waste resulting from all reasonably foreseeable Federal and non-Federal activities. These impacts result from waste-generating activities associated with residential, commercial, industrial, and military development. The potential cumulative impacts associated with the management of each waste type are discussed below.

Low-Level Waste and Mixed Waste

In addition to LLW generated at operating reactors and other uranium fuel cycle facilities, other radioactive waste-generating activities that can occur in the same regions as operating reactors including activities at DOE and U.S. Department of Defense installations as well as industrial facilities and hospitals where radioisotopes are used for industrial or medical purposes (NRC 2013a). These same activities are potential generators of both LLW and mixed waste.

The magnitude of cumulative waste-management impacts resulting from general trends would depend on current radioactive waste-generating activities, generation rates, potential changes in waste-generating activities and rates, and the extent to which these waste generators employ mitigation measures to reduce such impacts. LLW and mixed waste can only be disposed of in a limited number of disposal facilities, as described in Section 3.14. Depending on the locations of the radioactive waste generators and the locations of available treatment and disposal facilities, there could be cumulative impacts resulting from the transportation, treatment, and disposal of radioactive waste (NRC 2013a). The cumulative impacts from general trends and activities would range from minimal (e.g., minor changes in available disposal capacity and limited development of new governmental, industrial, and medical radioactive waste-generating

activities, see NRC 2013a,b) to noticeable (e.g., loss in available disposal capacity and expanded or new governmental, industrial, and medical radioactive waste-generating activities).

Nonradioactive Waste

In addition to nuclear reactor operations, residential, commercial, and industrial activities also generate nonradioactive waste. Nonradioactive waste includes hazardous and nonhazardous wastes and is typically disposed of in local or regional treatment facilities and landfills. Hazardous waste treatment, storage, and disposal facilities or nonhazardous waste landfills are constructed and operated by local or regional units of government or private companies. The facility size or landfill capacity is based on the projected waste disposal needs for the geographic area or region that the facility or landfill serves. Municipal solid waste landfills in the United States typically have capacities ranging from 1,200,000 m^3 (1,600,000 yd^3) to more than 45,000,000 m^3 (59,000,000 yd^3) of compacted solid waste (EREF 1999).

The magnitude of cumulative impacts from the management of nonradioactive wastes resulting from all waste-generating actions taking place in the area in which a storage facility is located would likely be minimal (e.g., minor changes in available facility or landfill capacity and limited increase of waste generation by new residential, commercial, and industrial development, see NRC 2013a,b) to noticeable (e.g., minor changes or decrease in available capacity and major increase in waste generation by new residential, commercial, and industrial development).

6.4.14.2 Potential Cumulative Impacts from Other NRC-Regulated or Spent Fuel-Related Activities

Cumulative impacts on waste-management resources could result from other NRC-regulated or spent fuel-related activities, such as decommissioning of a nuclear power plant (including the spent fuel pool), ISFSI, and DTS. These activities would generate LLW, mixed waste, and nonradioactive waste. Although it would not affect nonradioactive waste disposal on a regional level because of the local availability of nonradiological disposal facilities, construction and operation of a repository for spent fuel disposal would contribute additional LLW and mixed waste, adding to the cumulative impacts from LLW and mixed waste disposal on the limited number of treatment and disposal facilities available throughout the United States.

Low-Level Waste and Mixed Waste

The LLW and mixed-waste-management impacts from reactor decommissioning, including a spent fuel pool, would depend on the size of the reactor and pool. The estimated volume of LLW generated by reactor decommissioning ranges from 580 m^3 (760 yd^3) to 32,800 m^3 (42,900 yd^3) (NRC 2002). This quantity of LLW would be generated over a period ranging from about 5 to 14 years depending on the decommissioning option undertaken (NRC 2002). A conservative estimate of the LLW generated annually, using the maximum volume of LLW of

32,800 m^3 (42,900 yd^3), is 6,560 m^3 (8,580 yd^3) for a reactor decommissioning lasting 5 years to 2,340 m^3 (3,060 yd^3) for a reactor decommissioning lasting 14 years. This range of annual quantities of LLW is much larger than the average annual quantity of LLW produced during reactor operation, which is about 300 m^3 (392 yd^3) for a pressurized water reactor and about 600 m^3 (785 yd^3) for a boiling water reactor (NRC 2013a). In the License Renewal GEIS, the NRC considered the LLW that would be generated by decommissioning and concluded that there is reasonable assurance that sufficient LLW disposal capacity will be made available when needed for facilities to be decommissioned consistent with NRC requirements (NRC 2013a).

Mixed waste would also be generated at an increased rate during reactor decommissioning relative to reactor operation. The quantity of mixed waste generated during reactor operation is a small fraction of the quantity of LLW (NRC 2013a). Because of similarities in waste-generating activities during reactor operation and decommissioning, the quantity of mixed waste generated during reactor decommissioning is expected to continue to be a small fraction of the quantity of LLW. Despite an increase in the generation rate of mixed waste during decommissioning, the quantity of mixed waste produced is expected to remain small relative to available disposal capacity.

The decommissioning of dry spent fuel storage facilities would also generate LLW and mixed waste. The types and quantities of LLW and mixed waste generated during decommissioning would be similar to facility replacement, as described in Sections 4.15 and 5.15. The NRC has determined, as described in Sections 4.15 and 5.15, that the incremental impacts from the management and disposal of LLW and mixed waste associated with facility replacement would be SMALL for LLW and mixed waste.

The construction and operation of a repository for spent fuel disposal would also generate LLW. The final EIS for the proposed repository at Yucca Mountain, Nevada, projected that 74,000 m^3 (97,000 yd^3) of LLW would be generated from the construction and operation of that facility (DOE 2008). The period of construction and operation of the proposed repository was estimated to be greater than 100 years. The DOE determined that the environmental impacts from management and disposal of LLW would be SMALL, because the treatment and disposal capacity exceeds the demand created by the quantities of LLW generated. The DOE indicated that no mixed waste would be generated during the construction and operation of the repository (DOE 2008).

The magnitude of cumulative waste-management impacts resulting from management and disposal of LLW and mixed waste generated from decommissioning of nuclear facilities and construction and operation of a repository for spent fuel disposal would depend on current radioactive waste-generating activities and generation rates and potential changes in waste-generating activities and rates. It would also depend on the extent to which these waste generators employ mitigation measures to reduce such impacts. The cumulative impacts from general trends and activities would range from minimal (e.g., minor changes in available

disposal capacity and limited or no increases in other NRC-regulated or spent fuel-related radioactive waste-generating activities,) to noticeable (e.g., loss in available disposal capacity and increases in other NRC-regulated or spent fuel-related activities that produce radioactive waste). Large cumulative waste-management impacts could occur in the unlikely event that available disposal capacity decreases and radioactive waste generation increases as a result of multiple other NRC-regulated or spent fuel-related activities occurring concurrently.

Nonradioactive Waste

The nonradioactive waste-management impacts from reactor decommissioning, including a spent fuel pool, would depend on the size of the reactor and pool. Similar to LLW and mixed waste, reactor decommissioning generates nonradioactive waste at an increased rate relative to operation over a period ranging from about 5 to 14 years, depending on the decommissioning option undertaken. Because the increased waste generation during decommissioning occurs for a relatively short period of time and decommissioned reactors must continue to comply with Federal and State regulations in terms of storage, treatment, and disposal of waste, the NRC determined in the License Renewal GEIS (NRC 2013a) that the cumulative impacts resulting from the management of nonradioactive wastes resulting from all waste-generating actions taking place within the region in which an operating reactor is located would be SMALL.

The decommissioning of dry spent fuel storage facilities would also generate nonradioactive waste, primarily nonhazardous waste. The types and quantities of nonradioactive waste generated during decommissioning would be similar to facility replacement, as described in Sections 4.15 and 5.15. The NRC has determined, as described in Sections 4.15 and 5.15, that the incremental impacts from management and disposal of nonradioactive waste associated with dry storage facility replacement would be SMALL for short-term and long-term storage and SMALL to MODERATE for indefinite storage.

The magnitude of cumulative waste-management impacts resulting from management and disposal of nonradioactive waste generated during decommissioning of nuclear facilities would depend on current nonradioactive waste-generating activities and generation rates, potential changes in waste-generating activities and rates in an area, and the extent to which waste generators in an area employ mitigation measures to reduce such impacts. The cumulative impacts from general trends and activities would range from minimal (e.g., minor changes in available landfill capacity and limited or no increases in other NRC-regulated or spent fuel-related radioactive waste-generating activities,) to noticeable (e.g., loss in available landfill capacity and increases in other NRC-regulated or spent fuel-related activities that produce nonradioactive waste). Large cumulative waste-management impacts could occur in the unlikely event that available landfill capacity decreases and nonradioactive nonhazardous waste generation increases as a result of multiple other NRC-regulated or spent fuel-related activities occurring concurrently.

6.4.14.3 Conclusion

Cumulative impacts on waste-management resources include the incremental effects from continued storage when added to the aggregate effects of other past, present, and reasonably foreseeable future actions. The incremental impacts from continued storage on waste-management resources are described in Sections 4.15 and 5.15 and summarized in Table 6-3. In addition, past, present, and reasonably foreseeable Federal and non-Federal activities described in Sections 6.3.1 and 6.3.2, spread across the geographic area of interest (national scale), are SMALL to LARGE for LLW and mixed waste because local, regional, or national waste-management resources might experience minor to destabilizing decreases in their capacity. For nonradioactive waste, the cumulative impacts from other past, present, and reasonably foreseeable Federal and non-Federal activities spread across the geographic area of interest (area surrounding an at-reactor or away-from-reactor spent fuel storage facility) would be SMALL to LARGE. A SMALL impact would occur if local, regional, or national waste-management facilities experience no noticeable decreases in their capacity or operating lifespan from continued storage or other Federal or non-Federal activities. A MODERATE impact would occur if local, regional, or national waste-management facilities experience noticeable decreases in their capacity or operating lifespan. A LARGE impact would occur in the unlikely event that available LLW or nonradioactive nonhazardous waste disposal capacity decreases and LLW or nonradioactive nonhazardous waste generation increases as a result of multiple other NRC-regulated or spent fuel-related activities occurring concurrently. The NRC determined that these cumulative impacts (ranging from SMALL to LARGE) could increase as a result of continued storage of spent fuel because the incremental impacts from continued storage would range from minor to noticeable, which could increase a SMALL cumulative impact to a MODERATE cumulative impact or a MODERATE cumulative impact to a LARGE cumulative impact.

6.4.15 Transportation

This section evaluates the effects of continued storage on transportation when added to the aggregate effects of other past, present, and reasonably foreseeable future actions. As described in Sections 4.16 and 5.16, the incremental impacts from continued storage on nonradiological transportation are SMALL for all timeframes at at-reactor facilities and SMALL to MODERATE at away-from-reactor ISFSIs. The radiological transportation impacts for at-reactor and away-from-reactor continued storage activities are SMALL.

The geographic area considered in the cumulative transportation analysis includes the site of the power plant and at-reactor ISFSI, the site of an away-from-reactor ISFSI, and the local, regional, and national transportation networks and populations that use or live along these networks.

6.4.15.1 Potential Cumulative Impacts from General Trends and Activities

Cumulative transportation impacts involve (1) nonradiological impacts, such as increased traffic (e.g., commuting workers and construction materials) and associated increases in accident risks, injuries, and fatalities and (2) radiological impacts, such as radiation doses from the shipment of radioactive materials including unirradiated fuel, spent fuel, and waste materials (NRC 2011a–e, 2012a, 2013a,b). Traffic impacts can accumulate from multiple actions occurring during the same time period (e.g., overlapping construction projects). Principal contributors to localized traffic that could overlap with storage facility construction and operations include the construction of other energy, water, military, or urbanization projects. Radiation dose impacts can accumulate from multiple shipping activities that overlap during the same time period or from single or multiple shipping actions that occur over time on the same routes. Actions involving shipment of radioactive materials for medical, industrial, research, or other energy projects (NRC 2011a,c,d) could also overlap with continued storage radioactive material shipment impacts.

The magnitude of cumulative impacts resulting from general trends taking place within the region in which a storage facility is located would depend on the nature and location of the actions relative to the storage facility transportation activities. For nonradiological transportation impacts, the cumulative impacts from general trends and activities would range from minimal (e.g., no overlap in traffic with any other development project, see cumulative operational traffic impacts in NRC 2011d) to noticeable (e.g., traffic congestion at specific sites and on roads with limited available capacity to accommodate the increased demand from proposed power plant activities, see NRC 2012a). For radiological transportation impacts, the cumulative impacts would likely be minimal based on factors such as low dose, prior generic impact assessment in 10 CFR 51.52 (spent fuel, LLW), updated supplemental analyses addressing unique site-specific plant characteristics, and the low volume of other regional radioactive materials transportation activities that could overlap with continued storage (NRC 2011a–e, 2013d).

6.4.15.2 Potential Cumulative Impacts from Other NRC-Regulated or Spent Fuel-Related Activities

Cumulative impacts on transportation could result from other NRC-regulated or spent fuel-related activities, such as increases in traffic from workers during final reactor shutdown activities; decommissioning of the reactor power block (including the spent fuel pool), ISFSIs, and DTS; and transportation of spent fuel from an at-reactor or away-from-reactor ISFSI to a repository for disposal.

Nonradiological traffic impacts from reactor shutdown activities would result from a temporary increase in the reactor workforce; however, the number of workers would not be expected to exceed the temporary workforce used for refueling outages. Therefore, the traffic impacts during shutdown would be similar to the traffic impacts during reactor operations. Traffic

impacts during shutdown were evaluated in the License Renewal GEIS in which the NRC (2013a) determined traffic impacts to be SMALL for operating plants. Combined nonradiological and radiological traffic impacts from reactor decommissioning were previously evaluated by the NRC in the Decommissioning GEIS for nuclear reactors (NRC 2002). In that analysis, the NRC evaluated the number of shipments of dismantled equipment, material, and debris from decommissioning. Although the number of shipments can be relatively large, the decommissioning period extends over several years. As a result, the number of LLW shipments per day is low, with an average of less than one shipment per day from the plant (NRC 2002). The materials transported offsite would include all wastes generated onsite. Nonradiological impacts would include increased traffic volume, additional wear and tear on roadways, and potential traffic accidents (NRC 2002). This information supported a conclusion that the transportation impacts from nuclear power plant decommissioning would not be detectable (NRC 2002).

Additional radiological impacts would occur from transportation of (1) spent fuel to a repository for disposal and (2) LLW from decommissioning the reactor, spent fuel pool, and ISFSI. Radiological impacts would include exposure of transportation workers and the general public along the transportation routes. The NRC previously determined that radiological impacts on the public and workers of spent fuel and waste shipments from a reactor are SMALL in several evaluations. For example, the NRC made a generic impact determination in Table S–4 in 10 CFR 51.52 and the supporting analysis (AEC 1972) that the environmental impacts of transportation of fuel and waste to and from a 1,000- to 1,500-MW(e) light water reactor would be SMALL under incident-free and accident conditions. The results of subsequent analyses of transportation impacts in *Final Environmental Statement on Transportation of Radioactive Material by Air and Other Modes* (NRC 1977) and *Reexamination of Spent Fuel Shipment Risk Estimates* (Sprung et al. 2000) confirmed spent fuel transportation impacts are small. Additional site-specific analyses of transportation impacts for power plants that did not meet the conditions of 10 CFR 51.52 also concluded the transportation radiological impacts would be SMALL (NRC 2006, 2008, 2011a–e, 2013c). In the License Renewal GEIS (NRC 2013a), the NRC also concluded that impacts from uranium fuel cycle transportation, including transportation of spent fuel to a repository for disposal, are SMALL for all nuclear plants. More recently, the NRC calculated spent fuel transportation risks for individual shipments in *Spent Fuel Transportation Risk Assessment: Final Report* (NRC 2014) based on current models, data, and assumptions. The analysis modeled responses of transportation packages to accident conditions such as impact force and fire, and calculated risks considering a range of truck and rail accidents of different severities including those involving no release or loss of shielding, loss of shielding only, or loss of shielding and release. That analysis reconfirmed that the radiological impacts from spent fuel transportation conducted in compliance with NRC regulations are low. The NRC also concluded that the regulations for transportation of radioactive material were adequate to protect the public against unreasonable risk (NRC 2014). Based on the generic determination in Table S–4 of 10 CFR 51.52 and the subsequent spent fuel transportation impact analyses

and risk assessments cited above, the NRC concludes the radiological impacts for incident-free and accident transportation of spent fuel from a single at-reactor storage facility to a repository would be small.

Radiological impacts may accumulate along the transportation route for an away-from-reactor ISFSI because the same overall transportation route would be used to transfer the entire inventory of spent fuel from an away-from-reactor ISFSI to a repository. To evaluate these impacts from an away-from-reactor ISFSI, the NRC reviewed other past evaluations of transportation of spent fuel from an away-from-reactor ISFSI to a repository. For example, the NRC previously evaluated the radiological and nonradiological impacts from a comparable (full inventory) transportation scenario for PFSF and concluded that the impacts would be SMALL (NRC 2001a). That analysis calculated incident-free and accident risks from 4,000 shipments of spent fuel from Maine to Utah over a 20-year period. The resulting cumulative dose to the maximally exposed individual (an individual that is assumed for the purpose of performing a bounding analysis of incident-free transportation to be exposed to the radiation from all shipments) at the end of the 20-year period was 0.022 mSv (2.2 mrem). For comparison, the annual NRC public dose limit in 10 CFR Part 20 is 1 mSv (100 mrem). The NRC (2001a) also concluded that the radiological impacts from transportation of a single reactor's spent fuel from an away-from-reactor ISFSI to a repository would be bounded by, or comparable to, impacts evaluated in Table S–4 in 10 CFR 51.52. Based on these analyses, the NRC concludes that the additional accumulated impacts from transportation of the entire inventory of spent fuel from an away-from-reactor ISFSI to a repository would be minor.

6.4.15.3 Conclusion

Cumulative impacts on transportation include the incremental effects from continued storage when added to the aggregate effects of other past, present, and reasonably foreseeable future actions. As described in Sections 4.16 and 5.16, the incremental impacts from continued storage on transportation is SMALL for all timeframes at an at-reactor ISFSI and SMALL to MODERATE for all timeframes at an away-from-reactor ISFSI. In addition, past, present, and reasonably foreseeable activities take place in the geographic area of interest that could contribute to cumulative effects to transportation. The cumulative impacts from continued storage when added to other past, present, and reasonably foreseeable Federal and non-Federal activities (such as construction of energy, water, military, or urbanization projects) would range from SMALL to MODERATE for nonradiological transportation and SMALL for radiological transportation.

6.4.16 Public and Occupational Health

This section evaluates the effects of continued storage on public and occupational health when added to the aggregate effects of other past, present, and reasonably foreseeable future actions. As described in Sections 4.17 and 5.17, the incremental impacts from continued

storage on public and occupational health are SMALL for all timeframes at both at-reactor and away-from-reactor storage facilities.

For this analysis, the geographic area considered in the cumulative public and occupational health resources analysis is the area within an 80-km (50-mi) radius of the at-reactor or away-from-reactor storage facility site. Historically, the NRC has used the 80-km (50-mi) radius as a standard geographic area to evaluate population doses from routine releases from nuclear power plants. The 80-km (50-mi) radius was selected to encompass potential impact overlaps from two or more nuclear facilities. This concept is discussed in detail in the site-specific EISs for new reactors and ISFSI EAs or EISs reviewed for this GEIS analysis (see e.g., NRC 2011d, Section 6.8).

6.4.16.1 Potential Cumulative Impacts from General Trends and Activities

Cumulative human health impacts relate to public exposure to radiological, chemical, and microbiological hazards and the potentially chronic effects of electromagnetic field (EMF) exposure. Public exposures may occur as a result of environmental accumulations of harmful constituents released from various facilities associated with urban, agricultural, industrial, and commercial development. The potential cumulative impacts of EMF exposure, while uncertain, would relate to activities (e.g., transmission lines and substations) associated with urban, industrial, and commercial development. The NRC acknowledges that there is no conclusive link between EMF exposure and human health impacts (NRC 2013a).

The magnitude of cumulative impacts resulting from general trends taking place within the region in which a storage facility is located would depend on the nature and location of the actions, the number of actions (facilities or projects), the level of the public's exposure, and whether facilities comply with regulating agency requirements (e.g., permitted discharge limits). For public and occupational health, the cumulative impact would be minimal (e.g., NRC 2011a–e, 2012a, 2013a–c) because reactors and other industrial buildings would be required to meet regulations such as the Occupational Safety and Health Administration's General Industry Standards (29 CFR Part 1910) and Construction Industry Standards (29 CFR Part 1926) and, as applicable, operated under NRC regulations such as 10 CFR Part 72 and 10 CFR Part 20. For example, even though increased urbanization might suggest an increased public exposure because of a larger receptor group, the NRC would still require the regulated nuclear facilities in the area of interest to prove through monitoring and as low as is reasonably achievable (ALARA) programs that they were meeting the public and occupational health regulations.

6.4.16.2 Potential Cumulative Impacts from Other NRC-Regulated or Spent Fuel-Related Activities

Cumulative impacts on public and occupational health could result from other NRC-regulated or spent fuel-related activities, such as reactor plant shutdown activities prior to decommissioning, decommissioning activities, construction of infrastructure to support away-from-reactor ISFSIs, and preparation activities to enable transportation of waste to a repository. The NRC has evaluated environmental impacts from these activities in the Decommissioning GEIS (NRC 2002) for reactor decommissioning and the PFSF EIS (NRC 2001a) for ISFSI decommissioning and found the public and occupational health impacts to be SMALL. The NRC also evaluated environmental impacts from infrastructure to support away-from-reactor ISFSIs in the PFSF EIS (NRC 2001a) and found the public and occupational health impacts to be SMALL. For activities related to spent fuel transportation to a repository, such as spent fuel storage maintenance activities that involve bare fuel handling in a postulated DTS at nearby facilities, as noted in Sections 4.17 and 5.17, the public and occupational health impacts would be SMALL and would not aggregate to more significant impacts, given the limited number of facilities within 80 km (50 mi) expected to be in the decommissioning phase of their lifecycle.

6.4.16.3 Conclusion

Cumulative impacts on public and occupational health include the incremental effects from continued storage when added to the aggregate effects of other past, present, and reasonably foreseeable future actions. As described in Sections 4.17 and 5.17, the incremental impacts from continued storage on public and occupational health is SMALL for all timeframes at both at-reactor and away-from-reactor storage facilities. The cumulative impacts from continued storage when added to other past, present, and reasonably foreseeable Federal and non-Federal activities are expected to be SMALL because storage facilities, reactors, and other proposed industrial buildings would be required to meet regulations such as the Occupational Safety and Health Administration's General Industry Standards (29 CFR Part 1910) and Construction Industry Standards (29 CFR Part 1926) and, as applicable, operated under NRC regulations such as 10 CFR Part 72 and 10 CFR Part 20.

6.4.17 Environmental Impacts of Postulated Accidents

This section evaluates the effects of continued storage on accident risk when added to the aggregate effects of other past, present, and reasonably foreseeable future actions. As described in Sections 4.18 and 5.18, the incremental impacts from continued storage on environmental impacts of postulated accidents is SMALL for all timeframes at both at-reactor and away-from-reactor storage facilities.

The geographic area considered in the cumulative accident risk assessment is an 80-km (50-mi) radius from an at-reactor or away-from-reactor storage facility. The cumulative analysis

considers risk from potential accidents from other nuclear plants or storage facilities that have the potential to increase risks at any location within 80 km (50 mi) of the shutdown reactor or storage facility. It is possible that one or more other types of nuclear facilities that support the nuclear fuel cycle may be located within an 80-km (50-mi) radius, but these facilities generally involve very low accident risk (51 FR 30028). Therefore, the analysis below focuses on the cumulative risk from reactors and storage facilities.

6.4.17.1 Potential Cumulative Impacts from General Trends and Activities

Based on a review of the other activities that can occur near proposed new at-reactor storage facilities, there are two scales of cumulative impacts on accident risk, including (1) cumulative impacts due to the various impacts from an individual power plant and storage facility over time (e.g., annual design basis and severe accident risks at a reactor), and (2) cumulative impacts due to closely sited operating or decommissioning reactors (e.g., design basis and severe accident risks at other reactors located within 80 km [50-mi]) or other radioactive facilities. In addition, climate change can impact accident risk due to higher or lower intensity or frequency of natural phenomena hazards (e.g., precipitation, tornadoes, hurricanes) that could result in radiological accidents.

The magnitude of cumulative accident impacts resulting from all general trends taking place within the 80-km (50-mi) region of a power plant and storage facility would likely be limited because:

1. Estimates of average individual early fatality and latent cancer fatality risks are well below the Commission's safety goals at all plants (51 FR 30028).
2. The Commission has determined that the probability-weighted consequences of severe accidents of a nuclear power plant are SMALL (10 CFR Part 51, Appendix B, Table B-1).
3. The severe accident risk due to any particular nuclear power plant gets smaller as the distance from that plant increases. However, the combined risk at any location within 80 km (50 mi) of a reactor site would be bounded by the sum of risks for all of these operating and proposed nuclear power plants. Even though several plants and other nuclear facilities could potentially be included in the combination, this combined risk would still be low.

Because design basis accidents at nearby power plants and storage facilities are individually unlikely to occur more than once over the life of a facility, and licensees must show that accident consequences of design basis accidents are mitigated to acceptable levels of dose offsite, the cumulative impact of design basis accidents is very small. Based on the above discussion, the NRC concluded that, in all new reactor EISs published through February 2013 (e.g., NRC 2011a–e, 2013c), the cumulative risks from design basis and severe accidents at any location within 80 km (50 mi) of a reactor would be SMALL.

Potential cumulative impacts from an at-reactor ISFSI or an away-from-reactor ISFSI would be minimal because of passive nature of the ISFSI; there is no routine release of gaseous or liquid radiological effluents during operation. In addition, because licensees are required to maintain doses as low as is reasonably achievable in accordance with NRC radiation protection regulations, both an ISFSI and an away-from-reactor facility are designed to minimize radiological doses to workers and public. Additionally, the severe accident risk from a spent fuel storage facility also decreases as the distance from that facility increases. On this basis, the NRC concluded that the cumulative risk of continued storage from design basis and severe accidents at an ISFSI or an away-from-reactor storage facility would be SMALL.

6.4.17.2 Potential Cumulative Impacts from Other NRC-Regulated or Spent Fuel-Related Activities

Cumulative impacts of postulated accidents could result from other NRC-regulated or spent fuel-related activities, such as spent fuel storage maintenance activities. Activities that involve bare fuel handling in a postulated dry transfer facility at nearby facilities could involve additional accident risk. However, as noted in Sections 4.18 and 5.18, these impacts would be SMALL, and would not aggregate to more significant impacts, given the limited number of facilities within 80 km (50 mi) expected to be in this part of their life cycle.

Before spent fuel storage facilities can begin final decommissioning and license termination, the spent fuel must be removed from the site and stored or disposed of offsite. Once the spent fuel is removed from the site, the residual radioactive material at a reactor poses very little accident risk. Therefore, impacts on accident risk from decommissioning are expected to be SMALL (NRC 2002).

6.4.17.3 Conclusion

Cumulative impacts of postulated accidents include the incremental effects from continued storage when added to the aggregate effects of other past, present, and reasonably foreseeable future actions. As described in Sections 4.18 and 5.18, the incremental impacts from continued storage on environmental impacts of postulated accidents is SMALL for all timeframes at both at-reactor and away-from-reactor storage facilities. In addition, past, present, and reasonably foreseeable activities take place in the geographic area of interest that could contribute to cumulative effects to accident risk.

The NRC determined that the cumulative impacts from a reactor, a spent fuel pool, and an ISFSI would be minimal because accident risk remains SMALL. The cumulative impacts from other past, present, and reasonably foreseeable Federal and non-Federal activities described in Sections 6.3.1 and 6.3.2 are SMALL. Given that estimates of average individual early fatality and latent cancer fatality risks are well below the Commission's safety goals at all nuclear power plants (51 FR 30028), the Commission determination that the probability-weighted

consequences of severe accidents of a nuclear power plant are SMALL (10 CFR Part 51, Appendix B, Table B-1), and that the combined risk from several plants and other nuclear facilities would be low, the NRC concludes that the cumulative impacts at all storage sites would be SMALL.

6.5 Summary

The impact levels determined by the NRC in the previous chapters from at-reactor storage (Chapter 4), away-from-reactor storage (Chapter 5), and cumulative impacts from continued storage when added to other past, present, and reasonably foreseeable activities (Chapter 6) are summarized in Table 6-4. The impact levels are denoted as SMALL, MODERATE, and LARGE as a measure of their expected adverse environmental impacts. For some resource areas, the impact determination language is specific to the authorizing regulation, executive order, or guidance. Impact determinations that include a range of impacts reflect uncertainty related to both geographic variability and the temporal scale of the analysis. As a result, based on analyses performed in this GEIS, the NRC expects that further site-specific analysis would be unlikely to result in impact conclusions with different ranges.

Table 6-4. Summary of the Cumulative Impacts from Continued Storage When Added to Other Federal and Non-Federal Activities

Resource Area	Incremental Impact from At-Reactor Storage	Incremental Impact from Away-From-Reactor Storage	Cumulative Impact from Continued Storage and other Federal and Non-Federal Activities
Land Use	SMALL	SMALL	SMALL to MODERATE
Socioeconomics	SMALL	SMALL (adverse) to LARGE (beneficial)	SMALL to LARGE
Environmental Justice	Disproportionately high and adverse impacts are not expected		
Air Quality	SMALL	SMALL to MODERATE	SMALL to MODERATE
Climate Change	SMALL	SMALL	MODERATE
Geology and Soils	SMALL	SMALL	SMALL to MODERATE
Surface-Water Quality and Use	SMALL	SMALL	SMALL to LARGE
Groundwater Quality and Use	SMALL	SMALL	SMALL to LARGE
Terrestrial Resources[(a)]	SMALL	SMALL to MODERATE	SMALL to MODERATE
Aquatic Ecology[(a)]	SMALL	SMALL	SMALL to LARGE
Historic and Cultural Resources	SMALL to LARGE	SMALL to LARGE	SMALL to LARGE
Noise	SMALL	SMALL	SMALL to MODERATE
Aesthetics	SMALL	SMALL to MODERATE	SMALL to MODERATE
Waste Management	SMALL to MODERATE	SMALL to MODERATE	SMALL to LARGE

Table 6-4. Summary of the Cumulative Impacts from Continued Storage When Added to Other Federal and Non-Federal Activities (cont'd)

Resource Area	Incremental Impact from At-Reactor Storage	Incremental Impact from Away-From-Reactor Storage	Cumulative Impact from Continued Storage and other Federal and Non-Federal Activities
Transportation	SMALL	SMALL to MODERATE	SMALL to MODERATE
Public and Occupational Health	SMALL	SMALL	SMALL
Accidents	SMALL	SMALL	SMALL

(a) Cumulative impacts for Federally listed threatened and endangered species and Essential Fish Habitat would be determined as part of consultations for the Endangered Species Act and the Magnuson–Stevens Fishery Conservation and Management Act.

6.6 References

10 CFR Part 20. *Code of Federal Regulations*, Title 10, *Energy*, Part 20, "Standards for Protection Against Radiation." Washington, D.C.

10 CFR Part 50. *Code of Federal Regulations*, Title 10, *Energy,* Part 50, "Domestic Licensing of Production and Utilization Facilities." Washington, D.C.

10 CFR Part 51. *Code of Federal Regulations*, Title 10, *Energy*, Part 51, "Environmental Protection Regulations for Domestic Licensing and Related Regulatory Functions." Washington, D.C.

10 CFR Part 52. *Code of Federal Regulations*, Title 10, *Energy,* Part 52, "Licenses, Certifications, and Approvals for Nuclear Power Plants." Washington, D.C.

10 CFR Part 71. *Code of Federal Regulations*, Title 10, *Energy*, Part 71, "Packaging and Transportation of Radioactive Material." Washington, D.C.

10 CFR Part 72. *Code of Federal Regulations*, Title 10, *Energy,* Part 72, "Licensing Requirements for the Independent Storage of Spent Nuclear Fuel, High-Level Radioactive Waste, and Reactor-Related Greater Than Class C Waste." Washington, D.C.

29 CFR Part 1910. *Code of Federal Regulations*, Title 29, *Standards*, Part 1910, "Occupational Safety and Health Standards." Washington, D.C.

29 CFR Part 1926. *Code of Federal Regulations*, Title 29, *Standards*, Part 1926, "Safety and Health Regulations for Construction." Washington, D.C.

40 CFR Part 1508. *Code of Federal Regulations*, Title 40, *Protection of Environment*, Part 1508, "Terminology and Index." Washington, D.C.

49 CFR Parts 171–180. *Code of Federal Regulations*, Title 49, *Transportation*, Parts 171−180, "Hazardous Materials Regulations." Washington, D.C.

50 CFR Part 402. *Code of Federal Regulations*, Title 50, *Wildlife and Fisheries,* Part 402, "Interagency Cooperation—Endangered Species Act of 1973, as Amended." Washington, D.C.

51 FR 30028. August 21, 1986. "Safety Goals for the Operations of Nuclear Power Plants; Policy Statement; Republication." *Federal Register*, U.S. Nuclear Regulatory Commission, Washington, D.C.

69 FR 52040. August 24, 2004. "Policy Statement on the Treatment of Environmental Justice Matters in NRC Regulatory and Licensing Actions." *Federal Register*, U.S. Nuclear Regulatory Commission, Washington, D.C.

74 FR 66496. December 15, 2009. "Endangerment and Cause or Contribute Findings for Greenhouse Gases Under Section 202(a) of the Clean Air Act." *Federal Register*, U.S. Environmental Protection Agency, Washington, D.C.

75 FR 31514. June 3, 2010. "Prevention of Significant Deterioration and Title V Greenhouse Gas Tailoring Rule." *Federal Register*, U.S. Environmental Protection Agency, Washington, D.C.

78 FR 19537. April 1, 2013. "SHINE Medical Technologies, Inc.; Exemption." *Federal Register*, U.S. Nuclear Regulatory Commission, Washington, D.C.

78 FR 21919. April 12, 2013. "Finding of No Significant Impact and Final Programmatic Environmental Assessment for Army 2020 Force Structure Realignment." *Federal Register*, U.S. Department of the Army, Washington, D.C.

AEC (U.S. Atomic Energy Commission). 1972. *Environmental Survey of Transportation of Radioactive Materials to and From Nuclear Power Plants*. WASH–1238, Washington, D.C. Available at http://www.osti.gov/energycitations/product.biblio.jsp?osti_id=4569134.

BRC (Blue Ribbon Commission on America's Nuclear Future). 2012. "Report to the Secretary of Energy." Washington, D.C. Accession No. ML120970375.

Clean Water Act (See Federal Water Pollution Control Act of 1972).

CEQ (Council on Environmental Quality). 1997. *Considering Cumulative Effects under the National Environmental Policy Act*. Washington, D.C. Accession No. ML12243A349.

CEQ (Council on Environmental Quality). 2003. *The NEPA Task Force Report to the Council on Environmental Quality—Modernizing NEPA Implementation.* Washington, D.C. Accession No. ML100840639.

CEQ (Council on Environmental Quality). 2010. *Draft NEPA Guidance on Consideration of the Effects of Climate Change and Greenhouse Gas Emissions*. Washington, D.C. Accession No. ML12221A314.

CYAPC (Connecticut Yankee Atomic Power Company). 2012. *Haddam Neck Plant Independent Spent Fuel Storage Installation Decommissioning Study*. East Hampton, Connecticut. Accession No. ML123630241.

DOE (U.S. Department of Energy). 1996. *Dry Transfer System Topical Safety Analysis Report.* Volume 1, Washington, D.C. Accession No. ML052220472.

DOE (U.S. Department of Energy). 2008. *Final Supplemental Environmental Impact Statement for a Geologic Repository for the Disposal of Spent Nuclear Fuel and High-Level Radioactive Waste at Yucca Mountain, Nye County, Nevada*. DOE EIS–0250F–S1, Office of Civilian Radioactive Waste Management, Las Vegas, Nevada. Accession No. ML081750212.

DOE (U.S. Department of Energy). 2013. *Strategy for the Management and Disposal of Used Nuclear Fuel and High-Level Radioactive Waste*. Washington, D.C. Accession No. ML13011A138.

Endangered Species Act of 1973 (ESA), as amended. 16 USC 1531 *et seq*.

EIA (Energy Information Administration). 2011. *Electric Power Annual 2010*. Washington, D.C. Available at http://www.eia.gov/electricity/annual/archive/03482010.pdf.

EIA (Energy Information Administration). 2012a. *Annual Energy Outlook 2013 Early Release Overview*. Washington, D.C. Available at http://www.eia.gov/forecasts/archive/aeo13/er/.

EIA (Energy Information Administration). 2012b. *Annual Energy Outlook 2012 With Projections to 2035*. DOE/EIA-0383(2012), Washington, D.C. Available at http://www.eia.gov/forecasts/aeo/pdf/0383(2012).pdf.

EIA (Energy Information Administration). 2012c. *Number and Capacity of Petroleum Refineries*. Washington, D.C. Available at http://www.eia.gov/dnav/pet/pet_pnp_cap1_dcu_nus_a.htm.

EIA (Energy Information Administration). 2012d. *2011 Uranium Marketing Annual Report*. Washington, D.C. Available at http://www.eia.gov/uranium/marketing/pdf/2011umar.pdf.

EPA (U.S. Environmental Protection Agency). 1999. *Consideration of Cumulative Impacts in EPA Review of NEPA Documents*. EPA 315–R–99–002, Washington, D.C. Accession No. ML040081036.

EPA (U.S. Environmental Protection Agency). 2013a. *Inventory of U.S. Greenhouse Gas Emissions and Sinks: 1990–2011*. EPA 430-R-13-001, Washington, D.C. Accession No. ML13331A473.

EPA (U.S. Environmental Protection Agency). 2013b. *Clean Energy: Calculations and References*. Washington, D.C. Accession No. ML13205A377.

EREF (Environmental Research and Education Foundation). 1999. *Lifecycle Inventory of a Modern Municipal Solid Waste Landfill.* Washington, D.C. Available at http://erefdn.org/publications/uploads/LifeCycleInvRep.pdf.

Federal Water Pollution Control Act of 1972, as amended (also referred to as the Clean Water Act). 33 USC 1251 *et seq.*

GCRP (U.S. Global Change Research Program). 2014. *Highlights of Climate Change Impacts in the United States: The Third National Climate Assessment*. J.M. Melillo, T.C. Richmond, and G.W. Yohe, eds. U.S. Government Printing Office, Washington, D.C. Accession No. ML14129A233.

INGAA (Interstate Natural Gas Association of America). 2011. *North American Midstream Infrastructure Through 2035*—A Secure Energy Future. Washington, D.C. Available at http://www.ingaa.org/File.aspx?id=14900.

Magnuson–Stevens Fishery Conservation and Management Act of 1976, as amended. 16 USC 1801 *et seq*.

MYAPC (Maine Yankee Atomic Power Company). 2013. *Maine Yankee Independent Spent Fuel Storage Installation Decommissioning Funding Plan*. Wiscasset, Maine. Accession No. ML130460347.

National Environmental Policy Act of 1969 (NEPA), as amended. USC 4321 *et seq*.

National Historic Preservation Act (NHPA), as amended. 16 USC 470 *et seq*.

National Research Council. 2009. *Driving and the Built Environment: The Effects of Compact Development on Motorized Travel, Energy Use, and CO_2 Emissions*. Special Report 298, Washington, D.C. Available at http://onlinepubs.trb.org/Onlinepubs/sr/sr298.pdf.

NPC (National Petroleum Council). 2007. *Topic Paper #16: Refining and Manufacturing*. Washington, D.C. Available at http://www.npc.org/Study_Topic_Papers/16-STG-RefiningManu.pdf.

NPC (National Petroleum Council). 2011. *Paper #1.9: Natural Gas Infrastructure*. Washington, D.C.

NPSCC (National Parks Second Century Commission). 2009. *Advancing the National Park Idea: National Parks Second Century Commission Report*. Washington, D.C. Available at http://www.npca.org/assets/pdf/Commission_Report.PDF.

NRC (U.S. Nuclear Regulatory Commission). 1977. *Final Environmental Statement on Transportation of Radioactive Material by Air and Other Modes*. NUREG−0170, Volume 1, Washington, D.C. Accession Nos. ML022590265, ML022590348.

NRC (U.S. Nuclear Regulatory Commission). 2000. *Consolidated Guidance About Materials Licenses: Guidance About Administrative Licensing Procedures*. NUREG−1556, Volume 20, Washington, D.C. Accession No. ML022830863.

NRC (U.S. Nuclear Regulatory Commission). 2001a. *Final Environmental Impact Statement for the Construction and Operation of an Independent Spent Fuel Storage Installation on the Reservation of the Skull Valley Band of Goshute Indians and the Related Transportation Facility in Tooele County, Utah*. NUREG−1714, Volume 1, Washington, D.C. Accession No. ML020150170.

NRC (U.S. Nuclear Regulatory Commission). 2001b. *Technical Study of Spent Nuclear Fuel Pool Accident Risk at Decommissioning Nuclear Power Plants.* NUREG−1738, Washington, D.C. Accession No. ML010430066.

NRC (U.S. Nuclear Regulatory Commission). 2002. *Final Generic Environmental Impact Statement on Decommissioning of Nuclear Facilities, Supplement 1 Regarding the Decommissioning of Nuclear Power Reactors*. NUREG−0586, Volume 1, Washington, D.C. Accession Nos. ML023470327, ML023500228.

NRC (U.S. Nuclear Regulatory Commission). 2003. *Environmental Assessment Related to the Construction and Operation of the Diablo Canyon Independent Spent Fuel Storage Installation*. Washington, D.C. Accession No. ML032970370.

NRC (U.S. Nuclear Regulatory Commission). 2005a. *Environmental Assessment Related to the Renewal of the License for the Surry Independent Spent Fuel Storage Installation*. Washington, D.C. Accession No. ML040560238.

NRC (U.S. Nuclear Regulatory Commission). 2005b. *Environmental Assessment Related to the Renewal of the H.B. Robinson Steam Electric Plant, Unit No. 2 Independent Spent Fuel Storage Installation License Special Nuclear Materials License No. SNM–2502*. Washington, D.C. Accession No. ML050700137.

NRC (U.S. Nuclear Regulatory Commission). 2005c. *Environmental Assessment Related to the Construction and Operation of the Humboldt Bay Independent Spent Fuel Storage Installation*. Washington, D.C. Accession No. ML052430106.

NRC (U.S. Nuclear Regulatory Commission). 2005d. *Generic Environmental Impact Statement for License Renewal of Nuclear Plants, Supplement 23 Regarding Point Beach Nuclear Plant Units 1 and 2*. NUREG−1437, Supplement 23, Washington, D.C. Accession No. ML052230490.

NRC (U.S. Nuclear Regulatory Commission). 2006. *Final Environmental Statement for an Early Site Permit (ESP) at the North Anna ESP Site*. NUREG−1811, Volume 1, Washington, D.C. Accession No. ML063470330.

NRC (U.S. Nuclear Regulatory Commission). 2008. *Final Environmental Statement for an Early Site Permit (ESP) at the Vogtle Electric Generating Plant Site*. NUREG−1872, Volume 1, Washington, D.C. Accession No. ML082240145.

NRC (U.S. Nuclear Regulatory Commission). 2009. *Environmental Assessment for the Renewal of U.S. Nuclear Regulatory Commission License No. SNM–2503 for Oconee Nuclear Power Station Independent Spent Fuel Storage Installation*. Washington, D.C. Accession No. ML091340557.

NRC (U.S. Nuclear Regulatory Commission). 2011a. *Final Environmental Impact Statement for Combined Licenses (COLs) for South Texas Project Electric Generating Station Units 3 and 4*. NUREG−1937, Washington, D.C. Accession No. ML11049A000.

NRC (U.S. Nuclear Regulatory Commission). 2011b. *Final Supplemental Environmental Impact Statement for Combined Licenses (COLs) for Vogtle Electric Generating Plant Units 3 and 4*. NUREG−1947, Washington, D.C. Accession No. ML11076A010.

NRC (U.S. Nuclear Regulatory Commission). 2011c. *Final Environmental Impact Statement for Combined Licenses (COLs) for Virgil C. Summer Nuclear Station, Units 2 and 3*. NUREG−1939, Volumes 1 and 2, Washington, D.C. Accession Nos. ML11098A044, ML11098A057.

NRC (U.S. Nuclear Regulatory Commission). 2011d. *Final Environmental Impact Statement for Combined Licenses for Calvert Cliffs Nuclear Power Plant Unit 3.* NUREG−1936, Volumes 1 and 2, Washington, D.C. Accession Nos. ML11129A167, ML11129A179.

NRC (U.S. Nuclear Regulatory Commission). 2011e. *Final Environmental Impact Statement for Combined Licenses for Comanche Peak Nuclear Power Plant Units 3 and 4*. NUREG−1943, Volumes 1 and 2, Washington, D.C. Accession Nos. ML11131A001, ML11131A002.

NRC (U.S. Nuclear Regulatory Commission). 2011f. *Generic Environmental Impact Statement for License Renewal of Nuclear Plants, Supplement 44 Regarding Crystal River Unit 3 Nuclear Generating Plant—Draft Report for Comment*. NUREG−1437, Supplement 44, Washington, D.C. Accession No. ML11139A153.

NRC (U.S. Nuclear Regulatory Commission). 2011g. *Generic Environmental Impact Statement for License Renewal of Nuclear Plants, Supplement 46 Regarding Seabrook Station—Draft Report for Comment*. NUREG–1437, Supplement 46, Washington, D.C. Accession No. ML11213A080.

NRC (U.S. Nuclear Regulatory Commission). 2012a. *Final Environmental Impact Statement for Combined Licenses for Levy Nuclear Plant Units 1 and 2*. NUREG−1941, Volumes 1 and 2, Washington, D.C. Accession Nos. ML12100A063, ML12320A105.

NRC (U.S. Nuclear Regulatory Commission). 2012b. *Environmental Assessment for the Proposed Renewal of U.S. Nuclear Regulatory Commission License No. SNM–2505 for Calvert Cliffs Nuclear Power Plant, LLC's Independent Spent Fuel Storage Installation*. Washington, D.C. Accession No. ML121220084.

NRC (U.S. Nuclear Regulatory Commission). 2012c. *Generic Environmental Impact Statement for License Renewal of Nuclear Plants, Supplement 47 Regarding Columbia Generating Station*. NUREG–1437, Supplement 47, Washington, D.C. Accession No. ML12096A334.

NRC (U.S. Nuclear Regulatory Commission). 2013a. *Generic Environmental Impact Statement for License Renewal of Nuclear Plants*. NUREG−1437, Revision 1, Washington, D.C. Accession No. ML13107A023.

NRC (U.S. Nuclear Regulatory Commission). 2013b. *Environmental Impact Statement for the Combined License (COL) for Enrico Fermi Unit.* NUREG−2105, Volumes 1 and 2, Washington, D.C. Accession Nos. ML12307A172, ML12307A176.

NRC (U.S. Nuclear Regulatory Commission). 2013c. *Final Environmental Impact Statement for Combined Licenses for William States Lee III Nuclear Station Units 1 and 2*. NUREG−2111, Volumes 1 and 2, Washington, D.C. Accession Nos. ML13340A005, ML13340A006, ML13340A007.

NRC (U.S. Nuclear Regulatory Commission). 2013d. *Spent Fuel Storage in Pools and Dry Casks Key Points and Questions and Answers*. Washington, D.C. Accession No. ML120970230.

NRC (U.S. Nuclear Regulatory Commission). 2013e. *2013–2014 Information Digest.* NUREG–1350, Volume 25, Washington, D.C. Available at http://www.nrc.gov/reading-rm/doc-collections/nuregs/staff/sr1350/v25/sr1350v25.pdf.

NRC (U.S. Nuclear Regulatory Commission). 2013f. *Attachment 1—Staff Guidance for Greenhouse Gas and Climate Change Impacts for New Reactor Environmental Impact Statements*. COL/ESP-ISG-026, Washington, D.C. Accession No. ML12326A811.

NRC (U.S. Nuclear Regulatory Commission). 2014. *Spent Fuel Transportation Risk Assessment Final Report*. NUREG–2125, Washington, D.C. Accession No. ML14031A323.

Nuclear Waste Policy Act of 1982 (NWPA), as amended. 42 USC 10101, *et seq*.

Pitkin, J. and D. Myers. 2008. *U.S. Housing Trends: Generational Changes and the Outlook to 2050.* Special Report 298, National Research Council, Washington, D.C. Available at http://onlinepubs.trb.org/Onlinepubs/sr/sr298pitkin-myers.pdf.

Sprung, J.L., D.J. Ammerman, N.L. Breivik, R.J. Dukart, F.L. Kanipe, J.A. Koski, G.S. Mills, K.S. Neuhauser, H.D. Radloff, R.F. Weiner, and H.R. Yoshimura. 2000. *Reexamination of Spent Fuel Shipment Risk Estimates*. NUREG/CR–6672, Sandia National Laboratory, Albuquerque, New Mexico. Accession No. ML003698324.

Texas Water Development Board. 2012. *Water for Texas: 2012 State Water Plan*. Austin, Texas. Available at http://www.twdb.state.tx.us/publications/state_water_plan/2012/2012_SWP.pdf.

USACE (U.S. Army Corps of Engineers). 2006. *U.S. Water Demand, Supply, and Allocation: Trends and Outlook*. Report 2007–R–3, Washington, D.C. Available at http://www.iwr.usace.army.mil/Portals/70/docs/iwrreports/2007-R-03.pdf.

USCB (U.S. Census Bureau). 2012. *Population Projections*. Washington, D.C. Available at http://www.census.gov/population/projections/.

USDA (U.S. Department of Agriculture). 2012. *USDA Agricultural Projections to 2021*. Long-Term Projections Report OCE–2012–1, Washington, D.C. Available at http://www.usda.gov/oce/commodity/archive_projections/USDAAgriculturalProjections2021.pdf.

YAEC (Yankee Atomic Electric Company). 2012. *Decommissioning Study of the Yankee Rowe Independent Spent Fuel Storage Installation*. Rowe, Massachusetts. Accession No. ML12363A107.

7.0 Cost-Benefit Analysis

In this chapter, the U.S. Nuclear Regulatory Commission (NRC) analyzes and compares the benefits and costs associated with the proposed action and the benefits and costs of NRC's potential options in case of no action ("options"). This chapter, along with the rest of this *Generic Environmental Impact Statement for Continued Storage of Spent Nuclear Fuel* (GEIS), informs the NRC's decision regarding whether to implement the proposed action. Only the proposed action—the adoption of a revision to 10 CFR 51.23 to codify the analysis in the GEIS of the environmental impacts of continued storage of spent fuel—satisfies the purpose for the proposed action, which is to preserve the efficiency of the NRC's licensing processes with regard to the environmental impacts of continued storage. Nonetheless, as discussed in Section 1.6.1 of this GEIS, the NRC has multiple options that it could implement if it chose not to adopt a revision to 10 CFR 51.23 to codify the analysis in the GEIS of the environmental impacts of continued storage of spent fuel.

In Chapters 4 and 5 of this GEIS, the NRC discusses the potential impacts of continued at-reactor and away-from-reactor storage, respectively, that may occur under three different continued-storage timeframes. In Chapter 6, the NRC addresses the potential cumulative impacts of continued storage. The proposed action and the NRC's options in case of no action do not alter the NRC's assessment of environmental impacts from continued storage that the NRC addressed in Chapters 4, 5, and 6. The proposed action and the options considered in this chapter instead provide different approaches that the NRC could apply to future licensing activities that can satisfy the need for the proposed action: they provide processes for use in NRC licensing to address the environmental impacts of continued storage. As a result, the costs and benefits shown in this chapter include the specific costs and benefits of the proposed action and NRC's options in case of no action. The costs and benefits do not include the environmental impacts of continued storage, an activity that may occur regardless of the process that the NRC selects to consider the environmental impacts of continued storage. In addition, the costs and benefits addressed in this chapter do not include the potential financial costs of continued storage, which the NRC addresses throughout Chapter 2.

Section 7.1 of this chapter contains the assumptions underlying the NRC's cost-benefit analysis. Section 7.2 contains the costs and benefits of the proposed action (described in Section 1.4), while Section 7.3 contains the costs and benefits of the site-specific review option (described in Section 1.6.1.1). Section 7.4 contains the costs and benefits of the GEIS-only option (described in Section 1.6.1.2), and Section 7.5 contains the costs and benefits of the policy-statement option (described in Section 1.6.1.3). Finally, Section 7.6 contains a summary and comparison of these costs and benefits. Additional details about the NRC's estimated cost calculations are available in Appendix H, Estimated Cost of Alternatives.

7.1 Assumptions

Throughout this chapter, the NRC projects the estimated costs and benefits of various ways the agency can consider the environmental impacts of continued storage. To the extent that the NRC considers cost information, the NRC presents figures in constant 2014 dollars and by applying 3 percent and 7 percent discount rates, as provided in Office of Management and Budget (OMB) Circular A–4 (OMB 2003) and NUREG/BR−0058, Revision 4, *Regulatory Analysis Guidelines for the U.S. Nuclear Regulatory Commission* (NRC 2004).[1]

In this analysis, the NRC projects the costs of future environmental reviews conducted from fiscal year 2015 (October 2014 through September 2015) through fiscal year 2044 (October 2043 through September 2044). The NRC adopted this 30-year time period based on the example provided in OMB Circular A–4 and based on the approximate cumulative time period for which previous versions of the Waste Confidence rule (Title 10 of the *Code of Federal Regulations* Section 51.23 [10 CFR 51.23]) have existed. The 30-year time period allows the NRC to make meaningful comparisons between the proposed action and the NRC's options in case of no action. The 30-year time period begins in the month after the rulemaking is currently scheduled for completion.

In contrast, the NRC estimates the costs of GEIS development and rulemaking activities that occur in fiscal years 2013 and 2014 because that is when the NRC incurred those costs. As a result, these costs are technically past, or "sunk" costs, but the NRC discloses them in its analysis to provide a complete and transparent analysis of the costs of the proposed action and NRC's potential options in case of no action. In the absence of this cost information, the

[1] The estimated costs provided in this chapter differ from those provided in Chapter 7 of the draft GEIS for several reasons. First, the NRC has updated costs in this chapter to reflect the agency's latest full-time equivalent (FTE) cost estimate, which is 4 percent lower than the 2012 estimate used to calculate staff costs for the draft GEIS. In addition, where applicable, the NRC has adjusted costs incurred in 2013 to 2014 dollars using the same formula presented in Chapter 2 (this effect tends to be relatively minor and affects only the GEIS and rulemaking costs incurred in 2013). In addition, all future costs are different because the baseline year is now 2014 instead of 2013, which was used in the draft. As a result, there is one less year of discounting. Finally, site-specific review costs for two new reactor applications are higher than they were in the draft GEIS because the NRC now estimates that environmental impact statements (EISs) for these two reviews would require supplementation if the NRC decides to pursue one of the no-action options. The combined effect of these differences is that the costs of the NRC's options in the case of no action are higher than they were in the draft GEIS because the increased costs of new reactor reviews plus the loss of one year of discounting is larger than the effect of the NRC's lower FTE rates. At the same time, the cost of the proposed action is lower in the constant-dollars and 3 percent discounting cases than it was for the same cases in the draft GEIS because the effect of the reduced FTE rate is larger than the effects of lost discounting and the Consumer Price Index (CPI) adjustment; however, in the 7 percent discounting case the cost of the proposed action is higher than it was in the draft GEIS because the lost discounting plus the CPI adjustment has a larger effect than the NRC's reduced FTE rates.

proposed action would appear to have no costs, and the GEIS-only and policy-statement options would entail fewer costs. Because approximately half of the costs of the GEIS development and rulemaking are estimated to have occurred in 2013, the NRC has adjusted 2013 costs in tables throughout this chapter to constant 2014 dollars using the Bureau of Labor Statistics' (BLS') Consumer Price Index (CPI) as described in Section 2.1 of this GEIS (CPI data from BLS 2014). Although the costs of GEIS development and rulemaking activities have been incurred, the NRC does not include these costs for options that do not require their completion (e.g., the estimated cost of the site-specific review option does not include GEIS or rulemaking costs).

The NRC made reasonable assumptions for current and future licensing reviews that inform the NRC's cost estimates. This analysis considers site-specific licensing reviews over 30 years that would rely on 10 CFR 51.23 to address the environmental impacts of continued storage. All assumptions related to NRC costs for continued storage include costs associated with the additional NRC efforts on National Environmental Policy Act of 1969, as amended (NEPA) reviews as well as NRC participation in adjudicatory hearings, as appropriate.

The GEIS assumptions are based in part on NRC projections of current and likely licensing reviews (see, for example, SECY–12–0132 for a list of applications currently under review or projected to begin before the end of fiscal year 2014 [NRC 2012]). The assumptions address three categories of licensing actions: new reactor applications, reactor license renewal applications, and site-specific independent spent fuel storage installations (ISFSI) applications.

The NRC assumes that applicants for new or renewed licenses affected by 10 CFR 51.23 would incur costs in the absence of an updated Rule equal to those the NRC incurs in addressing the impacts of continued storage. As a result, the total costs for site-specific reviews are double the NRC's costs discussed in this chapter. Quantified totals in the tables in this chapter include industry costs. The NRC assumes that applicants will incur additional costs by developing applications that address the environmental impacts of continued storage, responding to the NRC's requests for additional information related to continued storage, and participating in any adjudicatory proceedings related to continued storage.

The NRC may potentially incur some unquantified costs when implementing either the proposed action or any of the NRC's potential options in case of no action because all of these approaches to addressing the environmental impacts of continued storage differ, in some aspects, from the NRC's long-established approach of relying on 10 CFR 51.23 supported by an environmental assessment (EA). These implementation costs are likely to be similar in magnitude for whichever approach the NRC implements.

The NRC calculated its estimated costs based in part on anticipated staff time—measured in full-time equivalents (FTEs)—and anticipated contractor effort, where applicable, measured in contract dollars. The average cost for one NRC staff FTE is $166,000 per year (based on data

collected from fiscal year 2013), which is based on the methodology provided in NUREG/CR–4627, *Generic Cost Estimates* (Sciacca 1992). The NRC's estimates of potential licensing actions and associated cost calculations are available in Appendix H, Estimated Costs of Alternatives.

7.1.1 New Reactor Applications

The NRC is currently reviewing nine combined license (COL) applications and one early site permit (ESP) application (see Appendix H, Table H-1, for a list of applications).[2] In reviewing each COL and ESP application, the NRC develops a site-specific environmental impact statement (EIS) that addresses the potential environmental impacts of the proposed facility. If the NRC takes no action to adopt a revised 10 CFR 51.23, then the NRC would need to separately address the environmental impacts of continued storage in the course of each ongoing and future new-reactor licensing review. The NRC assumes that the first site-specific review of the environmental impacts of continued storage would require more time and effort than subsequent reviews because the first application would be developed with a general approach that could then be used in subsequent application reviews.

In general, COL and ESP application reviews take longer and require more staff effort to complete than other NRC reviews that relied on 10 CFR 51.23. Among other factors, COL and ESP applications frequently include cooperating agencies, while COL proceedings additionally require mandatory hearings prior to a Commission decision on an application. The NRC estimates that the first site-specific review of continued storage in a COL EIS supplement[3] would require approximately 3.9 FTEs, or $647,000, and $1 million in contractor support (total of $1.65 million), based on staff experience supplementing COL EISs. The NRC estimates that

[2] One of the COL applications currently under review, Calvert Cliffs Unit 3, is subject to substantial uncertainty. An NRC Atomic Safety and Licensing Board (ASLB) found that the applicants are ineligible to receive a COL because they are wholly owned by a foreign company, in violation of Commission policy based on Section 103d of the Atomic Energy Act (LBP-12-19). On March 11, 2013, the Commission denied the applicants' appeal of the ASLB's decision (CLI–13–04) (NRC 2013a). The applicants have stated that they intend to find a domestic co-owner for the proposed facility. For the purposes of this analysis, however, the NRC has included the Calvert Cliffs Unit 3 COL application.

[3] Under 10 CFR 51.92(a), the NRC prepares a supplement to a final EIS when a proposed action has not yet been taken, but there are either substantial changes in the proposed action that are relevant to environmental concerns or there are new and significant circumstances or information relevant to environmental concerns and bearing on the proposed action or its impacts. For the first three new-reactor reviews, the NRC anticipates that it would supplement final EISs. The supplementation process includes development of a draft supplemental EIS, publication of the draft supplemental EIS, an opportunity for public comments on the draft, NRC efforts to consider and resolve comments, and publication of a final supplemental EIS. This process generally duplicates costs already incurred in a standard EIS process. During the supplementation process, applicants may incur expenses when they develop supplements to existing applications, when they respond to NRC requests for additional information, and when they participate in adjudicatory proceedings related to issues raised during the supplemental EIS process.

the next seven reviews (i.e., six COLs and one ESP) will require supplementation of existing EISs at a cost of approximately 2.9 FTEs, or $481,000, and $500,000 in contract support (a total of $981,000) each. The NRC estimates that two remaining new reactor reviews, which do not require supplementation, will require 0.3 FTE, or $49,800.[4] See Appendix H, Table H-1, for new reactor cost calculations.

As noted in Chapter 2 of this GEIS, the NRC is currently engaged in preapplication activities with several applicants for light water small modular reactors. Because the light water reactor fuel that would be used in iPWR (integral pressurized water reactors; a type of small modular reactor) designs is substantially similar to existing light water reactor fuel (i.e., zircaloy clad, low-enriched uranium oxide pellets in square cross-section fuel rod arrays), iPWR fuel is within the scope of the GEIS analysis. The NRC expected to receive applications for NRC review and approval of small modular designs pursuant to 10 CFR Part 52 as early as 2013 (NRC 2013b), but there is no current plan for the NRC to receive or begin review of applications for specific small modular reactor power plants.

Design certification reviews for iPWRs would not require assessments of the impacts of continued storage, but licensing reviews for specific sites would require these assessments. At the time of this GEIS publication, only one licensee, the Tennessee Valley Authority (TVA), has expressed an interest in applying for construction permits pursuant to 10 CFR Part 50 for two to six small modular reactors, with potential subsequent units licensed pursuant to 10 CFR Part 52 (NRC 2013c). In 2011, TVA informed the NRC of its intent to submit a construction permit application (TVA 2011), but TVA has not submitted an application as of the GEIS publication date.

As a result of the substantial uncertainties associated with future small modular reactor licensing reviews, the NRC has not included any small modular reactors in its cost projections. Beyond the uncertainty related to applications, there is some uncertainty about review costs for small modular reactor applications. It is reasonable to assume, however, that the effort necessary to address the environmental impacts of continued storage for small modular reactors will be similar to the effort necessary to address the environmental impacts of continued storage for other new reactor applications. If applicants develop and submit applications for small modular reactors to the NRC, then each additional review activity would require an estimated 0.3 FTE, or $49,800.

[4] An additional facility, Watts Bar Nuclear Plant, Unit 2, is a proposed new reactor currently undergoing an operating license review under 10 CFR Part 50. The NRC projects that Watts Bar Nuclear Plant, Unit 2, would require approximately 1.4 FTEs and no contractor support for a review of environmental impacts of continued storage, for a total cost of $232,000. The approach and format for the Watts Bar Nuclear Plant, Unit 2 EIS (NRC 2011) is substantially similar to EISs developed for reactor license renewal, so the cost projection is the same as the projection applied to plants undergoing license renewal reviews that require EIS supplementation.

7.1.2 Reactor License Renewal

The NRC currently has ten reactor license renewals under review (see Appendix H, Table H-2, for a list of applications). An approved license renewal may add up to 20 years of additional operation to an existing commercial power reactor license (10 CFR 54.31(b)).

In the course of reviewing a license renewal application, the NRC prepares a site-specific supplement to the *GEIS for License Renewal of Nuclear Plants* (License Renewal GEIS, or NUREG−1437). A supplemental EIS for license renewal requires less time and effort than a COL or ESP EIS because the License Renewal GEIS has already addressed many environmental issues, the plant under review has typically been operating at the site for at least 20 years (avoiding the need for a review of alternative sites for the proposed renewal) and its effects on the environment tend to be well understood, and because license renewal typically involves no new construction. In addition, license renewal supplemental EISs typically do not include cooperating agencies and do not require mandatory hearings. If the NRC takes no action to adopt a revised 10 CFR 51.23, then the NRC would need to separately address the environmental impacts of continued storage in the course of each ongoing and future reactor-license-renewal review.

The NRC projects that the first site-specific review of continued storage in a supplemental EIS for license renewal would require more time and effort than subsequent reviews in order to develop a general approach that subsequent reviews would then use. The first review would require an estimated 2.5 FTEs, or $415,000 based on NRC experience supplementing license renewal EISs. The NRC further projects that some reviews would require supplementation of existing EISs, and these reviews would require approximately 1.4 FTEs, or $232,000. Reviews that have already begun but that do not require supplementation would require approximately 1.1 FTEs, or $183,000. Reviews of applications that have not yet been submitted would require approximately 0.3 FTE, or $49,800, or the same amount of effort as new reactor reviews that do not require supplementation. In addition to reviews already received, the NRC projects that all plants that have yet to apply for license renewal would apply for renewal by 2020 for purposes of this analysis (NRC 2013d).[5] See Appendix H, Table H-2, for license renewal cost calculations.

Further, the NRC assumes that approximately half of the existing reactor fleet will apply for subsequent license renewal (which could allow plants to operate for a total of up to 80 years) beginning in 2017. The NRC estimates that it will review a total of 28 applications—or one

[5] Watts Bar Nuclear Plant, Unit 1 is the only unit licensed under 10 CFR Part 50 that is not eligible to request license renewal at the time of GEIS publication. The NRC assumes that this facility will eventually seek a license renewal for purposes of this analysis.

application per year—from 2017 through the end of 2044.[6] The NRC assumes that the continued storage portion of these NEPA reviews will be substantially similar to the reviews performed during the initial license renewal review. The NRC estimates that subsequent license renewal reviews will require an estimated 0.3 FTE, or $49,800.

7.1.3 ISFSI Licensing

Currently, 15 sites possess site-specific ISFSI licenses (NRC 2013e), and one potential applicant has expressed an interest in licensing a new away-from-reactor ISFSI (ELEA 2013).[7] The majority of existing ISFSIs, however, are generally licensed. The NRC does not perform a site-specific review for generally licensed ISFSIs; rather, historically, the NRC has performed an EA (with a finding of no significant impact [FONSI]) for each available cask design, and a facility's ability to possess nuclear materials is subject to its 10 CFR Part 50 or Part 52 license. As a result, the NRC assumes, for purposes of this analysis, that there are no costs associated with general ISFSI licensing related to considering the environmental impacts of continued storage during the 30-year analysis period.

The term for a site-specific ISFSI license must not exceed 40 years (10 CFR 72.42(a)). During site-specific ISFSI licensing (new licenses and license renewals), the NRC typically develops an EA that concludes with a FONSI. To date, every at-reactor site-specific ISFSI EA has reached a FONSI. If the NRC takes no action to adopt a revised 10 CFR 51.23, then the NRC would need to separately address the environmental impacts of continued storage in the course of each ongoing and future site-specific ISFSI review.

The NRC estimates that approximately 0.5 FTE, or $83,000, is necessary to support site-specific considerations of continued storage matters in the first two ISFSI EAs, both of which

[6] Commercial nuclear power plant licensees typically apply for license renewal for all reactors at a site at the same time. There are currently 61 sites (Salem and Hope Creek share a site) that host operational commercial power reactors with 10 CFR Part 50 operating licenses or both 10 CFR Part 50 operating licenses and 10 CFR Part 52 combined licenses. Licensees have announced plans to cease nuclear power plant operations at two of these sites, Vermont Yankee and Oyster Creek. Of the remaining 59 sites, licensees at three sites could apply for subsequent license renewal after 2044 (beyond the period of this analysis) and still potentially meet the timely renewal provisions of 10 CFR 2.109 (Comanche Peak Units 1 and 2; Seabrook; and Watts Bar Nuclear Plant, Unit 1). Removing from the analysis the plants whose operators have announced their intent to shut down prior to seeking subsequent renewal leaves a maximum of 56 to 59 currently operating sites whose operators may apply for subsequent license renewal during the analysis period. Because the NRC assumes that operators will apply for subsequent license renewal for approximately half of the operational sites, the NRC includes 28 (half of 56) subsequent-renewal reviews in this analysis. The inclusion of any particular licensing action in this analysis does not prejudge the outcome of any pending or future license renewal review; rather it addresses the potential cost implications of potential subsequent renewals.

[7] Private Fuel Storage (PFS)—an away-from-reactor ISFSI licensee—applied for and received a site-specific license, but its facility has not been constructed, nor has it taken delivery of spent fuel.

are currently under review. The NRC estimates that later ISFSI EAs will require 0.25 FTE, or $41,500. See Appendix H, Table H-3, for ISFSI-related cost calculations and a list of affected actions.

7.2 Estimated Costs and Benefits of the Proposed Action

In the proposed action, the NRC adopts an updated Rule, 10 CFR 51.23, which codifies, or adopts into regulation, the analysis in the GEIS of the environmental impacts of continued storage of spent fuel. The update would clarify that, because the impacts of continued storage have been generically assessed in a GEIS and codified in a Rule, the NEPA analyses for future reactor and spent fuel storage facility licensing actions will incorporate or consider, respectively, the impact determinations in the GEIS regarding the environmental impacts of continued storage. The effect of the adoption of the analysis into the Rule means that the NRC will conclusively use the environmental impact determinations from the analysis in individual license proceedings, unless a petitioner satisfies the requirements of 10 CFR 2.335, including a showing of special circumstances, to waive the application of 10 CFR 51.23 in a particular proceeding.

The primary benefit of the proposed action is that it eliminates from site-specific licensing reviews the costs associated with identifying the environmental impacts of continued storage. In addition, this approach is generally consistent with Council on Environmental Quality (CEQ) guidance regarding efficiency and timeliness under NEPA (77 FR 14473), as well as the NRC's longstanding preference for resolving generic issues generically (see, for example, 37 FR 15127).

As shown in Table 7-1, preparation of the GEIS and Rule incurs costs. The NRC estimates that the proposed action requires approximately 23 FTEs (or $3.82 million) in each of 2013 and 2014, or $7.64 million total (unadjusted). In addition, the proposed action requires an estimated $6 million (unadjusted) of contract support spread across the 2 years. Most of the expenditures associated with the proposed action will occur as a result of the GEIS development. The NRC estimates that approximately 6 FTE, or $1.04 million, of the total expenditure is a result of the rulemaking portion of the proposed action. See Appendix H, Table H-4, for more information regarding GEIS and rulemaking costs.

As noted in Section 7.1, the NRC has adjusted GEIS and rulemaking costs to 2014 dollars using the CPI. In addition, because NRC's costs for the GEIS and rulemaking do not occur in the future, GEIS and rulemaking costs are not affected by discounting. As also noted in Section 7.1, while GEIS and rulemaking costs are technically past, or "sunk" costs, the NRC discloses them in Table 7-1 as costs of the proposed action to provide a complete and transparent analysis of the costs of the proposed action and the NRC's potential options in case of no action.

Table 7-1. Estimated Costs of the Proposed Action

Components	Estimated Costs (millions of 2014 dollars)		
	Constant Dollars	3% Discount Case	7% Discount Case
Site-Specific Review Costs[(a)]	-	-	-
GEIS Costs	$12.7	$12.7	$12.7
Rulemaking Costs	$1.00	$1.00	$1.00
Policy Statement Costs	-	-	-
Estimated Total Cost[(b)]	**$13.7**	**$13.7**	**$13.7**

(a) Table 7-1, Table 7-2, Table 7-3, and Table 7-4 contain line items for site-specific review costs, GEIS costs, rulemaking costs, and policy statement costs, respectively. The NRC populates each table according to the components necessary for the action considered in each respective section. Here, the proposed action does not require a policy statement, so the NRC includes no costs for that component in Table 7-1.
(b) Due to rounding, costs may not appear to sum correctly. All costs are rounded to three significant figures.

7.3 Estimated Costs and Benefits of the Site-Specific Review Option

Under the site-specific review option, the NRC would not adopt an updated 10 CFR 51.23, nor would it implement any of the other approaches considered in this GEIS. The NRC would not rely on this GEIS, but it may, however, attempt to make use of some of the work already performed during the development of the GEIS. The NRC would review the generic environmental impacts from continued storage in licensing-specific NEPA reviews that the NRC performs for new reactor licensing, reactor license renewal, ISFSI licensing, and ISFSI license renewal (see Appendix H, Table H-1, Table H-2, and Table H-3 for affected actions and their respective estimated costs). The NRC and license applicants incur the majority of the costs from the site-specific review option. Costs also accrue through NRC adjudicatory activities, which affect the NRC, license applicants, and petitioners or interveners. In general, expenses to petitioners are case-specific and difficult to quantify, so the NRC has not quantified them here. Table 7-2 contains cost estimates for the site-specific review option based on the detailed information presented in Appendix H.

Table 7-2. Constant and Discounted Estimated Costs of the Site-Specific Review Option

Components	Estimated Costs (millions of 2014 dollars)		
	Constant Dollars	3% Discount Case	7% Discount Case
Site-Specific Review Costs	$27.3	$24.7	$22.3
GEIS Costs	-	-	-
Rulemaking Costs	-	-	-
Policy Statement Costs	-	-	-
Estimated Total Cost[(a)]	**$27.3**	**$24.7**	**$22.3**

(a) Due to rounding, costs may not appear to sum correctly. All figures are rounded to three significant figures.

The primary quantifiable benefit of the site-specific review option is that the NRC would not need to prepare a GEIS and Rule or a policy statement (consequently, the past costs of GEIS development and rulemaking, while already incurred, are not included in Table 7-2). Perceptions vary among stakeholders regarding whether reviewing the environmental impacts of continued storage in site-specific licensing actions or being able to challenge the consideration of these impacts in litigation without a waiver is classified as a cost or a benefit. In a site-specific NEPA analysis, the NRC would describe location-specific conditions, address the site-specific impacts of a potential licensing action, and address the impacts of continued storage. The value of reviewing continued storage in site-specific NEPA analyses is difficult to quantify.

Another cost of the site-specific review option relates to increased scheduling uncertainties in licensing due to additional environmental reviews and potential increased litigation associated with continued storage. The effects of schedule uncertainties are likely to be most significant for new reactor or new site-specific ISFSI applicants. Delays can be more costly for new reactor applicants, which could incur billions of dollars of additional expenses if a project is delayed. These costs can include increased financing costs, longer-term accumulation of interest on debt, replacement-power costs, and contractual penalties. Because these costs are highly case-specific, the NRC has not attempted to quantify them.

Applicants for renewed reactor and site-specific ISFSI licenses that submit timely and sufficient renewal applications are protected from schedule uncertainty, at least insofar as continued operations are concerned, by 10 CFR 2.109. Specifically, 10 CFR 2.109 allows for operations of reactors and ISFSIs until the applications have been finally determined, even if final determinations take place after the license expiration dates. Nonetheless, delays may affect applicants' plans to commence activities that may depend upon renewed licenses. Because these types of expenses vary significantly and are case-specific, the NRC has not attempted to quantify them.

7.4 Estimated Costs and Benefits of the GEIS-Only Option

The GEIS-only option is similar to the proposed action insofar as the NRC develops and relies upon this GEIS. It differs because the Commission does not adopt an updated 10 CFR 51.23 that codifies the GEIS findings. Because the Commission does not codify the GEIS findings in this no-action option, the environmental impacts of continued storage remain open to site-specific consideration by the NRC. Petitioners may also challenge an applicant's or the NRC's consideration of the impacts of continued storage without a waiver petition pursuant to 10 CFR 2.335. Reliance on a GEIS to address generic issues, however, is consistent with CEQ guidance regarding efficiency and timeliness under NEPA (77 FR 14473).

The primary benefit of the GEIS-only option relative to the site-specific review option is that it reduces NRC and applicant costs in conducting NEPA reviews. The NRC assumes that

applicants will refer to GEIS findings in environmental reports, and the NRC will incorporate GEIS findings and analyses by reference into NEPA documents for new reactor licensing, reactor license renewals, ISFSI licensing, and ISFSI license renewals. The NRC assumes that reliance on the GEIS in site-specific reviews may resolve concerns for some issues related to continued storage, while other issues may require additional effort to resolve comments, address site-specific litigation, or to establish that the GEIS findings are applicable to a specific licensing proceeding. As a result, the NRC assumes that the GEIS-only option will decrease the cost to the NRC and applicants by 50 percent compared to the site-specific review option at best, and at worst will not reduce the NRC and applicant effort compared to the site-specific review option. Therefore, the NRC presents the costs of the GEIS-only option as a range in Table 7-3.

Table 7-3. Constant and Discounted Estimated Costs of the GEIS-Only Option

	Estimated Costs (millions of 2014 dollars)		
Components	**Constant Dollars**	**3% Discount Case**	**7% Discount Case**
Site-Specific Review Costs	$13.6 to $27.3	$12.4 to $24.7	$11.2 to $22.3
GEIS Costs	$12.7	$12.7	$12.7
Rulemaking Costs	-	-	-
Policy Statement Costs	-	-	-
Estimated Total Cost[(a)]	**$26.4 to $40.0**	**$25.1 to $37.5**	**$23.9 to $35.1**

(a) Due to rounding, costs may appear not to sum correctly. All costs are rounded to three significant figures.

As was the case in the site-specific review option, perceptions vary among stakeholders regarding whether reviewing the environmental impacts of continued storage in site-specific licensing actions as part of the GEIS-only option or being able to challenge the consideration of these impacts without a waiver is classified as a cost or a benefit. In a site-specific NEPA analysis, the NRC would describe location-specific conditions, address the site-specific impacts of a potential licensing action, and address the impacts of continued storage.

Preparation of the GEIS, however, requires costs not necessary under the site-specific review alternative, as shown in Table 7-3. GEIS preparation requires an estimated 20 FTEs (or $3.32 million) in each of 2013 and 2014, or $6.64 million total (unadjusted). In addition, GEIS preparation requires an estimated $6 million of contract support spread across the 2 years. See Appendix H, Table H-4, for more information regarding GEIS costs.

As noted in Section 7.1, the NRC has adjusted GEIS costs in Table 7-3 to 2014 dollars using the CPI. In addition, because NRC's costs for the GEIS do not occur in the future, GEIS costs are not affected by discounting. As also noted in Section 7.1, while GEIS costs are technically past, or "sunk" costs, the NRC discloses them in Table 7-3 as costs of the GEIS-only option to provide a complete and transparent analysis of this potential option in the case of no action.

The NRC does not include the past costs of rulemaking in Table 7-3 because rulemaking is not a necessary component of the GEIS-only option.

Similar to the site-specific review option, another cost of the GEIS-only option relates to increased scheduling uncertainties in licensing due to additional environmental reviews and potential increased litigation associated with continued storage. The effects of schedule uncertainties are likely to be most significant for new reactor or new site-specific ISFSI applicants. Delays can be more costly for new reactor applicants, which could incur billions of dollars of additional expenses if a project is delayed. These costs can include increased financing costs, longer-term accumulation of interest on debt, replacement-power costs, and contractual penalties. Because these costs vary significantly and are case-specific, the NRC has not attempted to quantify them.

Applicants for renewed reactor and site-specific ISFSI licenses that submit timely and sufficient renewal applications are protected from schedule uncertainty, at least insofar as continued operations are concerned, by provisions of 10 CFR 2.109. Specifically, 10 CFR 2.109 allows for operations of reactors and ISFSIs until the applications have been finally determined, even if final determination takes place after the license expiration date. Nonetheless, delays may affect applicants' plans to commence activities that may depend upon renewed licenses. Because these types of expenses are case-specific, the NRC has not attempted to quantify them.

7.5 Estimated Costs and Benefits of the Policy-Statement Option

The policy-statement option in case of no action is similar to the GEIS-only option. As in the GEIS-only option, the policy-statement option would rely on this GEIS to address the environmental impacts of continued storage. In addition, the Commission would develop a policy statement to address specific issues and to bind the NRC in its approach to addressing the environmental impacts of continued storage in site-specific environmental reviews.

As in the GEIS-only option, the Commission does not adopt an updated 10 CFR 51.23 that codifies the GEIS findings. Because the Commission does not codify the GEIS findings in this option, the environmental impacts of continued storage remain open to site-specific consideration by the NRC, within the constraints imposed by the Commission's policy statement. Petitioners may challenge an applicant's or the NRC's consideration of the impacts of continued storage without a waiver petition pursuant to 10 CFR 2.335 and would not be constrained by the Commission's policy statement on continued storage. Reliance on a GEIS, however, to address generic issues is consistent with CEQ guidance regarding efficiency and timeliness under NEPA (77 FR 14473).

In application, the policy-statement option is substantially similar to the GEIS-only option. The primary benefit is that it reduces NRC and applicant effort in conducting reviews, thereby increasing efficiency and thus decreasing cost. The NRC assumes that applicants will refer to GEIS findings in environmental reports, and the NRC will incorporate GEIS findings and analyses by reference into site-specific EISs for new reactors, reactor license renewals, and ISFSI licensing. As in the GEIS-only option, the NRC assumes that reliance on the GEIS in site-specific reviews may resolve concerns for some issues related to continued storage, while other issues may require additional effort to resolve comments, address site-specific litigation, or to establish that the GEIS findings are applicable to a specific licensing proceeding. The NRC assumes that the decreased cost in conducting site-specific reviews under the policy-statement option relative to the site-specific review option is likely to be similar to the decreased effort from the GEIS-only option relative to the site-specific review option. The NRC assumes that the policy-statement option will decrease the cost to the NRC and applicants by an estimated 50 percent relative to the site-specific review option, at best, and at worst will not reduce the NRC and applicant effort compared to the site-specific review option. The NRC therefore presents the cost of the policy-statement option as a range in Table 7-4.

Table 7-4. Constant and Discounted Estimated Costs of the Policy-Statement Option

	Estimated Costs (millions of 2014 dollars)		
Components	**Constant Dollars**	**3% Discount Case**	**7% Discount Case**
Site-Specific Review Costs	$13.6 to $27.3	$12.4 to $24.7	$11.2 to $22.3
GEIS Costs	$12.7	$12.7	$12.7
Rulemaking Costs	-	-	-
Policy Statement Costs	$0.498	$0.476	$0.450
Estimated Total Cost[(a)]	**$26.9 to $40.5**	**$25.6 to $38.0**	**$24.3 to $35.5**

(a) Due to rounding, costs may appear not to sum correctly. All costs are rounded to three significant figures.

Preparation of the GEIS and policy statement contribute to the costs of this option. The NRC estimates that a policy statement adds 3 FTEs, or $498,000 (undiscounted), to the cost estimate for the policy-statement option. GEIS preparation requires an estimated 20 FTEs, or $3.46 million, in each of 2013 and 2014, or $6.44 million total (unadjusted). In addition, GEIS preparation requires an estimated $6 million (unadjusted) of contract support spread across the 2 years. As a result of the effort expended in creating the GEIS and policy statement in addition to the effort expended in performing site-specific reviews, the policy-statement option provides a negative net benefit when compared to the site-specific review option. See Appendix H, Table H-4, for more information regarding GEIS and policy-statement costs.

As noted in Section 7.1, the NRC has adjusted GEIS costs in Table 7-4 to 2014 dollars using the CPI. In addition, because NRC's costs for the GEIS do not occur in the future, GEIS costs are not affected by discounting. Costs of the policy statement, however, are estimated to occur

in 2015 and 2016, and so are presented in discounted figures, where appropriate. Also, while GEIS development costs are technically past, or "sunk" costs, the NRC discloses them in Table 7-4 as costs of the policy-statement option to provide a complete and transparent analysis of this potential option in the case of no action. The NRC does not include the past costs of rulemaking in Table 7-4 because rulemaking is not a necessary component of the policy-statement option.

Similar to the site-specific review and GEIS-only options, another cost of the policy-statement option relates to increased scheduling uncertainties in licensing due to additional environmental reviews and potential increased litigation associated with continued storage. The effects of schedule uncertainties are likely to be most significant for new reactor or new site-specific ISFSI applicants. Delays can be more costly for new reactor applicants, which could incur billions of dollars of additional expenses if a project is delayed. These costs can include increased financing costs, longer-term accumulation of interest on debt, replacement-power costs, and contractual penalties. Because these costs vary significantly and are case-specific, the NRC has not attempted to quantify them.

As was the case in the site-specific review option and the GEIS-only option, perceptions vary among stakeholders regarding whether reviewing the environmental impacts of continued storage in site-specific licensing actions as part of the policy-statement option or being able to challenge the consideration of these impacts without a waiver is classified as a cost or a benefit. In a site-specific NEPA analysis, the NRC would describe location-specific conditions, address the site-specific impacts of a potential licensing action, and address the impacts of continued storage.

Applicants for renewed reactor and site-specific ISFSI licenses that submit timely and sufficient renewal applications are protected from schedule uncertainty, where continued operations are concerned, by provisions of 10 CFR 2.109. Specifically, 10 CFR 2.109 allows for operations of reactors and ISFSIs until the applications have been finally determined, even if final determination takes place after the license expiration date. Nonetheless, delays may affect applicants' plans to commence activities that may depend upon renewed licenses. Because these types of expenses vary significantly and are case-specific, the NRC has not attempted to quantify them.

7.6 Comparison of Alternatives

Table 7-5 summarizes the estimated quantified costs for the proposed action and NRC's potential options under the no-action alternative. The analysis indicates that the quantified cost for the proposed action is significantly lower than the cost for any of the options under the no-action alternative (see Table 7-5; this disparity would have been even greater if the NRC had not included the past, or "sunk" costs of the GEIS and rulemaking). This occurs primarily

because the NRC does not undertake site-specific reviews of continued storage in the course of individual licensing proceedings as part of the proposed action. For additional detail, see Appendix H, Table H-5.

Table 7-5. Summary of Constant and Discounted Estimated Costs for the Proposed Action and NRC's Potential Options in the Case of No Action (in millions of 2014 dollars)

Estimated Cost	Proposed Action	GEIS-Only	Policy-Statement	Site-Specific Review
Constant 2014 Dollars	$13.7	$26.4 to $40.0	$26.9 to $40.5	$27.3
3% Discount Case	$13.7	$25.1 to $37.5	$25.6 to $38.0	$24.7
7% Discount Case	$13.7	$23.9 to $35.1	$24.3 to $35.5	$22.3

(a) Due to rounding, some costs may appear not to sum correctly. All costs are rounded to three significant figures.

While the site-specific review option does not require the costs associated with GEIS development and rulemaking, site-specific review costs are significantly higher than the costs of the GEIS development and rulemaking. Also, the GEIS-only and policy-statement options do not require rulemaking, but they result in higher overall costs than the site-specific review option because of their respective up-front costs.

In addition to quantified financial differences between the proposed action and NRC's options in case of no action, unquantified (qualified) differences also exist. Table 7-6 contains a summary of unquantified costs and benefits of the approaches. First, all of the NRC's options in case of no action create schedule uncertainties that result from site-specific litigation of generic continued storage issues. While costs that result from these uncertainties may be large, they are difficult to quantify because they vary significantly, and they are case- and fact-dependent.

Perceptions vary among stakeholders regarding whether reviewing the environmental impacts of continued storage in site-specific licensing actions or being able to litigate site-specific issues without a waiver pursuant to 10 CFR 2.335 is classified as a cost or a benefit.

As noted in the introduction to this chapter, the proposed action and each of NRC's potential options in case of no action provides a means of addressing the environmental impacts of continued storage. The proposed action and NRC's options in case of no action do not alter the NRC's assessment of environmental impacts from continued storage presented in Chapters 4, 5, and 6, so the environmental impacts identified in those chapters are applicable regardless of which approach NRC chooses to pursue.

Table 7-6. Summary of Unquantified Costs and Benefits of the Proposed Action and NRC's Potential Options in Case of No Action

Proposed Action	
Benefits	*Costs*
• Generically resolves a generic issue; avoids unnecessary, repetitive reviews • Removes potential for lengthy, site-specific litigation and resulting delays, except in cases with special circumstances • Consistent with CEQ guidance on efficiency and timeliness, as well as with NRC's long-standing preference for resolving generic issues generically • Avoids potential additional costs from small modular reactor applications	• Public-perception cost from precluding continued storage from site-specific review[(a)] • Public-perception cost from being unable to challenge NRC findings without a waiver petition[(a)]
Site-Specific Review Option	
Benefits	*Costs*
• Public-perception benefit from site-specific reviews[(a)] • Public-perception benefit from the ability to challenge NRC findings without a waiver petition[(a)]	• Potential for additional delays due to site-specific litigation, which may incur substantial additional costs • Repetitive consideration of a generic issue • Not consistent with CEQ guidance on efficiency and timeliness or with NRC's long-standing preference for resolving generic issues generically • Potential additional costs from small modular reactor applications
GEIS-Only Option	
Benefits	*Costs*
• Public-perception benefit from site-specific reviews[(a)] • Public-perception benefit from the ability to challenge NRC findings without a waiver petition[(a)] • Consistent with CEQ guidance on efficiency and timeliness	• Potential for additional delays due to site-specific litigation, which may incur substantial additional costs • Repetitive consideration of a generic issue • Potential additional costs from small modular reactor applications
Policy-Statement Option	
Benefits	*Costs*
• Public-perception benefit from site-specific reviews[(a)] • Public-perception benefit from the ability to challenge NRC findings without a waiver petition[(a)] • Consistent with CEQ guidance on efficiency and timeliness	• Potential for additional delays due to site-specific litigation, which may incur substantial additional costs • Repetitive consideration of a generic issue • Potential additional costs from small modular reactor applications

(a) The NRC recognizes that perceptions vary among stakeholders regarding whether reviewing environmental impacts of continued storage in site-specific licensing actions or being able to challenge the consideration of these impacts without a waiver is classified as a cost or a benefit. The NRC includes perceptual issues as costs and benefits in this table because there is a record of public interest and concern in scoping and in comments on the draft GEIS regarding how site-specific reviews are (or are not) addressed as part of this rulemaking (see Response D.2.15.4 and responses in Section D.2.15 of Appendix D for additional information).

7.7 Final Analysis and Final Recommendation

The proposed action (adoption of a revision to 10 CFR 51.23 that codifies the conclusions in this GEIS) has no significant environmental impacts, as addressed in Section 1.6.3. In addition, the proposed action requires only minimal commitments of resources, and only insofar as the NRC consumed materials—like paper—to develop and publish the draft and final GEIS and proposed and final Rule, and to facilitate public involvement and comment at various stages of the project. Finally, the proposed action is an administrative approach to considering the environmental impacts of continued storage in the NRC's environmental documents, and therefore does not affect the balance between short-term uses of the environment and the maintenance and enhancement of long-term productivity. These findings are consistent with the categorical exclusion contained in 10 CFR 51.22(c)(3)(i).

The NRC recommendation is to select the proposed action—adopting a revision to 10 CFR 51.23 that codifies the impact determinations from the GEIS—as the preferred alternative. In making its recommendation, the NRC has determined that the proposed action is superior to the NRC's options in the case of no action in terms of both costs and benefits. The NRC recommendation is based on (1) the NRC's analysis of the cost-benefit balance of the proposed action and its options in the case of no action as presented in this chapter; (2) the NRC's consideration of public-scoping and draft-stage comments in the development of the GEIS; (3) the lack of environmental impacts associated with either the proposed action or the NRC's options in the case of no action, as addressed in Section 1.6.3; and (4) the NRC's determination that the environmental impacts of continued storage analyzed elsewhere in this GEIS are unaffected by the NRC's choice of a particular administrative approach for considering the environmental impacts of continued storage in NRC licensing processes.

7.8 References

10 CFR Part 2. *Code of Federal Regulations*, Title 10, *Energy*, Part 2, "Agency Rules of Practice and Procedure." Washington, D.C.

10 CFR Part 50. *Code of Federal Regulations*, Title 10, *Energy*, Part 50, "Domestic Licensing of Production and Utilization Facilities." Washington, D.C.

10 CFR Part 51. *Code of Federal Regulations*, Title 10, *Energy*, Part 51, "Environmental Protection Regulations for Domestic Licensing and Related Regulatory Functions." Washington, D.C.

10 CFR Part 52. *Code of Federal Regulations*, Title 10, *Energy*, Part 52, "Licenses, Certifications, and Approvals for Nuclear Power Plants." Washington, D.C.

10 CFR Part 54. *Code of Federal Regulations*. Title 10. *Energy,* Part 54. "Requirements For Renewal Of Operating Licenses For Nuclear Power Plants." Washington, D.C.

10 CFR Part 72. *Code of Federal Regulations*, Title 10, *Energy*, Part 72, "Licensing Requirements for the Independent Storage of Spent Nuclear Fuel, High-Level Radioactive Waste, and Reactor-Related Greater than Class C Waste." Washington, D.C.

37 FR 15127. July 28, 1972. "Restructuring of Facility License Application Review and Hearing Process." *Federal Register*, Atomic Energy Commission, Washington, D.C.

77 FR 14473. March 12, 2012. "Final Guidance on Improving the Process for Preparing Efficient and Timely Environmental Reviews Under the National Environmental Policy Act." *Federal Register*, Council on Environmental Quality, Washington, D.C.

Atomic Energy Act of 1954, as amended. 42 USC 2011 *et seq*.

BLS (U.S. Bureau of Labor Statistics). 2014. "CPI Detailed Report—Data for March 2014." Washington, D.C. Available at http://www.bls.gov/cpi/cpid1403.pdf.

ELEA (Eddy-Lea Energy Alliance). 2013. Letter from J.M. Maddox to C. Haney, dated February 26, 2013, regarding "Notice of Intent to Submit a License Application for Consolidate Used Nuclear Fuel Facility." Hobbs, New Mexico. Accession No. ML13067A278.

National Environmental Policy Act of 1969 (NEPA), as amended. USC 4321 *et seq.*

NRC (U.S. Nuclear Regulatory Commission). 2004. *Regulatory Analysis Guidelines of the U.S. Nuclear Regulatory Commission*. NUREG/BR–0058, Revision 4, Washington, D.C. Accession No. ML042820192.

NRC (U.S. Nuclear Regulatory Commission). 2011. *Draft Supplemental Environmental Impact Statement Related to the Operation of Watts Bar Nuclear Plant, Unit 2.* NUREG–0498, Supplement 2, Washington, D.C. Accession Nos. ML11298A094, ML11298A095.

NRC (U.S. Nuclear Regulatory Commission). 2012. Memorandum from C. Haney to The Commissioners dated October 3, 2012, regarding "Implementation of Commission Memorandum and Order CLI–12–16 Regarding Waste Confidence Decision and Rule with Enclosure: Licensing Actions Affected by Waste Confidence Remand." Washington, D.C. Accession No. ML12276A054.

NRC (U.S. Nuclear Regulatory Commission). 2013a. *Memorandum and Order in the Matter of Calvert Cliffs 3 Nuclear Project, LLC and Unistar Nuclear Operating Services, LLC.* CLI–13–04. Rockville, Maryland. Accession No. ML13070A117.

NRC (U.S. Nuclear Regulatory Commission). 2013b. "Advanced Reactors." Washington, D.C. Available at http://www.nrc.gov/reactors/advanced.html.

NRC (U.S. Nuclear Regulatory Commission). 2013c. "Tennessee Valley Authority (TVA) Clinch River Site." Washington, D.C. Available at http://www.nrc.gov/reactors/advanced/clinch-river.html.

NRC (U.S. Nuclear Regulatory Commission). 2013d. "Status of License Renewal Applications and Industry Activities." Washington, D.C. Available at http://www.nrc.gov/reactors/operating/licensing/renewal/applications.html.

NRC (U.S. Nuclear Regulatory Commission). 2013e. *2013–2014 Information Digest*. NUREG–1350, Volume 25, Washington, D.C. Accession No. ML13241A207

OMB (Office of Management and Budget). 2003. *Circular A–4: Regulatory Analysis*. NRC000060, Washington, D.C. Accession No. ML11231A834.

PFS (Private Fuel Storage). 2012. Letter from R.M. Palmberg to NRC, dated December 20, 2012, regarding "Termination of NRC License No. SNM–2513 for Private Fuel Storage LLC." La Crosse, Wisconsin. Accession No. ML12356A063.

Sciacca, F. 1992. *Generic Cost Estimates: Abstracts from Generic Studies for Use in Preparing Regulatory Impact Analyses*. NUREG/CR−4627, Revision 2, Science and Engineering Associates, Inc., Albuquerque, New Mexico. Accession No. ML13137A259.

TVA (Tennessee Valley Authority). 2011. *TVA Voluntary Response to RIS 2011–02.* Chattanooga, Tennessee. Accession No. ML110840713.

8.0 Summary of Environmental Impacts of Continued Storage

The environmental impact determinations in this generic environmental impact statement (GEIS) will be incorporated in the environmental reviews performed by the U.S. Nuclear Regulatory Commission (NRC) for future license applications, as appropriate. Doing so will provide the decisionmaker with a complete picture of the environmental impacts of a proposed licensing action. The analysis in this chapter, therefore, addresses requirements of the National Environmental Policy Act of 1969, as amended (NEPA) for environmental reviews of future licensing actions, with respect to spent nuclear fuel (spent fuel) storage after a reactor's licensed life for operation (continued storage): (1) environmental effects of continued storage, including those that are adverse and unavoidable; (2) irreversible and irretrievable commitments of resources associated with continued storage; and 3) the relationship between local uses of the environment and long-term productivity with respect to continued storage.[1]

The NRC's regulations under Title 10 of the *Code of Federal Regulations* (CFR) Part 51 implement NEPA requirements. Section 102(2)(C) of NEPA requires that environmental impact statements (EISs)—including those prepared to support NRC licensing actions—must contain the following information:

- any adverse environmental effects that cannot be avoided, should the licensing action be implemented,
- any irreversible and irretrievable commitments of resources that would be involved in the licensing action should it be implemented, and
- the relationship between local short-term uses of the environment and the maintenance and enhancement of long-term productivity.

As discussed in Chapter 1, and as applied throughout this GEIS, significance categories for potential environmental impacts are characterized as follows:

> SMALL—The environmental effects are not detectable or are so minor that they will neither destabilize nor noticeably alter any important attribute of the resource.
>
> MODERATE—The environmental effects are sufficient to alter noticeably, but not to destabilize, important attributes of the resource.

[1] As explained in Chapter 1, the environmental impact determinations summarized in this chapter provide the regulatory basis for the proposed action: adopting a revision to 10 CFR Part 51 to codify the determinations of the GEIS. This rulemaking is not a licensing action and does not authorize continued storage or the creation of spent fuel. The environmental impacts of the rulemaking are addressed in Chapter 1 and Chapter 7.

LARGE—The environmental effects are clearly noticeable and are sufficient to destabilize important attributes of the resource.

For some resource areas, the impact determination language is specific to the authorizing regulation, executive order, or guidance.

8.1 Summarized Environmental Impacts of Continued Storage

The tables in this section summarize the environmental impacts from continued storage considered elsewhere in this GEIS. The environmental impacts related to at-reactor continued storage are described in Chapter 4 and are summarized by timeframe in Table 8-1. Impacts associated with away-from-reactor continued storage are described in Chapter 5 and are summarized by timeframe in Table 8-2. Cumulative impacts associated with continued storage when considered along with the impacts of other past, present, and reasonably foreseeable future actions are described in Chapter 6 and summarized with the incremental impacts from Chapters 4 and 5 in Table 8-3.

Table 8-1. Summary of Environmental Impacts of Continued At-Reactor Storage

Resource Area	Short-Term Storage	Long-Term Storage	Indefinite Storage
Land Use	SMALL	SMALL	SMALL
Socioeconomics	SMALL	SMALL	SMALL
Environmental Justice	Disproportionately high and adverse impacts are not expected.		
Air Quality	SMALL	SMALL	SMALL
Climate Change	SMALL	SMALL	SMALL
Geology and Soils	SMALL	SMALL	SMALL
Surface-Water Quality and Use	SMALL	SMALL	SMALL
Groundwater Quality and Use	SMALL	SMALL	SMALL
Terrestrial Resources	SMALL	SMALL	SMALL
Aquatic Ecology	SMALL	SMALL	SMALL
Special Status Species and Habitat	Impacts for Federally listed threatened and endangered species and Essential Fish Habitat would be determined as part of the consultations for the Endangered Species Act and the Magnuson–Stevens Fishery Conservation and Management Act.		
Historic and Cultural Resources	SMALL	SMALL to LARGE	SMALL to LARGE
Noise	SMALL	SMALL	SMALL
Aesthetics	SMALL	SMALL	SMALL
Waste Management			
LLW	SMALL	SMALL	SMALL
Mixed Waste	SMALL	SMALL	SMALL
Nonradioactive Waste	SMALL	SMALL	SMALL to MODERATE

Table 8-1. Summary of Environmental Impacts of Continued At-Reactor Storage (cont'd)

Resource Area	Short-Term Storage	Long-Term Storage	Indefinite Storage
Transportation	SMALL	SMALL	SMALL
Public and Occupational Health	SMALL	SMALL	SMALL
Accidents	SMALL	SMALL	SMALL
Sabotage or Terrorism	SMALL	SMALL	SMALL

Table 8-2. Summary of Environmental Impacts of Continued Storage at an Away-from-Reactor Independent Spent Fuel Storage Installation

Resource Area	Short-Term Storage	Long-Term Storage	Indefinite Storage
Land Use	SMALL	SMALL	SMALL
Socioeconomics	SMALL (adverse) to LARGE (beneficial)	SMALL (adverse) to LARGE (beneficial)	SMALL (adverse) to LARGE (beneficial)
Environmental Justice	Disproportionately high and adverse impacts are not expected.		
Air Quality	SMALL to MODERATE	SMALL	SMALL
Climate Change	SMALL	SMALL	SMALL
Geology and Soils	SMALL	SMALL	SMALL
Surface-Water Quality and Use	SMALL	SMALL	SMALL
Groundwater Quality and Use	SMALL	SMALL	SMALL
Terrestrial Resources	SMALL to MODERATE	SMALL	SMALL
Aquatic Ecology	SMALL	SMALL	SMALL
Special Status Species and Habitat	Impacts for Federally listed threatened and endangered species and Essential Fish Habitat would be determined as part of the consultations for the Endangered Species Act and the Magnuson–Stevens Fishery Conservation and Management Act.		
Historic and Cultural Resources	SMALL to LARGE	SMALL to LARGE	SMALL to LARGE
Noise	SMALL	SMALL	SMALL
Aesthetics	SMALL to MODERATE	SMALL to MODERATE	SMALL to MODERATE
Waste Management			
LLW	SMALL	SMALL	SMALL
Mixed Waste	SMALL	SMALL	SMALL
Nonradioactive Waste	SMALL	SMALL	SMALL to MODERATE
Transportation	SMALL to MODERATE	SMALL to MODERATE	SMALL to MODERATE
Public and Occupational Health	SMALL	SMALL	SMALL
Accidents	SMALL	SMALL	SMALL
Sabotage or Terrorism	SMALL	SMALL	SMALL

Table 8-3. Summary of the Cumulative Impacts from Continued Storage When Added to Other Federal and Non-Federal Activities

Resource Area	Incremental Impact from At-Reactor Storage	Incremental Impact from Away-from-Reactor Storage	Cumulative Impact from Continued Storage and other Federal and Non-Federal Activities
Land Use	SMALL	SMALL	SMALL to MODERATE
Socioeconomics	SMALL	SMALL (adverse) to LARGE (beneficial)	SMALL to LARGE
Environmental Justice	Disproportionately high and adverse impacts are not expected.		
Air Quality	SMALL	SMALL to MODERATE	SMALL to MODERATE
Climate Change	SMALL	SMALL	MODERATE
Geology and Soils	SMALL	SMALL	SMALL to MODERATE
Surface-Water Quality and Use	SMALL	SMALL	SMALL to LARGE
Groundwater Quality and Use	SMALL	SMALL	SMALL to LARGE
Terrestrial Resources[(a)]	SMALL	SMALL to MODERATE	SMALL to MODERATE
Aquatic Ecology[(a)]	SMALL	SMALL	SMALL to LARGE
Historic and Cultural Resources	SMALL to LARGE	SMALL to LARGE	SMALL to LARGE
Noise	SMALL	SMALL	SMALL to MODERATE
Aesthetics	SMALL	SMALL to MODERATE	SMALL to MODERATE
Waste Management	SMALL to MODERATE	SMALL to MODERATE	SMALL to LARGE
Transportation	SMALL	SMALL to MODERATE	SMALL to MODERATE
Public and Occupational Health	SMALL	SMALL	SMALL
Accidents	SMALL	SMALL	SMALL

(a) Cumulative impacts on Federally listed threatened and endangered species and Essential Fish Habitat would be determined as part of consultations for the Endangered Species Act and the Magnuson–Stevens Fishery Conservation and Management Act.

8.2 Unavoidable Adverse Environmental Impacts of Continued Storage

Section 102(2)(C)(ii) of NEPA requires that EISs—including those prepared to support NRC licensing actions—must contain information about any adverse environmental effects that cannot be avoided if an action is implemented.

For the purposes of the analysis in this chapter, unavoidable adverse environmental impacts are those potential impacts of continued storage that cannot be avoided due to constraints inherent in using at-reactor and away-from-reactor spent fuel storage facilities for continued storage. The unavoidable adverse environmental impacts associated with continued storage would

include impacts of (1) short-term storage in a spent fuel pool, as well as (2) short-term storage, (3) long-term storage, and (4) indefinite dry storage in at-reactor and away-from-reactor independent spent fuel storage installations (ISFSIs). The short-term storage timeframe assumes that a repository becomes available by 60 years after the end of the reactor's licensed life for operation. The long-term storage timeframe assumes that a repository becomes available by 160 years after the end of the reactor's licensed life for operation. The indefinite storage timeframe assumes that a repository does not become available and that the spent fuel is stored in an at-reactor or away-from-reactor ISFSI indefinitely. As discussed in Chapter 1 and Appendix B of this GEIS, the NRC believes that the most likely outcome is that a repository will become available by the end of the short-term timeframe, or within 60 years after the end of the reactor's licensed life for operation.

The short-term storage timeframe involves continued operation of at-reactor spent fuel pool storage and dry storage at an at-reactor or away-from-reactor ISFSI until a repository is available. The long-term storage timeframe involves construction and operation of a dry transfer system (DTS), continued operation of an at-reactor or away-from-reactor ISFSI, and replacement of these facilities within the 100-year period until a repository is available. Indefinite storage continues at an at-reactor or away-from-reactor ISFSI in perpetuity with continued aging management activities and the assumed replacement of the ISFSI and DTS every 100 years.

The potential impacts from the activities occurring within the three continued-storage timeframes on each resource area are described in Chapter 4 for at-reactor storage and in Chapter 5 for away-from-reactor storage. Table 8-1 and Table 8-2 summarize the adverse environmental impacts for each resource area. For at-reactor storage, the unavoidable adverse environmental impacts for each resource area across all timeframes are SMALL with the exception of waste-management impacts in the indefinite storage timeframe, which are SMALL to MODERATE, and historic and cultural resource impacts in the long-term and indefinite storage timeframes, which are SMALL to LARGE. These elevated impact conclusions are influenced, in part, by the uncertainties regarding the specific circumstances of continued storage over lengthy timeframes, including site-specific characteristics that could affect the intensity of potential environmental impacts, and the resulting analysis assumptions that have been made by the NRC as documented in detail in Chapter 4. The potentially MODERATE waste-management impacts are associated with the volume of nonhazardous solid waste generated by assumed facility-replacement activities for only the indefinite timeframe. The NRC considered a range of potential impacts on historic and cultural resources in the GEIS to account for varying scenarios. As discussed in Section 3.11, less-developed or disturbed portions of a power plant site, including areas that were used to support construction of the at-reactor ISFSI, could still contain unknown historic and cultural resources. However, the NRC recognizes that there is uncertainty associated with the degree of prior disturbances and what resources, if any, are present in areas where future ground-disturbing activities (e.g., initial and replacement DTS and

replacement ISFSI) could occur. The NRC cannot eliminate the possibility that historic and cultural resources would be affected by construction activities during the long-term and indefinite timeframes because the initial ISFSI could be located within a less-disturbed area with historic and cultural resources in close proximity. Further, resources may be present that would not have been considered significant at the time the initial or replacement facilities were constructed, but could become significant in the future. The analysis concluded with an impact range from SMALL to LARGE. Therefore, generic summarization as a range is appropriate.

For some resource areas the impact determination language is specific to the authorizing regulation, executive order, or guidance. For special status species, impacts would be determined as part of consultations pursuant to Endangered Species Act Section 7 and the Magnuson–Stevens Fishery Conservation and Management Act, as amended. Continued at-reactor storage is not expected to cause disproportionately high and adverse human health and environmental effects on minority and low-income populations. In addition, as indicated in the Commission's policy statement, environmental justice impacts would be considered during site-specific environmental reviews for specific licensing actions.

For away-from-reactor storage, the unavoidable adverse environmental impacts over all timeframes would be SMALL for most resource areas, and SMALL to MODERATE for air quality, terrestrial ecology, aesthetics, waste management, and transportation. Socioeconomics impacts would range from SMALL (adverse) to LARGE (beneficial), and historic and cultural resource impacts could be SMALL to LARGE. The potential MODERATE impacts on air, terrestrial wildlife, and transportation are based on potential construction-related fugitive-dust emissions, terrestrial wildlife direct and indirect mortalities, terrestrial habitat loss, and temporary construction traffic impacts. The potential MODERATE impacts on aesthetics and waste management are based on noticeable changes to the viewshed from constructing a new ISFSI and the volume of nonhazardous solid waste generated by assumed ISFSI and DTS replacement activities for only the indefinite timeframe. Potential LARGE (beneficial) impacts on socioeconomics would be due to local economic tax revenue increases from an away-from-reactor ISFSI. The MODERATE or LARGE impacts on historic and cultural resources could result if historic and cultural resources are present at a site and, because they cannot be avoided, are impacted by ground-disturbing activities during a particular timeframe. The NRC believes that it is reasonable to assume that the replacement ISFSI and the initial and replacement DTS would be constructed near the existing ISFSI because the licensee would have already characterized and selected the existing ISFSI site to meet NRC siting, safety, and security requirements. Further, the NRC believes that it is reasonable to assume that licensees would generally avoid siting and operating an ISFSI away from the existing licensed area or outside previously characterized areas. The NRC recognizes that there is uncertainty associated with the degree of prior disturbance and what resources, if any, are present in areas where future ground-disturbing activities could occur. The NRC cannot eliminate the possibility that historic and cultural resources would be affected by construction activities because the

initial ISFSI could be located within a less-disturbed area with historic and cultural resources in close proximity. Further, resources may be present after initial construction of the away-from-reactor ISFSI that would not have been considered significant at the time the initial or replacement facilities were constructed, but could become significant in the future. Specifically, these potential historic and cultural resource impacts vary depending on where the facilities are sited, what resources are present, the extent of proposed land disturbance, whether the area has been previously surveyed, and whether the licensee has management plans and procedures that are protective of historic and cultural resources.

Impacts on Federally listed species, designated critical habitat, and essential fish habitat would be based on site-specific conditions and determined as part of consultations pursuant to Endangered Species Act Section 7 and the Magnuson–Stevens Fishery Conservation and Management Act, as amended. Continued storage at an away-from-reactor ISFSI is not expected to cause disproportionately high and adverse human health and environmental effects on minority and low-income populations. In addition, as indicated in the Commission's policy statement, environmental justice impacts would be considered during site-specific environmental reviews for specific licensing actions.

8.3 Irreversible and Irretrievable Commitments of Resources Associated with Continued Storage

Section 102(2)(C)(v) of NEPA requires that EISs—including those prepared to support NRC licensing actions—must contain information about irreversible and irretrievable commitments of resources that would occur if an action is implemented. The NRC guidance in NUREG−1748, *Environmental Review Guidance for Licensing Actions Associated with NMSS Programs* (NRC 2003), defines an irreversible commitment as the commitment of environmental resources that cannot be restored. In addition, an irretrievable commitment refers to the commitment of material resources that once used cannot be recycled or restored for other uses by practical means. For purposes of application to environmental reviews associated with future licensing actions, this section addresses the irreversible and irretrievable commitments of resources that would occur as a result of continued storage.

Impacts on land use, terrestrial ecology, aquatic ecology, aesthetics, historic and cultural resources, and waste management would result in irreversible commitments; and replacement of ISFSI components and transportation would result in irretrievable commitments. As finite resources, the loss of historic and cultural resources would constitute irreversible impacts. For the indefinite storage timeframe, land and visual resources allocated for spent fuel storage would be committed in perpetuity because continued operations would preempt other productive land uses, including use as terrestrial ecological habitat, and permanently affect the viewshed. The area of land that would be occupied by at-reactor ISFSI is assumed to be 2.4 ha (6 ac) for both ISFSI and DTS facilities (Section 2.1.2.2) or 330 ha (820 ac) for an away-from-reactor

ISFSI (Section 2.1.3). Waste-management activities involving waste treatment, storage, and disposal would result in irreversible commitment of capacity for waste disposal. The largest volume of waste requiring disposal during continued storage would be nonradiological demolition waste (primarily concrete) from replacement of an away-from-reactor ISFSI (308,000 m^3 [403,000 yd^3]), as described in Section 5.15.2. ISFSI replacement activities would also generate canister waste that would have to be disposed at an approved low-level waste facility (there would be approximately 4,000 canisters at an away-from-reactor ISFSI, as described in Section 5.15.2). Transportation activities would involve irretrievable commitment of resources including vehicle fuel for commuting workers and shipping activities. The commitment of resources for construction of storage facilities and transportation is not expected to have a significant impact relative to the availability of these resources.

8.4 Relationship Between Short-Term Uses of the Environment for Continued Storage and the Maintenance and Enhancement of Long-Term Productivity

Section 102(2)(C)(iv) of NEPA requires that EISs—including EISs prepared to support NRC licensing actions—must contain information about the relationship between local short-term uses of the environment and the maintenance and enhancement of long-term productivity. For the purpose of this section, the NRC considers the relationship between local short-term uses of the environment and the maintenance and enhancement of long-term productivity that occurs from continued storage as may be authorized by future licensing actions.

Consistent with the NRC guidance in NUREG–1748 (NRC 2003), the short-term use period evaluated in this section is the period of time encompassing all continued storage activities defined in Chapter 1 (i.e., the period of analysis of environmental impacts evaluated by the three timeframes in Chapters 4 and 5 of this GEIS). In addition, the long-term productivity period evaluated in this section is the time period beyond continued storage (i.e., based on the NRC guidance in NUREG–1748, the period beyond the future licensing action under review). With respect to the indefinite storage timeframe, however, there is no time period beyond continued storage. As discussed in Chapter 1 and Appendix B of this GEIS, the NRC believes that the most likely outcome is that a repository will become available to accept the spent fuel generated by a reactor by the end of the short-term timeframe, or 60 years after the end of the reactor's licensed life for operation. Because the short-term timeframe is the most likely timeframe, the long-term productivity period considered in this chapter for the indefinite storage timeframe is assumed to begin at the end of the long-term storage timeframe evaluated in Chapters 4 and 5.

The local short-term use of the human environment is summarized in terms of the unavoidable adverse environmental impacts and irreversible and irretrievable commitments of resources summarized in Sections 8.2 and 8.3 and Table 8-1 and Table 8-2. With the exception of the

consumption of depletable resources resulting from the evaluated construction and operations activities, these uses may be classified as short-term.

The maximum long-term impact on productivity would result when an at-reactor or away-from-reactor ISFSI is not immediately dismantled at the end of storage operations, or, as with the indefinite storage timeframe, it remains in operation indefinitely. Consequently, the land occupied by an ISFSI would not be available for any other uses. Most long-term impacts resulting from land-use preemption by ISFSI structures can be eliminated by removing these structures or by converting them to productive uses. Once continued storage ends, the facilities and associated land areas would be decommissioned according to NRC regulations. Once decommissioning is complete, and the NRC license is terminated, the site would be available for other uses. Other potential long-term impacts on productivity include the commitment of land and consumption of disposal capacity necessary to meet waste disposal needs. This commitment of land for disposal would remove land from productive use. In addition, because loss of historic and cultural resources would constitute irreversible impacts, any loss of historic and cultural resources during continued storage would persist as long-term impacts. A small contribution to greenhouse gas emissions would add to the atmospheric burden of emissions that could contribute to potential long-term impacts.

8.5 References

10 CFR Part 51. *Code of Federal Regulations*, Title 10, *Energy,* Part 51, “Environmental Protection Regulations for Domestic Licensing and Related Regulatory Functions.” Washington, D.C.

59 FR 7629. February 16, 1994. “Executive Order 12898: Federal Actions to Address Environmental Justice in Minority Populations and Low-Income Populations.” *Federal Register*, Executive Office of the President, Washington, D.C.

Endangered Species Act of 1973 (ESA). 16 USC 1531 *et seq*.

Magnuson–Stevens Fishery Conservation and Management Act of 1976, as amended. 16 USC 1801 *et seq*.

National Environmental Policy Act of 1969 (NEPA), as amended. USC 4321 *et seq*.

NRC (U.S. Nuclear Regulatory Commission). 2003. *Environmental Review Guidance for Licensing Actions Associated with NMSS Programs*. NUREG−1748, Washington, D.C. Accession No. ML032450279.

9.0 List of Preparers

The overall responsibility for the preparation of this *Generic Environmental Impact Statement* (GEIS) was assigned to the Office of Nuclear Material Safety and Safeguards (NMSS), U.S. Nuclear Regulatory Commission (NRC). NMSS had assistance from other NRC organizations as well as the Pacific Northwest National Laboratory (PNNL) and the Center for Nuclear Waste Regulatory Analyses (CNWRA). Tables 9-1 through 9-3 provide a listing of the NRC, CNWRA, and PNNL staff involved, their experience, and their role in preparing this GEIS.

Table 9-1. List of Preparers—NRC

Name	NRC Office	Experience	Function or Expertise
David Brown	NMSS	B.S., Physics, Muhlenberg College, 1990 M.S., Environmental Health Physics, Clemson University, 1993 Years of Relevant Experience: 21	Air quality, climate change, surface water, groundwater, transportation, public and occupational health, accidents and safeguards
Ralph Cady	RES	B.S., Geology, University of Connecticut, 1974 M.A., Geology, University of Connecticut, 1976 Ph.D., Hydrology, University of Arizona, 1989 Years of Relevant Experience: 25	Spent fuel pool leaks
Keith Compton	RES	B.S., Physics, Rhodes College, 1986 Ph.D., Environmental Engineering and Science, Clemson University, 2001 Years of relevant experience: 23	Spent fuel pool fires
Jennifer Davis	NMSS	B.A, Historic Preservation and Classical Civilization (Archaeology); Mary Washington College, 1996. 2 years of fieldwork; 12 years of experience in NEPA compliance, project management, historic and cultural resource impact analysis and regulatory compliance	Historic and cultural resources, socioeconomics, environmental justice, land use, noise
Kevin Folk	NRR	B.A., Geoenvironmental Studies, Shippensburg University, 1989 MS., Environmental Biology, Hood College, 1997 Years of Relevant Experience: 25	Air quality, geology, hydrology, noise
Michelle Hart	NRO	B.S., Physics, Muskingum College, 1991 M.S., Nuclear Engineering, Ohio State University, 1994 Years of Relevant Experience: 18	Accidents
Donald Helton	RES	B.S., Nuclear Engineering, North Carolina State University, 1999 M.S., Nuclear Engineering, Texas A&M University, 2002 Years of Relevant Experience: 11	Spent fuel pool fires
Merri Horn	NMSS	B.S., Physics, Eastern Illinois University, 1980 M.S., Environmental Systems Engineering, Clemson University, 1987 Years of Relevant Experience: 30	Rule, repository feasibility, and continued safe storage feasibility
Andrew Kugler	NRO	B.S., Mechanical Engineering, Cooper Union, 1978 M.S., Technical Management, Johns Hopkins, 1998 Years of Relevant Experience: 35	Away-from-reactor impacts, GEIS assumptions
Stacey Imboden	NRO	B.S., Pennsylvania State University, 1999 M.S., Clemson University, 2001 Years of Relevant Experience: 13	Climate change

Table 9-1. List of Preparers—NRC (cont'd)

Name	NRC Office	Experience	Function or Expertise
Emily Larson	NRR	B.A., Anthropology (major, emphasis archaeology) and History (minor), University of Minnesota, 2004; M.A., Archaeology, Bangor University, 2006 Years of Relevant Experience: 1 year of fieldwork; 2.5 years of experience in NEPA compliance; historic and cultural resource impact analysis and regulatory compliance	Historic and cultural resources
Sarah Lopas	NMSS	B.A., Molecular Biology, Lehigh University, 2001 MPA, Environmental Science and Policy, Columbia University, 2006 Years of Relevant Experience: 12	Executive summary, outreach
Timothy McCartin	NMSS	B.S., Physics, Xavier University, 1973 M.S., Physics, Wayne State University, 1976 Over 31 years' experience evaluating safety and regulatory compliance of geological disposal facilities	Public and occupational health, accidents and safeguards, repository feasibility and continued safe storage feasibility, Rule
Paul Michalak	NMSS	B.S., Education, Temple University, 1978 M.S., Hydrology, New Mexico Institute of Mining and Technology, 1989 Years of Relevant Experience: 26	Spent fuel pool leaks
Michelle Moser	NRR	B.S., Environmental Sciences, Brown University, 2002 M.S., Biological Sciences, Stanford University, 2005 10 years of experience in ecological research and aquatic ecology, 8 years of experience in cumulative impact assessment and NEPA compliance	Ecology, cumulative impacts
Jessie Muir Quintero	NMSS	B.S., Biosystems Engineering, Clemson University, 2000 M.S., Environmental Engineering and Science, Clemson University, 2002 4 years in environmental compliance and solid waste management, 7 years in NEPA compliance and project management	Project manager, executive summary, Chapter 1
Tom Nicholson	RES	B.S., Geological Sciences, Pennsylvania State University, 1972 M.S., Geology, Stanford University, 1976 Professional Geologist, Indiana Certified Professional Hydrogeologist, AIH Years of Relevant Experience: 39	Senior technical advisor for radionuclide transport in the environment

Table 9-1. List of Preparers—NRC (cont'd)

Name	NRC Office	Experience	Function or Expertise
Jeffrey Rikhoff	NRR	M.R.P., Regional Planning, University of Pennsylvania, 1988 M.S., Economic Development and Appropriate Technology, University of Pennsylvania, 1987 B.A., English (Composition), DePauw University, 1980 Years of Relevant Experience: 26 years of experience in NEPA compliance, socioeconomics and environmental justice impact analysis, cultural resource impacts, and comprehensive land-use and development planning	Socioeconomics, environmental justice
Robert Schaaf	NRO	B., Mechanical Engineering, Georgia Institute of Technology, 1988 Years of Relevant Experience: 24	GEIS Assumptions
Andrew Stuyvenberg	NMSS	B.S., Biochemistry/Molecular Biology and Political Science, Marquette University, 2002 M.E.M., Environmental Economics and Policy, Duke University, 2005 J.D., Georgetown University Law Center Years of Relevant Experience: 9	NEPA alternatives, NEPA process, cost-benefit analysis
Michael Wentzel	NMSS	B.S., Microbiology, University of Texas, 1997 Years of Relevant Experience: 16	Ecological resources, aesthetics, spent fuel pool leaks and fires

NRO = Office of New Reactors.
NRR = Office of Nuclear Reactor Regulation.
NSIR = Office of Nuclear Security and Incident Response.
RES = Office of Nuclear Regulatory Research.

Table 9-2. List of Preparers—CNWRA

Name	Experience	Function or Expertise
Hakan Basagaoglu	B.S., Geologic Engineering, Middle East Technical University, Turkey, 1991 M.S., Geologic Engineering, Middle East Technical University, Turkey, 1993 Ph.D., Civil and Environmental Engineering, University of California Davis, 2000 Years of Relevant Experience: 3	Groundwater
Amitava Ghosh	B.Tech., Mining Engineering, Indian Institute of Technology, 1978 M.S., Mining Engineering, University of Arizona, 1983 Ph.D., Mining Engineering, University of Arizona, 1990 Years of Relevant Experience: 13	Natural events and accidents
Amy Hester	B.A., Environmental Studies, University of Kansas, 1998 Years of Relevant Experience: 14	Terrestrial resources
Lane Howard	B.S., Civil Engineering, Texas A&M University, 1988 M.S., Nuclear Engineering, Texas A&M University, 1995 Years of Relevant Experience: 23	Public and occupational health
Miriam Juckett	B.A., Chemistry, University of Texas San Antonio, 2003 M.S., Environmental Sciences, University of Texas San Antonio, 2006 Years of Relevant Experience: 11	Communications, scoping, and outreach
Patrick LaPlante	B.S., Environmental Studies, Western Washington University, 1988 M.S., Biostatistics and Epidemiology, Georgetown University, 1994 Years of Relevant Experience: 25	Transportation
Todd Mintz	B.S., Chemical Engineering, Washington University St. Louis, 1998 Ph.D., Materials Science and Engineering, University of California Berkeley, 2003 Years of Relevant Experience: 2	Spent fuel pool fires
Marla Morales	B.A., Geology, Vanderbilt University, 2001 M.S., Geology, University of Texas San Antonio, 2007 Years of Relevant Experience: 13	Socioeconomics, environmental justice, geology, and soils
James Myers	B.S., Geology, Michigan State University, 1985 M.S., Geophysical Sciences, Georgia Institute of Technology, 1990 Ph.D., Environmental Science and Engineering, Clemson University, 2004 Years of Relevant Experience: 21	Solid waste management
Olufemi Osidele	B.S., Civil Engineering, University of Ife, Nigeria, 1987 M.S., Hydrology for Environmental Management, University of London, England, 1992 Ph.D., Environmental Systems Analysis, University of Georgia, 2001 Years of Relevant Experience: 19	Surface water

Table 9-2. List of Preparers—CNWRA (cont'd)

Name	Experience	Function or Expertise
Roberto Pabalan	B.S., Geology, University of the Philippines, 1976 Ph.D., Geochemistry and Mineralogy, Pennsylvania State University, 1986 Years of Relevant Experience: 16	Spent fuel pool leaks
Robert Pauline	B.S., Biology, Bates College, 1989 M.S., Biology, George Mason University, 1999 Years of Relevant Experience: 8	Scoping
English Pearcy	B.S., Geology, Furman University, 1983 M.S., Geology, Harvard University, 1985 Ph.D., Geology, Harvard University, 1989 Years of Relevant Experience: 24	Aesthetics
James Prikryl	B.S., Geology, University of Texas, 1984 M.S., Geology, University of Texas, 1989 Years of Relevant Experience: 24	Land use
David Turner	B.A. in Music/Geology, College of William and Mary, 1981 M.S. in Geology, University of Utah, 1985 Ph.D. in Geology, University of Utah, 1990 Years of Relevant Experience: 24	Cumulative impacts
Bradley Werling	B.A., Engineering Physics, Westmont College, 1985 B.S., Chemistry, Southwest Texas State University, 1999 M.S., Environmental Science, University of Texas San Antonio, 2000 Years of Relevant Experience: 19	Noise, air quality, climate change

Table 9-3. List of Preparers—PNNL

Name	Experience	Function or Expertise
Eva Hickey	B.S., Biology with Health Physics option, Virginia Polytechnic Institute and State University, 1978 M.S., Health Physics, Georgia Institute of Technology, 1980 Years of Relevant Experience: 35	Accidents
Tara O'Neil	B.A., Anthropology with an emphasis on Archaeology, Oregon State University, 1992 MBA, University of Phoenix, 2009 Years of Relevant Experience: 22	Historic and Cultural Resources
Terri Miley	B.S. Mathematics, University of South Carolina, 1982 M.S. Mathematics, University of South Carolina, 1986 Years of Relevant Experience: 27	Appendix D

10.0 Index

A

Accident, xxviii, xlvi, xlvii, xlviii, lviii, lix, lxi, lxiv, 2-13, 2-23, 2-39, 3-42, 4-3, 4-18, 4-66, 4-67, 4-71, 4-72, 4-73, 4-74, 4-75, 4-76, 4-79, 4-80, 4-81, 4-82, 4-83, 4-84, 4-85, 4-86, 4-88, 4-89, 4-90, 4-91, 4-92, 4-97, 4-98, 4-104, 4-105, 4-109, 5-19, 5-51, 5-52, 5-54, 5-55, 5-56, 5-57, 5-58, 5-59, 6-51, 6-52, 6-53, 6-55, 6-56, 6-57, 6-59, 6-63, 8-3, 8-4, 9-2, 9-3, 9-5, 9-6, 11-1, 11-5, 11-7, 11-17, 11-18, 11-19, B-4, B-12, B-13, B-14, B-16, B-17, B-20, B-21, B-26, B-30, B-32, B-36, B-37, B-39, B-41, D-5, D-6, D-21, D-22, D-25, D-59, D-68, D-69, D-70, D-71, D-86, D-94, D-95, D-96, D-99, D-104, D-109, D-115, D-124, D-125, D-127, D-129, D-131, D-132, D-133, D-136, D-137, D-144, D-145, D-147, D-148, D-149, D-155, D-160, D-161, D-171, D-175, D-185, D-187, D-190, D-191, D-209, D-212, D-218, D-219, D-220, D-225, D-264, D-265, D-278, D-279, D-280, D-281, D-282, D-283, D-284, D-287, D-289, D-290, D-291, D-293, D-294, D-295, D-296, D-297, D-298, D-299, D-300, D-308, D-310, D-312, D-313, D-314, D-315, D-316, D-317, D-318, D-319, D-320, D-321, D-322, D-323, D-324, D-325, D-326, D-327, D-328, D-329, D-330, D-331, D-332, D-333, D-334, D-335, D-336, D-337, D-338, D-339, D-340, D-341, D-344, D-345, D-346, D-347, D-348, D-349, D-350, D-352, D-355, D-360, D-361, D-366, D-368, D-385, D-386, D-387, D-391, D-393, D-396, D-397, D-398, D-402, D-403, D-404, D-410, D-411, D-417, D-418, D-419, D-420, D-421, D-422, D-423, D-426, D-427, D-429, D-430, D-433, D-434, D-435, D-436, D-438, D-439, D-440, D-442, D-443, D-444, D-445, D-446, D-447, D-449, D-450, D-451, D-452, D-453, D-461, D-467, D-469, D-484, D-485, D-491, D-493, D-495, D-496, D-498, D-499, D-500, D-501, D-507, D-508, D-509, D-514, D-520, D-521, D-527, D-528, D-530, D-533, D-535, D-538, D-539, D-540, D-541, D-542, D-543, D-544, D-545, D-546, D-547, D-606, D-614, D-616, D-617, D-620, D-621, D-626, D-627, D-632, D-633, E-1, E-4, E-9, F-1, F-2, F-3, F-4, F-5, F-6, F-7, F-8, F-9, F-10, F-11, F-12, F-13, F-14, F-15, F-16, F-17, F-18, F-19, F-20, F-21, I-2, I-5, I-7

Aesthetics, xxxiv, xxxv, xliv, xlviii, xlix, lvi, lix, lxi, lxii, 3-9, 3-30, 3-34, 4-57, 4-58, 4-59, 4-98, 5-13, 5-14, 5-43, 5-44, 5-45, 5-58, 5-59, 6-43, 6-44, 6-45, 6-58, 8-2, 8-3, 8-4, 8-6, 8-7, 9-4, 9-6, 11-1, 11-6, D-5, D-182, D-183, D-185, D-268

Aging management, xlv, lii, lvi, 1-16, 2-29, 2-31, 4-6, 4-69, 5-7, 5-9, 5-10, 5-14, 5-18, 5-21, 5-23, 5-28, 5-29, 5-30, 5-33, 5-37, 5-42, 5-43, 5-44, 5-52, 5-55, 8-5, 11-1, 11-13, B-17, B-18, B-19, B-20, B-22, B-25, B-28, B-32, B-42, D-31, D-32, D-132, D-159, D-173, D-181, D-286, D-303, D-314, D-390, D-395, D-402, D-413, D-415, D-463, D-464, D-468, D-469, D-473, E-5, I-8

Air quality, xxxiv, xxxv, xxxvii, xlvii, xlix, l, lix, lx, 3-11, 3-13, 3-43, 3-44, 4-3, 4-14, 4-15, 4-16, 4-17, 4-18, 4-34, 4-98, 5-5, 5-13, 5-15, 5-16, 5-17, 5-18, 5-58, 5-59, 6-18, 6-19, 6-20, 6-58, 8-2, 8-3, 8-4, 8-6, 9-2, 9-6,

11-1, 11-4, 11-9, 11-15, D-5, D-207, D-208, D-209, D-210, D-528
Alternative, xxiii, xxvi, xxviii, xxix, lvii, lxv, 1-6, 1-9, 1-10, 1-11, 1-25, 2-33, 2-34, 4-72, 4-105, 5-28, 5-36, 6-22, 7-1, 7-4, 7-6, 7-11, 7-14, 7-17, 9-4, 11-1, 11-6, 11-9, 11-15, B-24, B-30, D-5, D-13, D-14, D-37, D-38, D-41, D-42, D-46, D-48, D-50, D-60, D-61, D-71, D-72, D-73, D-74, D-77, D-79, D-80, D-81, D-82, D-83, D-85, D-86, D-87, D-88, D-89, D-90, D-91, D-92, D-93, D-94, D-98, D-100, D-104, D-106, D-107, D-109, D-110, D-111, D-112, D-113, D-114, D-115, D-116, D-117, D-118, D-119, D-120, D-121, D-122, D-123, D-124, D-125, D-126, D-128, D-143, D-144, D-152, D-153, D-154, D-176, D-182, D-193, D-316, D-317, D-322, D-323, D-330, D-351, D-357, D-358, D-361, D-368, D-420, D-450, D-462, D-498, D-499, D-500, D-503, D-518, D-524, D-526, D-535, D-536, D-546, D-547, D-551, E-17, F-16, F-19, H-1, H-6
Aquifer, 3-17, 3-18, 4-25, 4-26, 6-28, 6-30, 11-2, 11-11, D-130, D-225, D-234, D-240, D-273, D-274, D-456, D-457, D-481, D-482, D-485, E-12, E-13, E-14, E-16
Archaeological resource, 3-30, 11-2
Attainment, 3-13, 3-14, 4-15, 4-16, 4-17, 5-15, 5-16, 5-17, 5-18, 11-9

B

Bare fuel, 2-13, 2-24, 2-30, 4-16, 4-82, 5-18, 5-21, 6-9, 6-55, 6-57, 11-2, B-18, D-159, D-160, D-286
Biota, 3-22, 3-23, 4-30, 4-31, 4-39, 4-42, 5-30, 11-1, 11-3, D-222, D-229, D-247, D-249, D-300, D-301, D-307, D-344, D-345, D-456
Boiling water reactor, 2-3, 2-4, 2-5, 2-6, 2-7, 2-8, 2-18, 3-3, 3-36, 4-2, 4-23, 4-79, 4-88, 4-105, 6-48, 11-3, B-12, B-14, B-19, B-42, D-269, D-271, D-314, D-319, D-322, D-354, D-355, D-358, D-424, D-427, D-438, D-446, D-448, D-450, D-453, D-518, D-541, D-542, D-545, D-546, D-617, D-627, D-629, D-632, E-1, E-2, E-3, E-19, E-20, E-22, E-27, F-3, F-17, F-18, F-21, F-22, G-1, G-3, G-4, G-5, G-6, G-7, G-9, G-11, G-13
Burnup, xxviii, 2-8, 2-24, 2-28, 2-33, 4-95, 4-96, 11-3, B-9, B-10, B-12, B-15, B-16, B-19, B-22, B-23, B-33, B-37, D-60, D-63, D-137, D-145, D-180, D-269, D-283, D-284, D-285, D-288, D-317, D-322, D-325, D-334, D-395, D-400, D-401, D-403, D-412, D-413, D-414, D-415, D-424, D-433, D-536, D-537, D-617, D-632, F-18, G-10, G-11, G-13, G-14, G-15, I-1, I-2, I-3, I-4, I-5, I-6, I-7, I-8

C

Cladding, 2-2, 2-7, 2-9, 2-11, 2-33, 2-40, 4-3, 4-63, 4-86, 7-5, 11-3, B-10, B-11, B-12, B-14, B-15, B-16, B-31, D-132, D-157, D-177, D-281, D-282, D-284, D-285, D-287, D-288, D-295, D-317, D-318, D-322, D-333, D-334, D-357, D-359, D-360, D-374, D-393, D-395, D-399, D-401, D-402, D-403, D-404, D-413, D-414, D-418, D-428, D-434, D-435, D-436, D-437, D-440, D-445, D-473, D-537, D-614, D-628, F-1, F-9, F-14, I-2, I-3, I-5, I-6
Clean Air Act, 3-13, 3-14, 3-44, 5-16, 5-61, 6-60, 11-4, 11-9, 11-15, D-607
Climate change, xxxviii, xlvii, l, lix, lx, 3-45, 3-49, 4-18, 4-79, 4-80, 4-81, 4-83, 4-84, 4-87, 4-89, 4-98, 4-103, 4-109, 5-19, 5-59, 5-65, 6-8, 6-11, 6-21, 6-31, 6-34, 6-

58, 6-61, 6-62, 6-66, 8-2, 8-3, 8-4, 9-2, 11-4, B-6, B-35, D-5, D-211, D-212, D-215, D-217, D-495, D-597, D-611, D-615, D-616
Coastal, 3-6, 3-11, 3-17, 3-20, 3-23, 3-24, 3-25, 3-29, 3-44, 4-46, 4-47, 4-48, 4-79, 4-80, 4-87, 4-101, 4-103, 5-32, 5-33, 5-61, 6-7, 6-11, 6-28, 6-31, 11-2, D-94, D-212, D-213, D-217, D-255, D-256, D-314, D-342, D-611, F-15
Consolidated storage, 2-20, 11-5, D-303, D-406, D-407, D-408
Cooling system, xli, 1-17, 2-2, 2-3, 2-4, 2-5, 2-28, 3-1, 3-3, 3-21, 3-22, 3-23, 4-2, 4-22, 4-29, 4-30, 4-31, 4-32, 4-33, 4-36, 4-37, 4-38, 4-39, 4-40, 4-41, 4-42, 4-44, 4-45, 4-46, 4-47, 4-86, 6-9, 6-11, 6-32, 6-35, 11-5, 11-16, D-233, D-241, D-249, D-254, D-256, D-330, D-335, D-396, D-411, D-417, D-468, D-494, D-541
Core damage frequency, 4-77, 11-5, D-542
Costs, xxix, lxiv, lxv, 1-25, 2-1, 2-2, 2-12, 2-17, 2-19, 2-21, 2-24, 2-25, 2-26, 2-27, 2-28, 2-29, 2-30, 2-31, 2-32, 2-34, 2-35, 4-12, 4-38, 4-96, 6-16, 7-1, 7-2, 7-3, 7-4, 7-5, 7-7, 7-8, 7-9, 7-10, 7-11, 7-12, 7-13, 7-14, 7-15, 7-16, 7-17, 11-3, B-7, B-27, D-5, D-17, D-25, D-42, D-50, D-60, D-65, D-82, D-88, D-104, D-108, D-120, D-121, D-122, D-123, D-124, D-125, D-126, D-132, D-149, D-157, D-160, D-162, D-164, D-165, D-170, D-173, D-182, D-184, D-185, D-191, D-193, D-197, D-265, D-273, D-274, D-277, D-293, D-316, D-327, D-328, D-336, D-337, D-345, D-346, D-349, D-350, D-367, D-372, D-392, D-408, D-413, D-415, D-421, D-460, D-497, D-498, D-499, D-500, D-501, D-502, D-503, D-504, D-505, D-506, D-519, D-522, D-530, D-531, D-533, D-534, D-540, D-541, D-544, D-548, D-549, D-630, F-4, F-5, F-8, F-9, F-12, F-13, F-14, F-19, H-1, H-2, H-3, H-4, H-5, H-6, H-7, H-8
Council on Environmental Quality, 1-7, 1-8, 1-23, 3-8, 3-44, 5-20, 6-1, 6-3, 6-4, 6-22, 6-60, 6-61, 7-8, 7-10, 7-12, 7-16, 7-18, 11-5, D-39, D-44, D-45, D-46, D-48, D-76, D-84, D-107, D-108, D-148, D-212, D-215, D-217, D-231, D-234, D-495, D-611
Critical habitat, xl, xli, liii, 3-28, 4-44, 4-45, 4-47, 4-48, 4-49, 5-31, 5-32, 5-33, 5-34, 6-36, 8-7, 11-5, D-253, D-255
Criticality, 2-33, 2-34, 4-74, 4-75, 11-6, B-12, B-22, D-163, D-290, D-291, D-295, D-317, D-318, D-320, D-321, D-333, D-334, D-387, D-398, D-399, D-400, D-410, D-468, D-541, D-543, D-546, D-613, D-614, I-2, I-5
Cultural resource, xxxiv, xxxv, xxxvii, xlii, xliii, xlviii, xlix, liii, liv, lv, lix, lxi, lxii, 3-30, 3-31, 3-32, 4-13, 4-14, 4-49, 4-50, 4-51, 4-52, 4-53, 4-54, 4-97, 4-98, 5-3, 5-12, 5-13, 5-14, 5-35, 5-36, 5-37, 5-38, 5-39, 5-40, 5-58, 5-59, 6-10, 6-37, 6-38, 6-39, 6-58, 8-2, 8-3, 8-4, 8-5, 8-6, 8-7, 8-9, 9-2, 9-3, 9-4, 9-6, 11-6, D-5, D-129, D-202, D-203, D-257, D-258, D-259, D-260, D-261, D-262, D-263, D-264, D-265, D-267

D

Decommissioning, xxiv, xxxii, xliv, lvi, lx, lxii, lxiv, 1-16, 1-17, 1-18, 1-20, 1-29, 2-3, 2-5, 2-7, 2-10, 2-12, 2-17, 2-19, 2-20, 2-24, 2-25, 2-26, 2-27, 2-28, 2-29, 2-34, 2-35, 2-38, 2-39, 2-40, 3-4, 3-5, 3-7, 3-19, 3-34, 3-41, 3-44, 3-45, 3-46, 3-47, 3-48, 4-2, 4-7, 4-10, 4-11, 4-18, 4-19, 4-25, 4-27, 4-34, 4-52, 4-62, 4-63, 4-64, 4-65, 4-85, 4-102, 4-105, 4-110, 5-3, 5-4, 5-22, 5-32, 5-47, 5-48, 5-63, 5-64, 6-2, 6-3, 6-8, 6-9, 6-11, 6-13, 6-14, 6-15, 6-17, 6-18, 6-19, 6-

23, 6-24, 6-26, 6-27, 6-29, 6-32, 6-33, 6-35, 6-36, 6-38, 6-39, 6-41, 6-42, 6-44, 6-47, 6-48, 6-49, 6-51, 6-52, 6-55, 6-56, 6-57, 6-61, 6-62, 6-63, 6-66, 8-9, 11-6, 11-8, 11-19, B-8, B-12, B-14, B-21, B-24, B-34, B-39, B-41, D-6, D-27, D-49, D-60, D-61, D-68, D-69, D-86, D-101, D-103, D-109, D-110, D-111, D-132, D-134, D-135, D-139, D-140, D-141, D-142, D-143, D-149, D-150, D-170, D-182, D-183, D-184, D-185, D-188, D-191, D-194, D-195, D-196, D-197, D-200, D-202, D-205, D-207, D-216, D-233, D-257, D-263, D-273, D-275, D-276, D-328, D-330, D-340, D-361, D-366, D-378, D-382, D-387, D-391, D-396, D-397, D-398, D-423, D-424, D-430, D-431, D-432, D-442, D-444, D-449, D-450, D-451, D-457, D-459, D-461, D-464, D-465, D-466, D-467, D-468, D-469, D-470, D-477, D-484, D-485, D-499, D-500, D-502, D-503, D-504, D-505, D-506, D-507, D-509, D-522, D-545, D-548, D-552, D-562, D-572, D-588, D-597, D-608, D-611, D-621, D-622, D-623, D-630, E-1, E-5, E-6, E-7, E-8, E-19, E-23, E-24, E-25, E-27, E-28, F-1, F-2, F-10, F-11, F-12, F-15, F-16, F-17, F-18, F-21, G-1, G-9, G-18

Decommissioning GEIS, xxiv, 1-18, 2-5, 6-9, 6-11, 6-13, 6-14, 6-17, 6-19, 6-24, 6-27, 6-29, 6-33, 6-36, 6-38, 6-41, 6-42, 6-44, 6-52, 6-55, 11-6, D-134, D-183

Department of Energy, 1-1, 1-5, 1-16, 1-20, 1-23, 1-25, 1-26, 1-28, 2-1, 2-10, 2-18, 2-20, 2-21, 2-22, 2-23, 2-30, 2-32, 2-33, 2-37, 2-38, 3-41, 4-3, 4-31, 4-42, 4-63, 4-64, 4-68, 4-72, 4-77, 4-83, 4-89, 4-102, 5-1, 5-20, 5-47, 5-61, 5-62, 5-64, 6-10, 6-14, 6-20, 6-42, 6-46, 6-48, 6-61, 11-6, 11-21, B-3, B-4, B-8, B-16, B-27, B-28, B-29, B-30, B-31, B-34, B-35, B-36, B-38, B-40, B-41, D-12, D-28, D-32, D-48, D-49, D-63, D-68, D-70, D-90, D-94, D-107, D-122, D-125, D-137, D-141, D-156, D-157, D-158, D-164, D-171, D-172, D-173, D-174, D-176, D-177, D-180, D-182, D-183, D-184, D-221, D-222, D-227, D-229, D-248, D-269, D-278, D-290, D-291, D-295, D-296, D-298, D-323, D-324, D-336, D-372, D-375, D-376, D-378, D-379, D-381, D-383, D-384, D-385, D-402, D-403, D-407, D-408, D-412, D-415, D-476, D-497, D-500, D-502, D-503, D-504, D-513, D-518, D-519, D-525, D-526, D-537, D-547, D-548, D-549, D-550, D-551, D-552, D-611, D-612, D-618, D-630, E-4, E-26, G-14, G-15, G-16, I-6, I-7

Design-basis accidents, xlvi, 4-72, 4-73, 4-74, 4-76, 4-81, 4-82, 4-84, 6-56, 11-1, 11-7, 11-19, D-109, D-127, D-264, D-319, D-346, D-366, D-410, D-509

Disposal (permanent), xxiii, xxviii, xxxiv, xxxv, xxxvii, xliv, l, lvi, lvii, lxii, 1-1, 1-2, 1-3, 1-4, 1-5, 1-18, 1-20, 1-23, 1-25, 1-26, 1-27, 1-28, 2-4, 2-15, 2-20, 2-21, 2-27, 2-36, 2-37, 3-17, 3-21, 3-34, 3-35, 3-36, 3-37, 3-42, 3-45, 3-49, 4-14, 4-59, 4-60, 4-61, 4-62, 4-63, 4-64, 4-65, 4-67, 4-68, 4-97, 4-102, 5-15, 5-22, 5-45, 5-46, 5-48, 5-52, 5-53, 5-58, 5-61, 5-62, 6-9, 6-10, 6-19, 6-20, 6-42, 6-45, 6-46, 6-47, 6-48, 6-49, 6-50, 6-51, 6-52, 6-61, 8-8, 8-9, 9-3, 11-3, 11-4, 11-5, 11-7, 11-10, 11-11, 11-13, 11-21, B-1, B-2, B-3, B-4, B-5, B-6, B-7, B-8, B-10, B-26, B-27, B-28, B-29, B-30, B-33, B-34, B-35, B-36, B-37, B-40, D-4, D-5, D-7, D-8, D-12, D-13, D-17, D-18, D-19, D-28, D-29, D-32, D-33, D-34, D-37, D-39, D-45, D-49, D-51, D-58, D-59, D-60, D-62, D-66, D-67, D-79, D-83, D-87, D-90, D-93, D-95, D-100, D-104, D-107, D-110, D-115, D-118, D-119, D-122,

D-134, D-135, D-141, D-143, D-144, D-154, D-163, D-164, D-165, D-166, D-171, D-172, D-173, D-174, D-176, D-178, D-193, D-204, D-237, D-269, D-270, D-271, D-272, D-273, D-274, D-275, D-276, D-277, D-284, D-289, D-294, D-297, D-299, D-327, D-367, D-370, D-371, D-372, D-373, D-374, D-375, D-376, D-377, D-378, D-379, D-380, D-381, D-382, D-383, D-384, D-388, D-393, D-395, D-397, D-407, D-408, D-416, D-499, D-500, D-502, D-503, D-504, D-505, D-506, D-512, D-514, D-516, D-517, D-518, D-523, D-525, D-529, D-548, D-549, D-551, D-552, D-604, D-605, D-609, D-612, D-615, D-616, D-620, D-621, D-630, F-14

Dose, xxxiv, xxxv, xlv, xlvii, lvii, lviii, lxiv, 2-23, 3-38, 3-39, 3-40, 3-41, 4-10, 4-11, 4-13, 4-26, 4-31, 4-42, 4-60, 4-69, 4-70, 4-71, 4-72, 4-73, 4-75, 4-76, 4-82, 4-83, 4-88, 4-89, 4-94, 4-96, 4-97, 4-101, 4-104, 4-105, 5-3, 5-13, 5-14, 5-52, 5-54, 5-55, 5-56, 5-57, 6-51, 6-53, 6-54, 6-56, 6-57, 11-2, 11-4, 11-6, 11-7, 11-16, 11-17, 11-19, 11-20, B-14, B-17, B-23, B-32, D-127, D-144, D-152, D-161, D-163, D-186, D-229, D-230, D-239, D-244, D-248, D-249, D-264, D-270, D-279, D-283, D-284, D-287, D-290, D-298, D-299, D-300, D-301, D-302, D-303, D-304, D-305, D-306, D-307, D-308, D-309, D-310, D-311, D-312, D-315, D-316, D-318, D-320, D-321, D-324, D-325, D-331, D-345, D-352, D-356, D-390, D-421, D-452, D-460, D-461, D-462, D-465, D-466, D-482, D-487, D-491, D-492, D-493, D-496, D-497, D-540, D-547, D-613, D-619, D-633, E-6, E-16, E-19, E-20, E-24, E-27, E-29, F-2, F-3, F-4, F-6, F-7, F-8, F-12, F-16

E

Earthquake, xxxii, xlvi, lviii, 1-10, 2-12, 3-15, 4-74, 4-76, 4-77, 4-78, 4-81, 4-82, 4-85, 4-86, 4-88, 5-57, 11-15, B-12, B-13, B-19, B-20, B-22, B-42, D-24, D-94, D-147, D-212, D-215, D-218, D-219, D-238, D-283, D-298, D-313, D-314, D-315, D-320, D-322, D-323, D-324, D-334, D-340, D-341, D-342, D-343, D-346, D-348, D-349, D-360, D-366, D-368, D-370, D-389, D-391, D-392, D-394, D-396, D-398, D-406, D-409, D-410, D-440, D-448, D-449, D-450, D-478, D-496, D-508, D-518, D-530, D-532, D-543, D-544, D-545, D-546, D-612, D-629, D-633, E-1, F-3, F-15, F-16, F-17, F-18, F-21, G-2

Effluent, xxxix, xl, lii, lxiv, 2-4, 2-32, 3-16, 3-39, 3-40, 4-5, 4-23, 4-27, 4-29, 4-31, 4-32, 4-33, 4-34, 4-35, 4-36, 4-39, 4-40, 4-42, 4-43, 4-104, 4-105, 5-13, 5-29, 6-29, 6-57, 11-7, B-23, B-24, D-130, D-131, D-160, D-161, D-190, D-210, D-225, D-226, D-228, D-229, D-236, D-237, D-239, D-242, D-244, D-249, D-255, D-300, D-301, D-305, D-309, D-311, D-390, D-456, D-460, D-461, D-462, D-468, D-474, D-478, D-479, D-480, D-490, D-502, D-521, D-528, D-609, D-619, E-6, E-7, E-13, E-15, E-19, E-20, E-26, E-27, E-28

Electromagnetic field, 3-22, 4-32, 6-54, 11-8

Endangered species, xlvii, lix, lxi, 3-28, 4-98, 5-59, 6-59, 8-2, 8-3, 8-4, 11-8, 11-9, D-251, D-253, D-255, D-256

Entrainment, 3-22, 4-36, 4-37, 4-38, 4-39, 4-46, 6-34, 6-35, 11-8, D-245, D-249, D-250, D-491

Environmental justice, xxxiv, xxxv, xxxvii, xlvii, xlix, lix, lx, 3-8, 3-10, 3-11, 3-43, 3-44, 4-9, 4-10, 4-11, 4-12, 4-13, 4-14, 4-98, 4-100, 4-105, 4-106, 5-10, 5-11, 5-12,

5-13, 5-58, 5-59, 5-61, 6-15, 6-16, 6-18, 6-58, 6-60, 8-2, 8-3, 8-4, 8-6, 8-7, 8-9, 9-2, 9-4, 9-5, 11-9, D-5, D-125, D-198, D-199, D-200, D-201, D-202, D-203, D-204, D-205, D-206, D-207, D-222, D-230, D-259, D-260, D-490, D-491, D-514, D-607

Environmental Protection Agency, xxvii, xliii, xliv, lv, lxiii, 1-11, 1-12, 1-25, 1-28, 3-8, 3-12, 3-13, 3-14, 3-16, 3-17, 3-19, 3-33, 3-36, 3-39, 3-44, 3-45, 3-46, 4-9, 4-19, 4-26, 4-31, 4-37, 4-55, 4-56, 4-57, 4-61, 4-102, 5-13, 5-17, 5-20, 5-41, 5-42, 5-43, 5-48, 5-62, 6-1, 6-22, 6-40, 6-42, 6-60, 6-62, 11-5, 11-9, 11-14, B-26, C-3, D-7, D-28, D-60, D-130, D-207, D-208, D-216, D-235, D-236, D-246, D-247, D-303, D-328, D-376, D-381, D-383, D-460, D-461, D-462, D-474, D-476, D-479, D-482, D-486, D-495, D-509, D-517, D-561, D-606, D-607, D-613, E-8, E-15, E-16, E-17, E-20, E-26

Essential Fish Habitat, xlvii, lix, lxi, 3-28, 3-29, 4-44, 4-46, 4-47, 4-48, 4-49, 4-98, 5-32, 5-34, 5-59, 6-59, 8-2, 8-3, 8-4, 8-7, 11-9

Evacuation, B-14, D-68, D-94, D-185, D-190, D-294, D-315, D-332, D-336, D-337, D-342, D-349, D-441, D-507, D-509, F-4, F-5, F-6, F-8, F-12

F

Findings, 1-2, 1-3, 1-7, 1-8, 1-18, 1-21, 1-29, 2-10, 2-20, 3-44, 3-47, 4-47, 4-53, 4-77, 4-78, 4-86, 4-96, 4-97, 4-107, 5-6, 5-26, 5-34, 5-37, 5-39, 5-58, 6-60, 7-7, 7-10, 7-11, 7-12, 7-13, 7-16, 7-17, 11-8, B-1, B-11, D-7, D-10, D-11, D-22, D-24, D-26, D-28, D-29, D-33, D-40, D-46, D-47, D-52, D-64, D-68, D-73, D-79, D-80, D-85, D-95, D-111, D-113, D-130, D-131, D-155, D-197, D-198, D-202, D-207, D-211, D-213, D-214, D-216, D-229, D-244, D-247, D-249, D-254, D-256, D-259, D-260, D-261, D-285, D-307, D-314, D-316, D-341, D-347, D-348, D-352, D-360, D-367, D-370, D-375, D-376, D-382, D-384, D-411, D-412, D-416, D-417, D-418, D-428, D-438, D-439, D-446, D-449, D-450, D-451, D-463, D-473, D-477, D-479, D-481, D-517, D-607, D-621, H-8

Fish and Wildlife Service, xli, 3-21, 3-28, 3-29, 3-45, 4-45, 4-46, 4-48, 4-49, 4-103, 5-31, 5-32, 5-33, 5-62, 6-32, 6-35, 6-36, 11-3, 11-8, 11-9, D-253, D-255, D-256, D-615

Flood, xlvi, 4-74, 4-76, 4-77, 4-78, 4-80, 4-81, 4-82, 4-83, 4-84, 4-88, 4-89, 4-90, 4-104, 4-110, 5-6, 11-15, B-19, D-24, D-215, D-238, D-292, D-313, D-319, D-320, D-321, D-332, D-334, D-340, D-341, D-342, D-343, D-360, D-392, D-394, D-410, D-496, D-508, E-13

Frequency-weighted consequence, D-422, F-13

Fuel cycle, 1-18, 1-23, 2-20, 3-39, 3-40, 6-22, 6-46, 6-52, 6-56, 11-10, 11-16, D-12, D-59, D-64, D-65, D-145, D-204, D-216, D-269, D-294, D-304, D-373, D-413, D-491, D-496, D-499, D-517, D-605, D-612

Fukushima, xxxii, 1-10, 2-12, 2-13, 2-39, 4-78, 4-80, 4-86, 4-109, B-13, B-20, B-22, B-32, B-37, B-41, D-6, D-22, D-68, D-70, D-71, D-94, D-109, D-114, D-132, D-133, D-155, D-212, D-219, D-225, D-238, D-302, D-306, D-313, D-315, D-316, D-320, D-322, D-325, D-326, D-332, D-334, D-335, D-344, D-368, D-386, D-389, D-391, D-392, D-396, D-397, D-398, D-412, D-417, D-418, D-419, D-440, D-442, D-445, D-452, D-453, D-464, D-507, D-508, D-520, D-528, D-530, D-535, D-537, D-538,

D-539, D-541, D-542, D-543, D-544, D-545, D-546, D-547, D-615, D-626, D-627, D-633, F-15, F-16, F-20, F-21

G

Greenhouse gases, xxxiv, xxxv, xxxviii, l, li, lxii, 3-11, 3-12, 3-44, 3-48, 3-49, 4-15, 4-18, 4-19, 4-20, 4-80, 4-102, 4-109, 5-19, 5-20, 5-21, 5-62, 5-65, 6-21, 6-22, 6-60, 6-61, 6-62, 6-66, 8-9, 11-11, D-211, D-212, D-215, D-216, D-217, D-249, D-491, D-495, D-496, D-497, D-607, D-611

Groundwater, xxxiv, xxxv, xxxviii, xxxix, xlvii, li, lii, lix, lxi, lxiii, 2-30, 3-11, 3-15, 3-17, 3-18, 3-19, 3-21, 3-48, 3-49, 4-10, 4-20, 4-22, 4-23, 4-25, 4-26, 4-27, 4-28, 4-30, 4-70, 4-98, 4-108, 5-24, 5-25, 5-26, 5-27, 5-28, 5-59, 6-28, 6-29, 6-30, 6-31, 6-58, 8-2, 8-3, 8-4, 9-2, 9-5, 11-11, 11-12, 11-20, 11-21, B-23, B-40, B-41, D-130, D-131, D-213, D-214, D-220, D-221, D-223, D-224, D-225, D-226, D-227, D-228, D-229, D-230, D-231, D-232, D-233, D-234, D-235, D-237, D-238, D-239, D-240, D-242, D-243, D-244, D-301, D-306, D-334, D-344, D-372, D-454, D-455, D-456, D-457, D-458, D-459, D-460, D-462, D-463, D-464, D-465, D-466, D-467, D-470, D-471, D-472, D-474, D-475, D-476, D-477, D-478, D-479, D-480, D-481, D-482, D-483, D-484, D-485, D-486, D-487, D-490, D-492, D-493, D-505, D-609, D-615, D-618, D-626, D-631, D-633, E-1, E-5, E-6, E-7, E-8, E-9, E-10, E-11, E-12, E-13, E-14, E-15, E-16, E-17, E-18, E-19, E-20, E-21, E-22, E-23, E-24, E-25, E-26, E-27, E-28, E-29

H

Hardened onsite storage, xxvi, xxviii, 1-10, 11-11, D-6, D-59, D-60, D-72, D-113, D-114, D-115, D-116, D-118, D-369, D-405, D-420, D-530, D-531, D-534, D-535, D-536, D-537

Hazardous waste, xxxiv, xxxv, xliv, 3-35, 3-36, 3-37, 3-43, 4-59, 4-61, 4-64, 5-46, 6-47, 11-11, 11-14, D-277, D-505, D-615

High-burnup fuel, xxviii, 1-25, 2-6, 2-8, 2-28, B-9, B-11, B-12, B-16, D-4, D-60, D-72, D-86, D-137, D-138, D-145, D-158, D-162, D-163, D-179, D-283, D-284, D-285, D-287, D-288, D-317, D-318, D-325, D-333, D-334, D-368, D-392, D-395, D-399, D-401, D-402, D-403, D-404, D-411, D-413, D-414, D-415, D-425, D-451, D-536, D-537, F-18, G-1, G-13, G-15, I-1, I-2, I-3, I-4, I-6, I-7

High-level waste, 1-10, 1-24, 1-28, 1-30, 11-12, 11-21, B-40, D-39, D-40, D-48, D-79, D-135, D-172, D-176, D-210, D-290, D-313, D-357, D-364, D-378, D-381, D-384, D-385, D-512, D-519, D-525, D-607, D-630

Human health, xxxiv, xxxv, xxxvii, xlix, l, 3-8, 3-9, 3-10, 3-11, 3-35, 4-9, 4-10, 4-11, 4-12, 4-13, 4-14, 4-71, 4-79, 5-10, 5-11, 5-12, 5-13, 5-14, 5-15, 5-54, 5-55, 5-56, 6-16, 6-17, 6-18, 6-54, 8-6, 8-7, 11-9, 11-11, 11-14, D-58, D-59, D-199, D-200, D-204, D-205, D-206, D-207, D-209, D-259, D-260, D-300, D-301, D-306, D-309, D-344, D-547, F-4

I

Impingement, 3-22, 4-36, 4-37, 4-38, 4-39, 4-46, 6-34, 6-35, 11-12, D-245, D-249, D-250, D-491

Institutional control, xxviii, xxix, xxxi, 1-16, 11-12, B-10, B-26, B-27, B-28, B-29, B-30, B-31, D-5, D-63, D-89, D-107, D-128, D-138, D-139, D-141, D-143, D-153, D-155, D-157, D-170, D-171, D-172, D-173, D-174, D-175, D-176, D-177, D-210, D-247, D-248, D-277, D-464, D-469, D-503, D-550, D-613, D-633

Interim storage, xxxi, 2-4, 2-19, 2-20, 2-38, 2-39, 11-10, 11-12, 11-13, B-5, B-27, D-66, D-89, D-118, D-172, D-179, D-202, D-292, D-347, D-406, D-407, D-409, D-412, D-518, D-623

L

Land use, xxxiv, xxxv, xxxvi, xlvii, xlviii, lii, lix, lx, lxii, 1-16, 2-8, 3-1, 3-3, 3-20, 3-46, 4-3, 4-4, 4-5, 4-6, 4-98, 5-5, 5-6, 5-7, 5-8, 5-29, 5-59, 6-10, 6-11, 6-12, 6-58, 8-2, 8-3, 8-4, 8-7, 9-2, 9-6, D-5, D-23, D-95, D-107, D-168, D-182, D-183, D-184, D-185, D-186, D-187, D-188, D-189, D-191, D-192, D-194, D-195, D-489, F-9

License renewal, xxiii, xxiv, xxxii, xxxiii, xxxix, xl, lvi, lxiv, 1-4, 1-7, 1-13, 1-18, 1-20, 1-22, 1-30, 2-40, 3-1, 3-2, 3-5, 3-11, 3-14, 3-15, 3-19, 3-20, 3-22, 3-25, 3-28, 3-31, 3-32, 3-34, 3-37, 3-47, 3-48, 4-2, 4-3, 4-15, 4-25, 4-29, 4-30, 4-31, 4-32, 4-33, 4-36, 4-37, 4-38, 4-39, 4-40, 4-41, 4-42, 4-43, 4-45, 4-47, 4-50, 4-55, 4-57, 4-59, 4-60, 4-61, 4-63, 4-66, 4-69, 4-70, 4-105, 4-106, 4-107, 4-109, 5-35, 5-38, 5-48, 5-64, 6-4, 6-6, 6-13, 6-17, 6-25, 6-48, 6-49, 6-52, 6-64, 6-65, 7-3, 7-5, 7-6, 7-7, 7-9, 7-11, 7-13, 7-19, 11-13, B-18, B-19, B-25, C-1, C-3, D-20, D-23, D-26, D-28, D-29, D-48, D-51, D-53, D-59, D-65, D-67, D-68, D-70, D-71, D-73, D-74, D-78, D-80, D-88, D-95, D-96, D-101, D-104, D-105, D-116, D-126, D-133, D-134, D-146, D-150, D-156, D-159, D-183, D-197, D-205, D-206, D-211, D-220, D-234, D-236, D-238, D-240, D-242, D-243, D-244, D-245, D-247, D-248, D-249, D-253, D-254, D-255, D-256, D-260, D-261, D-264, D-266, D-267, D-274, D-275, D-286, D-337, D-344, D-345, D-412, D-457, D-458, D-463, D-469, D-494, D-499, D-503, D-517, D-522, D-526, D-538, D-539, D-541, D-542, D-546, D-620, D-624, D-625, D-630, D-631, E-5, E-24, E-28, F-14, F-16, F-20, F-21, H-1, H-3, H-4, H-5, H-7, H-8

License Renewal GEIS, xxiv, xxxiii, xxxix, xl, lvi, lxiv, 1-13, 1-18, 3-1, 3-2, 3-11, 3-14, 3-15, 3-19, 3-20, 3-22, 3-25, 3-28, 3-31, 3-37, 4-3, 4-15, 4-25, 4-29, 4-30, 4-31, 4-32, 4-33, 4-36, 4-37, 4-38, 4-39, 4-40, 4-41, 4-42, 4-43, 4-50, 4-55, 4-57, 4-59, 4-60, 4-61, 4-66, 4-69, 4-70, 6-4, 6-13, 6-17, 6-48, 6-49, 6-52, 7-6, 11-13, D-59, D-65, D-104, D-105, D-146, D-183, D-234, D-238, D-240, D-242, D-243, D-244, D-245, D-247, D-249, D-253, D-254, D-274, D-275, D-457, D-494, D-538, D-539, F-14, F-16

License termination, 1-23, 1-29, 6-24, D-462, D-485, D-505, D-621, E-9, E-27

Low-level waste, xliv, xlv, xlviii, lvi, lvii, lix, 1-18, 1-24, 2-27, 3-34, 3-35, 3-36, 4-59, 4-60, 4-61, 4-62, 4-63, 4-64, 4-65, 4-66, 4-67, 4-68, 4-69, 4-98, 5-45, 5-46, 5-47, 5-48, 5-52, 5-53, 5-59, 6-11, 6-45, 6-46, 6-47, 6-48, 6-49, 6-50, 6-51, 6-52, 8-2, 8-3, 8-8, 11-4, 11-14, 11-21, D-62, D-70, D-178, D-179, D-269, D-270, D-271, D-272, D-273, D-274, D-275, D-276, D-380, D-381, D-387, D-412, D-524, D-630

M

Mitigation, xli, lxiv, 2-36, 3-12, 3-19, 4-37, 4-45, 4-46, 4-47, 4-48, 4-49, 4-53, 5-16, 5-26, 5-30, 5-32, 5-33, 5-35, 5-37, 5-39, 5-44, 6-11, 6-19, 6-24, 6-26, 6-27, 6-29, 6-32, 6-35, 6-36, 6-38, 6-41, 6-46, 6-48, 6-49, 11-1, 11-8, 11-14, D-17, D-38, D-41, D-50, D-61, D-71, D-74, D-83, D-85, D-86, D-87, D-94, D-95, D-98, D-99, D-105, D-106, D-110, D-111, D-113, D-115, D-154, D-187, D-194, D-207, D-255, D-257, D-264, D-316, D-328, D-334, D-343, D-344, D-347, D-350, D-351, D-360, D-361, D-375, D-398, D-399, D-402, D-417, D-426, D-431, D-432, D-470, D-471, D-497, D-518, D-533, E-10, E-26, F-6, F-9, F-15, F-16, F-18, F-21

Mixed oxide fuel, xxxi, xxxii, 2-8, 2-9, 11-14, B-10, B-12, B-16, D-60, D-137, D-179, D-180, D-304, D-398, D-399, D-403, D-411, D-413, D-414, D-415, D-416, D-452, D-453, I-1, I-5

Mixed waste, xxxiv, xxxv, xliv, xlviii, lvi, lvii, lix, 3-35, 3-36, 3-37, 4-59, 4-60, 4-61, 4-63, 4-65, 4-98, 5-45, 5-46, 5-48, 5-59, 6-46, 6-47, 6-48, 6-49, 6-50, 8-2, 8-3, 11-14

Monitoring, xxxii, xxxvi, xxxvii, xxxviii, xxxix, xli, xlii, xliii, l, liv, lv, lxiii, 2-4, 2-15, 2-28, 2-29, 2-30, 2-31, 2-32, 3-11, 3-13, 3-16, 3-17, 3-19, 3-39, 4-3, 4-4, 4-5, 4-7, 4-10, 4-11, 4-12, 4-13, 4-14, 4-15, 4-16, 4-21, 4-23, 4-26, 4-27, 4-31, 4-33, 4-37, 4-43, 4-45, 4-48, 4-51, 4-53, 4-54, 4-55, 4-56, 4-57, 4-62, 4-63, 4-64, 4-70, 4-77, 4-78, 5-3, 5-4, 5-13, 5-14, 5-15, 5-17, 5-29, 5-32, 5-39, 5-40, 5-42, 5-43, 5-46, 5-55, 6-40, 6-54, 11-1, 11-9, 11-13, 11-14, 11-21, B-10, B-22, B-24, B-26, B-28, B-32, B-35, B-40, D-24, D-25, D-46, D-133, D-143, D-157, D-160, D-161, D-165, D-168, D-169, D-173, D-184, D-188, D-189, D-190, D-194, D-220, D-221, D-224, D-225, D-227, D-230, D-239, D-258, D-261, D-276, D-301, D-307, D-311, D-336, D-364, D-388, D-390, D-395, D-400, D-402, D-411, D-415, D-455, D-456, D-457, D-458, D-463, D-464, D-465, D-466, D-467, D-468, D-470, D-471, D-472, D-474, D-478, D-479, D-480, D-481, D-482, D-483, D-484, D-487, D-491, D-492, D-502, D-526, D-529, D-537, D-609, D-618, D-633, E-4, E-5, E-6, E-7, E-9, E-10, E-16, E-17, E-20, E-23, E-24, E-29

N

National Ambient Air Quality Standards, 3-13, 3-14, 3-46, 5-15, 5-16, 11-15

National Environmental Policy Act, xxiii, xxiv, xxv, xxvi, xxxi, xxxii, xlii, xlvii, xlix, lxi, lxvi, 1-1, 1-3, 1-4, 1-5, 1-6, 1-7, 1-8, 1-9, 1-12, 1-17, 1-18, 1-19, 1-20, 1-21, 1-25, 1-29, 3-8, 3-9, 3-10, 3-32, 3-44, 3-46, 4-2, 4-9, 4-11, 4-12, 4-16, 4-49, 4-51, 4-52, 4-91, 4-104, 5-11, 5-14, 5-33, 5-35, 5-36, 5-37, 5-38, 5-63, 6-1, 6-4, 6-16, 6-39, 6-60, 6-61, 6-62, 7-3, 7-7, 7-8, 7-9, 7-10, 7-11, 7-12, 7-14, 7-18, 8-1, 8-4, 8-7, 8-8, 8-9, 9-2, 9-3, 9-4, 11-5, 11-8, 11-15, B-26, B-28, B-30, B-38, D-5, D-7, D-14, D-16, D-18, D-19, D-20, D-21, D-22, D-23, D-26, D-28, D-29, D-30, D-32, D-34, D-35, D-36, D-37, D-39, D-40, D-43, D-44, D-45, D-46, D-47, D-48, D-49, D-50, D-52, D-53, D-54, D-55, D-57, D-61, D-67, D-68, D-71, D-73, D-75, D-76, D-77, D-78, D-79, D-80, D-81, D-82, D-83, D-84, D-85, D-86, D-87, D-88, D-95, D-99, D-101, D-102, D-105, D-106, D-107, D-108, D-110, D-111, D-112, D-114, D-116, D-121, D-125, D-126, D-127, D-133, D-136, D-139,

D-140, D-146, D-148, D-151, D-152, D-153, D-154, D-156, D-158, D-160, D-164, D-171, D-173, D-175, D-176, D-198, D-199, D-200, D-201, D-202, D-204, D-206, D-208, D-212, D-214, D-215, D-217, D-218, D-223, D-226, D-231, D-234, D-236, D-239, D-243, D-245, D-252, D-257, D-259, D-260, D-262, D-263, D-267, D-268, D-282, D-285, D-303, D-313, D-318, D-327, D-338, D-339, D-343, D-347, D-349, D-353, D-369, D-382, D-384, D-385, D-407, D-409, D-412, D-417, D-419, D-420, D-424, D-443, D-446, D-447, D-451, D-452, D-458, D-459, D-460, D-461, D-464, D-469, D-470, D-471, D-473, D-487, D-492, D-493, D-495, D-496, D-500, D-513, D-514, D-517, D-518, D-524, D-535, D-550, D-606, D-611, D-618, F-4, G-2, G-17, I-2, I-8

National Historical Preservation Act, xlii, liv, 3-30, 3-31, 3-32, 3-46, 4-2, 4-13, 4-14, 4-49, 4-50, 4-51, 4-52, 4-53, 4-104, 5-13, 5-35, 5-36, 5-37, 5-38, 5-40, 5-63, 6-38, 6-39, 6-62, 11-15, D-257, D-260, D-262, D-263, D-264, D-265, D-266, D-267, D-618

National Marine Fisheries Service, xli, 3-28, 3-29, 4-45, 4-46, 4-47, 4-48, 4-49, 4-103, 5-31, 5-32, 5-33, 5-34, 5-62, 6-32, 6-35, 6-36, 11-3, 11-8, 11-15, D-253, D-255, D-256, D-612, D-615, D-619, D-630

National Pollution Discharge Elimination System, 3-16, 3-17, 3-37, 4-20, 4-22, 4-27, 4-30, 4-31, 4-34, 4-40, 4-42, 4-43, 5-23, 5-30, 6-27, 6-29, 6-32, 6-35, D-235, D-236, D-242, D-245, D-248, D-249, D-250, D-252, D-253, D-254

Native American, 2-5, 3-3, 3-6, 3-11, 3-31, 4-10, 6-10, 11-2, 11-9, C-2, D-197, D-202

Natural phenomena, xlvi, lviii, 3-12, 3-15, 4-18, 4-72, 4-74, 4-76, 4-77, 4-79, 4-80, 4-81, 4-82, 4-84, 4-88, 5-19, 5-57, 6-56, 11-7, 11-15, D-109, D-219, D-230, D-232, D-237, D-238, D-264, D-313, D-314, D-315, D-320, D-322, D-324, D-326, D-342, D-343, D-387, D-391, D-394, D-397, D-410, D-478, D-535, D-544

No-action alternative, 1-6, 1-7, 1-11, 4-72, 7-14, 11-8, 11-15, B-30, B-31, D-42, D-63, D-72, D-74, D-79, D-81, D-82, D-87, D-88, D-89, D-90, D-91, D-92, D-93, D-94, D-100, D-104, D-106, D-107, D-108, D-110, D-111, D-112, D-116, D-117, D-118, D-119, D-120, D-121, D-122, D-123, D-124, D-125, D-176, D-177

O

Occupational Safety and Health Administration, 3-33, 3-42, 3-43, 4-71, 4-72, 5-55, 6-54, 6-55, 11-16

P

Population (population density), xxxiv, xxxv, xxxvii, xlix, l, lx, lxiv, 2-4, 3-6, 3-7, 3-8, 3-9, 3-10, 3-11, 3-26, 3-31, 3-33, 3-38, 3-40, 3-41, 3-43, 3-46, 3-49, 4-9, 4-10, 4-11, 4-12, 4-13, 4-14, 4-37, 4-38, 4-39, 4-41, 4-47, 4-96, 4-100, 5-2, 5-3, 5-8, 5-9, 5-10, 5-11, 5-12, 5-13, 5-14, 5-15, 5-32, 5-34, 5-43, 5-63, 6-6, 6-7, 6-13, 6-15, 6-16, 6-17, 6-18, 6-35, 6-43, 6-50, 6-54, 6-66, 8-6, 8-7, 8-9, 11-14, 11-16, 11-19, D-94, D-95, D-99, D-144, D-185, D-188, D-190, D-198, D-199, D-200, D-202, D-203, D-204, D-205, D-207, D-240, D-259, D-260, D-264, D-280, D-288, D-293, D-305, D-307, D-310, D-311, D-316, D-318, D-329, D-331, D-340, D-341, D-342, D-348, D-353, D-358, D-406, D-413, D-415, D-421, D-422, D-423, D-424, D-425, D-441, D-442, D-443, D-450, D-451, D-481, D-490, D-494, D-508, D-509, D-532, D-543,

D-607, D-619, D-625, E-14, F-1, F-3, F-4, F-7, F-8, F-9, F-12, F-13, F-14, F-16
Postulated accident, xlvi, lviii, 3-15, 4-72, 4-81, 4-88, 4-97, 5-56, 5-58, 6-55, 6-57, 11-7, B-14, D-31, D-98, D-109, D-165, D-218, D-220, D-230, D-232, D-237, D-254, D-256, D-313, D-319, D-321, D-324, D-328, D-331, D-345, D-347, D-393, D-427, D-498, I-2
Pressurized water reactor, 2-3, 2-5, 2-6, 2-7, 2-8, 2-9, 2-18, 2-34, 3-3, 3-36, 4-2, 4-23, 4-74, 4-79, 4-88, 4-104, 6-48, 7-5, 11-17, B-12, B-14, B-36, B-42, D-67, D-269, D-271, D-304, D-322, D-340, D-357, D-358, D-414, D-424, D-427, D-429, D-439, D-453, D-632, E-1, E-2, E-3, E-19, E-20, E-22, E-27, F-14, F-17, F-22, G-1, G-3, G-4, G-5, G-6, G-7, G-8, G-9, I-3
Private Fuel Storage Facility, xlviii, 2-1, 2-15, 2-18, 2-19, 2-30, 2-40, 4-9, 5-1, 5-2, 5-5, 5-6, 5-7, 5-8, 5-9, 5-12, 5-14, 5-15, 5-16, 5-17, 5-19, 5-21, 5-23, 5-24, 5-25, 5-26, 5-27, 5-28, 5-30, 5-36, 5-41, 5-42, 5-44, 5-45, 5-46, 5-47, 5-49, 5-50, 5-51, 5-52, 5-54, 5-55, 5-57, 5-62, 5-63, 5-65, 6-9, 6-15, 6-20, 6-27, 6-29, 6-33, 6-36, 6-42, 6-44, 6-53, 6-55, 7-7, 7-19, 11-17, B-18, B-19, B-39, D-52, D-66, D-102, D-128, D-155, D-181, D-197, D-198, D-206, D-208, D-251, D-252, D-268, D-285, D-407, D-525, D-526, G-1, G-15, G-17

R

Radionuclide, xxxix, lxiii, 2-26, 3-19, 3-20, 3-37, 4-20, 4-22, 4-26, 4-31, 4-36, 4-41, 4-42, 4-70, 4-83, 6-30, 9-3, 11-11, 11-17, B-3, B-20, B-24, B-31, D-101, D-137, D-147, D-177, D-179, D-181, D-214, D-220, D-222, D-229, D-232, D-247, D-248, D-270, D-273, D-284, D-300, D-302, D-304, D-305, D-308, D-325, D-329, D-354, D-371, D-372, D-404, D-414, D-434, D-457, D-460, D-461, D-465, D-472, D-480, D-482, D-485, D-487, D-490, D-492, D-505, D-519, E-6, E-7, E-8, E-9, E-11, E-12, E-13, E-15, E-16, E-17, E-18, E-19, E-20, E-21, E-23, E-25, F-4, F-11, F-13, I-2
Remediation, 11-18, B-29, B-38, D-157, D-171, D-175, D-246, D-328, D-456, D-460, D-462, D-471, D-486, D-504, D-618, D-631, E-6, E-7, E-8, E-15, E-17, E-24, E-27, E-29
Repackaging, xxxi, xl, xliv, xlvi, xlix, 2-20, 2-21, 2-23, 2-30, 2-31, 2-32, 2-33, 4-5, 4-6, 4-16, 4-34, 4-35, 4-62, 4-63, 4-64, 4-67, 4-68, 4-69, 4-72, 4-82, 4-83, 4-89, 5-7, 5-18, 5-21, 5-26, 5-28, 5-46, 5-47, 5-53, 5-56, 11-7, 11-18, B-17, B-18, B-20, B-32, D-132, D-143, D-144, D-152, D-157, D-159, D-180, D-181, D-224, D-270, D-272, D-286, D-324, D-402, D-405, D-532
Repository (geologic), xxiii, xxiv, xxvi, xxx, xxxii, xlix, liii, lxv, lxvi, 1-1, 1-2, 1-3, 1-4, 1-10, 1-12, 1-15, 1-20, 1-23, 1-25, 1-26, 1-28, 2-15, 2-20, 2-29, 2-30, 2-35, 2-40, 4-1, 4-2, 4-5, 4-6, 4-9, 4-14, 4-17, 4-20, 4-21, 4-24, 4-28, 4-54, 4-57, 4-59, 4-66, 4-69, 4-71, 4-72, 4-102, 5-3, 5-4, 5-5, 5-8, 5-10, 5-18, 5-20, 5-21, 5-23, 5-25, 5-26, 5-29, 5-31, 5-34, 5-45, 5-48, 5-49, 5-54, 5-56, 5-61, 5-64, 6-9, 6-10, 6-14, 6-19, 6-20, 6-26, 6-29, 6-32, 6-35, 6-41, 6-42, 6-47, 6-48, 6-51, 6-52, 6-53, 6-55, 6-61, 8-5, 8-8, 9-2, 9-3, 11-3, 11-5, 11-11, 11-13, 11-18, 11-21, B-1, B-2, B-3, B-4, B-5, B-6, B-7, B-8, B-9, B-10, B-26, B-27, B-28, B-29, B-30, B-33, B-34, B-35, B-38, B-40, B-41, D-6, D-7, D-8, D-11, D-12, D-13, D-17, D-22, D-23, D-28, D-30, D-31, D-33, D-34, D-37, D-38, D-45, D-48, D-49, D-52, D-53, D-59, D-60, D-61, D-62, D-64,

D-65, D-66, D-67, D-72, D-78, D-79, D-86, D-87, D-90, D-93, D-95, D-105, D-114, D-116, D-117, D-118, D-119, D-120, D-122, D-123, D-129, D-134, D-135, D-136, D-137, D-138, D-139, D-140, D-141, D-143, D-144, D-154, D-155, D-157, D-160, D-162, D-163, D-164, D-166, D-171, D-172, D-173, D-174, D-176, D-180, D-188, D-192, D-194, D-195, D-197, D-200, D-202, D-205, D-260, D-290, D-294, D-305, D-344, D-367, D-368, D-370, D-371, D-372, D-373, D-374, D-375, D-376, D-377, D-378, D-379, D-380, D-381, D-382, D-383, D-384, D-385, D-386, D-388, D-397, D-406, D-407, D-408, D-416, D-455, D-491, D-499, D-500, D-501, D-502, D-503, D-504, D-505, D-506, D-512, D-516, D-517, D-518, D-519, D-525, D-532, D-547, D-548, D-549, D-551, D-604, D-612, D-621, D-630, E-1

Reprocessing, xxvi, xxvii, 1-24, 2-1, 2-11, 2-12, 4-2, 5-49, 11-10, 11-12, 11-18, D-7, D-62, D-67, D-93, D-376, D-389, D-413, D-415, D-520, D-524, E-4

Risk, xxxiii, xlv, xlvi, xlvii, lix, lxiv, 1-1, 1-3, 1-9, 1-24, 2-12, 2-21, 2-32, 3-8, 3-9, 3-10, 3-12, 3-39, 3-42, 4-10, 4-27, 4-66, 4-71, 4-72, 4-73, 4-75, 4-76, 4-77, 4-78, 4-79, 4-80, 4-81, 4-84, 4-85, 4-86, 4-87, 4-88, 4-89, 4-90, 4-91, 4-94, 4-97, 4-103, 4-104, 4-105, 4-107, 4-108, 5-13, 5-51, 5-52, 5-55, 5-58, 5-65, 6-16, 6-17, 6-22, 6-51, 6-52, 6-53, 6-55, 6-56, 6-57, 6-63, 6-66, 11-18, B-7, B-12, B-13, B-14, B-19, B-28, B-29, B-30, B-39, B-40, D-29, D-47, D-50, D-52, D-68, D-70, D-86, D-87, D-96, D-98, D-105, D-107, D-108, D-113, D-114, D-115, D-127, D-130, D-131, D-141, D-144, D-145, D-147, D-148, D-153, D-154, D-161, D-162, D-173, D-175, D-176, D-178, D-185, D-188, D-189, D-190, D-193, D-203, D-207, D-217, D-219, D-222, D-229, D-231, D-232, D-234, D-235, D-247, D-264, D-265, D-270, D-277, D-278, D-279, D-280, D-281, D-282, D-283, D-285, D-287, D-289, D-290, D-292, D-293, D-294, D-295, D-296, D-297, D-298, D-299, D-303, D-304, D-305, D-306, D-308, D-309, D-311, D-312, D-313, D-315, D-316, D-317, D-318, D-319, D-320, D-321, D-322, D-323, D-324, D-325, D-326, D-327, D-328, D-329, D-330, D-331, D-332, D-338, D-339, D-340, D-341, D-342, D-343, D-344, D-345, D-347, D-348, D-349, D-350, D-351, D-352, D-353, D-354, D-355, D-356, D-357, D-358, D-359, D-360, D-361, D-364, D-366, D-368, D-369, D-370, D-374, D-386, D-391, D-394, D-396, D-397, D-398, D-403, D-406, D-407, D-408, D-412, D-417, D-418, D-419, D-420, D-421, D-422, D-423, D-424, D-428, D-439, D-440, D-442, D-443, D-447, D-448, D-449, D-451, D-452, D-457, D-458, D-459, D-460, D-475, D-487, D-494, D-495, D-496, D-498, D-504, D-509, D-523, D-525, D-528, D-530, D-532, D-533, D-535, D-536, D-538, D-542, D-543, D-545, D-547, D-551, D-609, D-610, D-613, D-614, D-616, D-618, D-620, D-621, D-624, D-625, D-631, D-632, D-633, F-1, F-2, F-3, F-5, F-7, F-8, F-10, F-12, F-13, F-14, F-15, F-16, F-17, F-18, F-20, F-21

Rulemaking, xxiii, xxiv, xxv, xxvi, xxvii, xxviii, xxix, 1-1, 1-2, 1-3, 1-6, 1-9, 1-10, 1-23, 1-26, 1-27, 1-28, 1-29, 1-30, 2-12, 2-13, 3-10, 3-32, 4-49, 4-93, 4-100, 5-35, 7-2, 7-8, 7-9, 7-10, 7-11, 7-12, 7-13, 7-14, 7-15, 7-16, 8-1, 11-15, 11-18, 11-21, B-20, C-2, C-3, C-4, C-5, C-6, C-7, C-8, C-9, C-12, C-13, C-15, C-17, D-1, D-3, D-4, D-5, D-7, D-9, D-11, D-12, D-13, D-14, D-15, D-16, D-17, D-18, D-19, D-20, D-21, D-25,

D-26, D-33, D-35, D-36, D-39, D-40, D-41, D-42, D-44, D-45, D-48, D-51, D-54, D-55, D-56, D-57, D-58, D-59, D-61, D-62, D-64, D-65, D-66, D-68, D-72, D-73, D-74, D-77, D-80, D-81, D-82, D-83, D-84, D-85, D-88, D-89, D-108, D-110, D-111, D-112, D-113, D-116, D-117, D-118, D-119, D-120, D-121, D-123, D-145, D-151, D-201, D-205, D-206, D-208, D-218, D-219, D-238, D-240, D-260, D-263, D-266, D-295, D-299, D-306, D-307, D-316, D-334, D-336, D-355, D-360, D-368, D-378, D-394, D-404, D-405, D-410, D-431, D-432, D-448, D-462, D-485, D-503, D-507, D-512, D-514, D-516, D-517, D-519, D-520, D-522, D-523, D-524, D-525, D-533, D-534, D-537, D-545, D-547, D-550, D-552, D-555, D-607, D-608, D-621, D-628, E-9, E-27, F-15, F-16, F-19, H-1, H-6, H-7

S

Safety, xxxii, xlv, xlvi, lvii, lviii, lxiii, 1-1, 1-9, 1-16, 1-25, 2-2, 2-5, 2-6, 2-12, 2-13, 2-15, 2-21, 2-23, 2-27, 2-29, 2-32, 2-33, 2-34, 2-37, 2-38, 2-39, 2-40, 3-6, 3-7, 3-13, 3-15, 3-39, 3-42, 3-45, 3-48, 3-49, 4-2, 4-4, 4-52, 4-64, 4-66, 4-67, 4-69, 4-71, 4-72, 4-73, 4-74, 4-75, 4-76, 4-77, 4-78, 4-79, 4-80, 4-81, 4-82, 4-83, 4-84, 4-85, 4-87, 4-89, 4-90, 4-93, 4-94, 4-95, 4-102, 4-104, 4-107, 4-108, 4-110, 5-1, 5-35, 5-39, 5-52, 5-53, 5-55, 5-57, 5-60, 5-61, 5-62, 6-14, 6-56, 6-57, 6-59, 6-60, 6-61, 7-4, 8-6, 9-1, 9-3, 11-2, 11-5, 11-6, 11-7, 11-11, 11-14, 11-15, 11-16, 11-18, 11-19, 11-20, 11-21, B-2, B-3, B-4, B-5, B-6, B-7, B-8, B-12, B-13, B-14, B-16, B-17, B-18, B-19, B-20, B-21, B-22, B-23, B-25, B-26, B-28, B-29, B-30, B-32, B-33, B-36, B-37, B-38, B-40, B-41, B-42, D-7, D-8, D-9, D-15, D-16, D-17, D-18, D-19, D-21, D-25, D-26, D-28, D-29, D-30, D-31, D-36, D-37, D-38, D-52, D-58, D-59, D-62, D-64, D-68, D-69, D-70, D-75, D-85, D-86, D-87, D-89, D-92, D-96, D-100, D-101, D-109, D-114, D-115, D-116, D-117, D-118, D-127, D-131, D-132, D-133, D-135, D-139, D-140, D-141, D-142, D-145, D-146, D-147, D-149, D-155, D-156, D-159, D-160, D-161, D-163, D-169, D-173, D-174, D-175, D-181, D-182, D-188, D-192, D-193, D-196, D-197, D-198, D-207, D-210, D-211, D-212, D-213, D-214, D-218, D-219, D-230, D-235, D-236, D-238, D-242, D-244, D-253, D-264, D-265, D-269, D-278, D-279, D-282, D-283, D-285, D-286, D-287, D-288, D-289, D-290, D-291, D-292, D-294, D-295, D-296, D-297, D-298, D-299, D-300, D-301, D-306, D-307, D-311, D-313, D-314, D-316, D-317, D-318, D-319, D-320, D-321, D-323, D-324, D-325, D-327, D-330, D-332, D-333, D-335, D-336, D-337, D-341, D-343, D-348, D-349, D-356, D-357, D-362, D-364, D-366, D-368, D-371, D-372, D-374, D-376, D-378, D-379, D-383, D-384, D-385, D-386, D-387, D-388, D-390, D-391, D-392, D-393, D-394, D-395, D-397, D-398, D-399, D-400, D-401, D-402, D-403, D-404, D-405, D-407, D-409, D-410, D-411, D-412, D-414, D-417, D-422, D-440, D-449, D-455, D-457, D-459, D-461, D-464, D-466, D-468, D-469, D-474, D-478, D-484, D-494, D-497, D-498, D-504, D-505, D-507, D-509, D-510, D-511, D-512, D-519, D-520, D-522, D-524, D-526, D-527, D-528, D-530, D-531, D-533, D-534, D-535, D-536, D-537, D-538, D-539, D-540, D-541, D-543, D-544, D-545, D-550, D-552, D-583, D-586, D-606, D-609, D-610, D-611, D-613,

D-616, D-618, D-621, D-623, D-626, D-627, D-632, E-4, E-13, E-15, E-25, E-26, F-8, F-11, F-13, F-14, F-17, F-18, F-19, F-20, F-22, G-2, G-16, I-2, I-6, I-8
Scoping, xxvi, xxvii, xxviii, lxv, lxvi, 1-9, 1-11, 1-24, 1-25, 1-30, 6-1, 7-16, 7-17, 9-5, 9-6, 11-19, A-1, A-2, C-1, C-2, C-3, C-4, C-5, C-6, C-7, C-8, D-14, D-35, D-41, D-43, D-56, D-71, D-72, D-76, D-86, D-91, D-92, D-98, D-102, D-123, D-126, D-266, D-286, D-321, D-629
Seismic, 2-13, 3-15, 4-76, 4-77, 4-85, 4-86, 4-87, 4-107, 4-108, 4-109, B-12, B-14, B-22, D-68, D-95, D-147, D-148, D-183, D-218, D-219, D-238, D-267, D-314, D-331, D-334, D-339, D-341, D-343, D-348, D-349, D-363, D-386, D-387, D-389, D-410, D-421, D-422, D-430, D-442, D-444, D-455, D-457, D-478, D-535, D-544, D-620, D-623, E-22, E-24, F-2, F-3, F-6, F-10, F-11, F-12, F-17, F-20
Severe accidents, xxxiii, xlvi, xlvii, 2-40, 3-38, 4-72, 4-73, 4-84, 4-85, 4-86, 4-88, 4-89, 4-90, 6-56, 6-57, 6-58, 11-1, 11-19, B-14, D-71, D-104, D-105, D-127, D-144, D-148, D-187, D-190, D-218, D-264, D-265, D-280, D-284, D-286, D-293, D-296, D-297, D-312, D-313, D-314, D-317, D-318, D-319, D-323, D-325, D-326, D-327, D-328, D-329, D-330, D-336, D-337, D-338, D-339, D-340, D-341, D-344, D-346, D-349, D-361, D-375, D-427, D-429, D-436, D-438, D-440, D-442, D-444, D-446, D-461, D-495, D-541, D-616, D-620, D-632, F-2, F-4, F-5, F-7, F-9, F-13, F-17, F-20
Socioeconomic, xxxiv, xxxv, xxxvi, xlvii, xlix, lix, lx, 3-4, 3-5, 4-6, 4-7, 4-8, 4-9, 4-10, 4-11, 4-12, 4-98, 5-3, 5-8, 5-9, 5-10, 5-11, 5-12, 5-13, 5-14, 5-58, 5-59, 6-12, 6-13, 6-14, 6-15, 6-16, 6-58, 8-2, 8-3, 8-4, 8-6, 9-2, 9-4, 9-5, 11-2, 11-19, D-5, D-23, D-59, D-64, D-107, D-182, D-183, D-184, D-187, D-190, D-192, D-193, D-194, D-195, D-196, D-198, D-204, D-260, D-264, D-293, D-297, D-346, D-462, D-491, D-498
Solid waste, 3-35, 3-36, 3-37, 5-47, 5-48, 5-62, 6-47, 6-62, 8-5, 8-6, 9-3, 9-5, 11-11, 11-14, D-613, E-7, E-26, E-28
Spent fuel pool fires, xxiv, xxviii, xxxiii, xlvii, lxiii, lxiv, lxvi, 1-3, 1-25, 4-86, 4-94, 9-2, 9-5, B-14, D-6, D-52, D-67, D-107, D-108, D-113, D-114, D-115, D-131, D-153, D-185, D-265, D-281, D-306, D-314, D-315, D-316, D-317, D-318, D-319, D-325, D-326, D-327, D-328, D-329, D-331, D-333, D-334, D-335, D-337, D-339, D-340, D-341, D-346, D-350, D-351, D-355, D-359, D-360, D-366, D-391, D-405, D-417, D-418, D-419, D-420, D-423, D-424, D-425, D-426, D-427, D-428, D-429, D-431, D-433, D-435, D-436, D-437, D-438, D-439, D-440, D-441, D-442, D-443, D-444, D-445, D-446, D-447, D-448, D-449, D-450, D-451, D-452, D-453, D-494, D-495, D-498, D-514, D-522, D-530, D-533, D-535, D-536, D-538, D-541, D-544, F-1, F-2, F-3, F-4, F-5, F-7, F-9, F-10, F-11, F-12, F-13, F-14, F-15, F-16, F-17, F-18
Spent fuel pool leaks, xxiii, xxvi, xxxix, xlv, lxiii, lxvi, 1-3, 1-25, 3-19, 4-20, 4-23, 4-26, 4-70, 9-2, 9-3, 9-4, 9-6, B-23, B-24, D-6, D-52, D-67, D-78, D-97, D-130, D-131, D-153, D-195, D-196, D-214, D-220, D-221, D-224, D-226, D-227, D-228, D-229, D-230, D-232, D-234, D-237, D-247, D-248, D-386, D-428, D-430, D-454, D-455, D-456, D-457, D-458, D-459, D-460, D-461, D-462, D-463, D-464, D-465, D-466, D-467, D-468, D-469, D-470, D-471, D-472, D-473, D-474, D-475, D-476, D-477, D-478, D-479, D-480, D-481, D-482, D-483, D-484, D-485, D-486, D-488, D-492, D-

493, D-514, E-1, E-7, E-8, E-9, E-10, E-11, E-12, E-14, E-15, E-16, E-17, E-18, E-19, E-20, E-21, E-22, E-23, E-26, E-27, E-28

Stormwater, li, lii, 3-17, 3-21, 3-37, 4-20, 4-22, 4-23, 4-27, 4-34, 4-42, 4-43, 5-6, 5-23, 5-29, 5-30, 6-27, 6-32, 6-35, 11-20, D-223, D-225, D-228, D-232

Surface water, xxxiv, xxxv, xxxviii, xxxix, xlvii, li, lix, lx, lxiii, 3-11, 3-16, 4-10, 4-22, 4-23, 4-24, 4-25, 4-29, 4-30, 4-31, 4-38, 4-40, 4-80, 4-98, 5-23, 5-24, 5-25, 5-26, 5-28, 5-59, 6-24, 6-25, 6-26, 6-27, 6-28, 6-29, 6-31, 6-34, 6-58, 8-2, 8-3, 8-4, 9-2, 9-5, 11-7, 11-12, 11-20, 11-21, D-127, D-130, D-131, D-188, D-212, D-213, D-214, D-220, D-222, D-223, D-224, D-225, D-226, D-229, D-230, D-231, D-232, D-233, D-235, D-236, D-237, D-238, D-240, D-241, D-242, D-243, D-244, D-245, D-246, D-247, D-254, D-300, D-330, D-334, D-344, D-456, D-457, D-460, D-461, D-462, D-478, D-479, D-480, D-481, D-482, D-485, D-490, D-492, D-609, E-1, E-13, E-14, E-15, E-17, E-18, E-19, E-20, E-21

T

Tax, xxxiv, xxxv, xxxvi, 3-4, 3-6, 3-7, 3-44, 3-49, 4-6, 4-7, 4-8, 4-9, 5-9, 5-10, 5-58, 6-13, 6-14, 6-15, 6-17, 8-6, D-59, D-182, D-183, D-184, D-187, D-191, D-192, D-194, D-195, D-196, D-197, D-497, D-498, D-501, D-510

Terrorism, xxviii, xlvii, xlviii, lviii, lix, 4-3, 4-91, 4-94, 4-97, 4-98, 4-104, 5-58, 5-59, 8-3, B-22, B-30, B-32, D-5, D-149, D-175, D-265, D-278, D-294, D-297, D-299, D-347, D-350, D-351, D-352, D-353, D-361, D-366, D-367, D-368, D-369, D-392, D-410, D-425, D-449, D-487, D-498, D-514, D-532, D-535, D-536

Thermal impacts, xl, 3-22, 4-36, 4-39, 4-40, 4-41, 4-42, 4-43, 4-46, 11-20, D-210, D-421

Threatened species, xli, 3-28, 11-8, 11-20

Tornado, xlvi, lviii, 3-12, 4-73, 4-76, 4-78, 4-79, 4-80, 4-81, 4-82, 4-84, 4-85, 4-86, 4-87, 4-90, 4-104, 4-107, 5-57, 6-56, 11-15, D-298, D-313, D-314, D-324, D-342, D-346, D-360, D-366, D-387, D-392, D-394, D-410, D-496, D-508, D-535, F-10, G-2

Transmission lines, 2-2, 2-4, 3-1, 3-15, 3-21, 3-22, 4-15, 4-32, 5-3, 5-6, 6-6, 6-11, 6-32, 6-38, 6-43, 6-54, 11-20, D-183, D-184, D-195

Tribal, xxvii, 3-8, 3-13, 3-14, 3-32, 4-9, 5-35, 5-36, 11-9, A-1, C-1, C-2, C-3, C-4, C-5, C-11, D-35, D-75, D-100, D-261, D-263, D-265, D-266, D-267, D-529, D-564, D-607

Tritium, xxxiv, lxiii, 3-19, 3-20, 4-83, 11-20, D-66, D-67, D-137, D-221, D-225, D-228, D-234, D-240, D-277, D-301, D-302, D-454, D-455, D-456, D-475, D-476, D-477, D-481, D-487, D-493, D-618, E-8, E-12, E-19, E-20, E-22, E-23, E-24, E-25, E-26

U

Uranium, xxiv, xxxii, xlviii, 1-17, 1-23, 2-7, 2-8, 2-9, 2-10, 2-11, 2-28, 3-39, 3-40, 6-6, 6-46, 6-52, 6-61, 7-5, 11-3, 11-8, 11-10, 11-14, 11-16, 11-17, 11-21, B-10, B-11, B-12, B-37, D-64, D-65, D-101, D-141, D-170, D-204, D-216, D-269, D-294, D-304, D-307, D-325, D-373, D-399, D-403, D-414, D-415, D-452, D-453, D-491, D-496, D-499, D-517, D-529, D-546, D-617, D-624, F-18, I-1, I-3, I-4, I-8

W

Waste Confidence, xxiii, xxiv, xxvii, xxviii, lxv, lxvi, 1-1, 1-2, 1-3, 1-4, 1-11, 1-12, 1-22, 1-23, 1-24, 1-27, 1-28, 1-30, 1-31, 4-91, 4-100, 7-2, 7-18, 11-21, A-1, A-2, B-1, B-2, B-9, B-11, B-13, B-34, C-1, C-2, C-3, C-4, C-5, C-6, C-7, C-8, C-9, C-10, C-11, C-12, C-13, C-14, C-15, C-16, C-17, C-18, D-1, D-2, D-3, D-4, D-7, D-9, D-10, D-11, D-13, D-14, D-22, D-25, D-30, D-32, D-33, D-34, D-37, D-41, D-42, D-47, D-51, D-52, D-53, D-54, D-56, D-58, D-59, D-61, D-65, D-67, D-73, D-77, D-78, D-80, D-81, D-85, D-89, D-92, D-96, D-107, D-116, D-117, D-154, D-155, D-183, D-199, D-201, D-217, D-249, D-315, D-347, D-370, D-373, D-385, D-409, D-416, D-448, D-512, D-516, D-517, D-522, D-541, D-542, D-547, D-556, D-606, D-608, D-609, D-615, D-624, D-625, D-626, D-627, D-628, D-629, D-630, D-631, E-25

Wetlands, xxxiv, xxxv, lii, 3-2, 3-20, 3-21, 3-24, 3-45, 4-34, 5-27, 5-28, 6-11, 6-31, 6-32, 11-21, D-252

Y

Yucca Mountain, 1-16, 1-20, 1-28, 2-40, 4-72, 4-102, 5-20, 5-61, 5-64, 6-20, 6-42, 6-48, 6-61, 11-21, B-3, B-29, B-30, B-31, B-34, B-35, B-36, B-38, B-40, B-41, C-2, D-4, D-6, D-12, D-28, D-63, D-67, D-90, D-106, D-107, D-125, D-143, D-144, D-171, D-174, D-176, D-177, D-179, D-180, D-202, D-290, D-295, D-370, D-371, D-372, D-375, D-376, D-377, D-378, D-381, D-382, D-384, D-385, D-512, D-519, D-547, D-548, D-549, D-550, D-551, D-604, D-605, D-612, D-614, D-618, D-621

Yucca Mountain EIS, 5-20, 6-20, 6-42, 11-21, B-30, B-31, D-106, D-107, D-125, D-171, D-174, D-176, D-177, D-179, D-180

11.0 Glossary

Accident
See **Design basis accident and severe accident**

Adverse environmental impacts
Impacts that are determined to be harmful to the environment.

Aesthetics (visual resources)
The natural and cultural features of the landscape that can be seen and that contribute to the public's appreciative enjoyment of the environment. Visual resource or aesthetic impacts are generally defined in terms of a project's physical characteristics and potential visibility and the extent to which the project's presence would change the perceived visual character and quality of the environment in which it would be located.

Aging management (activity)
An application of either the aging management program or time-limited aging analysis to provide reasonable assurance that the intended functions of structures, systems, and components of spent fuel storage facilities are maintained during the license period of extended operation.

Aging management program
A program conducted by the licensee or certificate of compliance holder for addressing aging effects that may include prevention, mitigation, condition monitoring, and performance monitoring in accordance with the requirements of Title 10 of the *Code of Federal Regulations* (CFR) Parts 50, 54, and 72.

Air quality
Assessment of the health-related and visual characteristics of the air, often derived from quantitative measurements of the concentrations of specific injurious or contaminating substances. Air quality standards are the prescribed levels of substances in the outside air that cannot be exceeded during a specific time in a specified area.

Alternative
Reasonable means, other than the proposed action, by which to achieve the same purpose and satisfy the same need as the proposed action.

Aquatic biota
An organism that lives in, on, or near the water, including fish, macroinvertebrates, zooplankton, phytoplankton, macrophytes, and aquatic vegetation.

Aquatic ecosystem types:

- **Freshwater**
  Waters that contain a salt concentration or salinity of less than 0.5 parts per thousand (ppt) or 0.05 percent.
  - *Lentic*: Stagnant or slow-flowing fresh water (e.g., lakes and ponds).
  - *Lotic*: Flowing fresh water with a measurable velocity (e.g., rivers and streams).
- **Marine**
  Waters that contain a salt concentration of about 30 ppt (e.g., ocean overlying the continental shelf and associated shores).
- **Estuarine**
  Coastal bodies of water where freshwater merges with marine waters. These waterbodies are often semi-enclosed and have a free connection with marine ecosystems (e.g., bays, inlets, lagoons, and ocean-flooded river valleys). Salinity concentrations fluctuate between 0 and 30 ppt, varying spatially and temporally due to location and tidal activity.

Aquifer
An underground layer of permeable, unconsolidated sediments or porous or fractured bedrock that yields usable quantities of water to a well or spring.

Archaeological Resources Protection Act of 1979
A statute which requires Federal permitting for excavation or removal of archaeological resources from public or Native American lands.

As low as (is) reasonably achievable (ALARA)
Making every reasonable effort to maintain exposures to ionizing radiation as far below the dose limits as practical, consistent with the purpose for which the licensed activity is undertaken, taking into account the state of technology, the economics of improvements in relation to state of technology, the economics of improvements in relation to benefits to the public health and safety, and other societal and socioeconomic considerations, and in relation to utilization of nuclear energy and licensed materials in the public interest (see 10 CFR 20.1003).

Bare fuel
Spent fuel rods or assemblies that are separate from or can be loaded into containment systems such as canisters or casks.

Baseline
A quantitative expression of conditions, costs, schedule, or technical progress that constitutes the standard against which to measure the performance of an activity. For this generic environmental impact statement (GEIS), the baseline is the affected environment at the beginning of continued storage, taking into account the environmental impacts during reactor operations.

Biota
The combined flora and fauna of a region.

Boiling water reactor (BWR)
A reactor in which water, used as both coolant and moderator, boils in the core to produce steam, which drives a turbine connected to an electrical generator, thereby producing electricity.

Burnup
A measure of how much energy is extracted from the nuclear fuel before it is removed from the core. Its units are gigawatt-days (GWd) per tonne of uranium (MTU) in fresh fuel. Spent fuel is considered to have low burnup if the burnup is less than 45 GWd/MTU.

Candidate species
Animal or plant species for which the Fish and Wildlife Service (FWS) or National Marine Fisheries Service (NMFS) has on file sufficient information on vulnerability and threats to support a proposal to list it as endangered or threatened.

Canister
A large rugged cylinder containing one to six dozen spent fuel assemblies. A canister, typically made of a corrosion-resistant metal, is filled with inert gas and bolted or welded closed. The sealed canister is typically emplaced inside an outer shell of steel, concrete, lead, or other material as part of a dry cask storage system.

Cask
A heavily shielded container used for the dry storage or shipment (or both) of radioactive materials such as spent nuclear fuel (spent fuel) or other high-level radioactive waste. Casks are often made from lead, concrete, or steel. Casks must meet regulatory requirements and are not intended for long-term disposal in a repository.

Cladding
The thin-walled metal tube that forms the outer jacket of a nuclear fuel rod. It prevents corrosion of the fuel by the coolant within the nuclear reactor and the release of fission products into the coolant. Stainless steel and zirconium alloys are common cladding materials.

Clean Air Act (CAA)
Establishes national ambient air quality standards and requires facilities to comply with emission limits or reduction limits stipulated in State Implementation Plans (SIPs). Under this Act, construction and operating permits, as well as reviews of new stationary sources and major modifications to existing sources, are required. This statute also prohibits the Federal government from approving actions that do not conform to SIPs.

Climate change (Global climate change)
Changes in the Earth's surface temperature thought to be caused by the greenhouse effect and responsible for changes in global climate patterns. The greenhouse effect is the trapping and buildup of heat in the atmosphere (troposphere) near the Earth's surface. Some of the heat flowing back toward space from the Earth's surface is absorbed by water vapor, carbon dioxide, ozone, and certain other gases in the atmosphere and then reradiated back toward the Earth's surface.

Closed-cycle cooling
In this type of cooling-water system, the cooling water is recirculated through the condenser after the waste heat is removed by dissipation to the atmosphere, usually by circulating the water through large cooling towers constructed for that purpose.

***Code of Federal Regulations* (CFR)**
The codification of the general and permanent rules published in the *Federal Register* by the executive departments and agencies of the Federal government. It is divided into 50 titles that represent broad areas subject to Federal regulation. Each volume of the CFR is updated once each calendar year and is issued on a quarterly basis.

Committed dose equivalent
The dose equivalent to organs or tissues of reference that will be received from an intake of radioactive material by an individual during the 50-year period following the uptake.

Committed effective dose equivalent (CEDE)
The sum of the products of the weighting factors for body organs or tissues that are irradiated and the committed dose equivalent to these organs or tissues.

Compact
A group of two or more states formed to dispose of low-level radioactive waste on a regional basis. The Low-Level Radioactive Waste Policy Act of 1980 encouraged states to form compacts to ensure continuing low-level waste disposal capacity. As of December 2000, 44 states have formed 10 compacts.

Confinement
The ability of a storage system to retain radioactive material, including gases and particulates, within the system.

Consolidated storage
A spent fuel storage facility designed to store spent fuel produced from multiple nuclear power plants.

Continued storage
The time period during which spent fuel is stored after the end of the licensed life for operations of a nuclear reactor and prior to disposal in a permanent repository.

Cooling system (Reactor)
System used to remove energy from the reactor core and transfer that energy either directly or indirectly to the steam turbine.

Cooling system (Spent Fuel)
System used to remove energy from spent fuel pools that typically consists of pumps to circulate cooling water through the system, a purification system of filters and a demineralizer, and a heat exchanger (which transfers the heat from the spent fuel pool cooling system to the service-water system or its equivalent).

Core damage frequency
An expression of the likelihood that, given the way a reactor is designed and operated, an accident could cause the fuel in the reactor to be damaged.

Corrective action
Measures taken to rectify conditions adverse to quality, safety, or compliance with NRC requirements.

Council on Environmental Quality (CEQ)
Established by the National Environmental Policy Act (NEPA). Council on Environmental Quality regulations (40 CFR Parts 1500–1508) describe the process for implementing NEPA, including preparation of environmental assessments and environmental impact statements, and the timing and extent of public participation. As an independent regulatory body, the NRC's policy is to take account of the regulations of the Council on Environmental Quality published November 29, 1978 (43 FR 55978-56007) voluntarily, to the extent applicable.

Critical habitat
Specific geographic areas, whether occupied by a listed species or not, that are essential for its conservation and that have been formally designated by rule published in the *Federal Register*.

Criticality
The normal operating condition of a reactor, in which nuclear fuel sustains a fission chain reaction. A reactor achieves criticality when each fission event releases a sufficient number of neutrons to sustain an ongoing series of reactions. Nuclear fuel that is in storage or being handled is required to avoid criticality, or remain "subcritical."

Cultural resource (historic resource)
The remains of past human activity and include prehistoric era and historic era archaeological sites, historic districts, buildings, or objects with an associated historical, cultural, archaeological, architectural, community, or aesthetic value. Historic and cultural resources also include traditional cultural properties that are important to a living community of people for maintaining their culture.

Decommissioning
The process of safely closing a nuclear power plant (or other facility where nuclear materials are handled) to retire it from service after its useful life has ended. This process primarily involves decontaminating the facility to reduce residual radioactivity and then releasing the property for unrestricted use (see 10 CFR 20.1003) or (under certain conditions) restricted use. This often includes dismantling the facility or dedicating it to other purposes. Decommissioning begins after the nuclear fuel, coolant, and radioactive waste are removed from the reactor.

Decommissioning GEIS (NUREG-0586)
A generic environmental evaluation of the scope and impact of environmental effects associated with the decommissioning of nuclear power reactors as residual radioactivity at the site is reduced to levels that allow for termination of the NRC license.

DECON
A method of decommissioning in which the equipment, structures, and portions of a facility and site containing radioactive contaminants are removed and safety buried in a low-level radioactive waste landfill or decontaminated to a level that permits the property to be released for unrestricted use shortly after cessation of operations.

Deep dose equivalent
The dose equivalent at a tissue depth of 1 cm (0.39 in.); applies to external whole-body exposure.

Department of Energy (DOE)
The DOE is a cabinet-level agency that has both important energy- and national security-related missions. DOE officials oversee the laboratories that were once primarily responsible for creating nuclear weapons, along with implementing policies geared toward strengthening the United States' sources of energy. The DOE carries out policies ranging from nuclear power to fossil fuels to alternative energy sources.

Design basis events
Conditions of normal operation, design basis accidents, external events, and natural phenomena, for which the plant must be designed to ensure the capability to prevent or mitigate the consequences of accidents that could result in potential offsite exposures.

Design basis accident
A postulated accident that a nuclear facility must be designed and built to withstand without loss to the systems, structures, and components necessary to ensure public health and safety.

Disposal
The act of placing unwanted materials in an area with the intent of not recovering in the future.

Dose
A general term which may be used to refer to the amount of energy absorbed by an object or person per unit mass. Known as the "absorbed dose," this reflects the amount of energy that ionizing radiation sources deposit in materials through which they pass, and is measured in units of radiation-absorbed dose (rad). The related international system unit is the gray (Gy), where 1 Gy is equivalent to 100 rad. See also, **total effective dose equivalent (TEDE)**, **committed effective dose equivalent (CEDE)**, and **deep dose equivalent**.

Dose equivalent
The product of the absorbed dose in tissue, quality factor, and all other modifying factors at the location of interest. The units of dose equivalent are the rem and Sievert (Sv).

Dry cask storage
A method for storing spent fuel in special containers known as casks. After fuel has been cooled in a spent fuel pool for at least 1 year, dry cask storage allows approximately one to six dozen spent fuel assemblies to be sealed in casks and surrounded by inert gas.

Dry transfer system (DTS)
A facility that enables retrieval of spent fuel from dry cask storage for inspection or repackaging without the need to return the spent fuel to a pool. Proposed designs for dry transfer systems consist of concrete and steel structures designed to provide both confinement and shielding during fuel transfer operations.

Effective dose equivalent
The sum of the products of the dose equivalent to the organ or tissue and the weighting factors applicable to each of the body organs or tissues that are irradiated.

Effluent
A discharge of gas or liquid into the environment, partially or completely treated or in its natural state. This term typically refers to wastes discharged into surface waters.

Electromagnetic fields
The field of energy resulting from the movement of alternating electric current (AC) along the path of a conductor, composed of both electrical and magnetic components and existing in the immediate vicinity of, and surrounding, the electric conductor. Electromagnetic fields exist in both high-voltage electric transmission power lines and in low-voltage electric conductors in homes and appliances.

Endangered species
Animal or plant species in danger of extinction throughout all or a significant portion of its range.

Endangered Species Act of 1973 (ESA)
Requires consultation with the FWS and/or the NMFS to determine whether endangered or threatened species or their habitats will be affected by a proposed activity and what, if any, mitigation measures are needed to address the impacts.

ENTOMB
A method of decommissioning nuclear facilities in which radioactive contaminants are encased in a structurally long-lived material, such as concrete. The entombment structure is appropriately maintained and continued surveillance is carried out until the radioactivity decays to a level permitting unrestricted release of the property.

Enrichment
Increasing the proportion of uranium atoms that can be “split” by fission to release energy (usually in the form of heat) that can be used to produce electricity.

Entrainment
The incorporation of all life stages of fish and shellfish with intake water flow entering and passing through a cooling-water-intake structure and into a cooling-water system (40 CFR 125.83).

Environmental assessment (EA)
A concise public document that a Federal agency prepares under NEPA to provide sufficient evidence and analysis to determine whether a proposed action requires preparation of an environmental impact statement or whether a Finding of No Significant Impact can be issued. An EA must include brief discussions on the need for the proposed action and the environmental impacts of the proposed action and the no-action alternative.

Environmental impact statement (EIS)
A document required of Federal agencies by NEPA for major proposals or legislation that will or could significantly affect the environment. The primary purpose of an EIS is to serve as an action-forcing device to ensure that the policies and goals defined in the Act are infused into the ongoing programs and actions of the Federal government. An EIS provides full and fair

discussion of significant environmental impacts and shall inform decision-makers and the public of the reasonable alternatives which would avoid or minimize adverse impacts or enhance the quality of the human environment. The EIS should be used by Federal officials in conjunction with other relevant material to plan actions and make decisions.

Environmental justice
The fair treatment of people of all races, cultures, incomes, and educational levels with respect to the development, implementation, and enforcement of environmental laws, regulations, and policies.

Environmental Protection Agency (EPA)
A Federal agency, created for the purpose of promoting human health by protecting the nation's air, water, and soil from harmful pollution by enforcing environmental regulations based on laws passed by Congress. The agency performs environmental assessments, conducts research, and provides education. It has the responsibility of maintaining and enforcing national standards under a variety of environmental laws (e.g., Clean Air Act), in consultation with State, Tribal, and local governments. It delegates some permitting, monitoring, and enforcement responsibility to States and Native American Tribes. EPA enforcement powers include fines, sanctions, and other measures. The agency also works with industries and all levels of government in a wide variety of voluntary pollution prevention programs and energy conservation efforts.

EPA Air Quality Designations

- **Attainment**: An EPA air quality designation for any area that meets the national primary or secondary ambient air quality standard for the pollutant.
- **Nonattainment**: An EPA air quality designation for any area that does not meet (or that contributes to ambient air quality in a nearby area that does not meet) the national primary or secondary ambient air quality standard for the pollutant.
- **Unclassifiable**: Any area that cannot be classified on the basis of available information as meeting or not meeting the national primary or secondary ambient air quality standard for the pollutant.

Essential fish habitat (EFH)
Those waters and substrates needed by Federally managed marine and anadromous fish for spawning, breeding, feeding, or growth to maturity.

Fish and Wildlife Service (FWS)
A Federal agency within the U.S. Department of the Interior responsible for the management of fish, wildlife, and natural habitats. The FWS's major responsibilities are for migratory birds, endangered species, certain marine mammals, and freshwater and anadromous fish.

Fuel assembly (fuel bundle)
A structured group of fuel rods, which are long, slender, metal tubes containing pellets of fissionable material, which provide fuel for nuclear reactors. Depending on the design, each reactor vessel may have dozens of fuel assemblies (also known as fuel bundles), each of which may contain 200 or more fuel rods.

Fuel cycle
The series of steps involved in supplying fuel for nuclear power reactors include the following:

- uranium recovery to extract (or mine) uranium ore, and concentrate (or mill) the ore to produce "yellowcake",
- conversion of yellowcake into uranium hexafluoride (UF6),
- enrichment to increase the concentration of uranium-235 (U-235) in UF6,
- fuel fabrication to convert enriched UF6 into fuel for nuclear reactors,
- use of the fuel in reactors (nuclear power, research, or naval propulsion),
- interim storage of spent fuel,
- reprocessing of high-level waste to recover the fissionable material remaining in the spent fuel (currently not done in the United States), and
- final disposition (disposal) of high-level waste.

The NRC regulates these processes, as well as the fabrication of mixed oxide nuclear fuel, which is a combination of uranium and plutonium oxides.

Fuel reprocessing (recycling)
The processing of reactor fuel to separate the unused fissionable material from waste material. Reprocessing extracts isotopes from spent fuel so they can be used again as reactor fuel.

Fugitive dust
Particulate air pollution released to the ambient air from ground-disturbing activities related to construction, manufacturing, or transportation (i.e., the discharges are not released through a confined stream such as a stack, chimney, vent, or other functionally equivalent opening). Specific activities that generate fugitive dust include, but are not limited to, land-clearing operations, travel of vehicles on disturbed land or unpaved access roads, or onsite roads.

Generic environmental impact statement (GEIS)
In general, a GEIS assesses the scope and impact of environmental effects that would be associated with an action at numerous sites. This GEIS assesses the scope and impact of environmental effects associated with the continued storage of spent fuel after the licensed life of a nuclear power reactor.

Geologic repository
An excavated, underground facility that is designed, constructed, and operated for safe and secure permanent disposal of high-level radioactive waste. A geologic repository uses an engineered barrier system and a portion of the site's natural geology, hydrology, and geochemical systems to isolate the radioactivity of the waste.

Greater-than-class-C waste (GTCC)
GTCC waste means low-level radioactive waste that exceeds the concentration limits of radionuclides established for Class C waste in 10 CFR 61.55.

Greenhouse gases
Gases that trap heat in the atmosphere. The most common greenhouse gases are carbon dioxide, methane, nitrous oxide, and fluorinated gases. Greenhouse gases contribute to global climate change.

Groundwater
The water found beneath the Earth's surface, usually in porous rock formations (aquifers) or in a zone of saturation, which may supply wells and springs, as well as base flow to major streams and rivers. Generally, it refers to all water contained in the ground.

Habitat
Area in which a plant or animal lives and reproduces.

Half-life
The time in which one-half of the atoms of a particular radioactive substance disintegrate into another nuclear form. Measured half-lives vary from millionths of a second to billions of years. Also called physical or radiological half-life.

Hardened onsite storage (HOSS)
A term referring to a proposed strategy to enhance the safety and security of spent fuel storage in dry casks or vault systems. As described by proponents, HOSS is the preferred end-point of a process that involves moving spent fuel from dense-packed cooling pools and into dry storage systems at reactor sites. The HOSS concept adds berms to conventional dry storage systems with the intent of offering greater resistance to potential terrorist attacks using aircraft or conventional weapons.

Hazardous waste
A solid waste or combination of solid wastes that, because of its quantity, concentration, or physical, chemical, or infectious characteristics, may (1) cause or significantly contribute to an increase in mortality or an increase in serious irreversible or incapacitating reversible illness or (2) pose a substantial present or potential hazard to human health or the environment when

improperly treated, stored, transported, disposed of, or otherwise managed (as defined in the Resource Conservation and Recovery Act, as amended, Public Law 94-580).

High-level radioactive waste (HLW)
The highly radioactive materials produced as byproducts of fuel reprocessing or of the reactions that occur inside nuclear reactors. HLW includes the following:

- irradiated spent fuel discharged from commercial nuclear power reactors,
- the highly radioactive liquid and solid materials resulting from the reprocessing of spent fuel, which contain fission products in concentration (this includes some reprocessed HLW from defense activities and a small quantity of reprocessed commercial HLW), and
- other highly radioactive materials that the Commission may determine require permanent isolation.

Historic property
Any prehistoric or historic district, site, building, structure, or object included in, or eligible for inclusion in, the *National Register of Historic Places* maintained by the Secretary of the Interior. Historic properties also include artifacts, records, and remains that are related to and located within such properties. The term includes properties of traditional religious and cultural importance to an Indian Tribe or Native Hawaiian organization that meet the *National Register* criteria (see also 36 CFR 800.16(l)(1)).

Hydrology
The study of water that considers its occurrence, properties distribution, circulation, and transport and includes groundwater, surface water, and rainfall.

Impingement
The entrapment of all life stages of fish and shellfish on the outer part of an intake structure or against a screening device during periods of water withdrawal (40 CFR 125.83).

Independent spent fuel storage installation (ISFSI)
A complex designed and constructed for the interim storage of spent fuel; solid, reactor-related, GTCC waste; and other associated radioactive materials. A spent fuel storage facility may be considered independent, even if it is located on the site of another NRC-licensed facility. The most common design for an ISFSI, at this time, is a concrete pad with dry casks containing spent fuel bundles. ISFSIs are used by operating plants that require increased spent fuel storage capability because their spent fuel pools are nearly full.

Institutional controls
In the context of continued storage of spent fuel, institutional controls refers to actions taken by an institution (e.g., a government, corporation, or other entity) for long-term site management

and control of radioactive waste. Institutional controls at storage facilities include controlling site access, implementation of aging management programs, performing maintenance or remedial actions, monitoring, and controlling or remediating releases.

Interim storage
The storage of spent fuel, typically in dry cask storage systems, from the time it is removed from a spent fuel pool until disposal in a geologic repository.

Isotope
Two or more forms (or atomic configurations) of a given element that have identical atomic numbers (the same number of protons in their nuclei) and the same or very similar chemical properties but different atomic masses (different numbers of neutrons in their nuclei) and distinct physical properties. Thus, carbon-12, carbon-13, and carbon-14 are isotopes of the element carbon, and the numbers denote the approximate atomic masses. Among their distinct physical properties, some isotopes (known as radioisotopes) are radioactive because their nuclei emit radiation as they strive toward a more stable nuclear configuration. For example, carbon-12 and carbon-13 are stable, but carbon-14 is unstable and radioactive.

License amendment
Changes to the operating license for a nuclear power plant such as a change to the technical specifications, system modifications, or changes to operating procedures that require approval by the NRC before they can be implemented by a licensee.

License renewal
Renewal of the operating license of a nuclear power plant or ISFSI.

License Renewal GEIS (NUREG-1437)
A generic environmental evaluation of the scope and impact of environmental effects associated with the continued operation of nuclear power plants during the license renewal term.

Licensee
A company, organization, institution, or other entity to which the NRC or an Agreement State has granted a general license or specific license to construct or operate a nuclear facility, or to receive, possess, use, transfer, or dispose of source material, byproduct material, or special nuclear material.

Licensed material
Source material, byproduct material, or special nuclear material that is received, possessed, used, transferred, or disposed of under a general license or specific license issued by the NRC or Agreement States.

Licensing basis
The aggregate documents or technical criteria that provides the basis upon which the NRC issues a license to construct or operate a nuclear facility; to conduct operations involving the emission of radiation; or to receive, possess, use, transfer, or dispose of source material, byproduct material, or special nuclear material.

Low-income populations
Persons whose average family income is below the poverty line. The poverty line takes into account family size and age of individuals in the family. In 2013, the poverty line for a family of four with two children below the age of 18 was $23,624. For any family below the poverty line, all family members are considered to be below the poverty line.

Low-level waste (LLW)
A general term for a wide range of items that have become contaminated with radioactive material or have become radioactive through exposure to neutron radiation. The radioactivity in these wastes can range from just above natural background levels to much higher levels, such as seen in parts from inside the reactor vessel in a nuclear power reactor.

Mitigation
A method or process by which impacts from actions can be made less injurious to the environment through appropriate protective measures.

Mixed oxide fuel (MOX)
A type of nuclear reactor fuel (often called "MOX") that contains plutonium oxide mixed with either natural or depleted uranium oxide, in ceramic pellet form. Using plutonium reduces the amount of highly enriched uranium needed to produce a controlled reaction in commercial light-water reactors.

Mixed waste
Material that contains two components: LLW and hazardous waste, as defined in EPA regulations.

Monitoring
Periodic or continuous processes and activities necessary to assess the status of the environment that is typically part of a structured program required or approved by a regulatory agency responsible for protection of human health and safety and the environment.

Municipal solid waste
Residential solid waste and some nonhazardous commercial, institutional, and industrial wastes.

National Ambient Air Quality Standards (NAAQS)
Air quality standards established by the Clean Air Act, as amended. The primary NAAQS specify maximum outdoor air concentrations of criteria pollutants that would protect the public health within an adequate margin of safety. The secondary NAAQS specify maximum concentrations that would protect the public welfare from any known or anticipated adverse effects of a pollutant.

National Environmental Policy Act of 1969 (NEPA)
An Act requiring Federal agencies to prepare a detailed statement on the environmental impacts of their proposed major actions that may significantly affect the quality of the human environment.

National Historical Preservation Act of 1966 (NHPA)
Section 106 of the NHPA addresses the impacts of Federal undertakings on historic properties. Undertakings are defined in the NHPA as any project or activity that is funded or under the direct jurisdiction of a Federal agency, or any project or activity that requires a Federal permit, license, or approval (see also 36 CFR 800.16(y)).

National Marine Fisheries Service (NMFS)
A Federal agency responsible for the stewardship and management of the nation's living marine resources and their habitat within the United States' Exclusive Economic Zone, which extends seaward 200 nautical miles from the coastline (about 370 kilometers). The NMFS is a division of the National Oceanic and Atmospheric Administration within the Department of Commerce.

Natural phenomena
Events that occur in nature such as earthquakes, tornadoes, hurricanes, floods, and tsunamis.

No-action alternative
In general, the no-action alternative of an EIS assumes that the proposed action would not take place; the resulting environmental impacts from taking no action would be compared with the impacts of permitting the proposed action or an alternative action. For this GEIS, the no-action alternative represents a decision by the Nuclear Regulatory Commission to not proceed with a rulemaking that codifies the impact determinations in this GEIS.

Nonradioactive nonhazardous waste
Waste that is neither radioactive nor hazardous and typically deposited in a landfill.

Nuclear fuel
Fissionable material that has been enriched to a composition that will support a self-sustaining fission chain reaction when used to fuel a nuclear reactor, thereby producing energy (usually in the form of heat or useful radiation) for use in other processes.

Nuclear power plant
A facility that uses a nuclear reactor to generate electricity.

Nuclear reactor
A device in which nuclear fission may be sustained and controlled in a self-supporting nuclear reaction. There are many types of reactors, but all incorporate certain features, including fissionable material or fuel, a moderating material (unless the reactor is operated on fast neutrons), a reflector to conserve escaping neutrons, provisions of removal of heat, measuring and controlling instruments, and protective devices. The reactor is the principal component of a nuclear power plant.

Nuclear waste
A subset of radioactive waste that includes unusable byproducts produced during the various stages of the nuclear fuel cycle, including recovery (or extraction), conversion, and enrichment of uranium; fuel fabrication; and use of the fuel in nuclear reactors. Specifically, these stages produce a variety of nuclear waste materials, including uranium mill tailings, depleted uranium, and spent (depleted) fuel, all of which are regulated by the NRC. By contrast, "radioactive waste" is a broader term, which includes all wastes that contain radioactivity, regardless of how they are produced.

Occupational dose
The dose received by an individual in the course of employment in which the individual's assigned duties involves exposure to radiation or to radioactive material. Occupational dose is restricted by NRC regulations under 10 CFR Part 20, Subpart C.

Occupational Safety and Health Administration (OSHA)
A Federal agency in the Department of Labor whose mission is to prevent work-related injuries, illnesses, and deaths. Congress created OSHA under the Occupational Safety and Health Act on December 29, 1970.

Once-through cooling system
In this cooling system, circulating water for condenser cooling is obtained from an adjacent body of water, such as a lake or river, passed through the condenser tubes, and returned directly at a higher temperature to the adjacent body of water.

Population dose
Dose received collectively by a population.

Power block
The buildings and components directly involved in generating electricity at a power plant. At a nuclear power plant, the components of the power block vary with the reactor design, but always include the reactor and turbine building, and usually include several other buildings that

house access, reactor auxiliary, safeguards, waste processing, or other nuclear generation support functions.

Pressurized water reactor (PWR)
A power reactor in which thermal energy is transferred from the core to a heat exchanger by high-temperature water kept under high pressure in the primary system. Steam is generated in the heat exchanger in a secondary circuit.

Private Fuel Storage Facility (PFSF)
A proposed away-from-reactor ISFSI on the Reservation of the Skull Valley Band of Goshute Indians in Tooele County, Utah. The NRC analyzed the environmental impacts of constructing and operating the PFSF in NUREG–1714.

Probability weighted consequence
A measure of the severity of an environmental impact or accident that accounts for both the likelihood that the event occurs and the consequences if the event does occur. Where both the likelihood and consequences (e.g., cumulative dose, cost to the local economy, or area of land contamination) can be quantified, it is the product of these two factors.

Proposed species
Animal or plant species that is proposed for inclusion under Section 4 of the Endangered Species Act.

Radiation (ionizing radiation)
Alpha particles, beta particles, gamma rays, x-rays, neutrons, high-speed electrons, high-speed protons, and other particles capable of producing ions, which are atoms or molecules with a net electric charge due to the loss or gain of one or more electrons. Radiation, as used in the NRC's standards for radiation protection, 10 CFR Part 20, does not include natural sources of radiation such as soil or the sun or non-ionizing radiation, such as radio- or microwaves, or visible, infrared, or ultraviolet light (see also 10 CFR 20.1003).

Radioactivity
The property possessed by some elements (e.g., uranium) of spontaneously emitting energy in the form of radiation as a result of the decay (or disintegration) of an unstable atom. Radioactivity is also the term used to describe the rate at which radioactive material emits radiation. Radioactivity is measured in curies (Ci) and becquerels (Bq).

Radioisotope (radionuclide)
An unstable isotope of an element that decays or disintegrates spontaneously, emitting radiation. Approximately 5,000 natural and artificial radioisotopes have been identified.

Refurbishment
Repair or replacement of spent fuel storage systems, structures, and components.

Remediation
The restoration of a site by removal of pollution or contamination from the site environment, consistent with regulatory standards, for the protection of public health and safety and the environment.

Repackaging
Replacement of the canister and/or cask which houses spent fuel assemblies.

Repository
See **Geologic repository**.

Reprocessing
See **Fuel reprocessing**.

Risk
The combined probability of an accident with the consequences of that accident. In other words, the NRC examines the following questions: (1) What can go wrong? (2) How likely is it? (3) What are the consequences? Where both the likelihood and consequences can be quantified, it is the product of the likelihood and consequences. See also **Probability weighted consequence**. More information can be found at http://www.nrc.gov/aboutnrc/regulatory/risk-informed.html.

Risk-informed regulation
An approach to regulation taken by the NRC, which is guided by an assessment of safety significance or relative risk. This approach ensures that the regulatory burden imposed by an individual regulation or process is appropriate to its importance in protecting the health and safety of the public and the environment.

Risk-significant
"Risk-significant" can refer to a facility's system, structure, component, or accident sequence that exceeds a predetermined limit for contributing to the risk associated with the facility. The term also describes a level of risk exceeding a predetermined "significance" level.

Rulemaking
The process by which NRC formulates, amends, or repeals regulations.

Safeguards
The use of material control and accounting programs to verify that all special nuclear material is properly controlled and accounted for, as well as the physical protection (or physical security)

equipment and security forces. Requirements for physical protection of plants and materials are found in 10 CFR Parts 37 and 73.

Safety-related
Systems, structures, components, procedures, and controls (of a facility or process) that are relied upon to remain functional during and following design basis events. Their functionality ensures that key regulatory criteria, such as levels of radioactivity released, are met.

SAFSTOR
A method of decommissioning in which a nuclear facility is placed and maintained in a condition that allows the facility to be safely stored and subsequently decontaminated (deferred decontamination) to levels that permit release for unrestricted use.

Scoping
An early and open process for determining the scope of issues to be addressed and for identifying the significant issues related to a proposed action. During scoping, an agency will solicit stakeholder input.

Severe accident (beyond-design-basis accident)
Accidents that may challenge safety systems at a level much higher than expected. See also **Design basis accident**.

Shielding
Any material or obstruction that absorbs radiation and thus tends to protect personnel or materials from the effects of ionizing radiation. Shielding also refers to the resulting ability of a system to limit the dose rate at designated locations to acceptable regulatory limits.

Small modular reactors
Nuclear power plants that are smaller in size (e.g., 300 MW(e)) than current generation baseload plants (1,000 MW(e) or higher). These compactly designed reactors are factory-fabricated and can be transported by truck or rail to a nuclear power site.

Socioeconomic
Social and economic characteristics of a human population. Includes both the social impacts of economic activity and the economic impacts of social activity.

Spent fuel (spent nuclear fuel)
Nuclear reactor fuel that has been removed from a nuclear reactor because it can no longer sustain power production for economic or other reasons.

Spent fuel pool
An underwater storage and cooling facility for spent fuel assemblies that have been removed from a reactor.

Stormwater
Stormwater runoff, snowmelt runoff, and surface runoff and drainage.

Surface water
Water on the Earth's surface that is directly exposed to the atmosphere, as distinguished from water in the ground (i.e., groundwater).

Terrestrial
Belonging to or living on land.

Thermal impacts
Impacts to the environment, typically aquatic ecosystems, that result from the release of heat energy.

Threatened species
Animal or plant species likely to become endangered within the foreseeable future throughout all or a significant portion of its range. Requirements for declaring a species threatened are contained in the Endangered Species Act.

Total effective dose equivalent (TEDE)
Sum of the effective dose equivalent (for external exposure) and the CEDE (for internal exposure).

Transmission line
A set of conductors, insulators, supporting structures, and associated equipment used to move large quantities of power at high voltage, usually over long distances between a generating or receiving point and major substations or delivery points.

Tritium
A radioactive isotope of hydrogen with one proton and two neutrons. It decays by beta emission, which is the emission of a very low energy beta particle, and transforms to stable, nonradioactive helium. It has a radioactive half-life of about 12.5 years. Water containing tritium is normally released from nuclear power plants under controlled, monitored conditions that the NRC mandates to protect public health and safety. The NRC evaluates abnormal releases of tritium-contaminated water. More information about tritium from nuclear power plants can be found at http://www.nrc.gov/reading-rm/doccollections/fact-sheets/tritium-radiationfs.html.

Uranium
A radioactive element with the atomic number 92 and, as found in natural ores, an atomic weight of approximately 238. The two principal natural isotopes are uranium-235 (0.7 percent of natural uranium) and uranium-238 (99.3 percent of natural uranium). Natural uranium also includes a minute amount of uranium-234. Uranium-235 is the primary isotope used to produce a chain reaction in a nuclear power reactor. Natural uranium must be processed, or enriched, to increase the concentration of uranium-235, to be used as fuel for a nuclear power reactor.

Waste classification (classes of waste)
Classification of LLW according to its radiological hazard. The classes include Class A, B, and C, with Class A being the least hazardous and accounting for 96 percent of LLW. As the waste class and hazard increase, the regulations established by the NRC require progressively greater controls to protect the health and safety of the public and the environment.

Waste Confidence
Historically, Waste Confidence has been the NRC's generic determination regarding the safety and environmental impacts of storing spent fuel beyond the licensed life for operations of a nuclear power plant. As part of this rulemaking, the name used for the rule will be changed from "Waste Confidence" to "Continued Storage."

Waste, radioactive
Radioactive materials at the end of a useful life cycle or in a product that is no longer useful and should be properly disposed.

Wetlands
Areas that are inundated or saturated by surface water or groundwater and that typically support vegetation adapted for life in saturated soils. Wetlands generally include swamps, marshes, bogs, and similar areas (e.g., sloughs, potholes, wet meadows, river overflow areas, mudflats, natural ponds).

Yucca Mountain
Yucca Mountain, Nevada, was the DOE's proposed location for a geologic repository for spent fuel and HLW. After the DOE requested to withdraw the application for the Yucca Mountain site in 2010 and the NRC's Atomic Safety and Licensing Board dismissed the proceeding, the U.S. Court of Appeals in 2013 ordered the NRC resume its license review and the Commission complied. Site selection remains an ongoing process.

Yucca Mountain EIS
The environmental review prepared by the DOE that discusses the potential impacts from constructing, operating and monitoring, and eventually closing a geologic repository at Yucca Mountain in southern Nevada for the disposal of spent fuel and HLW.

Appendix A

Scoping Comments

Appendix A

Scoping Comments

In this appendix, the U.S. Nuclear Regulatory Commission (NRC) incorporates, by reference, the *Waste Confidence Generic Environmental Impact Statement Scoping Process Summary Report* (NRC 2013a), which was prepared by the NRC in response to comments received on the scope of the environmental review. The NRC issued the Scoping Summary Report on March 4, 2013.

The Scoping Summary Report is available for public inspection in the NRC Public Document Room, located at One White Flint North, 11555 Rockville Pike, Rockville, Maryland, 20852 or from the NRC's Agencywide Documents Access and Management System (ADAMS). The ADAMS Public Electronic Reading Room is accessible at http://www.nrc.gov/reading rm/adams/web-based.html. The Scoping Summary Report is listed under Accession No. ML13060A128. Persons who do not have access to ADAMS or who encounter problems in accessing the documents located in ADAMS should contact the NRC's Public Document Room reference staff by telephone at 1-800-397-4209 or 301-415-4737 or by e-mail at pdr@nrc.gov.

On October 25, 2012, the NRC published in the *Federal Register* a Notice of Intent to prepare an environmental impact statement and conduct scoping, "Consideration of Environmental Impacts of Temporary Storage of Spent Fuel After Cessation of Reactor Operation" (77 FR 65137). The notice described the NRC's intent to prepare a generic environmental impact statement (GEIS) and conduct webcast public scoping meetings and webinars and requested comments on the scope of the GEIS. Through the notice, the NRC invited Federal, Tribal, State, and local governments; organizations; and members of the public to provide comments on the scope of the GEIS no later than January 2, 2013.

During the 70-day scoping period, the NRC held two public webcast scoping meetings and two scoping webinars. The meetings and webinars each began with a slide presentation by NRC, which was followed by a question-and-answer period and a block of time dedicated to listening to and transcribing public scoping comments. The NRC considered all comments received during the scoping meetings and webinars and all written comments submitted in-person at the November 14, 2012 afternoon meeting. Appendix C provides the ADAMS accession numbers for the meeting summaries.

In addition, the NRC received hundreds of written comment letters through mail, fax, and www.regulations.gov (Docket ID NRC–2012–0246) during the comment period. Comments received after the January 2, 2013 closing date were considered where practicable. The NRC

reviewed and considered written comments together with the comments received during the public meetings and webinars. Individual comments each received a unique comment identification code, to ensure that each comment could be tracked, and received a response. Comments were consolidated and categorized according to subject matter or topic. The Scoping Summary Report contains the NRC responses to these grouped comments. Separately, the NRC published a document containing the text of the comments, *Scoping Comments on the Waste Confidence Generic Environmental Impact Statement* (NRC 2013b). This document contains a table that identifies the scoping comments made in each category and provides those scoping comment excerpts organized by scoping comment category.

As a result of the scoping process, the NRC identified and eliminated peripheral issues that are not covered in the GEIS. The Scoping Summary Report provides responses that either discuss why particular topics or concerns are outside the scope of the GEIS or indicates concerns or topics that are in scope and are evaluated in the GEIS.

Further detail regarding scoping, public comments received, and the NRC's responses can be found in the full text of the Scoping Summary Report (NRC 2013a). Comments received on the draft GEIS are included in Appendix D of this GEIS.

References

77 FR 65137. October 25, 2012. "Consideration of Environmental Impacts of Temporary Storage of Spent Fuel After Cessation of Reactor Operation." *Federal Register*. U.S. Nuclear Regulatory Commission, Washington, D.C.

NRC (U.S. Nuclear Regulatory Commission). 2013a. "Waste Confidence Generic Environmental Impact Statement Scoping Process Summary Report." Washington, D.C. Accession No. ML13060A128.

NRC (U.S. Nuclear Regulatory Commission). 2013b. "Scoping Comments on the *Waste Confidence Generic Environmental Impact Statement.*" Washington, D.C. Accession No. ML13060A130.

Appendix B

Technical Feasibility of Continued Storage and Repository Availability

Appendix B

Technical Feasibility of Continued Storage and Repository Availability

B.1 Introduction

In this *Generic Environmental Impact Statement for Continued Storage of Spent Nuclear Fuel* (GEIS), the U.S. Nuclear Regulatory Commission (NRC) addresses the environmental impacts of continuing to store spent nuclear fuel (spent fuel) at a reactor site or at an away-from-reactor storage facility, after the end of a reactor's licensed life for operation until final disposition in a geologic repository ("continued storage"). This GEIS provides a regulatory basis for the NRC's proposed amendment to Title 10 of the *Code of Federal Regulations* (CFR) Part 51. Historically, past Waste Confidence proceedings included a Decision with five findings that addressed technical feasibility of a mined geologic repository, the degree of assurance that disposal would be available by a certain time, and the degree of assurance that spent fuel and commercial high-level waste could be managed safely without significant environmental impacts for a certain period beyond the expiration of plants' operating licenses. Preparation of and reliance upon a GEIS is a fundamental departure from the approach used in past Waste Confidence proceedings. This GEIS acknowledges the uncertainties in the Commission's prediction of repository availability and provides an environmental analysis of three possible storage timeframes. To this end the GEIS considers impacts for three possible timeframes constrained by repository availability, including the impacts from indefinite storage, should a repository never become available.

The NRC's underlying conclusions regarding the technical feasibility of continued storage and a repository continue to undergird its environmental analyses. These underlying conclusions, which are relevant to an analysis of the potential environmental impacts assessed in this GEIS, are discussed as two broad issues in this appendix: the NRC's technical information regarding the availability of a repository for disposal of spent fuel generated in a power reactor (Section B.2) and the technical feasibility of safe storage of spent fuel in an at-reactor or away-from-reactor storage facility until sufficient repository capacity becomes available (Section B.3). These two broad issues were addressed in the five findings contained in the Waste Confidence Decision from past Waste Confidence proceedings; this appendix addresses these issues under two broad topic areas rather than five findings. Section B.4 provides a summary of the conclusions reached in this appendix.

B.2 Repository will be Available to Dispose of Spent Fuel

Based on the analysis below and elsewhere in this GEIS, the NRC believes that the most-likely scenario is that a repository will become available to dispose of spent fuel by the end of the short-term timeframe (within 60 years of the end of a reactor's licensed life for operation). The NRC's belief is based on the resolution of two questions: whether a repository is technically feasible and, if so, how long will it take to site, license, construct, and open a repository. "Technical feasibility" simply means whether a geologic repository is technically possible using existing technology (i.e., without any fundamental breakthroughs in science and technology). If technically feasible, then the question becomes what is a reasonable timeframe for the siting, licensing, construction, and opening of a geologic repository. Both questions are discussed in detail below in Sections B.2.1 (Technical Feasibility of a Repository) and B.2.2 (Availability of a Repository).

B.2.1 Technical Feasibility of a Repository

The Commission has consistently determined that current knowledge and technology support the technical feasibility of deep geologic disposal. In its original 1984 Waste Confidence proceeding, the NRC stated that "[t]he Commission finds that safe disposal of [high-level radioactive waste and spent nuclear fuel] is technically *possible* and that it is achievable using *existing* technology" (49 FR 34658) (emphasis added). The Commission then stated: "Although a repository has not yet been constructed and its safety and environmental acceptability demonstrated, no fundamental breakthrough in science or technology is needed to implement a successful waste disposal program." Although the Commission has conducted Waste Confidence proceedings since 1984, this focal point—whether a fundamental breakthrough in science or technology is needed—continues to guide the Commission's consideration of the feasibility of spent fuel disposal. Since 1984, the technical feasibility of a geological repository has moved significantly beyond a theoretical concept.

Today, the consensus within the scientific and technical community engaged in nuclear waste management is that safe geologic disposal is achievable with currently available technology (see, e.g., Blue Ribbon Commission on America's Nuclear Future [BRC 2012], Section 4.3). Currently, 25 countries, including the United States, are considering disposal of spent or reprocessed nuclear fuel in deep geologic repositories. Repository programs in other countries, which continue to provide additional information useful to the U.S. program, are actively considering crystalline rock, clay, and salt formations as repository host media (IAEA 2005). Many of these programs have researched these geologic media for several decades.

Ongoing research in both the United States and other countries supports a conclusion that geological disposal remains technically feasible and that acceptable sites can be identified. After decades of research into various geological media, no insurmountable technical or scientific problem has emerged to challenge the conclusion that safe disposal of spent fuel and

high-level radioactive waste can be achieved in a mined geologic repository. Over the past two decades, significant progress has been made in the scientific understanding and technological development needed for geologic disposal. There is now a better understanding of the processes that affect the ability of repositories to isolate waste over long periods (e.g., the International Atomic Energy Agency's [IAEA's] *Scientific and Technical Basis for the Geologic Disposal of Radioactive Wastes, Technical Reports Series No. 413* [IAEA 2003a] and Ahn and Apted's *Geological Repository Systems for Safe Disposal of Spent Nuclear Fuels and Radioactive Wastes* [Ahn and Apted 2010]).

Further, the ability to characterize and quantitatively assess the capabilities of geologic and engineered barriers has been repeatedly demonstrated (see the Organisation for Economic Cooperation and Development, Nuclear Energy Agency's *Lessons Learnt from Ten Performance Assessment Studies* [NEA 1997]). In addition, specific sites have been investigated and extensive experience has been gained in underground engineering (see IAEA's *Radioactive Waste Management Studies and Trends, IAEA/WMDB/ST/4* [IAEA 2005] and *The Use of Scientific and Technical Results from Underground Research Laboratory Investigations for the Geologic Disposal of Radioactive Waste* [IAEA 2001]). These advances and others throughout the world (e.g., IAEA's *Joint Convention on Safety of Spent Fuel Management and on Safety of Radioactive Waste Management, INFCIRC/546* [IAEA 1997]) continue to confirm the soundness of the basic concept of deep geologic disposal (IAEA 1997). In the United States, the technical approach for safe high-level radioactive waste disposal has remained unchanged for several decades—a deep geologic repository containing natural barriers to hold canisters of high-level radioactive waste with additional engineered barriers to further retard radionuclide release. Although some elements of this technical approach have changed in response to new knowledge, safe disposal remains feasible with current technology. The recent report by the Blue Ribbon Commission on America's Nuclear Future (BRC 2012) supported geologic disposal by concluding that:

> geologic disposal in a mined repository is the most promising and technically accepted option available for safely isolating high-level nuclear wastes for very long periods of time. This view is supported by decades of expert judgment and by a broad international consensus. All other countries with spent fuel and high-level waste disposal programs are pursuing geologic disposal. The United States has many geologic media that are technically suitable for a repository.

In addition, support for the feasibility of geologic disposal can be drawn from experience gained from the review of the U.S. Department of Energy's (DOE's) license application for a high-level nuclear waste repository at Yucca Mountain, Nevada (DOE 2008a). On June 3, 2008, the DOE submitted an application for a construction authorization to the NRC, and on September 8, 2008, the NRC notified DOE that it found the application acceptable for docketing (73 FR 53284) and began its review. DOE subsequently filed a motion with an NRC Atomic Safety and Licensing Board seeking permission to withdraw the license application

(NRC 2010a). In recognition of budgetary limitations, the Commission directed the Atomic Safety and Licensing Board to complete all necessary and appropriate case management activities, and the Atomic Safety and Licensing Board suspended the proceeding. The NRC staff completed three technical review documents (i.e., NRC 2011a,b,c) covering the operational period and the postclosure period (i.e., the period after permanent closure of the repository) and one safety evaluation report on general information (NRC 2010b). The NRC staff's technical review did not identify any issues that would challenge the feasibility of geological disposal as a general matter. However, these technical reports did not include conclusions as to whether or not DOE's proposed Yucca Mountain repository satisfies the Commission's regulations and do not constitute a final judgment or determination of the acceptability of the DOE construction application.

In August 2013, the U.S. Court of Appeals for the District of Columbia Circuit (Court of Appeals) issued a writ of mandamus and directed the NRC to resume the licensing process for DOE's license application. In response, the Commission directed the NRC staff to complete and issue the safety evaluation report associated with the license application (NRC 2013). Currently, the NRC is working on completing its safety review of DOE's license application and plans to publish the remaining volumes of its safety evaluation report by January 2015.

The technical feasibility of a deep geologic repository is further supported by current DOE defense-related activities. The DOE sited and constructed, and since March 1999 has been operating, a deep geologic repository for defense-related transuranic radioactive wastes near Carlsbad, New Mexico. At this site, the DOE has successfully disposed of transuranic waste from nuclear weapons research and testing operations. This Waste Isolation Pilot Plant (WIPP) is located in the Chihuahauan Desert of southeastern New Mexico, approximately 42 km (26 mi) east of Carlsbad. The facility is used to store transuranic waste from nuclear weapons research and testing operations from past defense activities. Project facilities include mined disposal rooms 655 m (2,150 ft) underground.

The NRC recognizes the incident at WIPP on February 14, 2014, which resulted in the release of americium and plutonium from one or more transuranic (TRU) waste containers into the environment. Trace amounts of americium and plutonium are believed to have leaked through unfiltered exhaust ducts and escaped aboveground. No personnel were determined to have received external contamination; however, 21 individuals were identified through bioassay to have initially tested positive for low level amounts of internal contamination. No adverse health impacts have been reported. The DOE has issued a Phase 1 accident report on the incident (DOE 2014). Despite the event, the NRC continues to conclude that a repository is technically feasible.

In January 2013, the DOE released *Strategy for the Management and Disposal of Used Nuclear Fuel and High-Level Radioactive Waste*, a response to the Blue Ribbon Commission on America's Nuclear Future's report (DOE 2013). In this strategy document, DOE presents a

framework for "moving toward a sustainable program to deploy an integrated system capable of transporting, storing, and disposing of [spent] nuclear fuel and high-level radioactive waste from civilian nuclear power generation…" (DOE 2013). This new DOE strategy includes a nuclear waste-management system consisting of a pilot interim storage facility, a larger full-scale interim storage facility, and a geologic repository. U.S. policy remains that geologic disposal is the appropriate long-term solution for disposition of spent fuel and high-level radioactive waste.

Finally, the activities of European countries support the technical feasibility of a deep geologic repository. In late 2012, a Finnish nuclear-waste-management company (Posiva) submitted a construction license application for a geological repository for spent fuel to Finland's Radiation and Nuclear Safety Authority, and in spring 2011, Swedish nuclear authorities accepted an application from the Swedish Nuclear Fuel and Waste Management Company for permission to build a repository for spent fuel. Based on the national and international research, proposals, and experience with geologic disposal, the NRC concludes that a geologic repository continues to be technically feasible.

B.2.2 Availability of a Repository

Given the consensus that geologic repositories are technically feasible, experience to date is also relevant in determining the timeframe to successfully site, license, construct, and open a repository. Of the 24 countries other than the United States considering disposal of spent or reprocessed nuclear fuel in deep geologic repositories, 10 have established target dates for the availability of a repository.[1] The majority of the 14 countries with no established target date for repository availability rely on centralized interim storage, which may include a protracted period of at-reactor storage before shipment to a centralized facility.

While some countries have struggled with specific implementation issues, the international consensus regarding an approach to disposal in a deep geologic repository and a reasonable timeframe for a repository to become available has not been abandoned.

In 1997, the United Kingdom rejected an application for the construction of a rock characterization facility at Sellafield, leaving the country without a path forward for long-term management or disposal of intermediate-level waste or spent fuel. In 1998, an inquiry by the United Kingdom House of Lords endorsed geologic disposal but specified that public acceptance was required. As a result, the United Kingdom Government embraced a repository plan based on the principles of voluntarism and partnership between communities and

[1] The three countries with target dates that plan direct disposal of spent fuel are: Czech Republic (2050), Finland (2020), and Sweden (2025). The seven countries with target dates for disposal of reprocessed spent fuel and high-level radioactive waste are: Belgium (2035), China (2050), France (2025), Germany (2025), Japan (2030s), Netherlands (2103), and Switzerland (2042).

implementers. This led to the initiation of a national public consultation and major structural reorganization within the United Kingdom program. In 2008, the UK Government called for potential volunteers to host the repository and was expecting the repository would open around 2040 (MRWS 2012). In 2013, the Cumbria County Council voted to withdraw from the United Kingdom process to find a host community for an underground radioactive waste disposal facility and to end the site-selection process in West Cumbria. In responding to the outcome of the votes in West Cumbria, the Secretary of State for Energy and Climate Change published a Written Ministerial Statement on January 31, 2013, that made clear that the United Kingdom Government remains committed to geological disposal for the safe and secure management of higher activity radioactive waste (DECC 2013) . In July 2014, the United Kingdom continued to support geological disposal and provided a revised policy framework for implementing geological disposal that favors a voluntarist approach based on working with communities that are willing to participate in the siting process (DECC 2014). The formal process for working with communities is expected to begin in 2016.

In Germany, a large salt dome at Gorleben had been under study since 1977 as a potential spent fuel repository. After suspension of exploration in 2000, Germany resumed exploration of Gorleben as a potential spent fuel repository in 2010. In July 2013, the Site Selection Act became effective in Germany. Currently, a 33-member commission made up of representatives from societal groups, academia, and the German government is preparing proposals for site selection procedures, which are due by the end of 2015.

Initial efforts in France during the 1980s also failed to identify potential repository sites, using solely technical criteria. Failure of these attempts led to the passage of nuclear waste legislation that prescribed 15 years of research. Reports on generic disposal options in clay and granite media were prepared and reviewed by the French Nuclear Safety Authority in 2005. In 2006, the French Parliament passed new legislation designating a single site for deep geologic disposal of intermediate- and high-level radioactive waste. This facility, to be located near the town of Bure in northeastern France, is scheduled to open in 2025, about 34 years after passage of the original Nuclear Waste Law of 1991, and 19 years after site selection. On May 6, 2014, the French National Agency for Radioactive Waste Management (ANDRA) announced the actions it intends to take resulting from recent public debate on geological disposal. ANDRA announced plans for a pilot facility and improvements for greater public involvement. ANDRA anticipates completion of the license application at the end of 2017 and, subject to approvals, construction of the facility could begin in 2020 and a pilot phase could begin in 2025.

In Switzerland, after detailed site investigations in several locations, the Swiss National Cooperative for Radioactive Waste Disposal proposed, in 1993, a deep geologic repository for low- and intermediate-level waste at Wellenberg. In 1998, Swiss authorities found that technical feasibility of the disposal concept had been successfully demonstrated; however, in 2002, a public cantonal referendum rejected the proposed repository. Despite difficulties with public acceptance, Swiss authorities have gathered more than 25 years of high-quality field and

laboratory research and are anticipating constructing and operating a deep geologic repository after 2040, less than 30 years from today. A site selection plan was approved by the Federal Council in 2008 and three geological siting areas were identified by 2011 for deep geological disposal of high-level waste. A second phase is currently underway and involves regional participation and comparative studies with safety as the decision criterion.

In 1998, an independent panel reported to the Governments of Canada and Ontario on its review of Atomic Energy of Canada Ltd.'s concept of geologic disposal (CEAA 1998). The panel concluded that broad public support is necessary in Canada to ensure the acceptability of a concept for managing spent fuel. The panel also found that technical safety is a key part, but only one part, of acceptability. To be considered acceptable in Canada, the panel found that a concept for managing nuclear fuel wastes must (1) have broad public support; (2) be safe from a technical perspective; (3) have been developed within a sound ethical and social assessment framework; (4) have the support of Aboriginal people; (5) be selected after comparison with the risks, costs, and benefits of other options; and (6) be advanced by a stable and trustworthy proponent and overseen by a trustworthy regulator. Resulting legislation mandated a nationwide consultation process and widespread organizational reform.

In 2007, the Government of Canada announced its selection of the Adaptive Phased Management approach and directed the Nuclear Waste Management Organization to take at least 2 years to develop a "collaborative community-driven site-selection process." The Nuclear Waste Management Organization is using this process to open consultations with citizens, communities, Aboriginals, and other interested parties to find a suitable site in a willing host community. Nuclear Waste Management Organization's site-selection process was initiated in May 2010. For financial planning and cost estimation purposes only, the Nuclear Waste Management Organization assumes the availability of a deep geological repository in 2035, 27 years after initiating development of new site-selection criteria, 30 years after embarking on a national public consultation, and 37 years after rejection of the original geologic disposal concept (NWMO 2008). At the end of 2012, 21 communities had expressed interest in learning more about the project (NWMO 2013). As of June 2014, 14 of the initial 21 communities are still actively engaged in the siting process. In particular, four communities are continuing with more detailed analyses having completed preliminary assessments; 10 communities are still in the preliminary assessment phase; and seven communities are no longer being considered in the site selection process.

Repository development programs in Finland and Sweden are further along than in other countries but have taken time to build support from potential host communities. In Finland, preliminary site investigations started in 1986, and detailed characterizations of four locations were performed between 1993 and 2000. In 2001, the Finnish Parliament ratified the government's decision to proceed with a repository project at a chosen site only after the 1999 approval by the municipal council of the host community. In December 2012, Posiva (i.e., the nuclear-waste-management company in Finland) submitted a construction permit application for

a final repository that will hold spent fuel from Finland's nuclear reactors. In June 2014, the Radiation and Nuclear Safety Authority (STUK) in Finland estimated that it can complete its safety assessment report for the construction permit application in January 2015. Finland expects this facility to begin receipt of spent fuel for disposal in 2020, 34 years after the start of preliminary site investigations.

Between 1993 and 2000, Sweden conducted feasibility studies in eight municipalities. One site was found technically unsuitable, and two sites were eliminated by municipal referenda. Three of the remaining five sites were selected for detailed site investigations. Municipalities adjacent to two of these sites agreed to be potential hosts, and one refused. Since 2007, detailed site investigations were conducted at Östhammar and Oskarshamn, both of which already host nuclear power stations. On June 3, 2009, the Swedish Nuclear Fuel and Waste Management Company (SKB) selected the Forsmark site located in the Östhammar municipality for the Swedish spent fuel repository and, in spring 2011, SKB submitted a license application. At the request of the Swedish government, the Nuclear Energy Agency organized an international team to review the SKB license application. In June 2012, the international review team completed its review and report stating: "SKB's post-closure radiological safety analysis report, SR-Site, is sufficient and credible for the licensing decision at hand. SKB's spent fuel disposal programme is a mature programme—at the same time innovative and implementing best practice—capable in principle to fulfil the industrial and safety-related requirements that will be relevant for the next licensing steps" (NEA 2012). In April 2014, the Swedish Radiation Safety Authority, as part of its review process, circulated the license application for comment to other public authorities and environmental organizations. A government decision is expected in 2015. If Swedish authorities authorize construction, the repository could be available for disposal around 2025, about 30 years after feasibility studies began.

In the United States, the DOE is the agency responsible for carrying out the national policy to site and build a repository, which includes designing, constructing, operating, and decommissioning the repository. The time DOE will need to develop a repository site will depend upon a variety of factors, including Congressional action and funding. Public acceptance will also influence the time it will take to implement geologic disposal. The NRC, by contrast, is the agency responsible for reviewing, licensing, and overseeing the construction and operation of the repository.

In 2012, the Blue Ribbon Commission on America's Nuclear Future recommended "prompt efforts to develop one or more geologic disposal facilities" (BRC 2012). In response to the Blue Ribbon Commission's report, the DOE (2013) stated that its "…goal is to have a repository sited by 2026; the site characterized, and the repository designed and licensed by 2042; and the repository constructed and its operations started by 2048." Based on the evaluation of international experience with geologic repository programs—including the issues some countries have overcome—and the affirmation by the Blue Ribbon Commission of the geologic repository approach, the NRC continues to believe that 25 to 35 years is a reasonable period for

repository development (i.e., candidate site selection and characterization, final site selection, licensing review, and initial construction for acceptance of waste).

Although the NRC believes that 25 to 35 years is a reasonable timeframe for repository development, it acknowledges that there is sufficient uncertainty in this estimate that the possibility that more time will be needed cannot be ruled out. International and domestic experience have made it clear that technical knowledge and experience alone are not sufficient to bring about the broad social and political acceptance needed to construct a repository. The time needed to develop a societal and political consensus for a repository could add to the time to site and license a repository or overlap it to some degree.

Because the availability of a repository can be substantially affected by whatever process is employed to achieve a national consensus on repository site selection, and consistent with the decision of the Court of Appeals in *New York v. NRC*, this GEIS offers three timeframes for continued storage that reflect significant differences in the availability of the repository. The short-term timeframe assumes a repository is available 60 years after the end of a reactor's licensed life for operation. The long-term timeframe assumes a repository is not available for an additional 100 years beyond the short-term timeframe, which means a repository would be available 160 years after the end of a reactor's licensed life for operation. In recognition of the uncertainty in reaching a national consensus on repository site selection, the third timeframe assumes that a repository does not become available and the spent fuel continues to be stored indefinitely.

In the 2010 Waste Confidence decision, the Commission assessed the length of time that would be needed to site, license, construct, and open a repository. This analysis moved away from the Commission's historical practice of specifying a "target date" and instead concluded that a repository would be available "when necessary." The Commission's reluctance to select a target date was not indicative of an inability to predict the length of the process for siting, constructing, licensing, and opening a repository, but rather that identification of a specific year as a starting point was uncertain. In sum, based on experience in licensing similarly complex facilities in the United States and national and international experience with repositories already in progress, the NRC concludes a reasonable period of time for the development of a repository is approximately 25 to 35 years.

B.3 Technical Feasibility of Safe Storage

Spent fuel removed from a reactor is initially placed in a spent fuel pool for cooling. After several years (about 5 years for low-burnup fuel and up to 20 years for high-burnup fuel), the spent fuel is sufficiently cooled that it can be placed in dry cask storage assuming current

storage configurations and heat loads.[2] After the end of a reactor's licensed life for operations, spent fuel is stored in onsite spent fuel pools or in an at-reactor or away-from-reactor dry cask storage system.

Continued storage of spent fuel at at-reactor or away-from-reactor sites will be necessary until a repository is available for permanent disposal. The storage of spent fuel in any combination of storage (spent fuel pools or dry casks) will continue as a licensed activity under regulatory controls and oversight. Nonetheless, the conclusions reached by the NRC in this GEIS regarding the technical feasibility of continued storage do not rely solely on NRC's regulatory framework governing these activities. Rather, these conclusions are also based on NRC's experience with the actual storage of spent fuel under this regulatory framework and the continued application of proven fuel storage methodologies. Continued safe storage of spent fuel requires both the technical feasibility of storage methods and a regulatory framework that provides for monitoring and oversight to address the potential for evolving issues. The technical feasibility of wet storage in spent fuel pools and dry casks is discussed separately in Sections B.3.1 and B.3.2. The regulatory framework applicable to both wet and dry storage is discussed in Section B.3.3. The continuation of the institutional controls necessary to maintain safe storage is discussed in Section B.3.4.

B.3.1 Technical Feasibility of Wet Storage

The technical feasibility of continued storage in spent fuel pools is supported by a number of technical considerations. First, the integrity of spent fuel and cladding within the benign environment of the spent fuel pool's controlled water chemistry is supported by operational experience and a number of scientific studies, some of which are summarized below. Further, the spent fuel pool's robust structural design protects against a range of natural and human-induced challenges, which are discussed in detail in the following sections and in the body of the GEIS.

B.3.1.1 Integrity of Spent Fuel and Cladding in Spent Fuel Pools

In 1984, the NRC provided information supporting the low degradation rates of spent fuel in spent fuel pools based on national and international storage experience, which at that time totaled 18 years of experience with zirconium-clad fuel[3] and 12 years of experience with stainless-steel-clad fuel (49 FR 34658). Examples of the cited information are:

[2] Appendix I provides additional information on the characteristics, storage, and transportation of high-burnup uranium oxide (UOX) spent fuel and mixed uranium-plutonium oxide (MOX) spent fuel.
[3] In 1984, only two commercial light water reactor nuclear power plants used stainless-steel-clad fuel, whereas most used zirconium-clad fuel (49 FR 34658).

1. In *Behavior of Spent Nuclear Fuel in Water Pool Storage,* Johnson (1977) reported on corrosion studies of irradiated fuel at 20 reactor pools in the United States, finding no detectable degradation of zirconium cladding.
2. At the American Nuclear Society's Executive Conference on Spent Fuel Policy and its Implications, presented in Buford, Georgia, April 2 to 5, 1978, Johnson (1978) presented "Utility Spent Fuel Storage Experience," which reported that no degradation has been observed in commercial power reactor fuel stored in onsite pools in the United States and that extrapolation of corrosion data suggests that less than a tenth of a percent of the thickness of the zirconium clad would be corroded after 100 years.
3. In *The Long-Term Storage of Irradiated CANDU Fuel Under Water*, Walker (1979) concluded that "50 to 100 years under water should not significantly affect their [spent fuel bundles] integrity."

Almost 30 years of additional experience has been gained since the completion of the first Waste Confidence proceeding in 1984, during which time the technical basis for very slow degradation rates of spent fuel in spent fuel pools has continued to grow and now includes the wet storage of high-burnup fuel. Examples of this additional experience include the following:

1. In *Durability of Spent Nuclear Fuels and Facility Components in Wet Storage*, the IAEA (1998) summarized the durability of materials in wet storage, stating: "The zirconium alloys represent a class of materials that is highly resistant to degradation in wet storage, including some experience in aggressive waters. The only adverse experience involves Zircaloy clad metallic uranium where mechanical damage to the cladding was a prominent factor during reactor discharge, exposing the uranium metal fuel to aqueous corrosion. Otherwise, the database for the zirconium alloys supports a judgment of satisfactory wet storage in the time frame of 50 to 100 years or more."
2. In *Spent Fuel Performance Assessment and Research: Final Report of a Co-Ordinated Research Project on Spent Fuel Performance Assessment and Research (SPAR) 1997–2001*, the IAEA (2003b), while discussing spent fuel storage experience, reported on a detailed review of the degradation mechanisms of spent fuel cladding under wet storage and stated that "wet storage of spent fuel only appears to be limited by adverse pool chemistry or the deterioration of the fuel storage pool structure."
3. In *Understanding and Managing Ageing of Materials in Spent Fuel Storage Facilities*, the IAEA reported that "over more than 40 years of experience with several million LWR [light water reactor] rods, power reactor fuel with zirconium alloy cladding has had an excellent durability in wet storage" (IAEA 2006). The IAEA went on to state that "destructive and non-destructive examinations of fuel rods, visual evidence and coupon studies [IAEA 2006; pp. 11, 13, 54–58] all support resistance to aqueous corrosion. There have been no reports of fission gas evolution, indicative of cladding failure in wet storage. Rod consolidation campaigns have been conducted without any indication of storage-induced degradation.

There is a sufficient database to indicate that wet storage of fuel with zirconium alloy cladding can be extended for at least several decades."

4. In *Impact of High Burnup Uranium Oxide and Mixed Uranium-Plutonium Oxide Water Reactor Fuel on Spent Fuel Management, No. NF-T-3.8*, (IAEA 2011a) the IAEA stated that because wet storage is associated with low temperatures, the clad material property degradation is expected to be low. However, the IAEA also recognized that high-burnup uranium oxide and MOX spent fuel storage in pools will increase the heat load and potentially cause radioactive releases, which may require an upgrade of the pool facility with respect to heat removal, pool cleanup systems, and additional neutron poison material in the pool water or in storage racks. In addition, the IAEA suggested that reevaluation of criticality and regulatory aspects may also be required for high-burnup fuel.

Based on available information and operational experience, degradation of the fuel cladding occurs very slowly over time in the spent fuel pool environment. Degradation of the spent fuel should be minimal over the short-term storage timeframe. The NRC expects that only routine maintenance will be needed over the short-term storage timeframe. However, it is possible that future evaluations and experience with high-burnup fuel could identify upgrades and enhancements to pool storage that would need to be implemented in the future (see discussion on regulatory framework in Section B.3.3). Although the NRC assumes in the GEIS that the spent fuel pool will be decommissioned before the end of the short-term storage timeframe, it is not aware of any information that would call into question the technical feasibility of continued safe storage of spent fuel in spent fuel pools beyond the short-term storage timeframe.

B.3.1.2 Robust Structural Design of Spent Fuel Pools

As described in Section 2.1.2.1 of the GEIS, spent fuel pools are massive, seismically designed structures that are constructed from thick, reinforced concrete walls and slabs that vary between 0.7 and 3 m (2 and 10 ft) thick. All spent fuel pools currently in operation are lined with stainless-steel liners that vary in thickness from 6 to 13 mm (0.25 to 0.5 in.).[4] NUREG–1738 (NRC 2001), *Technical Study of Spent Fuel Pool Accident Risk at Decommissioning Nuclear Power Plants* indicates that spent fuel pool structures are designed to be seismically robust (i.e., it is expected that a seismic event with peak spectral acceleration significantly larger than that of the safe shutdown earthquake would be required to produce catastrophic failure of the structure) (NRC 2001). Further, in evaluating the seismic risk to spent fuel pools, NRC (2001) stated that "[i]n boiling-water reactor (BWR) plants, the pool structures are located in the reactor building at an elevation several stories above the ground. In pressurized-water reactor (PWR)

[4] Dresden Unit 1 and Indian Point Unit 1 have no liner plates, but neither pool is currently operating. Both plants were permanently shut down more than 20 years ago and no safety-significant degradation of their concrete pool structures has been reported. At present, no spent fuel remains in either reactor's spent fuel pool.

plants, the [spent fuel pool] structures are outside the containment structure and supported on the ground or partially embedded in the ground. The location and supporting arrangement of the pool structures affect their capacity to withstand seismic ground motion beyond their design basis. The dimensions of the pool structure are generally derived from radiation shielding considerations rather than seismic demand needs. Spent fuel structures at nuclear power plants are able to withstand loads substantially beyond those for which they were designed." In *Spent Fuel Storage Operation—Lessons Learned* (IAEA 2013), the IAEA reported that pool storage is a mature technology and the latest storage pools have come through an evolutionary process and incorporate the learning from 50+ years of operating experience.

In the initial Waste Confidence proceeding, the Commission found that the risks of major accidents at spent fuel pools resulting in offsite consequences were remote because of the secure and stable character of the spent fuel in the spent fuel pool environment and the absence of reactive phenomena that might result in dispersal of radioactive material. The Commission noted that storage pools and independent spent fuel storage installations (ISFSIs) are designed to safely withstand accidents caused by either natural or man-made phenomena (49 FR 34658). By 1990, the NRC had spent several years studying the potential for a catastrophic loss of reactor spent fuel pool water, which could cause a spent fuel fire in a dry pool. The NRC concluded that, because of the large inherent safety margins in the design and construction of a spent fuel pool, no action was needed to further reduce the risk (55 FR 38472).

On March 11, 2011, an earthquake and subsequent tsunami resulted in significant damage to the nuclear facilities at Fukushima Dai-ichi. Subsequent analysis and inspections performed by Tokyo Electric Power Company personnel determined that the spent fuel pool water levels did not drop below the top of fuel in any spent fuel pool and that no significant fuel damage occurred (INPO 2011). Appendix F contains further discussion of the Fukushima event with respect to spent fuel pools.

The NRC has continued its examination of spent fuel pool storage to ensure that adequate safety is maintained and that there are no adverse environmental effects from the storage of spent fuel in spent fuel pools. The Office of Nuclear Reactor Regulation and the former Office for Analysis and Evaluation of Operational Data independently evaluated the safety of spent fuel pool storage, and the results of these evaluations were documented in a pair of memoranda to the Commission: *Resolution of Spent Fuel Storage Pool Action Plan Issues* (NRC 1996a) and *Assessment of Spent Fuel Pool Cooling* (NRC 1996b) (later published as NUREG–1275, *Vol. 12, "Operating Experience Feedback Report: Assessment of Spent Fuel Cooling*" [NRC 1997a]). As a result of these studies, the NRC and industry identified a number of follow-up activities, which are described by the NRC in a memorandum to the Commission *Follow-up Activities on the Spent Fuel Pool Action Plan* (NRC 1997b). These evaluations subsequently became part of the investigation of Generic Safety Issue 173, *Spent Fuel Pool*

Cooling for Operating Plants, which found that the relative risk posed by loss of spent fuel cooling is low compared with the risk of events not involving the spent fuel pool (NRC 2000).

The safety and environmental effects of spent fuel pool storage were also addressed in conjunction with regulatory assessments of permanently shutdown nuclear plants and decommissioning nuclear power plants. NUREG/CR–6451, *A Safety and Regulatory Assessment of Generic BWR and PWR Permanently Shutdown Nuclear Power Plants* (Travis et al. 1997), addressed the appropriateness of regulations (e.g., requirements for emergency planning and insurance) associated with spent fuel pool storage. The study also provided reasonable bounding estimates for offsite consequences for the most severe accidents, which would involve draining of the spent fuel pool (e.g., complete draining of the spent fuel pool occurs 12 days after shutdown of the reactor).

In 2001, the NRC issued NUREG–1738 (NRC 2001), *Technical Study of Spent Fuel Pool Accident Risk at Decommissioning Nuclear Power Plants*, which found that a postulated accident causing zirconium cladding fires could result in unacceptable offsite doses. Appendix F of this GEIS presents some results from NUREG–1738, including the largest number of early fatalities calculated (191). The large number of calculated fatalities was due, in part, to conservative assumptions for the ruthenium release (i.e., the release fraction is for a volatile fission product in an oxidic [rather than metallic] form), time of the accident (i.e., 30 days after shutdown of the reactor), and late evacuation of the public (i.e., evacuation is started after the release). More realistic assumptions (e.g., low ruthenium release, event occurs one year after shutdown), reduce the largest number of early fatalities from 191 to approximately two (NRC 2001). Although early fatalities are unacceptable, the annual likelihood for such an accident was estimated to be less than three chances in one million (NRC 2001). NUREG–1738 further states that “the risk at decommissioning plants is low and well within the Commission's safety goals. The risk is low because of the very low likelihood of a zirconium fire even though the consequences from a zirconium fire could be serious.” In arriving at this conclusion, NUREG–1738 considered a wide range of initiating events, including but not limited to, events that might lead to rapid loss of pool water (e.g., seismic events, cask drop, aircraft impact, and missiles generated by tornados). The low probability for these varied events to initiate a rapid loss of water from the pool is a direct result of the robustness of the structural design of the spent fuel pool.

As noted, spent fuel pools are massive structures constructed from thick, reinforced concrete walls and slabs designed to be seismically robust. Thus, the likelihood of major accidents at spent fuel pools resulting in offsite consequences is very remote. In particular, Appendix F determines that the environmental impacts from spent fuel pool fires are SMALL during the short-term storage timeframe based on the low risk of a spent fuel pool fire. The NRC is not aware of any additional studies that would cause it to question the low risk of spent fuel pool

accidents and thereby question the technical feasibility of continued safe storage of spent fuel in spent fuel pools for the short-term timeframe considered in the GEIS.

B.3.2 Technical Feasibility of Dry Cask Storage

The technical feasibility of dry cask storage is supported by years of experience and technical studies and NRC reviews that examined and confirmed the integrity of spent fuel and cladding under the controlled and benign environment within dry cask storage systems. The technical feasibility of these systems is further supported by the robustness of the structural design of the dry cask storage system against a variety of natural and human-induced challenges.

B.3.2.1 Low Degradation Rates of Spent Fuel in Dry Cask Storage

In the United States, spent fuel has been safely stored in dry casks for more than 25 years. In 1986, Virginia Power received a license for an at-reactor dry storage facility located at Surry Nuclear Power Plant. As of June 2014, there are operational ISFSIs at 64 sites in the United States. One operational ISFSI, at the GEH-Morris site, is a wet facility. The remaining ISFSIs are storing spent fuel in over 1,900 loaded dry casks. (see Section 2.1.2 in the GEIS for further details). As with wet storage, the overall experience with dry cask storage of similar fuel types, including the cladding, has been similar—slow degradation. In addition, spent fuel is cooled for a lengthy period in a spent fuel pool before being transferred into dry cask storage. NRC guidance regarding dry cask storage recommends a maximum cladding temperature of 400°C (752°F) and a dry, inert atmosphere to reduce the potential for significant degradation (NRC 2010c). Recent studies, including the following, have confirmed dry cask storage reliability:

1. A dry cask storage characterization project (Bare et al. 2001) examined and tested a dry cask storage system, the CASTOR V/21, and found “there was no evidence of cask, shielding, or fuel rod degradation during long-term (14 years) storage that would affect cask performance or fuel integrity.” The project examined zirconium-clad fuel applicable for spent fuel with a burnup of 35 GWd/MTU. A subsequent study (Einziger et al. 2003), which examined spent fuel from the Bare et al. (2001) project, suggests that the spent fuel cladding could remain a viable barrier to fission product release during extended storage up to 100 years in a dry cask environment.
2. The IAEA status report *Understanding and Managing Ageing of Materials in Spent fuel Storage Facilities* (IAEA 2006) stated “[P]ower reactor fuel with zirconium alloy cladding has been placed into dry storage in approximately a dozen countries. The technical basis for satisfactory dry storage of fuel clad with zirconium alloys includes hot cell tests on single rods, whole assembly tests, demonstrations using casks loaded with irradiated fuel assemblies and theoretical analysis.”

3. The Electric Power Research Institute (EPRI 1998) evaluated the data needs for long-term storage and reported that during normal storage of low-burnup spent fuel, "the lower radiation fields and estimated temperatures of 100–125°C after 20 years favor acceptable fuel behavior for extended storage."

The NRC is aware that high-burnup and MOX fuel may be subject to increased degradation of the spent fuel and cladding that could cause further problems with handling, storing, and transporting spent fuel. With this increased usage, research has continued to improve understanding of degradation mechanisms affecting storage of spent fuel. Recent reports (e.g., NRC 2014; Hanson et al. 2012; IAEA 2011a; and Sindelar et al. 2011) have identified a variety of degradation mechanisms and discussed their potential effects on storage. For example, the mechanical integrity of the spent fuel cladding and assembly is important to ensure that handling and transportation of spent fuel can be conducted with relative ease. The mechanical designs of lower-burnup UOX and higher-burnup UOX or MOX fuel are very similar, but some of the after-irradiation properties of higher-burnup UOX and MOX are potentially significant in determining the rate of degradation or differences in performance. Differences in after-irradiation properties between lower-burnup UOX and higher-burnup UOX and MOX include higher fuel rod internal pressures and thinner cladding due to more cladding oxidation and hydride layer buildup causing higher cladding stress, higher decay heat, higher specific activity, and finer grain structure of the fuel pellet, potentially increasing the likelihood and consequences of an accident. Appendix I provides further discussion on the characteristics, storage, and transportation of high-burnup UOX and MOX spent fuel.

Although NRC regulations for dry cask storage allow for a licensing period of up to 40 years for both initial and renewed licenses, licensing periods approved for storage casks for high-burnup fuel have been limited to 20 years due to the more limited data available for high-burnup fuel. These storage times are sufficiently short and the degradation rates of spent fuel sufficiently slow that (1) significant storage, handling, and transportation issues are not expected to arise during a single license period and (2) should information collected during a license period identify any emerging issues and concerns, there would be sufficient time to develop regulatory solutions and incorporate them into future licensing periods.

Ongoing research into the extended storage of spent fuel is part of the NRC's effort to continuously evaluate and update its safety regulations. As part of this effort, the NRC is examining the technical needs and potential changes to the regulatory framework that may be needed to continue licensing of spent fuel storage facilities over periods beyond 120 years. In 2014, the NRC published *Identification and Prioritization of the Technical Information Needs Affecting Potential Regulation of Extended Storage and Transportation of Spent Nuclear Fuel* (NRC 2014). This report considered high-burnup UOX fuel and MOX fuel. Further, international efforts are evaluating degradation mechanisms affecting handling, storage, and transportation of spent fuel (e.g., IAEA 2011a). The NRC, the DOE, other regulators, and the commercial power

industry have formed the Extended Storage Collaboration Program. The goal of this program is to better understand the degradation processes that could impact the storage of spent fuel. As new information becomes available, it will be considered in the development of canister design criteria and aging management requirements for the safe storage of spent fuel. Currently, EPRI is leading a multi-year research project, the majority of which is funded by DOE, to evaluate the safe storage of spent fuel in dry storage casks. EPRI will design and demonstrate dry cask technology at full scale for evaluating the condition of “high-burnup” spent fuel during storage. As research continues, if the NRC were to identify a concern with the safe storage of spent fuel, the NRC would evaluate the issue and take whatever action or make whatever change in its regulatory program necessary to protect public health and safety.

Based on available information and operational experience, degradation of the spent fuel should be minimal over the short-term storage timeframe if conditions inside the canister are appropriately maintained (i.e., consistent with the technical specifications for storage). Thus, the NRC expects that only routine maintenance will be needed over the short-term storage timeframe. Repackaging of spent fuel may be needed if storage continues beyond the short-term storage timeframe. In the GEIS, the NRC assumes that the dry casks would need to be replaced if storage continues beyond the short-term storage timeframe. Accidents associated with repackaging spent fuel are evaluated in Section 4.18 and the environmental impacts are SMALL because the accident consequences would not exceed the NRC accident dose standard contained in 10 CFR 72.106.

Spent fuel transfer operations can present challenges to operators and, in part, because of these challenges, transfer operations are conducted in enclosed, heavily shielded buildings with filters to reduce any potential releases. Although transfer operations at a current reactor would be conducted in the spent fuel pool and the dry transfer system would involve dry transfer, spent fuel transfer operations in either facility would occur within an enclosed, shielded building. Therefore, releases to the environment from handling operations within the spent fuel pool and the dry transfer system are expected to be similar. These operations routinely maintain public and occupational doses well within existing requirements. This is done despite variations in the facilities and equipment and the characteristics of the spent fuel being transferred. While these characteristics may vary, the safety regulations do not. In addition, the NRC requires that facilities and equipment be maintained to ensure safety functions are not compromised. Further, the NRC inspects operating facilities to verify compliance with requirements. As described in Section B.3.3.3 of this appendix, after the end of the reactor’s licensed life for operation, the licensee would continue to store spent fuel onsite under either its 10 CFR Part 72 general license granted to 10 CFR Part 50 or Part 52 reactor licensees or a specific 10 CFR Part 72 license. During this time, the licensee would remain under the NRC’s regulatory control and NRC inspections and oversight of storage facilities would continue. The NRC monitors the performance of ISFSIs (at decommissioned and shutdown reactor sites and at operating reactor sites) by conducting periodic inspections.

The opportunity to inspect spent fuel that has been placed into dry cask storage would occur during repackaging of the fuel. During the short-term timeframe, repackaging would occur, if needed, in the spent fuel pool, which would provide shielding and allow licensees to safely repackage the fuel. In the long-term and indefinite timeframes, repackaging would occur in the dry transfer system, which would be a shielded building. The NRC assumes replacement of dry casks after 100 years of service life; however, replacement times will depend on actual degradation observed during continued regulatory oversight for maintaining safety during continued storage. Studies and experience to date do not preclude a dry cask service life longer than 100 years. In addition, as described in Section 2.2.1.3 of the GEIS, in accordance with 10 CFR 72.42, ISFSI license renewal applications must include, among other things, (1) time-limited aging analyses that demonstrate that structures, systems, and components important to safety will continue to perform their intended safety function for the requested period of extended operation and (2) a description of the aging management program for management of issues associated with aging that could adversely affect structures, systems, and components important to safety. These requirements enhance confidence that spent fuel, including bare fuel, fuel in canisters, or damaged fuel that has been canned and stored in dry casks, could be retrieved for repackaging, if needed. Finally, regulatory experience shows that licensees have successfully dealt with damaged fuel. In the most extreme example, the damaged fuel from the core of Three Mile Island, Unit 2 (TMI-2), was removed and safely placed into storage. If this type of fuel can be successfully moved and managed, then it is reasonable to assume that damaged spent fuel in casks can be handled, if necessary. Although a commercial dry transfer system is currently not operating in the United States, construction and operation of a dry transfer system, including the handling of damaged fuel, can be accomplished with current technology (further information provided in Section 2.2.2.1 – Construction and Operation of a Dry Transfer System).

B.3.2.2 Robust Design of Dry Cask Storage Systems

Dry cask storage systems are passive systems (i.e., relying on natural air circulation for cooling) that are inherently robust, massive, and highly resistant to damage. To date, the NRC and licensee experience with ISFSIs and cask certification indicates that spent fuel can be safely and effectively stored using dry cask storage technology. There have not been any safety issues with dry cask storage.

In addition, the NRC's technical review supporting issuance of Materials License No. SNM–2513 for the Private Fuel Storage, LLC (PFS) facility has confirmed the technical feasibility of continuing storage at an away-from-reactor ISFSI under 10 CFR Part 72 (NRC 2006a). While issues extraneous to safety and protection of the environment have, to date,

prevented the licensee from going forward with the project,[5] the NRC's extensive review of safety and environmental issues associated with construction and operation of the PFS facility provides further information supporting the technical feasibility of safe spent fuel storage at an away-from-reactor ISFSI for long periods following storage at a reactor site (i.e., in a spent fuel pool or at-reactor ISFSI).

The NRC has renewed three specific ISFSI licenses for an extended 40-year period. Because at that time Part 72 only provided for a renewal period of 20 years, an exemption was granted as part of the NRC's review of the safety of renewing Part 72 license for 40 years. The NRC published a final rule on February 16, 2011, to clarify the processes for the renewal of ISFSIs operated under the general license provisions of 10 CFR Part 72, for renewal of the Certificate of Compliance for dry cask storage systems, and for extending the license and renewal terms to 40 years (76 FR 8872). In these cases, the NRC's technical review has encompassed the applicant's evaluation of aging effects on the structures, systems, and components important to safety, supplemented by the applicant's aging management program. These comprehensive reviews support the technical feasibility of continued safe storage of spent fuel in these ISFSIs and thus reaffirm the technical feasibility of safe, interim dry storage for an extended period. While these license renewal cases address storage at an ISFSI for a period of up to 80 years (i.e., up to 40-year initial license, plus 40-year renewal), studies performed to date (e.g., Einziger et al. 2003; EPRI 2002; 55 FR 38472) have not identified any issues that would call into question the technical feasibility of long-term use of dry storage for low-burnup spent fuel.

In 2007, the NRC published a pilot probabilistic risk assessment methodology (NRC 2007) that identified the dominant contributors to risk associated with a welded-canister dry-spent-fuel-storage system at a specific boiling water reactor site. The NRC study developed and assessed a comprehensive list of initiating events, including dropping the cask during handling and external events during onsite storage (e.g., earthquakes, floods, high winds, lightning strikes, accidental aircraft crashes, and pipeline explosions) and reported that the analysis indicates that the overall risk of dry cask storage was found to be extremely low. (The NRC determined that the estimated aggregate risk is an individual probability of a latent cancer fatality of 1.8×10^{-12} during the period encompassing the initial cask loading and first year of service and 3.2×10^{-14} per year during subsequent years of storage [NRC 2007]).

Several characteristics of dry cask storage contribute to the low risk determined by the NRC study. First, these systems are passive. Second, they rely on natural air circulation for cooling.

[5] Although a license was issued, the PFSF has not yet been constructed. However, the NRC determined, based on its review of the application, that there is reasonable assurance that if the PFSF is constructed (1) the activities authorized by the license can be conducted without endangering the health and safety of the public and (2) these activities will be conducted in compliance with the applicable regulations of 10 CFR Part 72 (NRC 2006a).

Third, their inherently robust, massive concrete and steel structure is highly resistant to damage. The robustness of these dry cask storage systems has been tested by significant challenges (e.g., the August 23, 2011 Mineral, Virginia earthquake that affected the North Anna Nuclear power plant and the March 11, 2011 earthquake and subsequent tsunami that damaged the Fukushima Dai-ichi nuclear power plant). Neither event resulted in significant damage to the dry cask storage containers or the release of radionuclides (VEPCO 2011; INPO 2011).[7]

Thus, technical studies and practical operating experience to date confirm the physical integrity of dry cask storage structures and thereby demonstrate the technical feasibility of continued safe storage of spent fuel in dry cask storage systems for the time periods considered in the GEIS. Further, the NRC expects that only routine maintenance will be needed over the short-term storage timeframe. Repackaging of spent fuel may be needed if storage continues beyond the short-term storage timeframe. The NRC is not aware of any issue that would cause it to question the technical feasibility of continued safe storage of spent fuel in dry casks for the timeframes considered in the GEIS. Further, the NRC continues to evaluate aging management programs and to monitor dry cask storage so that it can update its service life assumptions as necessary and consider any circumstances that might require repackaging of spent fuel earlier than anticipated.

B.3.3 Regulatory Oversight of Wet and Dry Spent Fuel Storage

A strong regulatory framework that includes both regulatory oversight and licensee compliance is important to the continued safe storage of spent fuel. As part of its oversight, the NRC can issue orders and new or amended regulations to address emerging issues that could impact the safe storage of spent fuel. This section provides a discussion of how the NRC's regulatory program has addressed potential safety and security concerns and routine operations. The environmental impact analysis in the GEIS relies upon the current regulatory framework, which includes whatever license amendments, orders, and rulemaking becomes necessary to protect public health and safety. These ongoing improvements to the NRC's regulatory structure are reflected in the NRC's upgrade of safety, environmental, and security requirements following historic events, (e.g., the regulatory changes following the TMI-2 accident in 1979; safety and security upgrades following the September 11, 2001 terrorist attacks; and the Task Force recommendations and improvements to safety following the March 11, 2011 earthquake and subsequent tsunami that crippled the Fukushima Dai-ichi nuclear power plant). These regulatory changes demonstrate the NRC's capability for prompt and vigorous response to new developments that warrant increased regulatory attention. Thus, the vitality and evolution of the NRC's regulatory requirements support a reasonable conclusion that continued storage, even

[7] Dry casks at the Fukushima Dai-ichi nuclear power plant are stored in a shared dry cask storage building.

over extended periods of time beyond those regarded as most likely, will continue to be safe with the same or fewer environmental impacts.

B.3.3.1 Regulatory Actions for Routine Operations, Accidents, and Terrorist Activity

As part of its oversight, the NRC can issue orders and new or amended regulations to address emerging issues that could impact the safe storage of spent fuel. An example of the NRC's regulatory oversight is the NRC's actions following the TMI-2 accident in 1979. First, the NRC created a Bulletin and Orders Task Force to assure the immediate safety of all other operating power reactors. Next, the NRC established the TMI-2 Lessons Learned Task Force to identify and evaluate safety concerns requiring prompt licensing actions for operating reactors, beyond the immediate actions announced by the earlier Task Force. A set of short-term recommendations was published as NUREG–0578 in July 1979 (NRC 1979). The NRC then assessed recommendations that "would provide a comprehensive and integrated plan for all actions necessary to correct or improve the regulation and operation of nuclear facilities." This "TMI-2 Action Plan" was published as NUREG–0660 in May 1980 (NRC 1980a). These action items led NRC to issue a list of "Requirements for New Operating Licenses," published in NUREG–0694 (NRC 1980b), which was later clarified and superseded by NUREG–0737 (NRC 1980c). Finally, after issuance of TMI-2 Action Plan requirements, the NRC codified new reactor requirements by regulation (46 FR 26491).

Another example, following the terrorist attacks of September 11, 2001, the NRC undertook an extensive reexamination of spent fuel safety and security issues. In 2002, the NRC issued orders to licensees that required power reactors in decommissioning, spent fuel pools, and ISFSIs to enhance security and improve their capabilities to respond to, and mitigate the consequences of, a terrorist attack. For example, these orders required additional security measures, including increased patrols, augmented security forces and capabilities, and more restrictive site-access controls to reduce the likelihood of a successful terrorist attack. In 2007, the NRC issued a final rule revising the Design Basis Threat,[8] which also increased the security requirements for power reactors and their spent fuel pools (72 FR 12705). More recently, in 2009, the NRC issued a final rule to further improve security measures at nuclear power reactors, including at spent fuel pools (74 FR 13926). This rule included improvements to security measures, such as enhancements to cyber security plans, facilitation of consistent application of preparatory actions with respect to air attacks, integration of the access authorization and security program requirements, and additional requirements for unarmed security personnel to ensure these personnel meet the minimum physical requirements commensurate with their duties.

[8] A design basis threat provides a general description of the attributes of potential adversaries who might attempt to commit radiological sabotage or theft or diversion against which licensee's physical protection systems must defend with high assurance.

Section 4.19 of the GEIS describes the environmental impacts of potential acts of sabotage or terrorism involving the continued storage of spent fuel. This section acknowledges that as the immediate hazard posed by the high radiation levels of spent fuel diminishes over time, depending on burnup, so does the deterrent to handling by unauthorized persons. The NRC will consider this type of information in evaluating whether additional security requirements are warranted in the future.

The most recent examples of the NRC's response to unexpected developments are the additional requirements that the NRC has already imposed or is considering in response to the March 11, 2011 earthquake and subsequent tsunami that resulted in extensive damage to the six-unit Fukushima Dai-ichi nuclear power plant in Japan. On March 12, 2012, the NRC issued multiple orders and a request for information to all of its nuclear power plant licensees (NRC 2012a). The request for information was issued to all licensees to determine whether nuclear plant licenses should be modified, suspended, or revoked. The purpose of the request for information was to re-evaluate seismic and flooding hazards at operating reactor sites and to determine whether appropriate staffing and communication can be relied upon to coordinate event response during a prolonged station blackout event, as was experienced at Fukushima Dai-ichi. Section 4.18 and Appendix F provide further details regarding the NRC's orders and requests for information in response to the Fukushima event.

Another aspect of the NRC's regulatory program for continued storage at reactors and other licensed facilities involves generic communications. Generic communications include, but are not limited to, generic letters, bulletins, information notices, safeguards advisories, and regulatory issue summaries. Generic letters request licensee actions or information to address issues regarding emergent or routine matters of safety, security, safeguards, or environmental significance. Bulletins request licensee actions or information to address significant issues regarding matters of safety, security, safeguards, or environmental significance that have great urgency. Information notices are used to communicate operating or analytical experience to the nuclear industry. The industry is expected to review the information for applicability and consider appropriate actions to avoid similar problems. Regulatory issue summaries are used to communicate and clarify the NRC's technical or policy positions on regulatory matters.

For example, Information Notice 2012–20 (NRC 2012b) informed licensees about the potential for chloride-induced stress corrosion cracking of austenitic stainless steel and maintenance of dry cask storage system canisters. Although an immediate safety concern did not exist, the NRC alerted its licensees and certificate holders that their monitoring programs need to address this concern as part of an aging management program so that appropriate actions (e.g., maintenance) would be taken before there were any impacts.

Another example is Information Notice 2009-26, *Degradation of Neutron-Absorbing Materials in the Spent Fuel Pool*, with respect to criticality safety for pool storage (NRC 2009a). NRC licensees use various methods to meet subcriticality requirements in the spent fuel pool

specified by 10 CFR 50.68 or 10 CFR Part 50 Appendix A, General Design Criterion 62. Most spent fuel pools now store spent fuel assemblies in high-density racks, which incorporate neutron absorber materials into the rack walls. These neutron absorber materials, especially boraflex, can degrade enough to lose their neutron-absorbing capabilities and challenge subcriticality requirements (requirements to prevent an uncontrolled chain reaction). Due to this degradation, many licensees now employ other means to meet subcriticality requirements (e.g., spent fuel loading patterns, fuel burnup credit, control rods or other neutron poisons contained within spent fuel bundles, soluble boron in the pool water, or some combination of these methods). The NRC issued Information Notice 2009-26 to all operating reactors licensees and construction permit holders in October 2009 (NRC 2009a). The NRC continues to monitor how licensees are addressing the degradation issue. Most recently, on March 11, 2014, the NRC issued a draft generic letter for public comment that, if finalized, would request information from licensees to allow the NRC to "determine if the degradation of the neutron-absorbing materials in the SFP is being managed to maintain reasonable assurance that the materials are capable of performing their intended safety function, and if the licensees are incompliance with the regulations" (79 FR 13685).

B.3.3.2 Regulatory Oversight of Spent Fuel Pool Leaks

Spent fuel pool design and operational control requirements in NRC regulations make it unlikely that a leak will remain undetected long enough to result in public health and safety or environmental concerns. Long-standing design requirements include but are not limited to general design criteria in 10 CFR Part 50, Appendix A that focus on fuel storage and handling and radioactivity control (e.g., General Design Criterion 61). Operational controls include requirements for control of effluents and release of radioactive materials such as dose limits found in 10 CFR 20.1301 and design objectives found in 10 CFR Part 50, Appendix I.

There are also requirements that are new or have been updated in response to recent operational experience and related studies by NRC task forces. For example, a 2006 report by NRC's Liquid Radioactive Release Lessons Learned Task Force made 26 specific recommendations for improvements to NRC regulatory programs (NRC 2006b). In 2010, the NRC Groundwater Task Force reevaluated the recommendations of the 2006 Task Force (NRC 2010d). A review of the Groundwater Task Force recommendations by NRC senior management concluded that further action was warranted (NRC 2011d). These studies have influenced specific changes to NRC requirements and guidance. For example:

- In June 2008, the NRC issued Regulatory Guide 4.21, *Minimization of Contamination and Radioactive Waste Generation: Life-Cycle Planning* (NRC 2008). The purpose of this regulatory guide is to present guidance that will assist applicants covered by 10 CFR 20.1406, "Minimization of contamination," in effectively implementing this licensing requirement.

- In June 2009, the NRC issued revision 2 to Regulatory Guide 4.1 (NRC 2009b) provides guidance to licensees for detecting, evaluating, and monitoring releases from operating facilities via unmonitored pathways; to ensure consistency with current industry standards and commercially available radiation detection methodology; to clarify when a licensee's radiological effluent and environmental monitoring programs should be expanded based on data or environmental conditions; and to ensure that leaks and spills are detected before radionuclides migrate offsite via an unmonitored pathway.
- In July 2011, the NRC promulgated its Decommissioning Planning Rule, which added 10 CFR 20.1406(c) and modified 10 CFR 20.1501(a) and (b) (76 FR 35512). This rule requires all licensees to establish operational practices to minimize site contamination and perform reasonable subsurface radiological surveys and sets forth new financial assurance requirements.
- In December 2012, the NRC published Regulatory Guide 4.22, *Decommissioning Planning During Operations*, which provides methods acceptable to the NRC to use in implementing portions of the Decommissioning Planning Rule (NRC 2012c).

Appendix E of the GEIS provides a detailed description and evaluation of the historical data on spent fuel pool leaks, discusses ongoing and future monitoring activities and corrective actions, and analyzes potential environmental impacts that may occur during the short-term timeframe during which spent fuel storage in pools will continue. Appendix E concludes that the potential environmental impacts from spent fuel pool leakage would be SMALL.

B.3.3.3 Dry Cask Storage

Consistent with the NRC's regulatory framework for continued safe spent fuel storage in dry casks, reactor and ISFSI licensees have acted prudently to safely manage their spent fuel. In the late 1970s and early 1980s, the need for alternative storage began to grow as spent fuel pools at many nuclear reactors began to reach their licensed capacity. License amendments to allow spent fuel pool re-racking, fuel-pin consolidation, and specific or general licenses for onsite dry cask storage have been successfully employed to increase onsite storage capacity. As discussed previously, there are currently operational ISFSIs at 64 sites. The NRC is successfully regulating seven fully decommissioned reactor sites that contain ISFSIs licensed under either the general or specific license provisions of 10 CFR Part 72.[11]

After the end of a reactor's licensed life for operation, the licensee would continue to store spent fuel onsite under either the 10 CFR Part 72 general license granted to 10 CFR Part 50 and Part 52 reactor licensees or a specific 10 CFR Part 72 license. During this time, the licensee

[11] These reactor sites include Maine Yankee, Yankee Rowe, Connecticut Yankee (also known as Haddam Neck), Fort St. Vrain, Rancho Seco, Trojan, and Big Rock Point.

would remain under the NRC's regulatory control and NRC inspections and oversight of storage facilities would continue. The NRC monitors the performance of ISFSIs (at both decommissioned and shutdown reactor sites and operating reactor sites) by conducting periodic inspections. When conducting inspections at these ISFSIs, NRC inspectors follow the guidance in NRC Inspection Manual Chapter 2690, *Inspection Program for Dry Storage of Spent Reactor Fuel at Independent Spent Fuel Storage Installations and for 10 CFR Part 71 Transportation Packages* (NRC 2012d).

The current regulatory framework for storage of spent fuel allows for multiple license renewals, subject to aging management analysis and planning. In early 2011, the Commission published a final rule that amended 10 CFR Part 72 to increase the initial and renewal terms for specific ISFSI licenses from "not to exceed 20 years" to "not to exceed 40 years" (76 FR 8872). The Commission concluded that, with appropriate aging management and maintenance programs, license terms not to exceed 40 years are reasonable and adequately protect public health and safety. An applicant for a storage license renewal must provide appropriate technical bases for identifying and addressing aging-related effects and must develop specific aging management plans to justify extended operations of ISFSIs. The regulatory framework for storage is supported by well-developed regulatory guidance; voluntary domestic and international consensus standards; research and analytical studies; and processes for implementing licensing reviews, inspection programs, and enforcement oversight.

B.3.3.4 Summary of Information on Regulatory Oversight

The NRC will continue its regulatory control and oversight of spent fuel storage at both operating and decommissioned reactor sites under both specific and general 10 CFR Part 72 licenses. Decades of operating experience and ongoing NRC inspections demonstrate that these reactor and ISFSI licensees continue to meet their obligation to safely store spent fuel in accordance with the NRC's requirements. If the NRC were to find noncompliance with these requirements or otherwise identify a concern with the safe storage of the spent fuel, the NRC would evaluate the issue and take necessary action or change its regulatory program to protect the public health and safety and the environment.

As noted in the preceding paragraphs, licensees have continued to develop and successfully use onsite spent fuel storage capacity in the form of spent fuel pool and dry cask storage in a safe and environmentally sound fashion. Based on the preceding discussion, the NRC believes that for the storage timeframes considered in the GEIS, regulatory oversight will continue in a manner consistent with NRC's regulatory actions and oversight in place today to provide for continued safe storage of spent fuel as long as spent fuel needs to be stored.

B.3.4 Continued Institutional Controls

As discussed in the previous sections of this appendix, continued safe storage of spent fuel requires both the technical feasibility of safe storage and a regulatory framework that provides for monitoring and oversight to address the potential for evolving issues. To ensure adequate protection of public health and safety, the institutional controls provided by the NRC's regulatory structure and that of sister agencies, as well as by Federal, State and local governments in general, must be maintained over time. The GEIS takes the following approach to institutional controls:

1. the GEIS's evaluation of reasonably foreseeable environmental impacts of continued storage requires an assumption that institutional controls will be maintained;
2. the most reasonably foreseeable assumption is that institutional controls will continue;
3. accidents provide a helpful surrogate for analysis of a temporary lapse in institutional controls, including perspectives on the environmental implications of such a lapse; and
4. although too remote to calculate meaningfully, a permanent loss of institutional controls would likely have catastrophic consequences.

A detailed discussion for each of these topics is provided below.

1. An evaluation of reasonably foreseeable environmental impacts in the GEIS requires an assumption that institutional controls will be maintained

In *New York v. NRC*, the Court of Appeals held that because the NRC had not demonstrated that the unavailability of a repository was "remote and speculative," the National Environmental Policy Act (NEPA) required the NRC to analyze the environmental impacts of continued storage in the absence of a repository. The NRC believes that, if geologic disposal were not possible, national spent fuel policy would change but would not default to relying on the storage facilities as they currently exist—the design of facilities and the regulations governing those facilities would change to accommodate the new policy. Further, the NRC is not in a position to predict how the policy would change or what technical advancements would become available to serve a new national policy if geologic disposal were not feasible or achievable by consensus. Analyzing the consequences of failing to secure a repository requires assumptions about what indefinite continued storage would encompass. Because the current methods of continued storage employ institutional controls, the NRC considered whether it was reasonable to assume that institutional controls would remain in place in the timeframes being considered, and, as explained below, concluded that the assumption is reasonable for the purposes of this GEIS. While the NRC does not believe that the indefinite storage scenario described in the GEIS is likely, the NRC has analyzed this scenario in the GEIS to provide a conservative picture of the environmental impacts should a repository not become available by the end of the long-term timeframe.

As stated in Chapter 1 of this GEIS, the Federal government, by national policy set forth in the Nuclear Waste Policy Act, has assumed responsibility for the permanent disposal of high-level radioactive waste and spent fuel. The Nuclear Waste Policy Act specifies that the cost of both interim storage and permanent disposal is the responsibility of the generators and owners of the waste. Further, the Nuclear Waste Policy Act defines the current national strategy for disposition of spent fuel as disposal in a geologic repository; the geologic repository strategy was recently reaffirmed by the Blue Ribbon Commission on America's Nuclear Future (BRC 2012).

In response to the Blue Ribbon Commission's report (BRC 2012), the DOE expressed its intent to provide a repository by 2048 (DOE 2013), which is about 10 years before the end of the short-term timeframe for the oldest spent fuel storage facility within the scope of this analysis. In this GEIS, the NRC concludes that a repository is most likely to be available by the end of the short-term timeframe, and failing that, likely to be available by the end of the long-term timeframe. In the event a repository could not be sited by the end of the long-term timeframe, the NRC has concluded that it is not reasonable to assume that national policy would default to complete inaction so as to leave spent fuel in dry casks unprotected, much less unattended or ultimately forgotten. However, because an alternate path forward is unknown at this point, the NRC has not attempted to forecast a different solution and assumes that continued storage continues indefinitely.

Should the national policy change from geologic disposal to permanent storage (i.e., onsite or away-from-reactor "disposal" in facilities that resemble ISFSIs), the NRC expects that planning and decision-making for permanent storage of spent fuel would take into account the appropriate balance of engineering design and institutional controls to address the challenges presented by permanent storage. There is no national historic precedent and, more particularly, no regulatory history of nuclear materials to suggest that the Federal government, including the NRC in its assigned role under the Atomic Energy Act, would not engage in planning and decision-making regarding whatever further changes or enhancements would be necessary to accommodate permanent storage, in the unlikely event that option was adopted. Should national policy change to a policy of permanent storage, the NRC believes that significant regulatory changes and design modifications would be required to transfer spent fuel to offsite facilities or convert onsite continued storage facilities to onsite permanent storage facilities. Further, even if a repository does not become available, the NRC believes that, based on the factors discussed in the next section, institutional controls will be maintained as long as the spent fuel needs to be stored.

With respect to costs, the NRC acknowledges that, because of delays in the siting and licensing of a repository, the Federal government bears an increasing share of the financial responsibility for storage costs. Although the annual costs for continued storage are manageable, cumulative costs will continue to increase. The Federal government has estimated it will pay a total of approximately $20 billion in damage awards and settlements by the year 2020 and $500 million

per year after that if DOE does not accept fuel by 2021 and spent fuel continues to accumulate at reactor sites (GAO 2013). Thus, the escalating costs of continued storage provide incentive for the Federal government to implement the national policy for disposal of spent fuel in a deep geologic repository.

The assumption that institutional controls will continue enables an appropriate and reasonable evaluation of the environmental impacts of continued storage over an indefinite timeframe. Absent the stability and predictability that follows from institutional controls, including but not limited to NRC licensing and regulatory controls, few impacts could be reliably forecast. The "hard look" required by NEPA would quickly become unfocused, highly speculative, and ill-defined. Analyzing the impacts that might result from a permanent and total loss of institutional controls would require NRC to reach unsupportable conclusions about how and when our nation, and its government, institutions, and social cohesiveness might degrade or even collapse. Such speculation would preclude meaningful calculations of impacts for the timeframes envisioned in the GEIS.

2. The assumption that institutional controls continue is reasonable

Consistent with NEPA's rule of reason, which provides that agencies conduct an analysis according to the usefulness of the information to the decision-maker and full disclosure to the public of predictable benefits and impacts, this GEIS assumes that institutional controls at any storage site are maintained. This assumption is reasonable for two reasons: First, in any timeframe it would be illogical for any government at any level to abandon the storage facilities, given the particular hazards of the fuel. Continued storage is designed to allow the eventual transport of the spent fuel to a repository, not to permanently sequester the material from the environment without continued active oversight and maintenance. Second, these highly visible storage facilities are much less likely than buried geologic repositories to simply be forgotten.

Spent fuel is highly hazardous, requiring robust containment structures to minimize exposure risks. Spent fuel in storage facilities on the surface of the earth presents a visible hazard that requires active oversight to ensure safety and security measures are maintained and functioning as designed. Storage facilities remain under license and have aging management programs to support their continued maintenance and monitoring. Thus, the visibility of storage facilities and the hazards of spent fuel strongly support the reasonableness of assuming the continuation of institutional controls throughout all of the timeframes analyzed in the GEIS. While changes may occur over time to governments or society, highly visible, hazardous facilities are unlikely to be left abandoned or forgotten. As a result, it is a reasonable assumption that any government would, in the interest of its citizenry, ensure that appropriate oversight (e.g., monitoring, maintenance, and replacement of facilities as needed) remains in place, consistent with radiation protection principles and regulatory restrictions, until final disposition of the spent fuel occurs. Accordingly, the NRC has determined that the assumption of continued institutional controls is reasonable in each of the timeframes considered in the GEIS.

In contrast, consideration of the loss of institutional controls in the context of disposal of spent fuel—as in DOE's Yucca Mountain environmental impact statement (EIS), for example—is not directly applicable to storage: NRC regulations for deep geologic disposal of spent fuel recognize there is a point when the repository ceases operation, is permanently closed, and the license terminated. After permanent closure, regulations specify institutional controls (e.g., the requirements to place markers to identify what is buried deep below the surface of the earth and to maintain records regarding the hazard). However, these institutional controls are part of a defense-in-depth approach to disposal; the facility design is not permitted to rely on those institutional controls to meet postclosure safety requirements.

Additionally, as identified in the public comments for this proceeding (see Appendix D of the GEIS), a repository applicant is required to prepare a stylized calculation to evaluate the consequences should humans inadvertently disrupt the repository (see 10 CFR 63.322). These requirements for disposal address the situation where human activities could occur at a disposal site that is no longer recognizable at the earth's surface following waste burial, permanent closure of the facility, and license termination. However, in contrast to underground disposal facilities, aboveground storage installations are not designed to be abandoned and will remain highly visible on the earth's surface. As explained previously, the visibility and purpose of temporary storage facilities differ significantly from those of permanent disposal facilities, supporting the reasonableness of assuming that institutional controls over continued storage facilities will be maintained.

The NRC recognizes information presented by the National Academies National Research Council and others regarding the durability of institutional controls (e.g., NAS 1995, 2000). The NRC is also aware of international reports that discuss the durability of institutional controls (e.g., NEA 2006, IAEA 2011b). However, this commentary does not conclude that a permanent loss of institutional controls is likely or that effective government and governmental oversight of continued storage will cease in the distant future. Rather, these documents focus on developing plans and strategies regarding what should be done today to address future uncertainty due, in part, to institutional controls.

For example, the Board on Radioactive Waste Management, in its study on long-term institutional management, stated: "No plan developed today is likely to remain protective for the duration of the hazards. Instead, long-term institutional management requires periodic, comprehensive reevaluation of those legacy waste sites still presenting risk to the public and the environment to ensure that they do not fall into neglect and that advantage is taken of new opportunities for their further remediation" (NAS 2000). While regulations may need to be updated over time, the NRC does not view possible future regulatory updates as an impediment to a current understanding of likely environmental impacts of continued storage. Further, future regulatory development would be expected to be undertaken to enhance and improve the effectiveness of regulatory oversight.

3. Accident analysis provides a perspective on the environmental impacts of a temporary lapse of institutional controls

The GEIS considers the environmental impacts of accidents during continued storage (e.g., certain cask drop events) in Section 4.18. These accidents, for the purposes of this NEPA analysis may serve as a surrogate or proxy for the temporary loss of institutional controls, and the impacts of these accidents are representative of impacts from a temporary loss of institutional controls. An accident condition approximates a limited period during which institutional controls are less than effective, after which the NRC expects that institutional controls and oversight would resume. Consequences from accidents resulting in small releases represent a lapse in more routine maintenance tasks, whereas accidents resulting in significant radioactive releases constitute a reasonable surrogate to evaluate consequences that might result from hypothetical acts of radiological sabotage or terrorism in the indefinite timeframe. Consideration of accident consequences thereby provides a reasonable basis for understanding the consequences of continued storage should institutional controls prove temporarily ineffective.

Given the physical characteristics of spent fuel, in most cases, the level of institutional controls necessary for safety would diminish over time and the consequences associated with accidents made possible by lapses in institutional controls would be expected to decrease with the passage of time. The thermal output of spent fuel decreases by approximately a factor of ten in the first 100 years after it is removed from the reactor, which means that maintenance activities and related institutional controls could be adjusted, as appropriate, to account for lower thermal loads. Therefore, the consequences of ineffective institutional controls will diminish over time because lower thermal loads should reduce the need for maintenance activities to maintain safety and lower radioactivity should reduce the consequences of releases of spent fuel. In contrast, institutional controls with respect to security many not diminish. As discussed in Section 4.19.2 of the GEIS, because spent fuel radiation levels will decrease over time, spent fuel could become more susceptible to theft or diversion (i.e., a more attractive target to individuals with malevolent intent). For this reason, additional security requirements may be necessary in the future if spent fuel remains in storage, to ensure that risk posed due to theft or diversion remains very low.

4. Impacts of loss of institutional controls

Some comments recommended that the NRC consider the evaluation of the loss of institutional controls based, in part, on DOE's Yucca Mountain EIS (DOE 2008b), which included an analysis for the loss of institutional controls for storage facilities under the no-action alternative. The NRC notes that DOE's proposed action in that instance was the construction of a repository and that, as a result, analysis of the no-action alternative was required by NEPA. Permanent disposal of spent fuel is a DOE responsibility, and DOE's analysis was designed to evaluate the environmental impacts of not meeting that responsibility. DOE evaluated the storage of the total

volume of high-level waste (i.e., 70,000 MTU) that would be disposed at the repository and, as a means of evaluating what would happen if it took no action, it considered the consequences of a simultaneous loss of institutional controls at 72 commercial and 5 DOE storage sites. In contrast, this GEIS considers the environmental impacts of continued storage at a single generically profiled commercial facility. While the DOE analysis may have sufficed for DOE's Yucca Mountain EIS, the NRC does not believe that the passive scenario assumed as part of the no-action alternative there provides a meaningful method of analyzing the consequences of indefinite storage for purposes of analyzing continued storage in this GEIS.

DOE's analysis evaluates degradation of the storage structures in the absence of human intervention (i.e., that neither government nor local residents, or even malevolent forces, would respond to the degradation in any fashion over a 10,000-year period). DOE did not state that its analysis of the loss of institutional controls represents the reasonably foreseeable impacts of permanent aboveground storage. To the contrary, DOE stated that neither of the no-action scenarios is likely to occur (DOE 2002). However, DOE's Yucca Mountain EIS (DOE 2008b) concluded that the consequences of the potential loss of institutional controls could be "catastrophic" in some resource areas.

As discussed previously, merely assuming loss of institutional controls in the distant, but undefined, future is not enough for the NRC to reasonably foresee when and how the loss of institutional controls might occur, and the consequences of that loss, with the kind of detailed and scientifically supportable analysis of resource impacts that the GEIS provides in every other respect for decision-makers and the public. Rather, the NRC would need to hypothesize the extent to which controls must fail before spent fuel would be effectively abandoned. The difficulty in predicting future consequences is further compounded by the lack of any credible way to foresee the combination of human and natural forces that might act on abandoned storage casks and cause a release. In addition, the baseline human environment becomes increasingly unpredictable the further out in time projections are made.

Nevertheless, the NRC can state broadly that, if institutional controls should be lost through a gradual dissolution of government or an apocalyptic event, unmitigated physical deterioration of spent fuel casks and cladding over decades, if not centuries, would eventually expose radionuclides to the environment. While the consequences—as explained above—are unpredictable, the NRC can state qualitatively that the consequences of such a catastrophe to the environment and public health could be similar to the impacts DOE analyzed for the no-action alternative (scenario 2—permanent loss of institutional controls) in its Yucca Mountain EIS (assuming a similar number of facilities were considered). Thus, in the event of a permanent loss of institutional controls, the resulting consequences to the environment across nearly all resource areas would be clearly noticeable and destabilizing.

B.3.5 Summary of Technical Feasibility of Continued Storage

As discussed previously, the NRC believes that it is reasonable to assume that the storage of spent fuel in any combination of storage in spent fuel pools or dry casks will continue as a licensed activity under regulatory controls and oversight. Licensees have continued to develop and successfully use onsite spent fuel storage capacity in the form of spent fuel pool and dry cask storage in a safe and environmentally sound fashion. Technical understanding and operational experience continues to support the technical feasibility of safe storage of spent fuel in spent fuel pools and in dry casks over long periods of time (e.g., slow degradation of spent fuel during storage in spent fuel pools and dry casks; engineered features of storage pools and dry casks to safely withstand accidents caused by either natural or man-made phenomena). In addition, regulatory oversight has been shown to enhance safety designs and operations as concerns and information evolve over time (e.g., safety enhancements made after the Three Mile Island accident in 1979, the September 11, 2001 terrorist attacks, and the March 11, 2011 Fukushima Dai-ichi disaster.

Based on the technical information and the national and international experience with wet and dry storage of spent fuel, the NRC concludes it is technically feasible to safely store spent fuel in either wet or dry storage for the short-term storage timeframe with only routine maintenance (i.e., no large-scale replacement of spent fuel pools or dry cask storage systems).

In the GEIS, the NRC assumes that after the short-term storage timeframe, spent fuel is stored in dry casks. Further, as discussed previously, the NRC concludes that there is no technical reason that spent fuel cannot be safely stored in dry casks beyond the short-term storage timeframe. As discussed in this appendix, the degradation rates of spent fuel are low under dry storage conditions and the probability of accidents with large consequences are very low. Storage of spent fuel beyond the short-term storage timeframe would continue under an approved aging management program to ensure that monitoring and maintenance are adequately performed. Repackaging of spent fuel may be needed if storage continues beyond the short-term storage timeframe. In the GEIS, the NRC assumes the replacement of dry casks after 100 years of service life; however, actual replacement times will depend on actual degradation observed during continued regulatory oversight for maintaining safety during continued storage. Studies and experience to date do not preclude a dry cask service life longer than 100 years. Accidents associated with repackaging spent fuel are evaluated in Section 4.18 and the environmental impacts are SMALL because the accident consequences would not exceed the NRC accident dose standard contained in 10 CFR 72.106. The NRC concludes it is technically feasible to continue to store spent fuel beyond the short-term storage timeframe, which may include activities to repackage spent fuel.

Section 4.19 of the GEIS describes the environmental impacts of potential acts of sabotage or terrorism involving the continued storage of spent fuel. This section acknowledges that as the immediate hazard posed by the high radiation levels of spent fuel diminishes over time so does

the deterrent to handling by unauthorized persons. The Blue Ribbon Commission's report noted that "over long time periods (perhaps a century or more, depending on burnup and the level of radiation that is deemed to provide adequate self-protection), the fuel could become more susceptible to possible theft or diversion (although other safeguards would remain in place). This in turn could require changes to the security requirements for older spent fuel. Extending storage to timeframes of more than a century could thus require increasingly demanding and expensive security protections at storage sites." If necessary, the NRC will issue orders or enhance its regulatory requirements for ISFSI security, as appropriate, to provide adequate protection of public health and safety and the common defense and security.

B.4 Conclusions

This appendix evaluates the technical feasibility of continued storage and repository availability, including national and international experience with storage and disposal of spent fuel. Based on the information and experience presented in this appendix, the NRC concludes that (1) a geologic repository is technically feasible; (2) the time period needed to develop a repository is approximately 25 to 35 years; (3) continued safe storage of spent fuel in spent fuel pools for the short-term timeframe is technically feasible; and (4) continued safe storage of spent fuel in dry casks for the timeframes considered in the GEIS is technically feasible. Further, the NRC concludes that a strong regulatory framework including both regulatory oversight and licensee compliance is important to the continued safe storage of spent fuel. As discussed in this appendix, the regulatory framework for storage is supported by well-developed regulatory guidance; voluntary domestic and international consensus standards; research and analytical studies; and processes for implementing licensing reviews, inspection programs, and enforcement oversight.

References

10 CFR Part 20. *Code of Federal Regulations*, Title 10, *Energy,* Part 20, "Standards for Protection against Radiation." Washington, D.C.

10 CFR Part 50. *Code of Federal Regulations*, Title 10, *Energy,* Part 50, "Domestic Licensing of Production and Utilization Facilities." Washington, D.C.

10 CFR Part 51. *Code of Federal Regulations*, Title 10, *Energy,* Part 51, "Environmental Protection Regulations for Domestic Licensing and Related Regulatory Functions." Washington, D.C.

10 CFR Part 52. *Code of Federal Regulations*, Title 10, *Energy,* Part 52, "Licenses, Certifications, and Approvals for Nuclear Power Plants." Washington, D.C.

10 CFR Part 63. *Code of Federal Regulations*, Title 10, *Energy*, Part 63, "Disposal of High-Level Radioactive Wastes in a Geologic Repository at Yucca Mountain, Nevada." Washington, D.C.

10 CFR Part 71. *Code of Federal Regulations*, Title 10, *Energy*, Part 71, "Packaging and Transportation of Radioactive Material." Washington, D.C.

10 CFR Part 72. *Code of Federal Regulations*, Title 10, *Energy*, Part 72, "Licensing Requirements for the Independent Storage of Spent Nuclear Fuel, High-Level Radioactive Waste, and Reactor-Related Greater than Class C Waste." Washington, D.C.

46 FR 26491. May 13, 1981. "Licensing Requirements for Pending Operating License Applications: Proposed Rule." *Federal Register*, U.S. Nuclear Regulatory Commission, Washington, D.C.

49 FR 34658. August 31, 1984. "Waste Confidence Decision and Requirements for Licensee Actions Regarding the Disposition of Spent Fuel Upon Expiration of Reactor Operating Licenses; Final Rules." *Federal Register*, U.S. Nuclear Regulatory Commission, Washington, D.C.

55 FR 38472. September 18, 1990. "Consideration of Environmental Impacts of Temporary Storage of Spent Fuel After Cessation of Reactor Operation; and Waste Confidence Decision Review; Final Rules." *Federal Register,* U.S. Nuclear Regulatory Commission, Washington, D.C.

72 FR 12705. March 19, 2007. "Design Basis Threat." *Federal Register,* U.S. Nuclear Regulatory Commission, Washington, D.C.

73 FR 53284. September 15, 2008. "Department of Energy; Notice of Acceptance for Docketing of a License Application for Authority To Construct a Geologic Repository at a Geologic Repository Operations Area at Yucca Mountain, NV." *Federal Register,* U.S. Nuclear Regulatory Commission, Washington, D.C.

74 FR 13926. March 27, 2009. "Power Reactor Security Requirements; Supplemental Proposed Rule." *Federal Register,* U.S. Nuclear Regulatory Commission, Washington, D.C. Accession No. ML080570264.

76 FR 8872. February 16, 2011. "License and Certificate of Compliance Terms." *Federal Register,* U.S. Nuclear Regulatory Commission, Washington, D.C.

76 FR 35512. June 17, 2011. "Decommissioning Planning." *Federal Register,* U.S. Nuclear Regulatory Commission, Washington, D.C.

79 FR 13685. March 11, 2014. "Monitoring of Neutron-Absorbing Materials in Spent Fuel Pools." *Federal Register,* U.S. Nuclear Regulatory Commission, Washington, D.C.

Ahn, J. and M.J. Apted, eds. 2010. *Geological Repository Systems for Safe Disposal of Spent Nuclear Fuels and Radioactive Wastes*. Woodhead Publishing Series in Energy, Number 9, Oxford, England.

Atomic Energy Act of 1954, as amended. 42 USC 2011 *et seq.*

Bare, W.C. and L.D. Torgerson. 2001. *Dry Cask Storage Characterization Project-Phase 1: CASTOR V/21 Cask Opening and Examination*. NUREG/CR–6745, Idaho National Engineering and Environmental Laboratory, Idaho Falls, Idaho. Accession No. ML013020363.

BRC (Blue Ribbon Commission on America's Nuclear Future). 2012. "Report to the Secretary of Energy." U.S. Department of Energy, Washington, D.C. Accession No. ML120970375.

CEAA (Canadian Environmental Assessment Agency). 1998. *Report of the Nuclear Fuel Waste Management and Disposal Concept Environmental Assessment Panel*. Canadian Nuclear Fuel Waste Disposal Concept Environmental Assessment Panel, Quebec, Canada. Available at http://www.ceaa-acee.gc.ca/default.asp?lang=En&n=0B83BD43-1.

DECC (United Kingdom Department of Energy and Climate Change). 2013. "Managing Radioactive Waste Safely: Implementing Geological Disposal Annual Report April 2012–March 2013." URN 13D/152, London, United Kingdom. Available at: https://www.gov.uk/government/uploads/system/uploads/attachment_data/file/210928/MRWS_3rd_Annual_Report.pdf.

DECC (United Kingdom Department of Energy and Climate Change). 2014. "Implementing Geological Disposal." URN 14D/235, London, United Kingdom. Available at https://www.gov.uk/government/uploads/system/uploads/attachment_data/file/332890/GDF_White_Paper_FINAL.pdf.

DOE (U.S. Department of Energy). 2002. *Final Environmental Impact Statement for a Geologic Repository for the Disposal of Spent Nuclear Fuel and High-Level Radioactive Waste at Yucca Mountain, Nye County, Nevada*. DOE EIS–0250F, Office of Civilian Radioactive Waste Management, Las Vegas, Nevada. Accession No. ML032690321.

DOE (U.S. Department of Energy). 2008a. *Yucca Mountain Repository License Application*. DOE/RW–0573, Revision 0, Washington, D.C. Accession No. ML081560400.

DOE (U.S. Department of Energy). 2008b. *Final Supplemental Environmental Impact Statement for a Geologic Repository for the Disposal of Spent Nuclear Fuel and High-Level*

Radioactive Waste at Yucca Mountain, Nye County, Nevada. DOE EIS–0250F–S1, Office of Civilian Radioactive Waste Management, Las Vegas, Nevada. Accession No. ML081750212.

DOE (U.S. Department of Energy). 2013. *Strategy for the Management and Disposal of Used Nuclear Fuel and High-Level Radioactive Waste*. Washington, D.C. Accession No. ML13011A138.

DOE (U.S. Department of Energy). 2014. *Accident Investigation Report, Phase I – Radiological Release Event at the Waste Isolation Pilot Plant on February 14, 2014.* Washington, D.C. Available at http://www.wipp.energy.gov/Special/AIB_Final_WIPP_Rad_Release_Phase1_04_22_2014.pdf.

Einziger, R.E., H. Tsai, M.C. Billone, and B.A. Hilton. 2003. *Examination of Spent PWR Fuel Rods after 15 Years in Dry Storage*. NUREG/CR–6831, Argonne National Laboratory, Argonne, Illinois. Accession No. ML032731021.

EPRI (Electric Power Research Institute). 1998. *Data Needs for Long-Term Dry Storage of LWR Fuel*. Report TR–108757, Palo Alto, California. Available at http://www.epri.com/search/Pages/results.aspx?k=Data%20Needs%20for%20Long-Term%20Dry%20Storage%20of%20LWR%20Fuel.

EPRI (Electric Power Research Institute). 2002. *Technical Bases for Extended Dry Storage of Spent Nuclear Fuel*. Report 1003416, Palo Alto, California. Available at http://cybercemetery.unt.edu/archive/brc/20120621083703/http://brc.gov/sites/default/files/documents/1003416.pdf.

GAO (U.S. Government Accountability Office). 2013. *Commercial Spent Fuel: Observations on the Key Attributes and Challenges of Storage and Disposal Options*. GAO–13-532T, Washington, D.C. Available at http://www.gao.gov/products/GAO-13-532T.

Hanson, B., H. Alsaed, C. Stockman, D. Enos, R. Meyer, and K. Sorenson. 2012. *Gap Analysis to Support Extended Storage of Used Nuclear Fuel Rev. 0*. U.S. Department of Energy Report No. FCRD-USED-2011-000136 Rev. 0, Richland, Washington. Available at http://energy.gov/sites/prod/files/Gap%20Analysis%20Rev%200%20Final.pdf.

IAEA (International Atomic Energy Agency). 1997. *Joint Convention on Safety of Spent Fuel Management and on Safety of Radioactive Waste Management*. INFCIRC/546, Vienna, Austria. Available at http://www.iaea.org/Publications/Documents/Infcircs/1997/infcirc546.pdf.

IAEA (International Atomic Energy Agency). 1998. *Durability of Spent Nuclear Fuels and Facility Components in Wet Storage*. IAEA–TECDOC–1012, Vienna, Austria. Available at http://www-pub.iaea.org/MTCD/publications/PDF/te_1012_prn.pdf.

IAEA (International Atomic Energy Agency). 2001. *The Use of Scientific and Technical Results from Underground Research Laboratory Investigations for the Geologic Disposal of Radioactive Waste*. IAEA–TECDOC–1243, Vienna, Austria. Available at http://www-pub.iaea.org/MTCD/Publications/PDF/te_1243_prn.pdf.

IAEA (International Atomic Energy Agency). 2003a. *Scientific and Technical Basis for the Geologic Disposal of Radioactive Wastes.* Technical Reports Series No. 413, Vienna, Austria. Available at http://www-pub.iaea.org/MTCD/publications/PDF/TRS413_web.pdf.

IAEA (International Atomic Energy Agency). 2003b. *Spent Fuel Performance Assessment and Research: Final Report of a Co-Ordinated Research Project on Spent Fuel Performance Assessment and Research (SPAR) 1997–2001*. IAEA–TECDOC–1343, Vienna, Austria. Available at http://www-pub.iaea.org/MTCD/Publications/PDF/TE_1343_web.pdf.

IAEA (International Atomic Energy Agency). 2005. *Radioactive Waste Management Studies and Trends*. IAEA/WMDB/ST/4, Vienna, Austria. Available at http://www-pub.iaea.org/MTCD/publications/PDF/WMDB-ST-4.pdf.

IAEA (International Atomic Energy Agency). 2006. *Understanding and Managing Ageing of Materials in Spent Fuel Storage Facilities*. Technical Reports Series No. 443, Vienna, Austria. Available at http://www-pub.iaea.org/MTCD/Publications/PDF/TRS443_web.pdf.

IAEA (International Atomic Energy Agency). 2011a. *Impact of High Burnup Uranium Oxide and Mixed Uranium-Plutonium Oxide Water Reactor Fuel on Spent Fuel Management*. IAEA Nuclear Energy Series No. NF-T-3.8, Vienna, Austria. Available at http://www-pub.iaea.org/MTCD/Publications/PDF/Pub1490_web.pdf.

IAEA (International Atomic Energy Agency). 2011b. *Disposal of Radioactive Wastes Specific Safety Requirements.* SSR-5, Vienna, Austria. Available at: http://www-pub.iaea.org/MTCD/publications/PDF/Pub1449_web.pdf.

IAEA (International Atomic Energy Agency). 2013. *Spent Fuel Storage Operation—Lessons Learned*. IAEA TECDOC Series No. 1725, Vienna, Austria. Available at http://www-pub.iaea.org/MTCD/Publications/PDF/TE-1725_web.pdf.

INPO (Institute of Nuclear Power Operations). 2011. *Special Report on the Nuclear Accident at the Fukushima Dai-ichi Nuclear Power Station*. INPO 11–005, Revision 0, Atlanta, Georgia. Available at http://www.wano.info/Documents/Lessons%20Learned.pdf.

In re Aiken County. 725 F.3d 255 (D.C. Cir. 2013).

Johnson, A.B. 1977. *Behavior of Spent Nuclear Fuel in Water Pool Storage.* BNWL–2256, Battelle–Pacific Northwest Laboratories, Richland, Washington. Available at http://www.ntis.gov/search/product.aspx?ABBR=BNWL2256.

Johnson, A.B., Jr. 1978. "Utility Spent Fuel Storage Experience." In Schumacher, J.F., ed. *Executive Conference on Spent Fuel Policy and Its Implications.* American Nuclear Society Executive Conference, April 2–5, 1978; Pineisle Resort, Buford, Georgia. University of Wisconsin, Madison, Wisconsin.

MRWS (West Cumbria Managing Radioactive Waste Safely Partnership). 2012. *The Final Report of the West Cumbria Managing Radioactive Waste Safely Partnership.* Copeland Borough Council, Cumbia, United Kingdom. Available at http://www.westcumbriamrws.org.uk/images/final-report.pdf.

NAS (National Academy of Sciences). 1995. *Technical Bases for Yucca Mountain Standards*. National Academy of Sciences/National Research Council of Board on Radioactive Waste Management, Committee on the Remediation of Buried and Tank Waste, National Academy Press, Washington, D.C.

NAS (National Academy of Sciences). 2000. *Long-Term Institutional Management of the U.S. Department of Energy Legacy Waste Sites.* National Academy of Sciences/National Research Council of Board on Radioactive Waste Management, Committee on the Remediation of Buried and Tank Waste, National Academy Press, Washington, D.C.

National Environmental Policy Act of 1969 (NEPA), as amended. 42 USC 4321 *et seq.*

NEA (Nuclear Energy Agency). 1997. *Lessons Learnt from Ten Performance Assessment Studies.* Organisation for Economic Co-Operation and Development, Paris, France. Available at http://www.oecd-nea.org/rwm/reports/1997/ipag.pdf.

NEA (Nuclear Energy Agency). 2006. *The Roles of Storage in the Management of Long-Lived Radioactive Waste*. Organization for Economic Cooperation and Development, Paris, France. Available at https://www.oecd-nea.org/rwm/reports/2006/nea6043-storage.pdf.

NEA (Nuclear Energy Agency). 2012. *The Post-Closure Radiological Safety Case for a Spent Fuel Repository in Sweden.* NEA/RWM/PEER(2012)2. Organization for Economic Cooperation and Development, Paris, France. Available at http://www.stralsakerhetsmyndigheten.se/Global/Slutförvar/NEA/SSM%202010-4132-95%20Final%20Report_NEA_RWM_PEER_2012_2.pdf%20564893_1_1.pdf.

New York v. NRC (*State of New York et al. v. U.S. Nuclear Regulatory Commission)*. 681 F.3d 471 (D.C. Cir. 2012). Accession No. ML12191A407.

NRC (U.S. Nuclear Regulatory Commission). 1979. *TMI-2 Lessons Learned Task Force Status Report and Short Term Recommendations*. NUREG–0578. Washington, D.C. Accession No. ML090060030.

NRC (U.S. Nuclear Regulatory Commission). 1980a. *NRC Action Plan Developed as a Result of the TMI-2 Accident*. NUREG–0660, Washington, D.C. Accession Nos. ML072470526, ML072470524.

NRC (U.S. Nuclear Regulatory Commission). 1980b. *TMI-Related Requirements for New Operating Licenses*. NUREG–0694, Washington, D.C. Accession No. ML072500081.

NRC (U.S. Nuclear Regulatory Commission). 1980c. *Clarification of TMI Action Plan Requirements*. NUREG–0737, Washington, D.C. Accession No. ML051400209.

NRC (U.S. Nuclear Regulatory Commission). 1996a. Memorandum from J.M. Taylor to NRC, dated July 26, 1996, regarding "Resolution of Spent Fuel Storage Pool Action Plan Issues." Washington, D.C. Accession No. ML003706364.

NRC (U.S. Nuclear Regulatory Commission). 1996b. Memorandum from J.M. Taylor to NRC, dated October 3, 1996, regarding "Assessment of Spent Fuel Cooling." Washington, D.C. Accession No. ML003706381.

NRC (U.S. Nuclear Regulatory Commission). 1997a. *Operating Experience Feedback Report: Assessment of Spent Fuel Cooling*. NUREG–1275, Volume 12, Washington, D.C. Accession No. ML010670175.

NRC (U.S. Nuclear Regulatory Commission). 1997b. Memorandum from L.J. Callan to NRC dated September 30, 1997, regarding "Followup Activities on the Spent Fuel Pool Action Plan." Washington, D.C. Accession No. ML003706412.

NRC (U.S. Nuclear Regulatory Commission). 2000. Memorandum from J.T. Larkins to G.M. Holohan, dated May 2, 2000, regarding "Resolution of GSI-173, Spent Fuel Pool Cooling for Operating Plants." Washington, D.C. Accession No. ML003710695.

NRC (U.S. Nuclear Regulatory Commission). 2001. *Technical Study of Spent Fuel Pool Accident Risk at Decommissioning Nuclear Power Plants*. NUREG–1738, Washington, D.C. Accession No. ML010430066.

NRC (U.S. Nuclear Regulatory Commission). 2006a. Letter from NRC to J. Parkyn, dated February 21, 2006, regarding "Issuance of Materials License No. SNM–2513 for the Private Fuel Storage Facility (TAC No. L23821)." Washington, D.C. Accession No. ML060450412.

NRC (U.S. Nuclear Regulatory Commission). 2006b. *Liquid Radioactive Release Lessons Learned Task Force Final Report*. Washington, D.C. Accession No. ML062650312.

NRC (U.S. Nuclear Regulatory Commission). 2007. *A Pilot Probabilistic Risk Assessment of a Dry Cask Storage System at a Nuclear Power Plant*. NUREG–1864, Washington, D.C. Accession No. ML071340012.

NRC (U.S. Nuclear Regulatory Commission). 2008. *Minimization of Contamination and Radioactive Waste Generation: Life-Cycle Planning*. Regulatory Guide 4.21, Washington, D.C. Accession No. ML080500187.

NRC (U.S. Nuclear Regulatory Commission). 2009a. *Degradation of Neutron-Absorbing Materials in the Spent Fuel Pool*. IN 2009–26, Washington, D.C. Accession No. ML092440545.

NRC (U.S. Nuclear Regulatory Commission). 2009b. "Radiological Environmental Monitoring For Nuclear Power Plants." Regulatory Guide 4.1, Revision 2, Washington, D.C. Accession No. ML091310141.

NRC (U.S. Nuclear Regulatory Commission). 2010a. *U.S. Department of Energy's Motion to Withdraw [Yucca Mountain*]. ASLBP No. 09–892–HLW–CAB04., Washington, D.C. Accession No. ML100621397.

NRC (U.S. Nuclear Regulatory Commission). 2010b. Safety *Evaluation Report Related to Disposal of High-Level Radioactive Wastes in a Geologic Repository at Yucca Mountain, Nevada—Volume 1: General Information*. NUREG–1949, Volume 1, Washington, D.C. Accession No. ML102440298.

NRC (U.S. Nuclear Regulatory Commission). 2010c. *Standard Review Plan for Spent Fuel Dry Storage Systems at a General License Facility*. NUREG–1536, Revision 1, Washington, D.C. Accession No. ML101040620.

NRC (U.S. Nuclear Regulatory Commission). 2010d. *Groundwater Task Force Final Report*. Washington, D.C. Accession No. ML101740509.

NRC (U.S. Nuclear Regulatory Commission). 2011a. *Technical Evaluation Report on the Content of the U.S. Department of Energy's Yucca Mountain Repository License Application—Preclosure Volume: Repository Safety Before Permanent Closure*. NUREG–2108, Washington, D.C. Accession No. ML11250A093.

NRC (U.S. Nuclear Regulatory Commission). 2011b. *Technical Evaluation Report on the Content of the U.S. Department of Energy's Yucca Mountain Repository License Application—Postclosure Volume: Repository Safety After Permanent Closure*. NUREG–2107, Washington, D.C. Accession No. ML11223A273.

NRC (U.S. Nuclear Regulatory Commission). 2011c. *Technical Evaluation Report on the Content of the U.S. Department of Energy's Yucca Mountain Repository License Application—Administrative and Programmatic Volume*. NUREG–2109, Washington, D.C. Accession No. ML11255A002.

NRC (U.S. Nuclear Regulatory Commission). 2011d. *Senior Management Review of Overall Regulatory Approach to Groundwater Protection*. SECY–11–0019, Washington, D.C. Accession No. ML12338A692.

NRC (U.S. Nuclear Regulatory Commission). 2012a. Letter to All Power Reactor Licensees and Holder of Construction Permits in Active or Deferred Status, dated March 12, 2012, regarding "Request for Information Persuant to Title 10 of the *Code of Federal Regulations* 50.54(f) Regarding Recommendations 2.1, 2.3, and 9.3, of the Near-Term Task Force Review of Insights from the Fukushima Dai-Ichi Accident." Washington, D.C. Accession No. ML12053A340.

NRC (U.S. Nuclear Regulatory Commission). 2012b. *Potential Chloride-Induced Stress Corrosion Cracking of Austenitic Stainless Steel and Maintenance of Dry Cask Storage System Canisters*. IN 2012–20, Washington, D.C. Accession No. ML12319A440.

NRC (U.S. Nuclear Regulatory Commission). 2012c. *Decommissioning Planning During Operations*. Regulatory Guide 4.22, Washington, D.C. Accession No. ML12158A361.

NRC (U.S. Nuclear Regulatory Commission). 2012d. "Inspection Program for Dry Storage of Spent Reactor Fuel at Independent Spent Fuel Storage Installations and for 10 CFR Part 71 Transportation Packages." Chapter 2690 in *NRC Inspection Manual*. Washington, D.C. Accession No. ML120390415.

NRC (U.S. Nuclear Regulatory Commission). 2013. "Memorandum and Order in the Matter of U.S Department of Energy (High Level Waste Repository)." CLI-13-08, Rockville, Maryland. Accession No. ML13322A744.

NRC (U.S. Nuclear Regulatory Commission). 2014. *Identification and Prioritization of the Technical Information Needs Affecting Potential Regulation of Extended Storage and Transportation of Spent Nuclear Fuel*. Washington, D.C. Accession No. ML14043A423.

Nuclear Waste Policy Act of 1982 (NWPA), as amended. 42 USC 10101 *et seq.*

NWMO (Nuclear Waste Management Organization). 2008. *Annual Report 2007: Moving Forward Together*. Toronto, Ontario. Available at http://www.nwmo.ca/uploads_managed/MediaFiles/327_NWMO_2007_Annual_Report_E.pdf.

NWMO (Nuclear Waste Management Organization). 2013. *Annual Report 2012: Learning More Together*. Toronto, Ontario. Available at http://www.nwmo.ca/uploads_managed/MediaFiles/2089_ar2012_english_web.pdf.

Sindelar, R.L., A.J. Duncan, M.E. Dupont, P.-S. Lam, M.R. Louthan, Jr., and T.E. Skidmore. 2011. *Materials Aging Issues and Aging Management for Extended Storage and Transportation of Spent Nuclear Fuel.* NUREG/CR–7116, Savannah River National Laboratory, Aiken, South Carolina. Accession No. ML11321A182.

Travis, R.J., R.E. Davis, E.J. Grove, and M.A. Azarm. 1997. *Safety and Regulatory Assessment of Generic BWR and PWR Permanently Shutdown Nuclear Power Plants*. NUREG/CR–6451, Brookhaven National Laboratory, Upton, New York. Accession No. ML082260098.

VEPCO (Virginia Electric and Power Company). 2011. *Virginia Electric and Power Company (Dominion) North Anna Power Station Units 1 and 2 North Anna Independent Spent Fuel Storage Installation Summary Report of August 23, 2011 Earthquake Response and Restart Readiness Determination Plan*. Richmond, Virginia. Accession No. ML11262A151.

Walker, J.F. 1979. *Long-Term Storage of Irradiated CANDU Fuel Under Water*. Whiteshell Nuclear Research Establishment, Pinawa, Manitoba. Available at http://www.ntis.gov/search/product.aspx?ABBR=N7932999.

Appendix C

Outreach and Correspondence

Appendix C

Outreach and Correspondence

This appendix provides a description of outreach activities and agencies and groups that the U.S. Nuclear Regulatory Commission (NRC) contacted during the preparation of this *Generic Environmental Impact Statement for Continued Storage of Spent Nuclear Fuel* (GEIS), and a listing of correspondence related to the NRC's environmental review. The NRC did not identify any cooperating agencies for the environmental review or receive any formal requests for cooperating agency status.

C.1 Outreach

The NRC staff conducted extensive outreach efforts during the preparation of the GEIS and Rule.

WCOUTREACH E-mail: The NRC staff used an e-mail account, WCOutreach@nrc.gov, to distribute information to subscribers regarding Waste Confidence. Through this e-mail account, the NRC staff provided periodic updates on activities, links to new information published in the NRC's Agencywide Document Access and Management Systems (ADAMS), and links to information on the NRC website. On October 25, 2012, when the NRC staff e-mailed the scoping notice to subscribers, the NRC's WCOutreach@nrc.gov e-mail distribution list consisted of approximately 1,050 individuals, including individuals who expressed interest in previous spent nuclear fuel (spent fuel) studies and efforts; members of the public on mailing lists for new reactor and license renewal environmental reviews; representatives from Federal, Tribal, State, and local governments; and representatives from industry and public advocacy groups and environmental organizations. In the months following publication of the draft GEIS and proposed Rule, the e-mail distribution list expanded to approximately 3,200 subscribers.

Public Meetings and Webinars: During the 70-day scoping comment period, the NRC conducted two webcast public scoping meetings and two webinars. The meetings and webinars each began with a slide presentation by NRC staff, which was followed by a question-and-answer period and a block of time dedicated to listening to and transcribing public scoping comments. During the 98-day public comment period on the draft GEIS and proposed Rule, the NRC conducted 13 public meetings on the draft documents. More information on the public comment period and meetings for the draft GEIS and proposed Rule can be found in Appendix D. Notices for all public meetings were published in the *Federal Register*, e-mailed, posted on the NRC website, and advertised by the NRC's Office of Public Affairs through press releases.

NRC Website: Throughout the rulemaking process, the NRC maintained a Waste Confidence webpage at www.nrc.gov/waste/spent-fuel-storage/wcd.html. The NRC regularly updated the website, which contained a specific section titled "Public Involvement in Waste Confidence," with related documents, new information, and frequently asked questions. The NRC will not maintain the Waste Confidence webpage after the revised Rule becomes effective. All documents posted on the Waste Confidence webpage are publicly available and all official agency records will continue to be available in ADAMS.

Monthly Status Update Public Teleconferences: In the months following closure of the scoping period and through publication of the draft GEIS, the NRC staff held monthly public status teleconferences to provide an update on activities related to the Waste Confidence rulemaking and GEIS. One final teleconference was held following the closure of the draft GEIS and proposed Rule comment period. These were Category 3 meetings (the type of NRC meetings where public participation is actively sought)—the public was invited to attend via telephone and ask questions of the NRC staff. Status update teleconferences were for informational purposes only and any comments made and questions asked during the teleconferences were not counted as comments on draft GEIS and proposed Rule. Transcripts and summaries of the teleconferences were posted to the Waste Confidence Directorate "Public Involvement in Waste Confidence" webpage and are available in ADAMS.

Tribal Contact: The scoping notice was mailed and e-mailed, when possible, to all Federally recognized Native American Tribes (1) located within 80 km (50 mi) of a nuclear power plant, (2) registered with the NRC for advance notification of shipments of irradiated reactor fuel and nuclear waste under Title 10 of the *Code of Federal Regulations* (CFR) Parts 71 and 73; or (3) previously expressing interest in the NRC's Yucca Mountain application activities (see ADAMS Accession No. ML12311A464 for an example of the Tribal outreach letter that transmitted the scoping notice and the tribal distribution list). Fifty-eight Tribal contacts were mailed a copy of the Waste Confidence scoping notice. In addition, the NRC corresponded with the Northern Chumash Tribal Council (recognized by the state of California) and the Santa Ynez Band of Chumash Indians (Federally recognized), which are both located near the Diablo Canyon Nuclear Plant.

The NRC also distributed the draft GEIS, proposed Rule, and public meeting notices to Tribal contacts. A CD-ROM copy of the draft GEIS, a hardcopy of the proposed Rule, and public meeting information was mailed to 76 Tribal contacts, and e-mail notification of the upcoming NRC mailing was also sent to those contacts with e-mail addresses. See ADAMS Accession No. ML13259A130 for an example of the Tribal outreach letter that transmitted the draft GEIS, proposed Rule, and public meeting information.

The NRC also initiated government-to-government consultation with the Prairie Island Indian Community. The Prairie Island Indian reservation is located adjacent to the Prairie Island Nuclear Generating Plant in Welch, Minnesota. Government-to-government meetings were

held between the NRC and Tribal representatives on June 13, 2013 and December 5, 2013. The Prairie Island Indian Community provided both oral and written comments during both the scoping and draft GEIS and proposed Rule comment periods.

State Contact: The NRC provided the scoping notice and notice of publication of the draft GEIS, proposed Rule, and scheduled public comment meetings to state liaison officers in all agreement and nonagreement states. The NRC also provided notification of the public status teleconferences.

U.S. Environmental Protection Agency (EPA) Contact: The NRC met with representatives of the EPA on November 5, 2012. The purpose of the meeting was to provide historical information on the Waste Confidence rule, to discuss the status of the environmental review and rulemaking, to discuss how the NRC was conducting new reactor and license renewal reviews in the interim while Waste Confidence was addressed, and to receive advice on the NRC's approach. The EPA provided comments on the scope of the GEIS (Accession No. ML13028A469) and comments on the proposed Rule and draft GEIS (Accession No. ML14016A089).

C.2 Correspondence

This section contains a chronological listing of correspondence related to the NRC's environmental review in preparation of this GEIS. The documents listed below can be found online through ADAMS at http://www.nrc.gov/reading-rm/adams.html. The ADAMS accession numbers for each document are included below.

October 24, 2012	NRC to Hold Public Scoping Meetings for Waste Confidence Environmental Study Nov. 14 in Rockville, MD. Press Release No. 12-119. Accession No. ML12298A295.
October 25, 2012	*Federal Register* Notice of Intent to Prepare an Environmental Impact Statement and Notice of Public Meetings. 77 FR 65137. Accession No. ML12312A178.
October 25, 2012	E-mail from WCOutreach@nrc.gov, *Federal Register* Notice (77 FRN 65137) for Waste Confidence EIS and Scoping. Accession No. ML13120A477.
October 31, 2012	Forthcoming Waste Confidence Scoping Meetings for the Environmental Impact Statement (November 14, 2012). Accession No. ML12306A224.

October 31, 2012	Notification of the Scoping Process for the Environmental Impact Statement for the Waste Confidence Decision and Rule Update and Notice of Public Meetings and Webinars (FSME–12–085). Accession No. ML12293A107.
November 6, 2012	E-mail from WCOutreach@nrc.gov, Link to Meeting Notice for Nov. 14 Waste Confidence Scoping Meetings. Accession No. ML13120A483.
November 8, 2012	E-mail from WCOutreach@nrc.gov, *Federal Register* Notice (77 FRN 65137) for Waste Confidence EIS and Scoping—and Nov. 14 Public Meeting Notice. Accession No. ML13120A481.
November 8, 2012	Letter to NRC Commissioners, from G. Fettus, M. Goldstein, and D. Curran, Notice of Intent to Prepare Waste Confidence EIS. Accession No. ML12314A345.
November 13, 2012	Letter to NRC Commissioners, from D. Brancato, Riverkeeper, Waste Confidence Scoping Meetings and Opportunity to Comment. Accession No. ML13184A154.
November 13, 2012	E-mail from WCOutreach@nrc.gov, Direct Comment Link and Waste Confidence Scoping Meeting Slides. Accession No. ML13120A478.
November 21, 2012	Forthcoming Webinars for the Environmental Impact Statement to Support an Updated Waste Confidence Decision and Rule (December 5 and 6, 2012). Accession No. ML12326A911.
November 27, 2012	E-mail from WCOutreach@nrc.gov, Upcoming December 5 and 6 Waste Confidence Webinars. Accession No. ML13120A479.
November 28, 2012	Letter to NRC Commissioners, from F. Collins, Tribal Administrator, Northern Chumash Tribal Council, Notice of Intent to Prepare Waste Confidence EIS. Accession No. ML13184A149.
December 5, 2012	Letter to D. Curran, Harmon, Curran, Spielberg & Eisenberg, L.L.P., from A. Macfarlane, Chairman, NRC, regarding the Waste Confidence Scoping Process. Accession No. ML12319A309. (Identical letters sent to G. Fettus and M. Goldstein.)
December 6, 2012	Summary of Public Scoping Meetings for Environmental Impact Statement to Support Waste Confidence Rulemaking (November 14, 2012). Accession No. ML12339A281.
December 26, 2012	Summary of Public Scoping Webinars for the Environmental Impact Statement to Support the Waste Confidence Rulemaking (December 5 and 6, 2012). Accession No. ML12356A293.

December 31, 2012	E-mail from WCOutreach@nrc.gov, Waste Confidence Scoping Meeting Summaries and Transcripts. Accession No. ML13120A480.
December 31, 2012	Notice of Forthcoming Public Teleconference to Discuss Status of Waste Confidence Environmental Impact Statement and Rulemaking (January 16, 2013). Accession No. ML12366A201.
January 2, 2013	Letter to F. Collins, Tribal Administrator, Northern Chumash Tribal Council, from K. McConnell, Director, Waste Confidence Directorate, NRC, regarding the Waste Confidence Scoping Process. Accession No. ML13002A221.
January 6, 2013	Letter to NRC Commissioners, from S. Cohen, Government and Legal Specialist, Santa Ynez Band of Chumash Indians, Notice of Intent to Prepare Waste Confidence EIS. Accession No. ML130500419.
January 9, 2013	E-mail from WCOutreach@nrc.gov, Waste Confidence Monthly Public Teleconferences. Accession No. ML13120A484.
January 11, 2013	Letter to S. Cohen, Government and Legal Specialist, Santa Ynez Band of Chumash Indians, from K. McConnell, Director, Waste Confidence Directorate, NRC, regarding the Waste Confidence Scoping Process. Accession No. ML13011A015.
January 11, 2013	Notice of Forthcoming Public Teleconference to Discuss Status of Waste Confidence Environmental Impact Statement and Rulemaking (FSME–13–003). Accession No. ML13011A150.
January 31, 2013	Summary of Public Teleconference to Discuss Status of Waste Confidence Environmental Impact Statement and Rulemaking (January 16, 2013). Accession No. ML13032A100.
January 31, 2013	Notice of Forthcoming Public Teleconference to Discuss Status of Waste Confidence Environmental Impact Statement and Rulemaking (February 20, 2013). Accession No. ML13031A063.
February 5, 2013	Notice of Forthcoming Public Teleconference to Discuss Status of Waste Confidence Environmental Impact Statement and Rulemaking (FSME-13–016). Accession No. ML13032A152.
February 5, 2013	E-mail from WCOutreach@nrc.gov, Waste Confidence teleconference meeting summary, transcript and upcoming meeting. Accession No. ML13120A475.

March 1, 2013	Summary of Public Teleconference to Discuss Status of Waste Confidence Environmental Impact Statement and Rulemaking (February 20, 2013). Accession No. ML13060A105.
March 4, 2013	Summary Report for the Waste Confidence Generic Environmental Impact Statement Scoping Process. Accession No. ML13060A136.
March 5, 2013	E-mail from WCOutreach@nrc.gov, Waste Confidence scoping summary report and upcoming teleconference information. Accession No. ML13120A476.
March 5, 2013	Notice of Forthcoming Public Teleconference to Discuss Status of Waste Confidence Generic Environmental Impact Statement and Rulemaking (March 20, 2013). Accession No. ML13063A465.
March 8, 2013	Letter to K. McConnell and A. Imboden, Waste Confidence Directorate, NRC, from D. Brancato, Riverkeeper, NRC Waste Confidence Update—Request for Public Meeting. Accession No. ML13102A054.
March 8, 2013	Notice of Forthcoming Public Teleconference to Discuss Status of Waste Confidence Environmental Impact Statement and Rulemaking (FSME–13–024). Accession No. ML13063A491.
March 28, 2013	Notice of Forthcoming Public Teleconference to Discuss Status of Waste Confidence Generic Environmental Impact Statement and Rulemaking (April 17, 2013). Accession No. ML13087A363.
April 5, 2013	Summary of Public Teleconference to Discuss Status of Waste Confidence Environmental Impact Statement and Rulemaking (March 20, 2013). Accession No. ML13095A362.
April 5, 2013	Notice of Forthcoming Public Teleconference to Discuss Status of Waste Confidence Environmental Impact Statement and Rulemaking (FSME-13–034). Accession No. ML13091A344.
April 11, 2013	E-mail from WCOutreach@nrc.gov, Upcoming April public teleconference and March meeting summary and transcript. Accession No. ML13120A482.
May 2, 2013	Summary of Public Teleconference to Discuss Status of Waste Confidence Environmental Impact Statement and Rulemaking (April 17, 2013). Accession No. ML13122A097.

May 6, 2013	Notice of Forthcoming Public Teleconference to Discuss Status of Waste Confidence Generic Environmental Impact Statement and Rulemaking (May 29, 2013). Accession No. ML13127A380.
May 8, 2013	E-mail from WCOutreach@nrc.gov, Waste Confidence April 17 meeting summary and transcript, and May 29 meeting notice. Accession No. ML13128A508.
May 14, 2013	Notice of Forthcoming Public Teleconference to Discuss Status of Waste Confidence Generic Environmental Impact Statement and Rulemaking (FSME-13-044). Accession No. ML13133A072.
May 14, 2013	Letter to D. Brancato, Riverkeeper, from K. McConnell, NRC, regarding NRC Waste Confidence Update—Request for Public Meeting. Accession No. ML13126A214.
May 23, 2013	Letter to NRC Commissioners, from K. Landis-Marinello, Assistant Attorney General, State of Vermont, States' Petition for Review of NRC Staff Scoping Decision, Spent Fuel Storage EIS (RIN 3150-AJ20; NRC-2012-0246). Accession No. ML13149A446.
May 24, 2013	Letter to A. Vietti-Cook, Secretary of the Commission, NRC, from K. Landis-Marinello, Assistant Attorney General, State of Vermont, Distributing States' Petition for Review of NRC Staff Scoping Decision; Spent Fuel Storage EIS (RIN 3150-AJ20; NRC-2012-0246). Accession No. ML13149A446.
May 30, 2013	Notice of Forthcoming Public Teleconference to Discuss Status of Waste Confidence Generic Environmental Impact Statement and Rulemaking (June 19, 2013). Accession No. ML13150A263.
June 4, 2013	Notice of Forthcoming Public Teleconference to Discuss Status of Waste Confidence Generic Environmental Impact Statement and Rulemaking (FSME-13-053). Accession No. ML13154A434.
June 6, 2013	Summary of Public Teleconference to Discuss Status of Waste Confidence Generic Environmental Impact Statement and Rulemaking (May 29, 2013). Accession No. ML13158A024.
June 13, 2013	E-mail from WCOutreach@nrc.gov, Waste Confidence June 19th status teleconferencing notice, and May 29th meeting summary and transcript. Accession No. ML13171A353.

June 24, 2013	E-mail from WCOutreach@nrc.gov, Waste Confidence Commission review draft documents now available. Accession No. ML13175A390.
July 17, 2013	E-mail from WCOutreach@nrc.gov, Waste Confidence June 19th Status Teleconference Meeting Summary and Transcript. Accession No. ML13219A201.
July 23, 2013	Notice of Forthcoming Public Teleconference to Discuss Status of Waste Confidence Generic Environmental Impact Statement and Rulemaking (August 14, 2013). Accession No. ML13205A393.
July 23, 2013	Letter to W. Sorrell, Attorney General, State of Vermont, from A. Macfarlane, Chairman, NRC, regarding the Petition for Review of Staff Scoping Decision. Accession No. ML13204A315. (Identical letters sent to D. Springer, G. Jepsen, M. Coakley, and E. Schneiderman.)
July 31, 2013	Notice of Forthcoming Public Teleconference to Discuss Status of Waste Confidence Generic Environmental Impact Statement and Rulemaking (FSME-13-075). Accession No. ML13211A429.
August 5, 2013	E-mail from WCOutreach@nrc.gov, Commission Approves Publication of Proposed Waste Confidence Rule and Draft Generic EIS. Accession No. ML13219A211.
August 20, 2013	Letter to A. Macfarlane, Chairman, NRC, from D. Kraft, Director, Nuclear Energy Information Service, regarding TIME SENSITVE—request for NRC to hold waste confidence meeting in Chicago. Accession No. ML13233A338.
August 21, 2013	Summary of August Public Teleconference to Discuss Status of Waste Confidence Generic Environmental Impact Statement and Rulemaking (August 14, 2013). Accession No. ML13234A111.
August 22, 2013	Notice of Forthcoming Public Teleconference to Discuss Status of Waste Confidence Generic Environmental Impact Statement and Rulemaking (September 12, 2013). Accession No. ML13234A172.
August 29, 2013	Letter to D. Kraft, Director, Nuclear Energy Information Service, from A. Vietti-Cook, Secretary of the Commission, NRC, regarding letter to Chairman A. Macfarlane dated August 20, 2013. Accession No. ML13241A442.

September 3, 2013	Notice of Public Meeting to Receive Comments on the Waste Confidence Draft Generic Environmental Impact Statement and Proposed Rule (Rockville, MD; October 1, 2013). Accession No. ML13246A472.
September 3, 2013	Notice of Public Meeting to Receive Comments on the Waste Confidence Draft Generic Environmental Impact Statement and Proposed Rule (Denver, CO; October 3, 2013). Accession No. ML13246A461.
September 4, 2013	Letter to Senator B. Boxer, Chairman, Committee on Environment and Public Works, U.S. Senate, from A. Powell, Office of Congressional Affairs, NRC, regarding Waste Confidence Draft Generic Environmental Impact Statement and Proposed Rule. Accession No. ML13226A075. (Identical letters sent to Senators F. Upton, E. Whitfield, J. Shimkus, and T. Carper, with cc to Representatives H. Waxman, B. Rush, P. Tonko, and J. Sessions.)
September 4, 2013	E-mail from WCOutreach@nrc.gov, Important Waste Confidence Public Participation Information. Accession No. ML14141A172.
September 5, 2013	NRC Schedules 12 Meetings Nationwide on Waste Confidence Proposed Rule and Environmental Study. Press Release No. 13-072. Accession No. ML13248A595.
September 5, 2013	Notice of Public Meeting to Receive Comments on the Waste Confidence Draft Generic Environmental Impact Statement and Proposed Rule (San Luis Obispo, CA; October 7, 2013—postponed). Accession No. ML13248A323.
September 5, 2013	Notice of Public Meeting to Receive Comments on the Waste Confidence Draft Generic Environmental Impact Statement and Proposed Rule (Carlsbad, CA; October 9, 2013—postponed). Accession No. ML13248A338.
September 5, 2013	Notice of Forthcoming Public Teleconference to Discuss Status of Waste Confidence Generic Environmental Impact Statement and Rulemaking (FSME-13-090). Accession No. ML13246A465.
September 6, 2013	*Federal Register* Notice of public meetings, Proposed Waste Confidence Rule and Draft Generic Environmental Impact Statement. 78 FR 54789. Accession No. ML14141A269.

September 6, 2013	E-mail from WCOutreach@nrc.gov, Waste Confidence Draft Generic Environmental Impact Statement now available. Accession No. ML14141A173.
September 6, 2013	Notice of Public Meeting to Receive Comments on the Waste Confidence Draft Generic Environmental Impact Statement and Proposed Rule (Perrysburg, OH; October 15, 2013—postponed). Accession No. ML13249A443.
September 6, 2013	Notice of Public Meeting to Receive Comments on the Waste Confidence Draft Generic Environmental Impact Statement and Proposed Rule (Minnetonka, MN; October 17, 2013—postponed). Accession No. ML13249A536.
September 6, 2013	Notice of Public Meeting to Receive Comments on the Waste Confidence Draft Generic Environmental Impact Statement and Proposed Rule (Chelmsford, MA; October 28, 2013). Accession No. ML13249A570.
September 6, 2013	Notice of Public Meeting to Receive Comments on the Waste Confidence Draft Generic Environmental Impact Statement and Proposed Rule (Tarrytown, NY; October 30, 2013). Accession No. ML13249A567.
September 6, 2013	Notice of Public Meeting to Receive Comments on the Waste Confidence Draft Generic Environmental Impact Statement and Proposed Rule (Charlotte, NC; November 4, 2013). Accession No. ML13249A545.
September 6, 2013	Notice of Public Meeting to Receive Comments on the Waste Confidence Draft Generic Environmental Impact Statement and Proposed Rule (Orlando, FL; November 6, 2013). Accession No. ML13249A559.
September 6, 2013	Notice of Public Meeting to Receive Comments on the Waste Confidence Draft Generic Environmental Impact Statement and Proposed Rule (Rockville, MD; November 14, 2013). Accession No. ML13249A563.

September 6, 2013	Notice of Public Meeting to Receive Comments on the Waste Confidence Draft Generic Environmental Impact Statement and Proposed Rule (Oak Brook, IL; October 24, 2013—postponed). Accession No. ML13249A565.
September 12, 2013	NRC Seeks Public Comment on Proposed Rule and Environmental Study of Extended Storage of Spent Nuclear Fuel. Press Release No. 13-077. Accession No. ML13255A379.
September 13, 2013	*Federal Register* Notice of proposed rule, Waste Confidence—Continued Storage of Spent Nuclear Fuel. 78 FR 56776. Accession No. ML13256A004.
September 13, 2013	*Federal Register* Notice of draft generic environmental impact statement; public meetings and request for comment, Draft Waste Confidence Generic Environmental Impact Statement. 78 FR 56621. Accession No. ML14141A270.
September 13, 2013	Opportunity to Comment on Draft Generic Environmental Impact Statement and Proposed Rule to Amend 10 CFR Part 51—Waste Confidence—Continued Storage of Spent Nuclear Fuel (FSME-13-094). Accession No. ML13256A133.
September 13, 2013	E-mail from WCOutreach@nrc.gov, Announcing the start of the Waste Confidence public comment period. Accession No. ML14141A174.
September 16, 2013	Letter to F. Collins, Tribal Administrator, Northern Chumash Tribal Council, from K. McConnell, Waste Confidence Directorate, NRC, Opportunity to Comment on Draft Generic Environmental Impact Statement and Proposed Rule to Amend 10 CFR 51.23—Waste Confidence—Continued Storage of Spent Nuclear Fuel. Accession No. ML13259A130. (Identical letters sent to 75 additional Tribal contacts and the National Congress of American Indians.)
September 18, 2013	E-mail from S. Lopas, Waste Confidence Directorate, NRC, Notification of upcoming Nuclear Regulatory Commission mailing. Accession No. ML14140A713. (E-mail sent to 56 Tribal contacts.)
September 19, 2013	*Federal Register* Notice of public meetings, Proposed Waste Confidence Rule and Draft Generic Environmental Impact Statement. 78 FR 57538. Accession No. ML14160B249.

September 19, 2013	Letter to A. Macfarlane, NRC, from Representative H. Johnson, U.S. House of Representatives, regarding request for a Waste Confidence public meeting in Atlanta, Georgia. Accession No. ML13263A063.
September 24, 2013	Summary of September Public Teleconference to Discuss Status of Waste Confidence Generic Environmental Impact Statement and Rulemaking (September 12). Accession No. ML13267A384.
September 25, 2013	E-mail from WCOutreach@nrc.gov, Confirming our October 3 Denver meeting and meeting registration instructions. Accession No. ML14141A175.
September 30, 2013	E-mail from WCOutreach@nrc.gov, This week's Waste Confidence meetings will be held. Accession No. ML14141A177.
October 4, 2013	E-mail from WCOutreach@nrc.gov, Waste Confidence California Meetings have been Postponed. Accession No. ML14141A163.
October 4, 2013	NRC Postpones California Meetings on Waste Confidence Because of Government Shutdown. Press Release No. 13-083. Accession No. ML13277A694.
October 4, 2013	Letter to A. Macfarlane, Chairman, NRC, from D. Curran, Harmon, Curran, Spielberg & Eisenberg, L.L.P., regarding Government Shutdown and Waste Confidence Meetings. Accession No. ML13281A829. (Identical letter sent to M. Goldstein.)
October 7, 2013	Letter to Secretary, Commissioners, NRC, from M. Olson, Nuclear Information and Resource Service, Southeast, regarding Public Comment on the GEIS on Waste Confidence, NUREG 2157, and proposed Waste Confidence Rule, 10CFR51. Accession No. ML13281A840.
October 9, 2013	Summary of October 1 Public Meeting in Rockville, Maryland, to Receive Comments on the Waste Confidence Draft Generic Environmental Impact Statement and Proposed Rule. Accession No. ML13282A611.
October 9, 2013	E-mail from WCOutreach@nrc.gov, POSTPONED: Perrysburg and Minnetonka Waste Confidence Meetings. Accession No. ML14141A166.

October 9, 2013	E-mail from WCOutreach@nrc.gov, POSTPONED: Oak Brook Waste Confidence Meeting. Accession No. ML14141A165.
October 9, 2013	NRC Postpones Ohio, Minnesota Meetings on Waste Confidence Because of Government Shutdown. Press Release No. 13-085. Accession No. ML13282A511.
October 18, 2013	Notice of Public Meeting to Receive Comments on the Waste Confidence Draft Generic Environmental Impact Statement and Proposed Rule (Oak Brook, IL; November 12, 2013—new date). Accession No. ML13291A322.
October 18, 2013	Notice of Public Meeting to Receive Comments on the Waste Confidence Draft Generic Environmental Impact Statement and Proposed Rule (Carlsbad, CA; November 18, 2013—new date). Accession No. ML13294A063.
October 18, 2013	Notice of Public Meeting to Receive Comments on the Waste Confidence Draft Generic Environmental Impact Statement and Proposed Rule (San Luis Obispo, CA; November 20, 2013—new date). Accession No. ML13294A065.
October 18, 2013	Notice of Forthcoming Public Teleconference to Discuss Status of Waste Confidence Generic Environmental Impact Statement and Rulemaking (October 30, 2013). Accession No. ML13291A153.
October 21, 2013	E-mail from WCOutreach@nrc.gov, Announcing new dates for Oak Brook, Carlsbad, and San Luis Obispo meetings. Accession No. ML14141A167.
October 22, 2013	Summary of October 3 Public Meeting in Denver, Colorado, to Receive Comments on the Waste Confidence Draft Generic Environmental Impact Statement and Proposed Rule. Accession No. ML13295A427.
October 23, 2013	Letter to Representative H. Johnson, U.S. House of Representatives, from A. Macfarlane, Chairman, NRC, regarding letter dated September 19, 2013, requesting a Waste Confidence public meeting in Atlanta, Georgia. Accession No. ML13274A550.
October 25, 2013	NRC Schedules Nov. 4 Meeting in Charlotte to Take Comments on Proposed Spent Nuclear Fuel Rule and Environmental Study. Press Release No. II-13-059. Accession No. ML13298A873.

October 25, 2013	Notice of Public Meeting to Receive Comments on the Waste Confidence Draft Generic Environmental Impact Statement and Proposed Rule (Perrysburg, OH; December 2, 2013—new date). Accession No. ML13298A120.
October 25, 2013	Notice of Public Meeting to Receive Comments on the Waste Confidence Draft Generic Environmental Impact Statement and Proposed Rule (Minnetonka, MN; December 4, 2013—new date). Accession No. ML13298A118.
October 28, 2013	NRC Extends Public Comment Period for Proposed Rule and Environmental Study on Extended Storage of Spent Nuclear Fuel. Press Release No. 13-089. Accession No. ML13301A723.
October 28, 2013	NRC Schedules Nov. 6 Meeting in Orlando to Take Comments on Proposed Spent Nuclear Fuel Rule and Environmental Study. Press Release No. II-13-060. Accession No. ML13301A733.
October 28, 2013	E-mail from WCOutreach@nrc.gov, Waste Confidence comment period extension and important public meeting information. Accession No. ML14141A170.
October 28, 2013	Letter to B. Rafter, Executive Director, Georgia Women's Action for New Directions, from K. McConnell, Waste Confidence Directorate, NRC, regarding Request for Waste Confidence Public Meeting in Atlanta. Accession No. ML13277A374.
October 29, 2013	*Federal Register* Notice of rescheduling of public meeting, Proposed Waste Confidence Rule and Draft Generic Environmental Impact Statement. 78 FR 64412. Accession No. ML14141A272.
October 29, 2013	*Federal Register* Notice of rescheduling of public meetings, Proposed Waste Confidence Rule and Draft Generic Environmental Impact Statement. 78 FR 64413. Accession No. ML14141A266.
October 29, 2013	Notice of Public Teleconference to Receive Comments on the Waste Confidence Draft Generic Environmental Impact Statement and Proposed Rule (December 9, 2013). Accession No. ML13302B935.
October 31, 2013	E-mail from WCOutreach@nrc.gov, Important correction for Waste Confidence December 9th teleconference. Accession No. ML14141A171.

November 4, 2013	*Federal Register* Notice of rescheduling of public meetings, Proposed Waste Confidence Rule and Draft Generic Environmental Impact Statement. 78 FR 65903. Accession No. ML14141A267.
November 5, 2013	Letter to D. Curran, Harmon, Curran, Spielberg & Eisenberg, L.L.P., from A. Macfarlane, Chairman, NRC, regarding Government Shutdown and Waste Confidence Meetings. Accession No. ML13281A773.
November 7, 2013	*Federal Register* Notice of proposed rule, extension of comment period, Waste Confidence—Continued Storage of Spent Nuclear Fuel. 78 FR 66858. Accession No. ML14141A271.
November 18, 2013	E-mail from WCOutreach@nrc.gov, Availability of transcripts, meeting handouts and the remaining public meetings. Accession No. ML14141A162.
November 19, 2013	Summary of October 28 Public Meeting in Chelmsford, Massachusetts, to Receive Comments on the Waste Confidence Draft Generic Environmental Impact Statement and Proposed Rule. Accession No. ML13323B497.
November 19, 2013	Summary of October 30 Public Meeting in Tarrytown, New York, to Receive Comments on the Waste Confidence Draft Generic Environmental Impact Statement and Proposed Rule. Accession No. ML13323B515.
November 19, 2013	Summary of October Public Teleconference to Discuss Status of Waste Confidence Generic Environmental Impact Statement and Rulemaking. Accession No. ML13323B491.
November 27, 2013	Summary of November 4 Public Meeting in Charlotte, North Carolina, to Receive Comments on the Waste Confidence Draft Generic Environmental Impact Statement and Proposed Rule. Accession No. ML13331A719.
November 27, 2013	Summary of November 6 Public Meeting in Orlando, Florida, to Receive Comments on the Waste Confidence Draft Generic Environmental Impact Statement and Proposed Rule. Accession No. ML13331A720.

December 10, 2013	Summary of November 12 Public Meeting in Oak Brook, Illinois, to Receive Comments on the Waste Confidence Draft Generic Environmental Impact Statement and Proposed Rule. Accession No. ML13343A161.
December 12, 2013	Summary of November 14 Public Meeting in Rockville, Maryland, to Receive Comments on the Waste Confidence Draft Generic Environmental Impact Statement and Proposed Rule. Accession No. ML13346A905.
December 12, 2013	E-mail from WCOutreach@nrc.gov, Availability of Meeting Summaries and Transcripts. Accession No. ML14141A178.
December 17, 2013	E-mail from WCOutreach@nrc.gov, Reminder: Waste Confidence public comment period closes this Friday, December 20. Accession No. ML14141A179.
December 17, 2013	Letter to A. Macfarlane, Chairman, NRC, from B. Gibson, Board of Supervisors, San Luis Obispo County, regarding Waste Confidence Rule and Diablo Canyon Power Plant. Accession No. ML14008A021.
December 18, 2013	Letter to M. Olson, Nuclear Information and Resource Service, Southeast, from A. Macfarlane, Chairman, NRC, regarding Public Comment on the GEIS on Waste Confidence, NUREG 2157, and proposed Waste Confidence Rule, 10CFR51. Accession No. ML13282A228.
December 18, 2013	Summary of November 18 Public Meeting in Carlsbad, California, to Receive Comments on the Waste Confidence Draft Generic Environmental Impact Statement and Proposed Rule. Accession No. ML13352A432.
December 18, 2013	Summary of November 20 Public Meeting in San Luis Obispo, California, to Receive Comments on the Waste Confidence Draft Generic Environmental Impact Statement and Proposed Rule. Accession No. ML13352A447.
December 18, 2013	Summary of December 2 Public Meeting in Perrysburg, Ohio, to Receive Comments on the Waste Confidence Draft Generic Environmental Impact Statement and Proposed Rule. Accession No. ML13352A453.

December 18, 2013	Summary of December 4 Public Meeting in Minnetonka, Minnesota, to Receive Comments on the Waste Confidence Draft Generic Environmental Impact Statement and Proposed Rule. Accession No. ML13352A486.
December 20, 2013	Summary of December 9 Public Teleconference to Receive Comments on the Waste Confidence Draft Generic Environmental Impact Statement and Proposed Rule. Accession No. ML13354C057.
January 8, 2014	Notice of Forthcoming Public Teleconference to Discuss Status of Waste Confidence Generic Environmental Impact Statement and Rulemaking (January 29, 2014). Accession No. ML14008A104.
January 8, 2014	E-mail from WCOutreach@nrc.gov, Waste Confidence January 29th status teleconference meeting notice. Accession No. ML14141A180.
January 16, 2014	Notice of Forthcoming Public Teleconference to Discuss Status of Waste Confidence Generic Environmental Impact Statement and Rulemaking. (FSME-14-005). Accession No. ML14016A389.
January 23, 2014	NRC Revises Review Schedule for Waste Confidence Environmental Study and Final Rule. Press Release No. 14-003. Accession No. ML14023A710.
January 23, 2014	E-mail from WCOutreach@nrc.gov, Waste Confidence schedule adjustment. Accession No. ML14141A181.
February 14, 2014	Summary of January 29 Public Teleconference to Discuss Status of Waste Confidence Generic Environmental Impact Statement and Rulemaking. Accession No. ML14045A242.
February 18, 2014	Letter to B. Gibson, Board of Supervisors, San Luis Obispo County, from A. Vietti-Cook, Secretary of the Commission, NRC, regarding letter to Chairman Allison M. Macfarlane, dated December 17, 2013. Accession No. ML14050A092.
March 7, 2014	E-mail from WCOutreach@nrc.gov, Waste Confidence Public Commission Meeting—March 21, 2014, at 1:00p EDT. Accession No. ML14141A159.

March 13, 2014	Notification of the NRC Staff's Commission Paper SECY-14-0025 on Waste Confidence and Upcoming Commission Meeting (FSME-14-025). Accession No. ML14071A441.
March 19, 2014	E-mail from WCOutreach@nrc.gov, How to access this Friday's Commission meeting on Waste Confidence. Accession No. ML14141A160.
March 26, 2014	E-mail from WCOutreach@Nrc.gov, Waste Confidence Commission meeting transcript, slides, and archived webcast. Accession No. ML14141A161.
April 24, 2014	Letter to A. Imboden, NRC, from the States of Vermont and Connecticut, and the Commonwealth of Massachusetts, Need for a supplemental waste confidence DGEIS (Docket NRC-2012-0246). Accession No. ML14118A077.

References

10 CFR Part 71. *Code of Federal Regulations*, Title 10, *Energy*, Part 71, "Packaging and Transportation of Radioactive Material." Washington, D.C.

10 CFR Part 73. *Code of Federal Regulations*, Title 10, *Energy,* Part 73, “Physical Protection of Plants and Materials.” Washington, D.C.

Appendix D

Draft GEIS and Proposed Rule Comment Summaries and Responses

Appendix D

Draft GEIS and Proposed Rule Comment Summaries and Responses

See NUREG-2157, Volume 2 for Appendix D: Draft GEIS and Proposed Rule Comment Summaries and Responses

Appendix E

Analysis of Spent Fuel Pool Leaks

Appendix E

Analysis of Spent Fuel Pool Leaks

This appendix describes the environmental impacts of spent fuel pool leaks during the short-term storage timeframe.[1] For the analysis presented in this *Generic Environmental Impact Statement for Continued Storage of Spent Nuclear Fuel* (GEIS), the U.S. Nuclear Regulatory Commission (NRC) assumes that spent nuclear fuel (spent fuel) is removed from the pool within 60 years of the end of the reactor's licensed life for operation. Once removed from the spent fuel pool, the spent fuel will be transferred to dry casks for storage in an independent spent fuel storage installation or shipment to a repository.

As described in Section E.2, this appendix evaluates the potential offsite (i.e., outside the owner-controlled area) environmental impacts of spent fuel pool leaks. The environmental consequences of accidents, (e.g., cask drops) and natural events (e.g., earthquakes) that damage the spent fuel pool structure and result in a catastrophic loss of water volume in the spent fuel pool are discussed in Section 4.18 and Appendix F.

Section E.1 provides a historical overview of information pertaining to spent fuel pool leaks, including information on spent fuel pool designs, operation, and the history of spent fuel pool leaks at commercial nuclear power plants. Section E.2 describes the potential offsite environmental impacts of spent fuel pool leaks to groundwater, surface water, soils, and public health. Section E.3 presents historical data on spent fuel pool leaks.

E.1 Background

As of May 2014, 100 commercial nuclear reactors are licensed to operate in the United States, and 5 additional units are under construction. These operating reactors are located at 62 sites in 30 states (Figure E-1). Of these 100 reactors, 65 are pressurized water reactors and 35 are boiling water reactors. Because some of these reactors share spent fuel pools, there are 55 pressurized water reactor and 35 boiling water reactor spent fuel pools. In addition to operating reactor spent fuel pools, there are six spent fuel pools (5 pressurized water reactor, 1 boiling water reactor) located at five decommissioning reactors sites.

[1] As discussed in Section 1.8, the NRC assumes that all spent fuel is removed from the pools and placed in dry-cask storage by the end of the short-term storage timeframe. This appendix, therefore, does not analyze the impacts of a spent fuel pool leak after the short-term storage timeframe because a spent fuel pool will not be used to store spent fuel after that time.

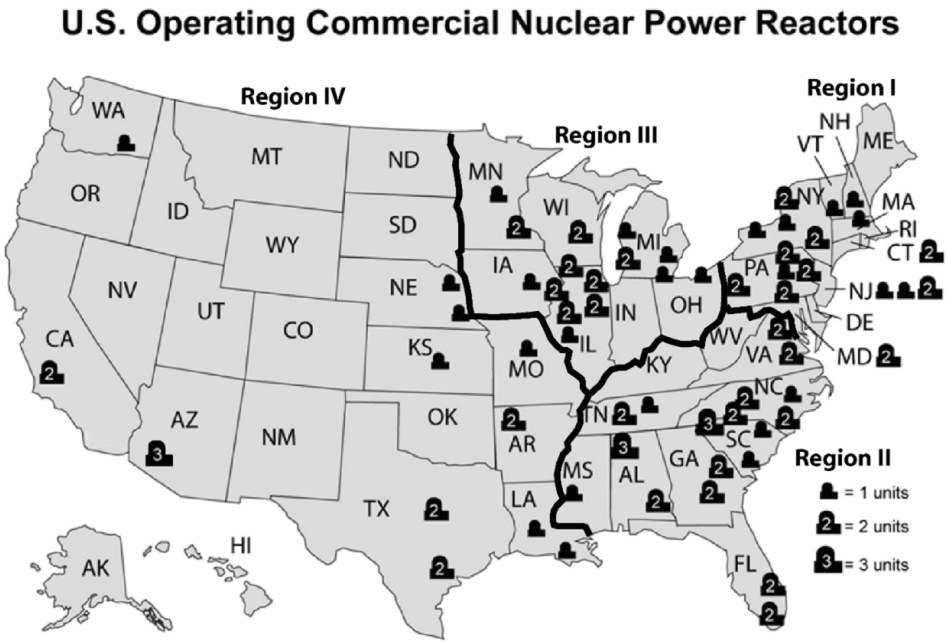

Figure E-1. Locations of U.S. Nuclear Power Plants (NRC 2013a)

E.1.1 Spent Fuel Pools

Figure E-2 shows diagrams of generic pressurized water reactor and boiling water reactor spent fuel pools. In general, spent fuel pools for boiling water reactor plants are elevated structures within the containment building and are filled with demineralized water. Spent fuel pools at pressurized water reactors are generally located in an auxiliary building adjacent to the reactor building and contain borated water (e.g., 2,200 to 2,400 ppm boron, pH ~4.8). A typical spent fuel pool for a pressurized water reactor is about 12 m [40 ft] deep and 12 m [40 ft] or more in each horizontal direction (Copinger et al. 2012). Water is maintained at a minimum depth of at least 6 m [20 ft] above the spent fuel bundles to ensure sufficient shielding of the spent fuel bundles. Water levels are maintained by periodically adding water to the pool to compensate for evaporation. Typically, the reinforced concrete walls are between 0.6 and 3 m [2 and 10 ft] thick and the inside surfaces are lined by welded stainless-steel plates to form a leak-tight barrier. These plates are generally about 6 to 13 mm [0.25 to 0.5 in.] thick and joined by full-penetration seam welds. The liner plates may also be plug welded between the seams to studs embedded in the concrete. In addition, all licensees actively monitor spent fuel pools for leakage, either directly though leak-detection systems or through various procedural controls. Leak-detection systems typically consist of several channels installed over the seams formed when spent fuel pool liner plates are welded together. These channels often can be monitored individually and are designed so leaked water empties into drains (i.e., “tell-tale” drains) where it can be monitored and returned to either sumps or other cleanup or collection systems (NRC 1997a).

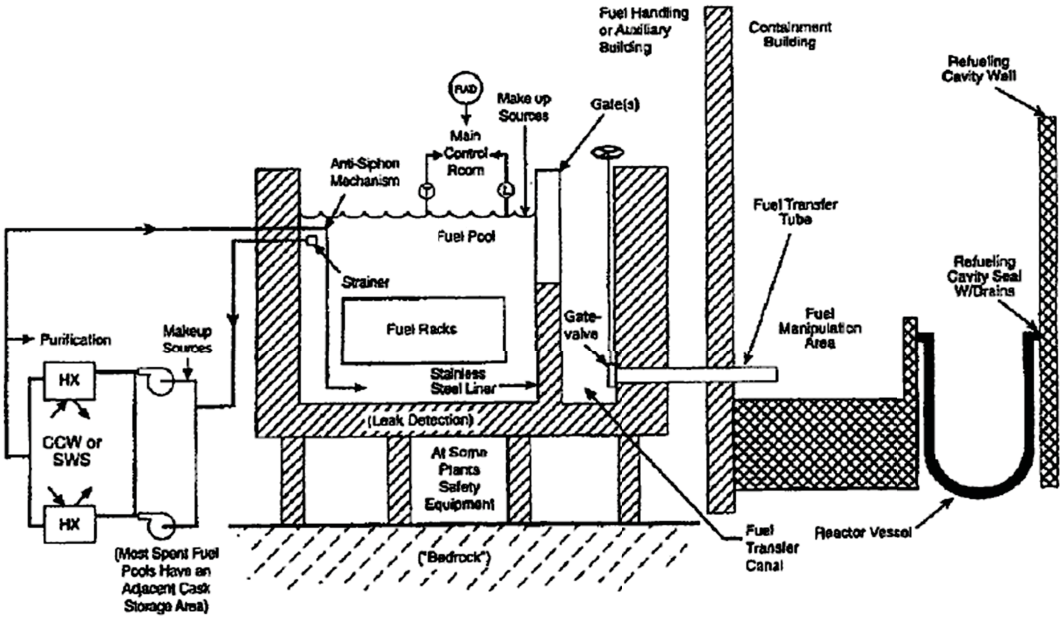

(a)

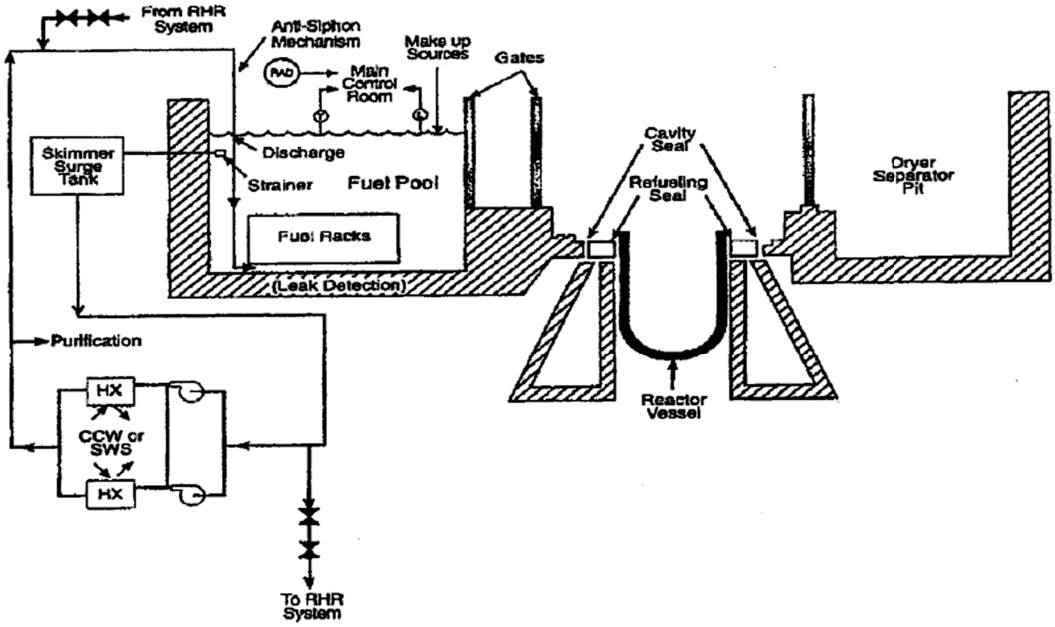

(b)

Figure E-2. Generic Layouts of Spent Fuel Pools and Transfer Systems for (a) Pressurized Water Reactors and (b) Boiling Water Reactors (NRC 1997a)

In addition, spent fuel pools are serviced by spent fuel pool cooling and purification systems. These systems provide cooling to the spent fuel in the pool, provide makeup water to the pool, maintain water chemistry, and remove fission products from the spent fuel pool water.

There is also one standalone spent fuel pool facility in the United States, the GE-Hitachi Nuclear Energy Americas, LLC, Morris wet storage facility (GEH Morris) in Morris, Illinois (DOE 2003). Though GEH Morris was originally designed as a commercial reprocessing facility, only the storage facility was completed and remains in operation. GEH Morris currently holds 3217 spent fuel assemblies from commercial nuclear power plants. These spent fuel assemblies are stored in two pools. As with spent fuel pools at nuclear power plants, the GEH Morris spent fuel pools are stainless-steel-lined reinforced concrete structures with leak-detection systems (GE 2004).

Spent Fuel Pool Maintenance

Even though the reactor is no longer operating during the short-term storage timeframe, a licensee is still bound by the terms and conditions of its operating license until the license is terminated. The safety of spent fuel storage is established for each facility through a safety analysis report prepared by the licensee to support its application for an operating license and reviewed by the NRC. Each safety analysis report includes a number of operational conditions and limitations important to safe spent fuel storage. These conditions and limitations are subject to regulations that restrict the changes that can be implemented without prior NRC approval. Among these regulations are requirements to implement managerial and administrative controls to ensure safe operation through implementation of the facility's quality assurance program (Title 10 of the *Code of Federal Regulations* [CFR] 50.54(a)(1)) and requirements for licensees to obtain a license amendment prior to implementing changes to the facility or facility procedures that do not meet certain criteria (10 CFR 50.59). In addition to these regulations, administrative technical specifications for nuclear power plants typically include a requirement to establish, implement, and maintain a broad range of procedures for safe operation of the facility. The design basis of the various facility structures, systems, and components and the licensee's NRC-approved quality assurance program, change control processes, and plant procedures ensure that the facility structures, systems, and components will operate and be maintained within established safety parameters to accomplish their functions during normal operating as well as accident conditions.

Licensees are required to monitor the performance and condition of structures, systems, and components important to safety (10 CFR 50.65). Monitoring provides reasonable assurance that the structures, systems, and components are capable of fulfilling their intended functions. Often referred to as the "Maintenance Rule," 10 CFR 50.65 further requires the licensee to take appropriate corrective action when the performance or condition of a structure, system, or component important to safety does not conform to established performance criteria. The main objective of the Maintenance Rule is to monitor the overall continuing effectiveness of

maintenance programs used by the licensees to ensure that safety-related (and certain nonsafety-related) structures, systems, and components are capable of performing their intended functions. All nuclear power plants have specific aging management programs to inspect, monitor, detect, and trend the aging of spent fuel structure concrete, liner plate and structural steel. The aging management programs also include acceptance criteria that can be used to evaluate the inspection results and determine if the spent fuel pool structure can perform its intended function or if corrective action is needed. The inspections are performed periodically at a frequency of 5 to 10 years.

For nuclear power plants that have undergone license renewal, the existing aging management program for the spent fuel pool concrete structure and liner plate is enhanced for the period of extended operation to monitor for leakage from the spent fuel pool. The enhancement requires monitoring to ensure that leak-chase channels embedded in the concrete as a part of the liner plate are open, unclogged, and allow free flow of water from the spent fuel pool liner plate. This leaked water is then collected, analyzed, treated, and disposed of properly. This approach helps ensure that the water from the spent fuel pool does not leak to the environment through cracks in the concrete. These inspections and monitoring activities help ensure that issues associated with aging of spent fuel pools will be identified and addressed in a timely manner, decreasing the likelihood that a spent fuel pool would develop a long-term, undetected leak due to aging-related degradation mechanisms. After shutdown, licensees may modify the aging management programs implemented as part of license renewal, through the appropriate regulatory mechanism (e.g., a license amendment request) or in accordance with the NRC's requirements at 10 CFR 50.59(c)(1). However, as discussed above, licensees are still bound by the requirements at 10 CFR 50.65 to maintain structures, systems, and components related to the spent fuel pool.

E.1.2 Groundwater Monitoring and Licensee Response to Leaks at Nuclear Power Plants

This section describes the NRC's requirements for identifying subsurface contamination and the nuclear industry's implementation of groundwater monitoring at nuclear power plant sites.

On June 17, 2011, the NRC issued its Decommissioning Planning Rule (76 FR 35512). The purpose of this rule, which amended regulations at 10 CFR Parts 20, 30, 40, 50, 70, and 72, is to "improve decommissioning planning and thereby reduce the likelihood that facilities under the NRC's jurisdiction will become legacy sites" (76 FR 35512). A legacy site is one with complex issues that is in a decommissioning status and whose owner cannot complete the decommissioning work for technical or financial reasons (76 FR 35512). The Decommissioning Planning Rule, through amended regulations at 10 CFR 20.1406 and 20.1501, requires licensees of operating facilities to "minimize the introduction of significant residual radioactivity into the site, including the subsurface, and to perform radiological surveys to identify the extent of significant residual radioactivity at their sites, including the subsurface" (NRC 2012). The

NRC has found that, in general, groundwater monitoring conducted in accordance with the Groundwater Protection Initiative developed by the Nuclear Energy Institute, a nuclear industry consortium, is adequate to comply with these regulations (NRC 2012). While licensees are not required to implement groundwater monitoring in accordance with the Groundwater Protection Initiative, they must still demonstrate compliance with the regulations at 10 CFR 20.1501 to perform subsurface surveys to identify contamination. For new nuclear power plants, licensees are subject to the additional requirements of 10 CFR 20.1406(a)-(b), of which "monitoring and routine surveillance programs are an important part of minimizing potential contamination" (NRC 2008).

The Nuclear Energy Institute developed its Groundwater Protection Initiative in 2006 in response to leaks containing radioactive material at several plants. The Initiative is described in NEI 07–07, *Industry Ground Water Protection Initiative – Final Guidance Document* (NEI 2007). All operating and decommissioning power reactor licensees have committed to follow the Initiative, which identifies actions to improve licensee response to inadvertent releases, including releases from spent fuel pools that may result in low, but detectible, levels of plant-related radioactive materials in subsurface soils and water. The Initiative identifies the actions licensees are expected to take, including the development of written groundwater protection programs, improved stakeholder communications, and program oversight. An important objective of the Initiative is to detect leaks well before radionuclide concentrations approach regulatory limits (e.g., the NRC's 10 CFR Part 20 dose limits) for radioactive releases (NEI 2007). The Initiative also addresses detection and remediation of leaks. The Electric Power Research Institute, another industry organization, has published guidance to licensees on the design and implementation of a groundwater-monitoring program (EPRI 2008).

As part of these efforts, the nuclear power industry has committed to improving communication with external stakeholders, including members of the public as well as local, State, and Federal government officials. This includes: (i) periodic briefings on their site-specific groundwater protection programs; (ii) prompt notice to the cognizable authorities whenever significant onsite spills or leaks into groundwater occur or onsite or offsite monitoring results exceed monitoring standards; (iii) a written 30-day report to the NRC for any monitoring result for onsite groundwater that is, or may be used as, a source of drinking water that exceeds monitoring criteria; and (iv) an annual radiological environmental operating report or the annual radioactive effluent release report that documents onsite groundwater sample results and a description of any significant onsite leaks or spills into groundwater (NEI 2007).

Licensees might perform additional site-specific monitoring and reporting, based on State or local requirements, or agreements between the licensee and other interested parties. For example, as part of its settlement of spent fuel pool issues raised by parties to the Indian Point Units 2 and 3 relicensing proceeding, the licensee committed to publish the results of

groundwater monitoring at Indian Point on a quarterly basis to a publicly available website and to conduct additional fish sampling in accordance with its monitoring plan (Entergy 2012).

In April 2011, the NRC evaluated industry performance in *Summary of Results from Completion of NRC's Temporary Instruction on Groundwater Protection, TI–2515/173 Industry Groundwater Protection Initiative* (NRC 2011a). This report was based on inspections conducted between August 2008 and August 2010 at all nuclear power plant sites. The report found that groundwater-monitoring programs had been implemented at virtually all nuclear power plant sites, and that licensees achieved an aggregate 95 percent completion of the NEI 07–07 Hydrology and Geology, and Site Assessment objectives. For the onsite groundwater-monitoring objective, the completion rate was 92 percent (NRC 2011a). Based on a subsequent one-time inspection of licensees from the April 2011 report with five or more incomplete program elements, the NRC found that all elements of the Groundwater Protection Initiative had been implemented at all but three sites. For the three remaining sites, the remaining program elements had been added to the licensees' corrective action program (NRC 2014). The NRC continues to monitor the implementation and maintenance of licensees' groundwater-monitoring programs through routine inspections performed at all nuclear power plant sites.

Licensee responses to leaks are dictated by the requirements of various NRC regulations. If a spent fuel pool leaks and has the potential to result in onsite or offsite contamination, a licensee would be required by the NRC's regulations at 10 CFR 20.1501(a)(2) to perform surveys that are reasonable under the circumstances to evaluate the magnitude, extent, and potential radiological hazard of contamination. Based on the circumstances of the leak, a licensee may need to adjust its monitoring program (e.g., add more monitoring wells) to adequately characterize the extent of the contamination (NRC 2009). As required by 10 CFR 20.1501(b), licensees must document the location and amount of residual subsurface radioactivity in their decommissioning records. Further, as described earlier in this section, licensees have committed to providing a description of any significant onsite leaks or spills to groundwater in their annual radiological environmental operating reports or the annual radioactive effluent release reports required by 10 CFR 50.36a. For leaks to groundwater, Regulatory Guide (RG) 1.21, *Measuring, Evaluating, and Reporting Radioactive Material in Liquid and Gaseous Effluents and Solid Waste*, states that licensees should develop a site conceptual model, using standards such as American National Standards Institute/American Nuclear Society report 2.17–2010, *Evaluation of Subsurface Radionuclide Transport at Commercial Nuclear Power Plants* (ANSI/ANS 2010) to characterize, model, and monitor groundwater flow and radionuclide transport (NRC 2009). This conceptual and subsequent numerical model would be used as the basis for estimating the dispersion of radionuclide releases to groundwater. The monitoring program would confirm whether remediation programs are effective in precluding offsite impacts to groundwater resources.

E.1.3 Remediation Techniques

Various technologies are currently available to remediate the contaminated groundwater. Licensees decide whether and how to remediate a radioactive release to groundwater based on a variety of circumstances, including the source and magnitude of the contamination events; the local and regional groundwater systems (as reflected in the site conceptual model); the NRC's regulatory requirements (e.g., the radiological criteria for license termination in 10 CFR Part 20, Subpart E); and other Federal, State, and local requirements (e.g., U.S. Environmental Protection Agency [EPA] drinking-water standards).

As described in Ferry et al. (1999) groundwater contamination can be limited and mitigated through hydraulic isolation and capture, using groundwater extraction methods such as low-discharge pumping wells and interceptor trenches or a funnel and gate system for near-surface plumes. The extracted groundwater can be treated to remove highly absorptive radionuclides (e.g., strontium-90 and cesium-137) using appropriate separation technologies (e.g., ion-exchange systems). However, tritium cannot be absorbed in those systems.

Various separation technologies can be applied to remove contaminants from the extracted groundwater. For radioisotopes of elements such as barium, cesium, cobalt, iodide, manganese, plutonium, and strontium, various treatment technologies are commonly used in the chemical- and wastewater-treatment industries. Most of these technologies can be broadly classified into two groups, depending on the reaction mechanism involved (i.e., precipitation or sorption [including ion exchange]) (IAEA 1999).

Using remediation techniques to reduce tritium concentrations to levels below concentrations exceeding EPA drinking-water standards is more difficult than for other groundwater contaminants because tritium cannot be chemically absorbed. In general, the method used to remediate tritium is monitored natural attenuation with selective groundwater extraction for high-concentration areas. Monitored natural attenuation is a proven approach for addressing radiological contamination that has been accepted by the EPA (1999) and many State environmental regulatory agencies, such as the New York Department of Environmental Conservation (NYSDEC 2010). Nevertheless, treatment technologies that have potential application for reducing very high tritium levels in groundwater include water distillation, combined electrolysis and catalytic exchange, bithermal hydrogen-water process, girdler sulfide process, palladium membrane reactor, and the GE-Hitachi Nuclear Energy integrated systems (Geniesse and Stegen 2009).

E.2 Environmental Impacts of Spent Fuel Pool Leaks

This section addresses the environmental impacts of spent fuel pool leaks that might occur during the short-term storage timeframe. The NRC's Decommissioning Planning Rule,

discussed in Section E.1.2, requires licensees to identify the extent of significant residual radioactivity at their sites, including the subsurface (NRC 2012). Any significant radioactivity identified by licensees must be addressed during the decommissioning process to meet the license-termination requirements of 10 CFR Part 20, Subpart E. Consequently, the impacts from spent fuel pool leaks that result in contamination that remains onsite are addressed as part of the decommissioning and license-termination processes and are outside the scope of this GEIS. The environmental impacts resulting from both normal operations and accidents during decommissioning activities and all onsite or offsite residual radioactive material that may remain after license termination are addressed in *Generic Environmental Impact Statement on Decommissioning of Nuclear Facilities* (NRC 2002) and *Generic Environmental Impact Statement in Support of Rulemaking on Radiological Criteria for License Termination of NRC-Licensed Nuclear Facilities* (NRC 1997b), respectively.

E.2.1 Factors that Influence the Impacts of Spent Fuel Pool Leaks

A combination of factors minimizes the likelihood that a spent fuel pool leak occurring during the short-term storage timeframe will result in significant offsite environmental impacts. The combination of spent fuel pool design and maintenance; operational practices (e.g., spent fuel pool leakage monitoring and groundwater monitoring), site hydrogeological characteristics; and radionuclide-transport properties together make the likelihood very low that an undetected leak from the spent fuel pool will migrate offsite. These factors, plus NRC oversight and regulatory controls, will ensure that licensees identify and diminish potential consequences should a leak that results in an offsite release occur.

E.2.1.1 Spent Fuel Pool Design, Operation and, Monitoring

As noted below in Section E.3, spent fuel pool leaks have been documented at 13 nuclear power plant sites, and at two additional sites where the spent fuel pool was identified as a potential source of onsite contamination. Spent fuel pool leaks, while unpredictable, seldom occur. Stringent design features and operational controls minimize these occurrences. As discussed, all operating spent fuel pools are lined with stainless-steel liners that form a leak-tight barrier between the water in the pool and the concrete walls of the pool. In addition, all licensees actively monitor for leaks from spent fuel pools and will continue to do so throughout the short-term storage timeframe. In most cases, the combination of the spent fuel pool liner and leakage monitoring prevent spent fuel pool water from leaking undetected into the environment. Further, as described in Section E.1.1, the licensee is required to continuously ensure the integrity of the spent fuel pool liner and structure by maintaining a low-corrosive environment in the spent fuel pool water through proper water chemistry control.

Nonetheless, relatively small cracks can occur in the stainless-steel liner due to intergranular stress-corrosion cracking and crevice corrosion of the stainless-steel liner, seam or plug weld defects, or damage to the liner, resulting in leakage from the spent fuel pool (Copinger et al.

2012). For spent fuel pools with leakage-collection systems installed, these systems could become clogged or obstructed, which could cause the water to back up in the space between the liner and concrete. Spent fuel pool water that bypasses the collection system can migrate through construction joints and cracks in the concrete due to shrinkage, creep, or alkali silica reaction, resulting in release of contaminated water outside the pool. Whether resulting from leakage through the liner or clogging in the leakage-collection system, spent fuel pool leaks are uncommon and unpredictable. However, knowledge and techniques gained from earlier industry and NRC studies of spent fuel pool leaks have resulted in heightened awareness of leaks and earlier detection and mitigation.

Significant short-term water loss from a spent fuel pool is likely to be identified by licensee monitoring of spent fuel pool water levels. Further, because of NRC requirements to identify and minimize contamination (see Section E.1.2), licensees would likely identify and mitigate, if necessary, the impacts from any significant short-term water loss before noticeable offsite environmental impacts would occur (e.g., the releases at Hatch and Turkey Point which resulted in no noticeable offsite environmental impacts and are described in Section E.3). As a result, the NRC's analysis in this GEIS considers a long-term, low-volume undetected leak from a spent fuel pool as the most probable scenario in which spent fuel pool leakage would lead to an offsite environmental impact. To go undetected, the leak rate would have to be sufficiently low as to not exceed the fluctuations in water level of a spent fuel pool lost to evaporation. This is so because the spent fuel pool water level is constantly measured by instrumentation and routinely monitored by licensees. Also, licensees must perform routine inspections of leak-detection systems and physically inspect the spent fuel pool area for leakage.

Based on operational experience, the model leak used for analysis here is assumed to correspond to a leak rate of approximately 380 L/d [100 gpd] (NRC 2004). In analyzing the impacts of a spent fuel pool leak, the NRC assumed a leak rate similar to the rate of water lost due to evaporation, which would effectively double the makeup rate to the spent fuel pool. A leak of this magnitude would likely be identified in an expeditious manner because of licensee monitoring and surveillance.

In addition to spent fuel pool design and operational controls, as described in Section E.1.2, nuclear power plant licensees have implemented onsite groundwater-monitoring programs that satisfy the subsurface survey requirements of 10 CFR 20.1501. Onsite groundwater monitoring makes it unlikely that leakage from the spent fuel pool would remain undetected long enough for any contamination to migrate offsite. In addition, a groundwater-monitoring program based on a site characterization that conforms to standards (e.g., ANSI/ANS 2.17–2010) and a configuration of monitoring wells that takes into account the most likely leakage pathway (i.e., the spent fuel pool) would further reduce the likelihood that a leak would remain undetected long enough for contamination to migrate offsite.

E.2.1.2 Radionuclides in Spent Fuel Pools and Radionuclide Transport

Impacts from spent fuel pool leakage occur from radionuclide contaminants present in spent fuel pool water. The sources of radionuclide contaminants in spent fuel pool water are activation products and fission products. Activation products are elements formed from the neutron bombardment of a stable element and fission products are elements formed as a byproduct of a nuclear reaction and radioactive decay of other fission products. The sources of activation products are corrosion and wear deposits (including corrosion films on the fuel bundle surfaces). Fission products come from bundles with rods that failed in-reactor or from intact bundles that adsorbed circulating fission products (Johnson 1977).

Table E-1 lists radionuclides of concern expected to be present in the spent fuel pool water. The initial concentration column represents the concentration of radionuclides assumed to be present at the start of the short-term storage timeframe. The final concentration column represents those radionuclides at the end of the short-term storage timeframe, assuming only radioactive decay. Actual concentrations would vary based on the efficiency of the spent fuel pool purification system and the integrity of the spent fuel assemblies stored in the pool. Because of radioactive decay and the spent fuel pool purification system, spent fuel pool leaks that occur later in the short-term storage timeframe will likely have less impact on onsite soil and groundwater quality due to the lower concentration of radionuclides present in the leaked spent fuel pool water.

Table E-1. Spent Fuel Pool Radionuclides of Concern

Nuclide	Half-Life[(a)]	Initial Concentration (μCi/mL)[(b)]	Final Concentration (μCi/mL)
Co-58	72 days	3.5×10^{-4}	–
Co-60	5.3 years	8.0×10^{-4}	3.1×10^{-7}
Cs-134	2.1 years	8.6×10^{-4}	–
Cs-137	30 years	1.3×10^{-3}	3.3×10^{-4}
H-3	12.3 years	2.9×10^{-2}	1.0×10^{-3}
Sr-90	28.8 years	5.9×10^{-6}	1.4×10^{-6}

(a) Johnson (1977).
(b) NRC (2006a).

As discussed in the preceding section, spent fuel pool water with radioactive contaminants could leak through small, intergranular stress-corrosion or crevice-corrosion cracks in the stainless-steel liner into the space between the liner and the concrete. Because concrete has a very low permeability, it serves as an additional barrier between leaked spent fuel pool water and the environment. However, contaminated water could migrate to the environment through construction joints and cracks in the concrete if the water backs up in the space between the

liner and concrete and a sufficient hydraulic head is developed. As radionuclides migrate through the concrete structure, their concentrations in the leaked water and the volume released to the environment could be reduced by sorption onto the concrete material. Sorption, a process by which a substance in solution attaches onto a solid material, can retard the movement of radionuclides and thus reduce radionuclide concentrations in the leaked water.

Spent fuel pool water will likely leave the concrete structure at or near the ground surface and above the local unconfined water table. The initial migration of radionuclides from the spent fuel pool leak is usually vertically downward through the vadose zone (i.e., the surrounding and underlying unsaturated soil, backfill, or other near-surface, disturbed materials). However, the direction, rate, and volume of the leaked spent fuel pool water migration in the vadose zone is influenced by the zone's ambient water content, the moisture and pressure gradients within the material, and the associated volume of the liquid released that may cause local saturation (or perching of the released fluid) due to the material's inability to transmit water at the rate released (i.e., insufficient permeability).

If a sufficient leak volume is released or the unsaturated material underlying the pool has hydrologic conditions to transmit the leaked water, the soil "wetting event" associated with the spent fuel pool leak can cause vertical radionuclide migration to reach an underlying shallow water table or unconfined aquifer (i.e., a saturated hydrogeological unit) and thus contaminate the aquifer. The rate of water movement would depend on the existing water content of the porous media and the permeability (an intrinsic property of the porous media related to pore sizes). For low water contents, the rate of water movement downward would be slow. Consequently, it is possible that the water would initially be contained within the site area, but if the leak continues to be undetected, it will flow downwards in the direction of the aquifer. Once in the aquifer, the travel time to the environment outside the controlled boundary would depend upon the hydraulic gradient, the hydraulic properties of the aquifer, and the distance to the site boundary.

Various hydrologic and chemical processes could reduce the environmental impacts of radionuclides associated with leaked spent fuel pool water. As the contaminant plume evolves, the radionuclide concentrations may continue to decrease due to mixing, dilution, and radioactive decay. Different radioisotopes decay at different rates depending on their half-lives (see Table E-1). In addition, adsorption of radionuclides onto the aquifer matrix material may significantly delay the transport of radionuclides in the subsurface environment and keep radionuclide concentrations at low levels in groundwater. Further, adsorption may retard the movement of radionuclides because radionuclide mass is adsorbed on solid surfaces and becomes unavailable for transport by water. Although desorption of radionuclides from the aquifer matrix material back into the groundwater may eventually occur, concentrations will be much less than if no sorption occurred. Different radionuclides have different degrees of adsorptive interaction with geologic media due to the geologic materials and water chemistry. Some radionuclides (e.g., tritium) do not adsorb onto soil and bedrock and, therefore, move

generally at the same rate and direction as groundwater. Other radionuclides (e.g., strontium-90 and cesium-137) strongly adsorb onto geologic media and, thus, move much slower than the groundwater velocity and at reduced concentrations compared to the source of a leak. The degree of radionuclide adsorption and retardation depends on the properties of the geologic media (e.g., mineralogy, reactive surface area, and presence of organic matter) and groundwater chemistry (e.g., pH, oxidation-reduction potential, and complexing ion concentration).

E.2.1.3 Influence of Site Hydrological Conditions

Although it is unlikely that a leak from a spent fuel pool of sufficient magnitude and duration would go undetected long enough to result in offsite consequences, several factors mitigate any potential impacts should a leak occur. In particular, characteristics of groundwater flow and transport of radionuclides in groundwater would limit the amount of radioactivity that would travel offsite and reduce its concentration. A review of Final Safety Analysis Reports for existing and proposed nuclear power plants, licensee Radioactive Effluent and Environmental Reports, and other relevant reports indicates that nuclear power plants have certain common hydrologic characteristics such as being located near large bodies of water and being sited in areas where the presence of a vadose zone would tend to reduce the amount of radioactive material leaving the site and lessen the concentration. Because of the siting criteria of 10 CFR Part 100 spent fuel pools are often located, and will continue to be located, in areas with certain similar hydrologic characteristics.

By their nature, nuclear power plants require large volumes of water to provide cooling to plant systems. As a result, nuclear power plants, which include spent fuel pools, are typically located adjacent to, or near, large surface waterbodies (e.g., rivers, lakes, and oceans). Regional groundwater flow in the vicinity of most spent fuel pools, particularly shallow water table or unconfined aquifer flow, is toward these large surface waterbodies. Localized water table flow around spent fuel pools can be influenced by a variety of physical features and hydrological conditions. Subsurface features (e.g., basements) or surface features (e.g., buildings and paved areas) can result in localized disturbances to shallow groundwater flow directions and velocities. In addition, short-term (transient) factors (e.g., droughts, floods, and daily tidal influences) can induce a temporary change in shallow groundwater flow directions and rates. Nevertheless, despite these localized or short-term effects, the NRC's assessment of hydrologic conditions at existing nuclear power plant sites indicates that the water table aquifers at these sites typically have a predominantly horizontal flow component with ultimate discharge into an adjacent or nearby large waterbody.

Because most nuclear power plants are located at sites where the shallow unconfined groundwater at the site flows into the nearby surface waterbody, leaked water from the spent fuel pool at these sites would travel toward, and ultimately discharge into, the nearby surface waterbody. However, this travel time is often significant because the typical spent fuel pool

location adjacent to or in the vicinity of a large surface waterbody coincides with a relatively flat (i.e., small) hydraulic gradient in the shallow water table. Significant radiological decay of spent fuel pool contaminants occurs over the long travel times produced from a flat hydraulic gradient, resulting in reduced concentrations in the shallow water table.

Given the typical location of nuclear power plants near large surface waterbodies, the siting of reactors typically in areas of lower population density, and the typically large size of the licensee-controlled area surrounding the spent fuel pool and entire facility, it is unlikely that groundwater users will be located between the spent fuel pool and the nearest receiving surface waterbody. Put differently, it is unlikely that groundwater users will draw groundwater downgradient of the spent fuel pool, but upgradient of the surface waterbody. As a result, it is unlikely that local groundwater users would be situated in the downgradient path of a spent fuel pool related groundwater contaminant plume. The same site factors likewise make it unlikely that local groundwater pumping will have a significant influence on shallow groundwater flow conditions near the spent fuel pools (i.e., capture the spent fuel pool related plume due to pumping). In sum, for nuclear power plant sites with typical hydrological conditions, it is unlikely that any shallow water table aquifer users in the vicinity of the nuclear power plant would be affected by water leaked from a spent fuel pool. Rather, for spent fuel pools located at sites with these typical characteristics, any environmental impacts of spent fuel pool leakage would result from the discharge of contamination to the surface waterbody.

In many cases, groundwater users located outside the licensee-controlled area surrounding spent fuel pool locations use deeper confined aquifers (i.e., deeper aquifers separated from the shallow water table by one or more horizontally continuous low-permeability layers). Potable water supply wells are often intentionally placed in deeper aquifer units because of the sensitivity of shallow water table aquifers to surface sources of contamination (e.g., septic systems) and the impacts to shallow water supplies from climate variability. In addition, as with the shallow groundwater users discussed above, the typically large size of the licensee-controlled area surrounding the facility makes it unlikely that local groundwater pumping in the deeper confined aquifer would significantly influence shallow aquifer horizontal or vertical gradients at the spent fuel pool location. Moreover, it would be improbable for local deep aquifer potable wells to capture spent fuel pool affected groundwater from a shallow unconfined aquifer separated from the deeper system by a low-permeability confining layer.

Consequently, for nuclear power plant sites that exhibit the hydrologic conditions discussed above, the offsite environmental impacts would be minimal because groundwater contamination would likely either stay onsite or migrate toward a nearby surface waterbody. For contamination that remains onsite, licensees would be required to address any residual contamination as part of the license-termination process. Alternatively, if discharged to a large waterbody, as discussed in Section E.2.2.2, the quantities of radioactive material discharged to nearby surface

waters would be comparable to quantities associated with permitted, treated effluent discharges from operating nuclear power plants.

For spent fuel pools located at sites with hydrological conditions different from those described above, a leak from a spent fuel pool has the potential to affect nearby groundwater users. These potential impacts are discussed in Section E.2.2.1.

E.2.2 Analysis of the Impacts of Spent Fuel Pool Leaks

Systems or structures can experience undetected radioactive leaks over a prolonged period and those that are buried or in contact with soil (e.g., spent fuel pools) are particularly susceptible to undetected leakage (NRC 2006b). An important conclusion of the NRC Lessons Learned Task Force report (see Section E.3.1) is that the near-term health of the offsite public has not been affected by inadvertent liquid releases to the environment stemming from previous spent fuel pool leaks at U.S. nuclear facilities (NRC 2006b). As a result, environmental impacts from past leaks to groundwater have been minimal. Further, a senior management review of the NRC Groundwater Task Force (see Section E.3.1) concurred with the Groundwater Task Force's conclusion that the NRC is accomplishing its stated mission of protecting public health, safety, and the environment through its response to groundwater leaks and spills, consistent with its regulatory framework (NRC 2011b). This protection will continue through the short-term timeframe and will likely continue to be strengthened based on operating experience.

In the unlikely event of offsite migration, offsite physical resources that might be adversely affected by spent fuel pool leaks are groundwater, surface water, and soils. Potential public health impacts through these affected resources must also be considered. As described in Sections E.2.1.1–E.2.1.3, a variety of factors work together to make it unlikely that a leak from a spent fuel pool would result in offsite consequences. These include design and operational controls for the spent fuel pool, which should result in the detection and resolution of a leak before it develops sufficient volume to migrate offsite; radionuclide-transport properties, which would result in lower contaminant concentrations in the leak volume; and site hydrological characteristics, which lessen the likelihood that a leak would migrate offsite. As discussed in Section E.1.3, various remediation strategies can be employed in the event of a leak; however, the decision about whether and how to remediate a radioactive release to groundwater is based on a variety of circumstances including, but not limited to, the magnitude of the contamination, the NRC's regulatory requirements (e.g., the radiological criteria for license termination described in 10 CFR Part 20, Subpart E), and other Federal, State and local requirements (e.g., EPA drinking-water requirements).

E.2.2.1 Groundwater

Historically, radiological contamination from spent fuel pool leaks has remained onsite within each licensee's owner-controlled area or traveled to a nearby surface waterbody (see

Section E.3). Because these leaks have remained onsite or were discharged to large surface waterbodies, where significant dilution occurred, there have been no impacts to any offsite groundwater wells used as a potable resource. As described in Section E.2.1.3, this is mainly because the duration or volume of water leaked from the spent fuel pool was insufficient to result in elevated radionuclide concentrations away from the source or because the spent fuel pools are sited in areas where the hydrologic conditions either impede the flow of leaked water away from the source (e.g., flat hydraulic gradient) or direct flow to the nearby surface waterbody.

In the short-term timeframe, spent fuel pool design (stainless-steel liners and leakage-collection systems) and operational controls (monitoring and surveillance of spent fuel pool water levels) make it unlikely that a leak will remain undetected long enough such that contamination of the offsite environment would exceed any regulatory requirement (e.g., the NRC dose limit or EPA-mandated Maximum Contaminant Level). In addition, the onsite groundwater-monitoring programs implemented at all sites with spent fuel pools provide added protection with respect to identifying a spent fuel pool leak and, if necessary, isolating and remediating contaminated groundwater onsite. In addition, a variety of physical processes associated with radionuclide transport (see Section E.2.1.2) and hydrologic characteristics associated with typical nuclear power plant settings (see Section E.2.1.3) would mitigate the impacts from the offsite migration of future spent fuel pool leakage. These physical processes and hydrologic characteristics include radionuclide adsorption, dilution, and decay; delayed transport times due to the relatively flat hydraulic gradients in the shallow water tables; lengthy distance to local groundwater users; and the likelihood that local groundwater usage is in deeper confined aquifers. Further, current and future spent fuel pool sites are required to have routine environmental monitoring programs in place that should take samples at offsite groundwater sources (e.g., potable or irrigation) in areas where the hydraulic gradient or recharge properties are suitable for contamination (NRC 1991a,b). Finally, any detection of onsite contamination would likely result in additional monitoring, including additional sampling of any nearby private wells, as part of an expanded environmental monitoring program. With these measures and characteristics in place, it is improbable that offsite migration of spent fuel pool leaks will occur or go undetected.

However, it is possible that a nuclear power plant could be sited in a location in which the hydrological conditions would not preclude the offsite migration of contaminated groundwater in the event of a leak. In the unlikely event that a leak goes undetected at these sites and the resulting groundwater plume reaches the offsite environment, the leak could be of sufficient magnitude and duration that contamination of a groundwater source above a regulatory limit (e.g., a Maximum Contaminant Level for one or more radionuclide) could occur. The NRC acknowledges that, in that unlikely event, the radiological impacts on groundwater quality resulting from a spent fuel pool leak during the short-term timeframe could noticeably alter, but not destabilize a groundwater resource. However, because of the relatively small size of the

maximum leak rate likely to escape detection (see Section E.2.1.1), the impacts to groundwater would likely be highly localized and would not be expected to impact regional groundwater resources. If contamination from a spent fuel pool leak were to exceed a Maximum Contaminant Level for one or more radionuclides at a groundwater source that currently supplies water to public water supplies or that has the potential to supply a public water supply (including private wells), the EPA could take emergency action under the Safe Drinking Water Act (EPA 1991). Emergency actions include, but are not limited to, providing alternative water supplies, public notification of potentially affected users, and remediation of the contamination (EPA 1991).

The impacts of a spent fuel pool leak on offsite groundwater receptors depend on many factors, including the volume and rate of water released from the spent fuel pool, the radionuclide content and concentration and water chemistry of the spent fuel pool water, the direction of groundwater flow, the distance to an offsite groundwater receptor, the velocity or transport rates of radionuclides through the subsurface, and radioactive decay rates. However, as discussed previously, it is unlikely that a leak of sufficient quantity and duration could occur without detection, or that such a leak would not be impeded by physical processes and hydrologic characteristics typical at spent fuel pool locations. Therefore, based on the low probability of a leak with sufficient quantity and duration to reach offsite locations, the detection and monitoring mechanisms available to licensees and the NRC, physical processes associated with radionuclide transport, and the hydrologic characteristics at typical spent fuel pool sites, the NRC concludes that the radiological impacts to groundwater quality resulting from a spent fuel pool leak during short-term timeframe would be SMALL.

E.2.2.2 Surface Water

Spent fuel pool leaks can result in discharges of radionuclides to offsite surface waters. The concentrations of radionuclides in offsite surface waters will depend on the rate of release from the spent fuel pool, the direction and rate of groundwater flow, the distance to nearby offsite surface waters toward which groundwater flows, the velocity or transport rates of radionuclides through the subsurface, and radioactive decay rates. For a given rate of release, the concentrations of radionuclides and, consequently, the presence of radionuclides in surface water would be dependent on the duration of the spent fuel pool leak.

However, because surface water bodies in the vicinity of nuclear power plants (e.g., oceans, lakes, rivers) are large enough to meet reactor cooling requirements, a large volume of surface water is usually available, which would dilute any groundwater contaminants that flow into them. This dilution ensures that radionuclides present in groundwater with concentrations that might exceed the Maximum Contaminant Level for that radionuclide would be diluted well below EPA safe drinking-water limits.

To illustrate the low releases that would be associated with leaked spent fuel pool water, the NRC estimated the annual discharge rate associated with a leakage of 380 L/d [100 gpd] of radionuclides in spent fuel pool water at concentrations shown in Table E-1. The NRC's estimate takes into account groundwater transport considerations, including radioactive decay, and conservatively assumes steady-state conditions (i.e., constant flow over time). Based on these assumptions, the annual quantity of radionuclides, expressed as *S* that could reach a certain distance from the spent fuel pool can be expressed as a derivation of the decay equation:

$$S = S_o \mathrm{e}^{-\lambda t}$$

where S = the annual discharge of radionuclides to nearby surface waters (Ci/yr)
S_o = the annual leak of radionuclides from the spent fuel pool (Ci/yr)
λ = $\ln(2)/t_{1/2}$ = the radioactive decay constant for the radionuclide (yr^{-1})
t = the travel time for radionuclides to reach nearby surface waters (yr).

The variable t can be expressed as a ratio of distance traveled to a radionuclide's retard velocity:

$$t = \frac{xR}{u}$$

where x = the distance between the spent fuel pool leak and the nearby surface water (m)
R = the retardation factor (dimensionless)
u = the groundwater flow velocity (m/yr).

Therefore, the annual quantity of radionuclides that could reach a certain distance from the spent fuel pool can be expressed as

$$S = S_o e^{-\frac{\lambda x R}{u}}$$

The retardation factor, *R*, is expressed as (NRC 1983):

$$R = \left(1 + \frac{\rho_b}{n_e}\right) K_d$$

where ρ_b = the average soil density (g/cm^3)
n_e = the effective porosity of the soil (dimensionless)
K_d = the radionuclide distribution coefficient (L/kg).

The value of the radionuclide distribution coefficient (K_d), which describes the tendency of a radionuclide in groundwater to sorb to subsurface soil and rock, is higher for radionuclides that are strongly sorbed to soil and rock, and lower for radionuclides that tend to remain dissolved in

groundwater. Therefore, the higher the K_d value of a radionuclide or other contaminant, the slower it will migrate or be transported through soil and groundwater and into surface water. Using the leak rates calculated with the values from Table E-1, the expressions above, radioactive decay constants for each radionuclide, and reasonably conservative assumptions for the other parameters, it is possible to estimate the discharge of radionuclides from a spent fuel pool leak to nearby surface waters. A conservative assumption for groundwater flow velocity, u, is 30 cm/d (1 ft/d) or about 100 m/yr (330 ft/yr). Assuming the distance, x, from a spent fuel pool to nearby surface water is as little as 100 m (330 ft), the travel time for groundwater from the point of release at the spent fuel pool to the nearby surface water could be as little as about 1 year. A nominal bulk soil density, ρ_b, is about 1.6 g/cm^3 and an average value of effective soil porosity, n_e, is 0.3 (Freeze and Cherry 1979). Values of K_d for isotopes of cesium are available in Table 4.6 of NUREG/CR–3332, *Radiological Assessment: A Textbook on Environmental Dose Analysis* (Till and Meyer 1983). A low value of K_d for cesium in soil is about 189 L/kg.

Using these conservative assumptions, radioactive cesium isotopes would not reach nearby surface water before either decaying in place a short distance from the spent fuel pool or being removed during decommissioning activities. Using published values of K_d for cobalt (K_d = 60) (Sheppard 1990) and cobalt isotope half-lives ($t_{1/2}$) from Table E-1, cobalt isotopes would remain near the leak source and decay or be removed during decommissioning activities well before reaching nearby surface waters. Strontium-90 has a sufficiently long half-life of 28.8 years, and a low enough K_d in some soils (e.g., 15 L/kg in sand)(Sheppard 1990) that it could reach nearby surface waters. Although tritium has a relatively short half-life (12.3 years), it moves at the same rate as water through soil and groundwater strata (i.e., effective K_d = 0).

Therefore, the only radionuclides that could be expected to reach nearby surface water through groundwater are tritium and strontium-90. The tritium leakage values calculated using the methodology described above are compared in Table E-2 below to the annual liquid effluent discharges in 2008 for boiling water reactors and pressurized water reactors (NRC 2010a). Strontium-90 leakage values are compared to detectable strontium-90 releases from boiling water reactors and pressurized water reactors from 2005 through 2009, which are taken from individual plant Radioactive Effluent and Environmental Reports on NRC's website (see http://www.nrc.gov/reactors/operating/ops-experience/tritium/plant-info.html).

As shown in Table E-2, even in the unlikely event that undetected spent fuel pool leakage flowed continuously (24 hours per day, 365 days per year) to local surface waters, the quantities of radioactive material discharged to nearby surface waters would be comparable to values associated with permitted, treated effluent discharges from operating nuclear power plants.

Based on these considerations, the NRC concludes that the impact of spent fuel pool leaks on surface water would be SMALL.

Table E-2. Comparison of Tritium and Strontium-90 Released From a Spent Fuel Pool Leak to Radionuclides Discharged During Normal Operations

Radionuclide	Spent Fuel Pool Leakage (Ci/yr)	Boiling Water Reactor Effluent Range (Ci/yr)	Pressurized Water Reactor Effluent Range (Ci/yr)
H-3	3.8	0.00113 to 127	159 to 1,660
Sr-90[(a)]	8.3×10^{-5}	5.4×10^{-7} to 2.0×10^{-4}	7.5×10^{-7} to 1.6×10^{-3}

(a) For calendar years 2005 through 2009.

E.2.2.3 Soils

Spent fuel pool leaks could result in localized radiological contamination of offsite soils. The degree of offsite soil contamination would depend on the rate of release from the spent fuel pool, the direction of groundwater flow, the distance to offsite locations, the velocity or transport rates of radionuclides through soils, and radioactive decay rates. For a given rate of release, the soil radionuclide concentrations and mass of soil contaminated would be dependent on the duration of the spent fuel pool leak.

As stated above in Section E.2.2.1, contamination in groundwater is likely to be observed as part of a licensee's radiological environmental monitoring program prior to the contamination plume reaching the offsite environment, and corrective action would be taken consistent with Federal and State requirements. In addition, most radionuclides move at a much slower rate and are much more likely to be adsorbed to the concrete structures of the spent fuel building and the soil surrounding the leak location. As a result, most soil contamination from spent fuel pool leaks would be expected to remain onsite and, therefore, offsite soil contamination is unlikely to occur. Therefore, the NRC concludes that the environmental impact of spent fuel pool leaks to offsite soils would be SMALL.

E.2.2.4 Public Health

For the purposes of assessing radiological impacts, environmental impacts are considered to be SMALL if releases and doses do not exceed permissible levels set by the NRC and the EPA. Therefore, the impact to public health would be SMALL if the spent fuel pool leakage was detected and remediated before regulatory limits for drinking water (e.g., EPA Maximum Contaminant Level) or effluent discharges (NRC dose standards in 10 CFR Part 50, Appendix I) were exceeded. As described above, should a pool leak continue undetected for a long period, a highly localized exceedance of groundwater protection standards could occur. Public health concerns related to groundwater contamination would be limited to private wells nearest the site. Surface water and regional groundwater resources will not be significantly affected for the reasons discussed in Sections E.2.2.1 and E.2.2.2. In the event of uncontrolled and undetected discharges associated with long-term spent fuel pool leaks to nearby surface waters, the annual

discharge would be comparable to normal discharges associated with operating reactors, and would likely remain below the standards set by the NRC for normal operational effluents in 10 CFR Part 50, Appendix I. In the unlikely event that a pool leak remained undetected for a long period, public health regulatory limits (e.g., EPA drinking-water standards) could be exceeded, and, therefore, the NRC has determined that public health impacts could be noticeable, but not destabilizing in these circumstances. However, as discussed in Section E.2.2.1, it is unlikely that a leak of sufficient quantity and duration could occur without detection or that such a leak would not be impeded by the physical processes associated with radionuclide transport and hydrologic characteristics typical of spent fuel pool locations. Therefore, based on the low probability of a leak affecting offsite groundwater sources, the NRC concludes that impacts to public health resulting from a spent fuel pool leak during the short-term timeframe would be SMALL.

E.2.2.5 Summary

Table E-3 summarizes the NRC impact determinations for the resource areas discussed in Sections E.2.2.1 through E.2.2.4.

Table E-3. Summary of Environmental Impacts of Spent Fuel Pool Leakage

Resource Area	Impact Determination
Groundwater	SMALL
Surface Water	SMALL
Soils	SMALL
Public Health	SMALL

E.3 Historical Data on Spent Fuel Pool Leakage

Although the evaluation of spent fuel pool leaks in Section E.2 focuses on the potential impacts of leaks during short-term storage timeframe, it is helpful to review the historical occurrences of spent fuel pool leaks. A review of past spent fuel pool leaks helps to establish a representative baseline for the analysis of future impacts and provides context to those impacts. As presented in Table E-4, the NRC has identified seven sites where contamination from the spent fuel pool has migrated outside of the spent fuel pool building. Two of the sites identified (Hatch and Turkey Point) were associated with operational issues that resulted in short-term, high-volume releases of water from the spent fuel pool. In both of these cases, the release was immediately identified by the licensee and appropriate action was taken to minimize impacts on the environment. Five of the sites (Indian Point, Palo Verde, Salem, Seabrook, and Watts Bar) were associated with a spent fuel pool leak that went undetected for some period of time. In addition to these seven sites, two additional sites (San Onofre and Yankee Rowe) were identified in which the spent fuel pool was implicated as a potential source of onsite contamination. The NRC has also identified at least seven sites where leakage from the spent fuel pool was contained within the leakage-collection system, or within the spent fuel pool

building. Spent fuel pool leakage at boiling water reactor plants has been identified primarily through leak-detection systems. Spent fuel pool leakage at pressurized water reactor plants has been detected in the leak-chase system (channels installed behind spent fuel pool liner welds); as seepage associated with concrete cracks; by the presence of white deposits on structures (boric acid precipitate); by the presence of moisture in the seismic gap between the fuel-handling building and auxiliary building; and by the presence of abnormally high levels of tritium in groundwater (i.e., above normal background levels of approximately 200 pCi/L and by contamination of protective clothing) (Copinger et al. 2012).

At several of the sites listed in Table E-4, namely Indian Point (Units 1 and 2), Palo Verde (Unit 1), Salem (Units 1 and 2), Seabrook, and Watts Bar, spent fuel pool leakage has resulted in inadvertent liquid radioactive releases to the environment. Releases that were known to have occurred to the environment from spent fuel pool leakage prior to 2006 were examined by the NRC Liquid Radioactive Release Lessons Learned Task Force as part of its review of historical information on abnormal, unplanned, unmonitored releases of radioactive liquids into the environment from nuclear power plants (NRC 2006b). The NRC Groundwater Task Force (NRC 2010b) reviewed data on releases to groundwater that occurred subsequent to the publication of the Lessons Learned Task Force report. A more recent study identified other nuclear power facilities that have experienced spent fuel pool leakage, including Crystal River Unit 3, Davis-Besse Unit 1, Diablo Canyon Units 1 and 2, Duane Arnold, Hope Creek, and Kewaunee (Copinger et al. 2012). For those facilities, with the exception of Kewaunee, the leakage was contained within the spent fuel pool leakage-collection system. For Kewaunee, the leakage was contained in the waste drumming room adjacent to the spent fuel pool (Copinger et al. 2012).

Table E-5 lists the maximum contamination detected onsite and at offsite locations from the spent fuel pool leakage events. None of the spent fuel pool leakage events listed in Table E-5 are known to have resulted in contamination of drinking water.

NRC Groundwater Task Forces

In 2006, the NRC chartered an in-house Lessons Learned Task Force to conduct a systematic lessons-learned review of unplanned, unmonitored releases of radioactive liquids into the environment from nuclear plants, which included inadvertent releases from spent fuel pools as well as other plant systems. The Lessons Learned Task Force reviewed industry experience, associated public health impacts (if any) of the radioactive liquid releases into the environment, the NRC regulatory framework, related NRC inspection and enforcement programs, industry reporting requirements, past industry actions following significant inadvertent releases,

Table E-4. Occurrence of Spent Fuel Pool Leakage at U.S. Nuclear Power Plants

Site	Date(s) of Leak Discovery	Detection Method	Radioactive Liquid Released to Environment?	Radionuclides Detected
		Operational Releases		
Hatch	December 1986	Operator observation	Yes	Tritium and mixed fission products
Turkey Point	August 1988	Operator observation	Yes	Tritium, cesium-137, and cobalt-60
		Confirmed Spent Fuel Pool Leaks		
Indian Point (Units 1 and 2)	August 2005; Unit 1 leakage predates August 2005	Discovered during excavation	Yes	Tritium, nickel-63, cesium-137, strontium-90, and cobalt-60
Palo Verde (Unit 1)	July 2005	Routine surveillance	Yes	Tritium, cobalt-60, antimony-125, and cesium-137
Salem (Unit 1)	September 2002	Personnel monitoring	Yes	Tritium
Seabrook	June 1999	Environmental monitoring	Yes	Tritium
Watts Bar (Unit 1)	August 2002	Environmental monitoring	Yes	Tritium
Crystal River (Unit 3)	2009	Routine surveillance	No[a]	—
Davis-Besse	2000	Routine surveillance	No[a]	—
Diablo Canyon (Units 1 and 2)	2010	Routine surveillance	No[a]	—
Duane Arnold	1994	Routine surveillance	No[a]	—
Hope Creek	2009	Routine surveillance	No[a]	—
Kewaunee	2007	Routine surveillance	No[b]	—
Salem (Unit 2)	2010	Routine surveillance	No[a]	—
		Potential Spent Fuel Pool Leaks		
San Onofre (Unit 1)	1986	[c]	Yes	Tritium, cesium-137
Yankee Rowe	1979/1999	[d]	Yes[d]	Tritium

Sources: SCE 1995; ANP 2003; FPL 2006; NRC 2006b; YAEC 2006; NRC 2010b; NRC 2010c; Copinger et al. 2012

(a) Leaked spent fuel pool water was contained within spent fuel pool leakage-collection system.

(b) White deposits, possibly boric acid, observed on the wall and ceiling of the waste drumming room adjacent to the spent fuel pool.

(c) Contaminated groundwater was discovered during the decommissioning of San Onofre Unit 1. The source of the contaminated water was not clearly identified, but was suspected to have originated from any of three sources, one of which was leakage from the spent fuel pool that occurred from 1986 to1989 (NRC 2010c). Environmental monitoring performed by the licensee subsequent to the leak did not identify radionuclides in the environment attributable to San Onofre (SCE 1995).

(d) The licensee suspects that the spent fuel pool leaked periodically until the installation of a liner in 1979; however, the amount of leakage was not discernable based on water level changes and makeup rates (YAEC 2006). The licensee identified additional leakage thought to be attributable to the spent fuel pool in 1999. Based on its evaluation, the licensee estimated that the leak rate was approximately 10 gal/yr (38 L/yr)(ANP 2003). The most significant source of onsite groundwater contamination is suspected to have resulted from a leak in the ion-exchange pit that released approximately 2 million gallons (7.6 million liters) of contaminated water through a construction joint at the common wall between the spent fuel pool and ion-exchange pit (YAEC 2006).

international perspectives (principally from the Canadian experiences with tritium releases), and NRC communications with members of the public. In its final report (NRC 2006b), the Lessons Learned Task Force made 26 recommendations that generally addressed enhanced regulations or regulatory guidance for unplanned, unmonitored releases; additional reviews in the areas of decommissioning funding and license renewal; and enhanced public communications.

The most significant conclusion of the Lessons Learned Task Force was with respect to public health impacts. Although a number of industry events has caused radioactive liquid releases to the environment in an unplanned and unmonitored manner, based on the available data, the task force did not find any instance in which the radioactive liquid releases affected the health of the public (NRC 2006b).

Table E-5. Dose from Inadvertent Releases of Radioactive Liquids from Nuclear Power Plant Spent Fuel Pools

Site	Maximum Contamination (pCi/L) Detected Within the Site Boundary	Maximum Water Contamination (pCi/L) at Offsite Locations	Receptor and Pathways	Yearly Dose (mrem)
Hatch	[(a)]	None detected at offsite water sources; long-term monitoring in place	NA	NA
Indian Point	200,000 for tritium 100 for nickel-63 50 for strontium-90	Approximation made in dose calculations	MEI[(b)]	0.0021[(c)]
Salem	15,000,000 for tritium[(d)]	None detected	NA	NA
Seabrook	750,000 for tritium	Groundwater plume has not migrated offsite	NA	NA
Turkey Point	[(e)]	None detected	NA	NA
Watts Bar	550,000 for tritium	Groundwater plume has not migrated offsite	NA	NA

Source: Entergy 2006; FPL 2006; NRC 2013b; NRC 2013c

(a) Approximately 124,000 gal of liquid containing 0.2 Ci of tritium and 0.373 Ci of mixed fission products were released to a swamp which is located in the owner-controlled area. No public dose is calculated for releases to owner-controlled area.

(b) MEI = Maximally exposed individual: A hypothetical individual who, because of proximity, activities, or living habits, could potentially receive the maximum possible dose of radiation or of a hazardous chemical from a given event or process.

(c) Total body dose was calculated based on the assumption that all onsite groundwater discharged directly to the Hudson River (Entergy 2006). The calculated dose represents 0.0021% of the NRC's radiation dose limit to individual members of the public, as defined in 10 CFR Part 20.

(d) Maximum tritium level in sample of groundwater near the seismic gap; extensive groundwater remediation program in place.

(e) Approximately 6 to 7 gal of liquid (23 to 26 L) containing 2.5 x 10-3 μCi/cm^3 of cesium-137, 2.5 x 10-4 μCi/cm^3 of tritium, and 2.2 x 10-2 μCi/cm^3 of cobalt-60 were released to storm drains. Leakage discharged into the intake of the plant cooling canal, which is a large, closed loop onsite flow path (55 FR 38474).

NA = Not applicable because water contamination was not detected at offsite locations.

In 2010, following further inadvertent, abnormal releases of radionuclides to the environment from nuclear power plant operations, the NRC established a second task force, referred to as the NRC Groundwater Task Force. The Groundwater Task Force reevaluated the recommendations in the Lessons Learned Task Force final report; reviewed NRC staff actions to address the issue of leaks from buried piping at nuclear power plants; and reviewed the actions taken in response to more recent releases of tritium from systems other than those associated with spent fuel pools into groundwater at nuclear facilities. The scope of the Groundwater Task Force work included industry experience; health impacts; the regulatory framework; NRC inspections and analyses; enforcement and reporting aspects; industry actions; international perspectives; and communications with external stakeholders. After completing its review, the Groundwater Task Force determined that the NRC is accomplishing its stated mission of protecting public health, safety, and the environment through its response to groundwater leaks and spills.

E.4 References

10 CFR Part 20. *Code of Federal Regulations*, Title 10, *Energy*, Part 20, "Standards for Protection Against Radiation." Washington, D.C.

10 CFR Part 50. *Code of Federal Regulations*, Title 10, *Energy*, Part 50, "Domestic Licensing of Production and Utilization Facilities." Washington, D.C.

10 CFR Part 100. *Code of Federal Regulations*, Title 10, *Energy*, Part 100, "Reactor Site Criteria." Washington, D.C.

55 FR 38474. September 18, 1990. "Waste Confidence Decision Review," *Federal Register*, U.S. Nuclear Regulatory Commission, Washington, D.C.

76 FR 35512. June 17, 2011. "Decommissioning Planning," *Federal Register,* U.S. Nuclear Regulatory Commission, Washington, D.C.

ANP (Framatome ANP). 2003. *Site Ground Water Data Collection for YNPS Decommissioning*. DESD-YR-02-001, Revision 1. Accession No. ML031470580.

ANSI/ANS (American National Standards Institute/American Nuclear Society). 2010. *Draft Evaluation of Subsurface Radionuclide Transport at Commercial Nuclear Power Plants.* ANSI/ANS–2.17–2010, La Grange Park, Illinois. Accession No. ML101310455.

Copinger, D.A., C.B. Oland, and D.J. Naus. 2012. *Summary of Aging Effects and Their Management in Reactor Spent Fuel Pools, Refueling Cavities, Tori, and Safety-Related Concrete Structures*. NUREG/CR–7111, Oak Ridge National Laboratory, Oak Ridge, Tennessee. Accession No. ML12047A184.

DOE (U.S. Department of Energy). 2003. *National Report Joint Convention on the Safety of Spent Fuel Management and on the Safety of Radioactive Waste Management*. DOE/EM–0654, Washington, D.C. Available at http://energy.gov/sites/prod/files/1st%20US%20JC%20report.pdf.

Entergy (Entergy Nuclear Operations, Inc.). 2006. *2005 Annual Radioactive Effluent Release Report.* Buchanan, New York. Accession No. ML061240373.

Entergy (Entergy Nuclear Operations, Inc.). 2012. *Joint Motion for Approval of Settlement Agreement and Dismissal of Consolidated Contention Riverkeeper EC-3 and Clearwater EC-1 (Spent Fuel Pool Leaks)*. Washington, D.C. Accession No. ML12286A178.

EPA (U.S. Environmental Protection Agency). 1991. *Final Guidance on Emergency Authority Under Section 1431 of the Safe Drinking Water Act*. WSG 68, Washington, D.C. Available at http://www.epa.gov/safewater/wsg/wsg_68.pdf.

EPA (U.S. Environmental Protection Agency). 1999. *Use of Monitored Natural Attenuation at Superfund, RCRA Corrective Action, and Underground Storage Tank Sites.* U.S. Environmental Protection Agency, Office of Solid Waste and Emergency Response Directive 9200.4-17P, Washington, D.C. Available at http://www.epa.gov/oust/directiv/d9200417.pdf.

EPRI (Electric Power Research Institute). 2008. *Groundwater Protection Guidelines for Nuclear Power Plants*. 1016099, Palo Alto, California. Accession No. ML091170595.

Ferry, L., R. Ferry, W. Isherwood, R. Woodward, T. Carlsen, Z. Demir, R. Qadir, and M. Dresen. 1999. *Final Site-Wide Feasibility Study for Lawrence Livermore National Laboratory Site 300*. UCRL–AR–132609, Lawrence Livermore National Laboratory, Livermore, California. Available at http://www-erd.llnl.gov/library/AR-132609.html.

FPL (Florida Power & Light). 2006. *Groundwater Protection—Data Collection Questionnaire*. Juno Beach, Florida. Accession No. ML062280570.

Freeze, R.A. and J.A. Cherry. 1979. "Groundwater." Prentice-Hall, Inc., Englewood Cliffs, New Jersey.

GE (General Electric Company). 2004. *Morris Operation Consolidated Safety Analysis Report*. NEDO–21326D11, Morris, Illinois. Accession No. ML080220416.

Geniesse, D.J. and G.E. Stegen. 2009. *2009 Evaluation of Tritium Removal and Mitigation Technologies for Wastewater Treatment.* DOE/RL–2009–18, Richland, Washington. Available at http://www.osti.gov/scitech/servlets/purl/948439.

IAEA (International Atomic Energy Agency). 1999. *Technical Options for the Remediation of Contaminated Groundwater*. IAEA–TECDOC–1088, Vienna, Austria. Available at http://www-pub.iaea.org/MTCD/publications/PDF/te_1088_prn.pdf.

Johnson, A., Jr. 1977. *Behavior of Spent Nuclear Fuel in Water Pool Storage*. BNWL–2256, Battelle–Pacific Northwest Laboratories, Richland, Washington. Available at http://www.osti.gov/scitech/servlets/purl/7284014

NEI (Nuclear Energy Institute). 2007. *Industry Ground Water Protection Initiative—Final Guidance Document*. NEI 07–07, Washington, D.C. Accession No. ML072600295.

NRC (U.S. Nuclear Regulatory Commission). 1991a. *Offsite Dose Calculation Manual Guidance: Standard Radiological Effluent Controls for Pressurized Water Reactors.* Generic Letter 89–01, Supplement No. 1, NUREG–1301, Washington, D.C. Accession No. ML091050061.

NRC (U.S. Nuclear Regulatory Commission). 1991b. *Offsite Dose Calculation Manual Guidance: Standard Radiological Effluent Controls for Boiling Water Reactors.* NUREG–1302, Generic Letter 89–01, Supplement No. 1, Washington, D.C. Accession No. ML031290469.

NRC (U.S. Nuclear Regulatory Commission). 1997a. *Operating Experience Feedback Report: Assessment of Spent Fuel Cooling*. NUREG–1275, Volume 12, Washington, D.C. Accession No. ML010670175.

NRC (U.S. Nuclear Regulatory Commission). 1997b. *Generic Environmental Impact Statement in Support of Rulemaking on Radiological Criteria for License Termination of NRC-Licensed Nuclear Facilities*. NUREG–1496, Washington, D.C. Accession Nos. ML042310492, ML042320379, ML042330385.

NRC (U.S. Nuclear Regulatory Commission). 2002. *Final Generic Environmental Impact Statement on Decommissioning of Nuclear Facilities, Supplement 1 Regarding the Decommissioning of Nuclear Power Reactors, Final Report*. NUREG–0586, Volumes 1 and 2, Washington, D.C. Accession Nos. ML023470327, ML023500228.

NRC (U.S. Nuclear Regulatory Commission). 2004. *Spent Fuel Pool Leakage to Onsite Groundwater*. Information Notice 2004–05, Washington, D.C. Accession No. ML040580454.

NRC (U.S. Nuclear Regulatory Commission). 2006a. *Indian Point Nuclear Generating Unit 2 - NRC Special Inspection Report No. 05000247/2005011*. Washington D.C. Accession No. ML060750842.

NRC (U.S. Nuclear Regulatory Commission). 2006b. *Liquid Radioactive Release Lessons Learned Task Force Final Report*. Washington, D.C. Accession No. ML062650312.

NRC (U.S. Nuclear Regulatory Commission). 2008. *Minimization of Contamination and Radioactive Waste Generation: Life-Cycle Planning*. Regulatory Guide 4.21, Washington, D.C. Accession No. ML080500187.

NRC (U.S. Nuclear Regulatory Commission). 2009. *Measuring, Evaluating, and Reporting Radioactive Material in Liquid and Gaseous Effluents and Solid Waste*. Regulatory Guide 1.21, Revision 2, Washington, D.C. Accession No. ML091170109.

NRC (U.S. Nuclear Regulatory Commission). 2010a. *Radioactive Effluents from Nuclear Power Plants, Annual Report 2008*. Washington, D.C. Accession No. ML103620452.

NRC (U.S. Nuclear Regulatory Commission). 2010b. *Groundwater Task Force Final Report*. Washington, D.C. Accession No. ML101740509.

NRC (U.S. Nuclear Regulatory Commission). 2010c. *Response to Questions Concerning Spent Fuel Pool Leakage at the San Onofre Nuclear Generating Station, Unit 1*. Arlington, Texas. Accession No. ML101400386.

NRC (U.S. Nuclear Regulatory Commission). 2011a. Memorandum from R.L. Conaster to U.S. Shoop dated April 1, 2011, regarding "Summary of Results from Completion of NRC's Temporary Instruction on Groundwater Protection, TI–2515/173, "Industry Groundwater Protection Initiative." Washington, D.C. Accession No. ML11088A047.

NRC (U.S. Nuclear Regulatory Commission). 2011b. *Senior Management Review of Overall Regulatory Approach to Groundwater Protection*. SECY–11–0019, Washington, D.C. Accession No. ML12338A692.

NRC (U.S. Nuclear Regulatory Commission). 2012. *Decommissioning Planning During Operations*. Regulatory Guide 4.22, Washington, D.C. Accession No. ML12158A361.

NRC (U.S. Nuclear Regulatory Commission). 2013a. *2013–2014 Information Digest*. NUREG-1350, Volume 25, Washington, D.C. Accession No. ML13241A207.

NRC (U.S. Nuclear Regulatory Commission). 2013b. *Generic Environmental Impact Statement for License Renewal of Nuclear Plants*. NUREG–1437, Volume 1, Revision 1, Washington, D.C. Accession No. ML13107A023.

NRC (U.S. Nuclear Regulatory Commission). 2013c. *Final Environmental Statement: Related to the Operation of Watts Bar Nuclear Plant, Unit 2.* NUREG–0498, Supplement 2, Volume 1, Washington, D.C. Accession No. ML13144A092.

NRC (U.S. Nuclear Regulatory Commission). 2014. Memorandum from S.M. Gary to U.S. Shoop dated April 11, 2014, regarding "Roll-Up of Temporary Instruction (TI) 2515/185, "Follow-Up on the Industry's Ground Water Protection Initiative." Washington, D.C. Accession No. ML14086A644.

NYSDEC (New York State Department of Environmental Conservation). 2010. *Technical Guidance for Site Investigation and Remediation*. DER-10, Albany, New York. Available at: http://www.dec.ny.gov/docs/remediation_hudson_pdf/der10.pdf.

SCE (Southern California Edison Company). 1995. *SONGS Unit 1 Spent Fuel Pool Liner Plate Evaluation*. San Clemente, California. ADAMS Legacy Library Accession No. 9503200118.

Sheppard, M.I. and D.H. Thibault. 1990. "Default Soil Solid/Liquid Partition Coefficients, Kds, for Four Major Soil Types: A Compendium." *Health Physics* 59(4):471-482, Philadelphia, Pennsylvania.

Till, J.E. and H.R. Meyer, eds. 1983. *Radiological Assessment: A Textbook on Environmental Dose Analysis.* NUREG/CR–3332, Oak Ridge National Laboratory, Oak Ridge, Tennessee. Accession No. ML091770419.

YAEC (Yankee Atomic Electric Company). 2006. *Groundwater Monitoring Plan to Support Closure under the Massachusetts Contingency Plan*. Rowe, Massachusetts. Accession No. ML071670009.

Appendix F

Spent Fuel Pool Fires

Appendix F

Spent Fuel Pool Fires

This appendix examines the environmental impacts of a spent fuel pool fire during the short-term storage timeframe.[1] The environmental impacts of spent fuel pool fires described in this appendix support the U.S. Nuclear Regulatory Commission's (NRC's) generic determination of the environmental impacts of spent fuel pool fires and their risk, as described in Section 4.18.2.1 of this *Generic Environmental Impact Statement for Continued Storage of Spent Nuclear Fuel* (GEIS). The NRC has conducted extensive evaluations of the risk and impacts of spent fuel pool fires. While initial studies were concerned with spent fuel pool fire risk during the operating life of a reactor, a risk study completed in 2001 examined the risk of a spent fuel pool fire during the reactor decommissioning period (NRC 2001). The analysis in this appendix shows that the probability-weighted impacts, or risk, from a spent fuel pool fire for the short-term storage timeframe are SMALL because, while the consequences from a spent fuel pool fire could be significant and destabilizing, the probability of such an event is extremely remote.

F.1 Environmental Impacts of Spent Fuel Pool Fires

In the event of an accident that leads to a loss of water in a spent fuel pool (via rapid drainage or extended boiling), without successful efforts to replenish the lost water, spent fuel temperatures could increase significantly. If cooling of the spent fuel were not reestablished, the fuel could heat up to temperatures on the order of 1,000°C (1,832°F). At this temperature, the spent fuel's zirconium cladding would begin to react with air in a highly exothermic chemical reaction called a runaway zirconium oxidation reaction or autocatalytic ignition. This accident scenario is often referred to as a "spent fuel pool zirconium fire." Radioactive aerosols and vapors released from the damaged spent fuel could be carried throughout the spent fuel pool building and into the surrounding environment. This release could lead to exposures of the surrounding population and contamination of property (e.g., land or structures) in the vicinity of the site. Under appropriate atmospheric conditions, the radioactive aerosols from very large releases could be transported long distances before they were deposited or dispersed.

[1] As discussed in Section 1.8, the NRC assumes that all spent nuclear fuel (spent fuel) is removed from the pools and placed in dry-cask storage by the end of the short-term storage timeframe. This appendix, therefore, does not analyze the impacts of a spent fuel pool fire after the short-term storage timeframe because a spent fuel pool will not be used to store spent fuel after that time.

Under certain conditions, the high temperature runaway zirconium oxidation reaction occurring in one part of the pool could also spread to other spent fuel in the pool. The proximity of fuel assemblies to one another, combined with the effects of radiative heat transfer when these assemblies are at very high temperatures, could allow the runaway oxidation reaction to spread from spent fuel with high decay heat to spent fuel with lower decay heat that would otherwise not have begun burning.

A spent fuel pool accident could develop into a spent fuel pool fire in a number of ways. As the NRC first determined in 1975, spent fuel pool accidents can arise from either the loss of spent fuel pool cooling, drainage of the spent fuel pool, or the dropping of heavy items into the spent fuel pool (NRC 1975). Since that time, the NRC has refined its analysis and has looked at various ways that these events could occur. For example, in 1989 the NRC conducted a study that assessed various accident sequences including spent fuel pool failure due to wind-driven missiles, aircraft crashes, heavy-load drop, seal failure, inadvertent draining, loss-of-cooling, and seismic events (NRC 1989).

The NRC has also assessed the probability of spent fuel pool accidents. The probability of spent fuel pool accidents is the sum of the frequency of those accident sequences that lead to radiological release, considering both the frequency of the different types of initiating events and the probability of a release given that a particular initiating event has occurred. In its earliest study, the NRC determined that the probability of the drainage of the spent fuel pool was much less than a loss-of-cooling event for the reactor because accidental drainage of the spent fuel pool requires multiple simultaneous failures (NRC 1975). Further, in 1989 the NRC quantified the probabilities of various accident initiating events and assessed the health and economic consequences of a spent fuel pool accident (NRC 1989). The potential consequences of a spent fuel pool fire can be considered in light of these probabilities and expressed in several different measures of impacts (e.g., collective radiation dose to the public and economic consequences).

The NRC chose to develop its generic analysis for spent fuel pool fires by selecting NUREG–1738, *Technical Study of Spent Nuclear Fuel Pool Accident Risk at Decommissioning Nuclear Power Plants* (NRC 2001) as the principle basis for its quantitative estimates of the impacts, and then discuss any significant uncertainties and how those uncertainties would affect those estimates. The NRC chose NUREG–1738 for this purpose because the following features are particularly relevant to the spent fuel pool severe accident analysis of the GEIS:

- NUREG–1738 was developed for reactors during decommissioning rather than operating reactors, and thus analyzes the earliest and highest-risk period of the short-term storage timeframe considered in the GEIS.
- NUREG–1738 analyzes a wide variety of initiating events.

- NUREG–1738 was developed as a generic analysis by, for example, considering geographic variation in seismic hazard (see Figure 3.2 of NUREG–1738) and by performing sensitivity studies to examine the effects of variation in site-specific factors such as population density.
- NUREG–1738 references preceding studies of spent fuel pool risks and compares the results, thereby serving as a valuable update to earlier spent fuel pool risk studies.
- NUREG–1738 has received extensive peer technical review and public comment.
- NUREG–1738 provides quantitative estimates at a reference reactor site (i.e., Surry Power Station [Surry]) for which information on the impacts of potential reactor accidents is also available, allowing a comparison of potential impacts of both pool and reactor accidents.

As detailed in the following sections, the impacts from a spent fuel pool fire are expressed in terms of both the consequence that would occur if the accident occurred and as a probability-weighted consequence. The probability-weighted consequence, also known as risk, is a quantitative measure of the severity of the accident that accounts for the likelihood of its occurrence. The probability-weighted consequence is calculated by multiplying a consequence, such as cumulative dose, cost to the local economy, or area of land contamination, by the probability of the accident's occurrence. In the following analyses, the NRC first provides a discussion of the consequences of a spent fuel pool fire. The NRC then determines the risk of a spent fuel pool fire by looking at the probability of this type of event during the short-term storage timeframe and multiplying the probability by the consequences. The probability-weighted consequences provide the expected environmental impacts of a spent fuel pool fire, and represent the NRC's best forward-looking judgment concerning spent fuel pool fire risk during the short-term storage timeframe.

As discussed in more detail below, the NRC confirmed that the overall risks associated with these types of accidents remain low because the spent fuel pool loss-of-cooling event probability is low (NRC 2001). As discussed in more detail in Section F.1.2, since the NRC completed NUREG–1738 in 2001, the NRC has continued to implement regulations and orders that further reduce the likelihood of a spent fuel pool fire. These additional reductions in the likelihood of a spent fuel pool fire mean that the risks are lower now than those NRC reported in NUREG–1738.

Finally, as part of an ongoing examination of the risk of spent fuel pool accidents, the NRC performed a study of the probability and consequences of a beyond-design-basis earthquake affecting the spent fuel pool for a U.S. boiling water reactor. That study, documented in SECY–13–0112, *Consequence Study of a Beyond-Design-Basis Earthquake Affecting the Spent Fuel Pool for a U.S. Mark I Boiling Water Reactor* (NRC 2013a), used updated methods to look at the probability and consequences of a spent fuel pool loss-of-cooling event for both a high-density and a low- density loading spent fuel storage configuration. Based in part on that study, the NRC performed an analysis of spent fuel pool fire risk to determine whether the NRC should

conduct additional research on the potential need to require reactor licensees to accelerate transfer of older, cooler spent fuel from the spent fuel pool to dry cask storage. The results of this analysis were documented in COMSECY–13–0030 (NRC 2013a). The results in SECY–13–0112 and COMSECY–13–0030 support the NRC's conclusion that, while the consequences from a spent fuel pool fire could be significant and destabilizing, the probability of a spent fuel pool fire is extremely remote. Further, the NRC reviewed the analyses in SECY-13-0112 and COMSECY–13–0030 and determined that neither would be an appropriate technical basis for the generic spent fuel pool fire consequence analysis in the GEIS. SECY–13–0112 lacked features comparable to NUREG–1738 that would support a generic analysis of continued storage, while COMSECY–13–0030 was drafted to satisfy a limited purpose, did not contain a NEPA analysis, and was not intended to satisfy the NRC's NEPA obligation. While important information has been garnered from those analyses, the NRC continues to believe that the analysis in NUREG–1738 is the appropriate technical basis from which to evaluate the impacts from a spent fuel pool fire during the short-term timeframe because of the factors described earlier in this section.

F.1.1 Consequences of a Spent Fuel Pool Fire

The release of radionuclides into the environment resulting from a spent fuel pool fire can lead to severe consequences, both in terms of direct human health impacts (e.g., early fatalities or latent cancer fatalities) and economic damages arising from the actions taken to avoid human exposures (e.g., evacuation and relocation costs, costs for cleanup of contaminated land, and the loss of economic value associated with land that cannot be used following a severe accident). These consequences do not consider the probability that an accident will occur. Possible initiating events and the probability that these events could occur are discussed in Section F.1.2. The following discussion and Table F-1 examine the consequences of a spent fuel pool fire.

In NUREG–1738 and Table F-1, source terms for high ruthenium (Ru) and low Ru are expressed as ranges. For example, the total collective dose for the high Ru source term ranges from 1.34×10^5 to 2.37×10^5 person-Sv (1.34×10^7 to 2.37×10^7 person-rem).[3] The ranges in Table F-1 are mean values of consequences of a spent fuel pool fire in which the NRC assumed a late evacuation of 95 percent of the population inside the 16-km (10-mi) emergency planning zone around Surry. The late evacuation assumption means that evacuation is started after the release. The low value corresponds to a fire that occurs 10 years after shutdown, at which time

[3] A person-Sievert (person-Sv) is a unit of collective dose. Collective dose is the sum of individual radiation doses received by a population. The incidence of health effects will vary from no observable health effects in large numbers of exposed individuals that receive low doses to observable health effects in small numbers of exposed individuals that receive large doses. Population health effects from spent fuel fires, including early fatalities and latent cancer fatalities, are summarized in Table F-1.

radioactive decay has reduced the amount of radioactive material that could be released. The high value corresponds to a fire that occurs within 30 days after shutdown.

Table F-1. Spent Fuel Pool Accident Probability and Consequences[a]

	Accident Frequency (per year)[b]	Individual Risk per Event: Early Fatality (1 mi)[c]	Individual Risk per Event: Latent Fatality (10 mi)[c]	Total person-Sv per Event	Collective Early Fatality per Event (10 mi)[c]	Latent Fatality[d] (0–500 mi)	Total Onsite and Offsite Economic (million $ per event)
NUREG–1738 (high Ru)	5.8×10^{-7}[e] to 2.4×10^{-6}[f]	4.68×10^{-3} to 4.43×10^{-2}	6.39×10^{-2} to 8.49×10^{-2}	1.34×10^{5} to 2.37×10^{5} (50 mi)[c]	<1 (0.360) to 191	-	-
NUREG–1738 (low Ru)	5.8×10^{-7}[e] to 2.4×10^{-6}[f]	1.63×10^{-3} to 1.27×10^{-2}	1.29×10^{-2} to 1.88×10^{-2}	4.72×10^{4} to 5.58×10^{4} (50 mi)[c]	<1 to 2	20,000–27,000	-
NUREG–1353	2.0×10^{-6}	-	-	2.6×10^{5} (50 mi)[g]	-		55,700[h,i]
NUREG/BR–0184	-	-	-	2.6×10^{5} (50 mi)[j]	-		57,800[h,k]

(a) All values are approximate.
(b) A value of 5.8×10^{-7} is scientific notation for a value that can also be expressed as 0.00000058. This value means that the probability of the accident occurring in any year is one chance in 1,700,000 (or one chance in 1/0.00000058).
(c) Consequence values were obtained from NUREG–1738 (NRC 2001, Tables 2 and 3 of Appendix 4B). [Note: Similar values appear in NUREG–1738 (NRC 2001, Tables 3.7-1 and 3.7-2), but were incorrectly reporting values from Appendix 4B.]
(d) Consequence values were obtained from NUREG–1738 (NRC 2001, Appendix 4) and reflect a range of results from the seven cases evaluated.
(e) Electric Power Research Institute data from NUREG–1738 (NRC 2001).
(f) Lawrence Livermore National Laboratory data in NUREG–1738 (NRC 2001).
(g) Case 2 values were obtained from NUREG–1353 (NRC 1989, Table 4.8.3). Case 2 assumed the entire spent fuel pool inventory was released.
(h) Values are based on impacts within 50 mi and are adjusted to 2010 dollars using the Consumer Price Index Inflation Calculator.
(i) Values were obtained from NUREG–1353 (30,200 Million $ in 1988 dollars; excludes replacement power costs) (NRC 1989, Tables 5.1.1 and 5.1.2).
(j) Values were obtained from NUREG/BR–0184 (NRC 1997, Table C.101).
(k) Values were obtained from NUREG/BR–0184 (26,400 Million $ in 1983 dollars; excludes replacement power costs) (NRC 1997, Table C.95 and C.101).

Table F-1 shows that the most severe spent fuel pool fire consequences would occur from a fire starting within 30 days after a final reactor shutdown in conjunction with a late or delayed evacuation of the affected area. The late evacuation would result in consequences more severe than those for an early evacuation because a late evacuation means that people will evacuate after the release of radioactive material. Further, the values shown in Table F-1 are conditional consequences, based on an assumption that a severe accident occurs without consideration of the remote probability of an accident. Probability-weighted consequences are discussed in Section F.1.2.

As discussed below, the assumptions described above are conservative assumptions of the consequences of the spent fuel pool fire. These conservative assumptions further reduce the

likelihood that the actual consequences would be as high as indicated in Table F-1. For example, the low Ru results from NUREG–1738 more realistically represent the anticipated consequences of even a high-volatility Ru spent fuel pool fire sequence. The 95 percent evacuation estimate is less than the NRC's best estimate of actual evacuation of 99.5 percent of the populace from the 16-km (10-mi) emergency planning zone, which was used by the NRC in its 2012 *State-of-the-Art Reactor Consequence Analyses Report* (NRC 1990, 2012a). However, in NUREG–1738 the NRC used a value of 95 percent in sensitivity studies to address concerns that the fraction of the public that does not evacuate could be higher. "Late evacuation" is a reasonably conservative assumption for decay times of less than about 2 years, for which the time-to-release could be less than 10 hours. However, the time-to-release (following the initiating event) will be longer than 10 hours after the spent fuel has cooled at least 2 years, and early evacuation, in which evacuation is completed before the release begins, would be increasingly more likely as the decay time increases. The more recent analyses (i.e., SECY–13–0112) suggest that, even for accidents occurring within a few months of final shutdown and assuming mitigation measures are unsuccessful, releases could start anywhere from eight hours to several days after the event. Early evacuation results in lower public doses because more people will evacuate before release occurs. Finally, the main contributors to the likelihood of uncovering the spent fuel are seismic events and cask drop. These events are no more or less likely to occur in any particular time interval during continued storage. Therefore, the probability of these initiating events occurring within the first 30 days after shutdown is an order of magnitude less than the per year probability during the 60-year short-term storage timeframe.

The low Ru and high Ru values shown in Table F-1 refer to two different source terms used in NUREG–1738 (NRC 2001). The low Ru source term is based on release fractions for chemical element groups that are discussed in NUREG–1465, *Accident Source Terms for Light-Water Nuclear Power Plants* (NRC 1995). Use of the NUREG–1465 source term means that the consequence estimates in the GEIS are based on a 75 percent release of radioiodine and radiocesium, the two radioisotope groups that contribute the most to offsite consequences. In addition, NUREG–1738 considered uncertainties associated with the Ru group and fuel fines component of the NUREG–1465 release fractions. The fuel fines component of the source term, comprised of small particles of spent fuel, is represented by the element groups for cerium and lanthanum. To conservatively address potential uncertainties in the source term, NUREG–1738 computed consequences for a modified source term that assumed a 75 percent release fraction for ruthenium and a 3.5 percent release fraction for lanthanum and cerium, referred to as the "high Ru source term." The higher release fraction for Ru in the high Ru source term is the same fraction as those used for volatile fission products like isotopes of iodine and cesium. As stated in NUREG–1738, the higher release fractions for lanthanum and cerium in the high Ru source term are based on a 1995 study of the Chernobyl accident.

As described in NUREG–1738, Ru in a steam environment has a very low vapor pressure that tends to limit its release (NRC 2001). For spent fuel pool accidents involving rapid draindown of

the pool, and thus primarily an air environment during fuel heat up, the volatility of Ru might be much higher. Recent modeling suggests that Ru release in an air environment would in fact be much higher than in a steam environment, but still several orders of magnitude below the release fractions used for the high Ru release in NUREG–1738 (Gauntt 2010). For this reason, the low Ru results from NUREG–1738 (NRC 2001) are more representative of the anticipated consequences of even a high-volatility Ru spent fuel pool fire sequence.

The NRC assesses the consequences of a spent fuel pool fire and other severe accidents in terms of health impacts and economic damages. The health impacts from spent fuel pool fires are measured through both individual impacts at select locations, and overall population consequences. Health impacts include the early fatality risk to an individual within 1.6 km (1 mi) of the plant and the latent fatality risk to an individual within 16 km (10 mi) of the plant. These health impacts represent possible exposures and consequences to the population near a nuclear facility. Early fatalities are the number of fatalities expected to occur within a few weeks or months of the accident for the individuals exposed to large doses of radiation. Latent fatalities are the number of cancer-related fatalities that occur over the lifetime of the exposed individuals.

Other health impacts that the NRC considers include collective dose to the public within 80 km (50 mi) of the plant, and the collective latent fatalities within 800 km (500 mi) of the plant (NRC 2001). The collective dose is the dose received by the total population living within a specific distance from the facility, including return dose and the dose to workers during decontamination of contaminated land; this value depends upon the site-specific population within a specific distance of the plant. In Table F-1, health effects taken from NUREG–1738 (NRC 2001) are based on a postulated spent fuel pool fire at Surry releasing a large fraction (i.e., approximately 75 percent of the iodine and cesium) from a radiological inventory consisting of its final core offload plus its previous ten refueling outages, which is equivalent to approximately 3.5 cores. A similar scenario examined in NUREG–1353 (NRC 1989) and NUREG/BR–0184 (NRC 1997) involved releasing a large fraction (i.e., 100 percent of the iodine and cesium) from a radiological inventory consisting of 3.5 cores of spent fuel from the R.E. Ginna nuclear power plant and an 80-km (50-mi) average population density of 330 persons/km^2 (860 persons/mi^2) (based on the population around the Zion Nuclear Power Station [Zion] in Illinois). In general, health impacts could be higher or lower than the values reported in these studies if the amount of radioactive material that could be released (which depends on the amount of material in the pool and the fraction of that material involved in the fire) were higher or lower than assumed in these studies or the total population and population density were higher or lower.

For perspective, the radiological inventory of Cs-137 from NUREG–1738 (NRC 2001) can be computed as approximately 40 MCi of Cs-137, and the radiological inventory from NUREG–1353 (NRC 1989) was computed to be approximately 20 MCi. These values are somewhat lower than the average values reported in COMSECY–13–0030 (NRC 2013b).

Table 72 from COMSECY–13–0030 illustrates that the radiological inventory of Cs-137 in high-density storage at nuclear power plants can range from 20.4 to 175.4 MCi of Cs-137, assuming each spent fuel pool is at its licensed capacity of spent fuel in storage. Conversely, the release fractions assumed in NUREG–1738 (i.e., 75 percent of the radioiodine and radiocesium) or NUREG–1353 (i.e., 100 percent of the radioiodine and radiocesium) are higher than the release fractions computed in more recent studies (e.g., SECY–13–0112 [NRC 2013a], which estimated cesium release fractions from 49 percent to less than 1 percent). Therefore, although the total radiological inventory at a given site might be higher than the values used in NUREG–1738 (NRC 2001) and NUREG–1353 (NRC 1989), the release fraction would likely be significantly lower than that assumed in either report.

Likewise for population, Table 53 of COMSECY–13–0030 shows the distribution of population density around nuclear power plant sites in the United States (NRC 2013b). The average population density within 80 km (50 mi) of U.S. nuclear power plant sites is approximately 120 persons/ km^2 (300 persons/mi^2), consistent with the Surry site. The average population around the Zion site of 330 persons/km^2 (860 persons/mi^2) is greater than the 90th percentile population density of approximately 270 persons/km^2 (700 persons/mi^2). As discussed in NUREG–1738 (NRC 2001), the use of the Surry site means that the accident consequences could be greater at higher population sites, but the quantitative health objectives used in NUREG–1738 for comparisons to the Commission's safety goals represent the risk to the average individual within 1.6 km (1 mi) and 16 km (10 mi) of the plant. That risk should not vary significantly with the size of the site-specific population around a plant because those risks are averaged (i.e., determined by dividing the total number of cases by the affected population within the specified region).

Health impacts can also be affected by protective action guidelines, or the radiation dose levels above which emergency response officials will recommend protective actions like evacuation or sheltering. Higher protective action guidelines could increase public doses by allowing people to remain in affected locations longer or by reducing the area that would be subject to long-term actions (e.g., decontamination or interdiction). Different types of radioactive material can also change health impacts. For example, early fatalities would likely be caused by short-lived radioactive material that is present in operating reactors. Once spent fuel has been removed from a reactor and stored in the spent fuel pool, short-lived radioactive material will decay to such low levels that accidents would result in fewer early fatalities in the surrounding population.

The NRC also analyzes consequences in terms of the economic consequences arising from the actions taken to avoid human exposure. The economic consequences identified in Table F-1 take into account various costs, including offsite and onsite property damage resulting from the release of radioactive material and the resulting land contamination. Offsite property damage includes evacuation costs, relocation costs for displaced persons, property decontamination costs, loss of use of contaminated property through interdiction, crop, and milk losses. The

onsite property damage costs include onsite cleanup and decontamination, repair of the spent fuel pool, and removal of fuel. The total onsite and offsite economic damage values were estimated to be between 55.7 and 57.8 billion dollars per event (NRC 1989, 1997), when adjusted to 2010 dollars.

These values represent the economic consequences out to 80 km (50 mi), which is consistent with how NRC typically examines offsite property impacts from reactor accidents (NRC 1997). For very large releases (e.g., those that are possible in the event of a spent fuel pool fire), aerosols can potentially be transported beyond 80 km (50 mi) under appropriate atmospheric conditions. This effect can be seen in the NRC's more recent analysis in SECY–13–0112 (NRC 2013a) by comparing the consequences from an accident in which mitigation is credited—which would lead to a smaller release—to the consequences of an accident in which no mitigation is credited. For example, Tables 35 and 36 of SECY–13–0112 show that land interdiction and relocation of individuals, respectively, could occur well beyond the range of 80 km (50 mi) in the event of a very large release from the spent fuel pool. As with health impacts, the economic impacts would vary for different facilities. For example, higher total population or population density, higher property values, and higher level of protective action guidelines in place, could result in higher relocation costs, and land use (e.g., whether land is used as farmland or not) could also impact decontamination and condemnation costs. For perspective, the population density used to estimate the economic impacts presented in Table F-1 involved an 80-km (50-mi) average population density of 330 persons/km^2 (860 persons/mi^2) based on the population around the Zion in Illinois (NRC 1989, 1997). This population density is slightly higher than the 90th percentile population density reported in Table 53 of COMSECY–13–0030 (NRC 2013b). Although the economic consequences could be higher or lower at a specific site, the site-specific factors that influence the magnitude of the economic consequences of a spent fuel pool would have a similar influence on the magnitude of the economic consequences of a reactor accident. Because of this, when put in the context of the probability of an accident occurring, the probability-weighted economic consequences of a spent fuel pool fire at a given site can be compared to the probability-weighted consequences of a reactor accident at the same site. This is discussed further in Section F.1.2.

Although discussed in more detail in the next section, Table F-1 also includes probability and consequence values for a spent fuel pool fire (NRC 1989, 1997, 2001). As shown in Table F-1, the zirconium cladding fire probability in the 1989 regulatory analysis was calculated as 2×10^{-6}/yr, which is almost identical to the 2.4×10^{-6}/yr probability from NUREG–1738 (NRC 2001) that the NRC is using for this appendix.

F.1.2 Probability-Weighted Consequences of a Spent Fuel Pool Fire

As discussed in Section 4.18.2.1, with respect to severe (or beyond-design-basis) accidents, the consequences of a severe accident, should one occur, would be significant and destabilizing. The impact determinations for these accidents, however, are made with consideration of the low

probability of these events. The environmental impact determination with respect to severe accidents, therefore, is based on the risk, which the NRC defines as the product of the probability and the consequences of an accident. This means that a high-consequence, low-probability event, like a severe accident, could still result in a small impact determination, if the risk is sufficiently low.

The NRC has considered a number of initiating events that could lead to a spent fuel pool fire. These events include loss of offsite power, internal fires, loss of pool cooling, loss-of-coolant inventory, seismic event, cask drop, aircraft crash, and a tornado missile (NRC 2001). These initiating events are discussed in more detail below and, as supplemented by the overall discussion of accidents in Section 4.18 of this GEIS, provide the range of credible initiating events for spent fuel pool fires.

The main contributors to the frequency of loss-of-coolant in the pool and exposure of the spent fuel to air are seismic events and cask drop (NRC 2001). The low frequency of other events, (e.g., loss of offsite power, internal fires, loss of pool cooling, and loss-of-coolant inventory) were found in NUREG–1738 to be low on the basis of specific industry decommissioning commitments and staff decommissioning assumptions discussed in Sections 3.3 and 3.4 of NUREG–1738 (NRC 2001). As shown in Table F-1, for the credible initiating events considered, the NRC has determined that, considering the range in seismic hazard across the United States, the mean value of the frequency of fuel being uncovered could be between 5.8×10^{-7} Ryr^{-1} and 2.4×10^{-6} Ryr^{-1} depending upon the seismic hazard assessment (NRC 2001).[5] Although some sites could have a value greater than 1×10^{-5} Ryr^{-1}, the value used in NUREG–1738 bounds about 70 percent of the sites using the Lawrence Livermore National Laboratory hazard curves. These values are consistent with those used in COMSECY–13–0030 (NRC 2013b), where the likelihood of a release was judged in Table 43 to range from 5.5×10^{-7} to 3.5×10^{-5} Ryr^{-1}, with a best estimate on the order of 5.5×10^{-6} Ryr^{-1}. For sites where seismically induced radiological release frequency exceeded the mean, the NRC determined in NUREG–1738 that based on the generic spent fuel pool fragility analysis, the seismic risk at all but four sites—which included three western plants for which updated seismic hazard information was not available—was below the value consistent with the large early release frequency criterion for managing reactor risk (i.e., 1×10^{-5} Ryr^{-1}) (NRC 2001). Further, the NRC is requiring all operating reactor licensees to perform an updated seismic hazard evaluation for each site, which will include an evaluation of spent fuel pool seismic risk (NRC 2012b). Should new information indicate spent fuel pool risk is significantly greater than

[5] The seismic risk analysis performed in NUREG–1738 was based on site-specific seismic hazard estimates for nuclear power plants in the central and eastern United States found in NUREG–1488, "Revised Livermore Seismic Hazard Estimates for 69 Nuclear Power Plant Sites East of the Rocky Mountains" (NRC 1994). As such, nuclear power plants in the western United States (e.g., Diablo Canyon, San Onofre, and Columbia) were not specifically considered in this study.

previously considered, the NRC would take the appropriate regulation action to ensure protection to public health and safety. Seismic risk, in general, is discussed in more detail in Section 4.18. However, because of the reduction in both the radionuclide inventory due radioactive decay and the heat generated by the spent fuel, the greatest risk from a spent fuel pool fire would be at the beginning of the short-term timeframe, and risk would decrease over time.

On the issue of boiloff events, NUREG–1738 (NRC 2001) found that, given the industry decommissioning commitments and staff decommissioning assumptions, the likelihood of boiloffs from all causes was comparable to the likelihood of fuel uncovery from a cask drop or to the likelihood of a seismically induced pool failure based on the EPRI seismic hazard estimates, and approximately an order of magnitude lower than the likelihood of a seismically induced pool failure based on the Lawrence Livermore National Laboratory seismic hazard estimates. Slow boiloff events can lead to an accident progression qualitatively similar to a partial draindown or a slow draindown. However, the time before the water in the spent fuel pool would heat up and boil off would vary based on the decay power of the spent fuel in the pool. Boiloff events are discussed in Section 3.7.2 of NUREG–1738. As the short-term timeframe considered in this GEIS can last up to 60 years after final shutdown, the drop in decay power of the fuel would lead to a boiloff scenario that proceeds increasingly slowly with the passage of time. In general, decay power is dominated by the most recently discharged fuel, as shown in the comparison of a high- and low- density loading pool configuration found in Section 6.3.1 of SECY–13–0112 (NRC 2013a). The effect that reduced decay power has on time available for pool recovery is demonstrated by Table 2.1 of NUREG–1738 (NRC 2001), which shows that the time until fuel uncovery ranges from at least 4 days at 60 days following shutdown to more than 22 days at 10 years following shutdown. As the spent fuel continues to cool following the permanent cessation of operation, the increasingly slow rate of boiloff that results renders pool recovery increasingly likely with the passage of time. Based on significant time between the initiating event and the spent fuel assemblies becoming partially or completely uncovered, the licensee and State and Federal authorities would have time to initiate appropriate mitigating actions to prevent a spent fuel pool fire, and if a release is projected to occur, for offsite agencies to take protective actions to protect the health and safety of the public. Although the environment near a pool undergoing boiloff could make pool recovery challenging, the pool is an unpressurized system and the water level can be recovered with fairly simple systems. Further, in contrast to large leaks resulting from structural failure of the spent fuel pool, large volumes of water would not be needed to make up for boiloff losses. Nevertheless, boiloff events were considered in NUREG–1738 and are included in the results summarized in Table F-2.

As discussed earlier, the source term used in this GEIS is derived from the low Ru source term used in NUREG–1738. It includes both the final core offload and the previous ten refueling outage offloads (NRC 2001). The NRC estimated this to be roughly 3.5 core loads in the spent fuel pool, based on an adjusted inventory for the Millstone 1 nuclear power plant that accounted

for larger reactors and the fact that NUREG–1738 was limited to spent fuel pool accidents during decommissioning (NRC 2001). As discussed previously, these values are somewhat lower than those reported in COMSECY–13–0030 (NRC 2013b). In addition, the NRC considered a range of times in which the event could occur after shutdown, including 30 days, 90 days, 2 years, 5 years, and 10 years after final shutdown (NRC 2001).

Table F-2. Comparison of Frequency-Weighted Consequences from Reactor Accidents and Spent Fuel Pool Fires

	Individual Risk		Population Risk			
Accident Type	**Early Fatalities (within 1 mi) (Ryr^{-1})**	**Latent Fatalities (within 10 mi) (Ryr^{-1})**	**Collective Dose (person-Sv Ryr^{-1})**	**Early Fatalities (Ryr^{-1})**	**Latent Fatalities (Ryr^{-1})**	**Economic Damage ($ Ryr^{-1})[a]**
Severe Reactor Accident[b]	1.5×10^{-8}	1.5×10^{-9}	0.06	2.0×10^{-6}	5.2×10^{-3}	1.1×10^{5}[c]
Spent Fuel Pool Fire[d]	3.9×10^{-9} to 3.0×10^{-8}	3.1×10^{-8} to 4.5×10^{-8}	0.11 to 0.13	1.9×10^{-7} to 5.3×10^{-6}	5.6×10^{-3} to 5.9×10^{-3}[e]	1.0×10^{5}[f] to 1.1×10^{5}[g]

(a) Values adjusted to 2010 dollars using the Consumer Price Index Inflation Calculator.
(b) From NUREG–1150 for Surry Power Station (NRC 1990), except for economic damage (see Note (c)).
(c) From NUREG–1437, Supplement 6, Surry Power Station Units 1 and 2 (NRC 2002), without public exposure costs.
(d) From NUREG–1738 (NRC 2001, Table 3.7-2 late evacuation and Table 3.1 total fuel uncovery frequency assuming Lawrence Livermore National Laboratory seismic hazard), except population latent fatality and economic damage risks.
(e) From NUREG–1738, (NRC 2001, Tables A4-7 through A4-9), which reflect a range of the three Surry cases evaluated, for distances up to 160 km (100 mi), and between 30 days and 1 year decay time prior to the accident. Event frequency is 2.4×10^{-6} Ryr^{-1} (NRC 2001).
(f) NUREG/BR–0184 (NRC 1997, Tables C.95 and C.101), without replacement power costs.
(g) From NUREG–1353 (NRC 1989, Tables 4.8.3, 5.1.1, and 5.1.2), without replacement power costs.

Spent fuel is susceptible to ignition (i.e., a runaway oxidation reaction) only if the fuel is not air-coolable in the event of water loss. There may be many scenarios where the fuel is air-coolable. For example, for the specific conditions analyzed in SECY–13–0112 (NRC 2013a, the NRC found that the fuel was air-coolable (defined in that study as no radioactive release within 72 hours) about two months after reactor shutdown. Because the short-term timeframe considered in this GEIS can last for up to 60 years beyond the licensed life for operation, the drop in decay power of the fuel makes air-coolability increasingly likely with the passage of time in the event of a complete loss of water. However, the effect of partial draindowns that restrict airflow can result in degraded air-cooling. As discussed in NUREG–1738 (NRC 2001), the NRC has not defined an age after which spent fuel is no longer susceptible to ignition. NUREG–1738 therefore assumed that a fire would be initiated if the water level reached 0.9 m (3 ft) from the top of the spent fuel. The quantitative impact estimates in Table F-1 and Table F-2 are based

on this assumption, with the range of quantitative impact estimates using decay times of anywhere from 30 days to 10 years after final shutdown. However, as the fuel continues to age after reactor shutdown, it will become less hazardous due to radioactive decay and the reduction of the heat generated by the spent fuel. Thus, both the consequences and risk predicted by the analysis will continue to decrease in comparison to the values in Table F-1 through the short-term timeframe because the fuel would have been cooling in the spent fuel pool for a longer period of time, which would increase the likelihood of air-coolability and decrease source term (less radionuclide inventory) due to decay, particularly for the short-lived radionuclides that would contribute the most to the potential for early fatalities.

In NUREG–1738, the NRC determined that the probability-weighted consequences of a spent fuel pool accident, including a spent fuel pool fire, could be comparable to the probability-weighted consequences of a severe reactor accident (NRC 2001). Therefore, the NRC has decided to include a comparison of the frequency-weighted consequences of a severe reactor accident to the frequency-weighted consequences of a spent fuel pool fire to provide a more complete picture of the overall risks of a spent fuel pool fire. As discussed above, the frequency-weighted consequences, or the risk, of a spent fuel pool fire represent the NRC's determination of the environmental impacts of this event.

Table F-2 provides the probability-weighted consequences (risk) resulting from a spent fuel pool fire. This table demonstrates that the probability-weighted consequences of a spent fuel pool fire are comparable to those for severe reactor accidents. Early in the short-term timeframe, the offsite health impacts of a spent fuel pool fire, as evaluated in NUREG–1738 (NRC 2001), can be comparable to those from a severe accident at an operating reactor. More recent studies, such as NUREG–1935, State-of-the-Art Reactor Consequence Analyses (SOARCA) Report (NRC 2012a) and SECY–13–0112 (NRC 2013a, respectively, suggest that probability-weighted health impacts of reactor accidents and spent fuel pool accidents would be low and well within the Commission's safety goals. In the unlikely event of an accident at either a reactor or spent fuel pool, the probability-weighted consequences of offsite economic impacts would be comparable because, while the economic impacts of a spent fuel pool fire could be larger than those from a reactor accident, a spent fuel pool accident is less likely than a reactor accident.

With the exception of the economic damage risk figures for spent fuel pool fire, all of the risk values in Table F-2 are for Surry. Economic damage risk figures for spent fuel pool fires are not available for Surry; thus, this GEIS uses available economic damage risk figures that are as similar as possible. A similar case studied previously by NRC involved 3.5 cores of spent fuel from the R.E. Ginna nuclear power plant and an 80-km (50-mi) average population density of 330 persons/km^2 (860 persons/mi^2), which is based on the population around the Zion in Illinois (NRC 1989). Given that the analysis in this GEIS is concerned with spent fuel pool fires at nuclear power plants that have permanently ceased operations, the economic damage risk figures for spent fuel pool fires presented in Table F-2 do not include replacement power costs.

The costs considered include those for onsite cleanup, repair, disposal of wastes, and offsite economic damage (e.g., relocation of people and property decontamination).

The NRC is using the results for Surry because there are few stations for which quantitative risk values are available for both an onsite reactor accident and a spent fuel pool fire. The NRC believes that a comparison of severe reactor accidents and spent fuel pool fires for Surry is appropriate for this generic analysis because:

- Each of the two pressurized water reactor units at Surry generate approximately the same levels of thermal and electric power as the reference facility described elsewhere in this GEIS (838 MW(e) versus the reference value of 1,000 MW(e)), and the shared Surry spent fuel pool is licensed to store 1,044 spent fuel assemblies—the equivalent of about 4.6 full reactor cores, or about 520 MTU—which is approximately the pool capacity used elsewhere in this GEIS (520 MTU versus the reference value of 700 MTU). The NRC has determined that the differences between the Surry and the reference facility values are not significant for this impact analysis and, as noted above, the impacts can be scaled appropriately for any particular facility's surrounding population and source term characteristics.
- The consequences of a severe reactor accident will change in direct proportion to the reactor's power level. Likewise, the consequences of a spent fuel pool fire will change in direct proportion to the amount of spent fuel stored in the pool. In the case of Surry, both the reactor power level and the spent fuel pool licensed capacity are both about the same proportion lower than the reference facility described in Chapter 2 of the GEIS. As a result, the ratio of severe reactor accident risk to spent fuel pool fire risk is likely to be similar for the reference reactor described in Chapter 2.

The risk values in Table F-2 include individual risks and population risks. The individual risk values for both severe reactor accidents and spent fuel pool fires are comparable to each other and both lower than the NRC's Quantitative Health Objectives contained in its Safety Goal Policy Statement (51 FR 30028) for both individual early fatality risk (5×10^{-7} Ryr^{-1}) and individual latent fatality risk (2×10^{-6} Ryr^{-1}) (NRC 2001). As stated above, the population risk values for the two accident types are comparable. The public exposure costs are not included in the severe reactor accident economic cost-risk figures because the spent fuel pool fire economic damage risk from the reports cited did not include public exposure costs.

This analysis shows that the probability-weighted consequences for a spent fuel pool fire, as analyzed in NUREG–1738, are comparable to the probability-weighted consequences for severe power reactor accidents analyzed in the 1996 and 2013 License Renewal GEIS (NRC 1996, 2013c). Not only are spent fuel pool probability-weighted consequences comparable, but NUREG–1738 contains several built-in conservative assumptions. For example, NUREG–1738 assumed that the zirconium fuel cladding would start to burn and was nonrecoverable as soon as the water level in the spent fuel pool fell to within 0.9 m (3 ft) of the top of the fuel assemblies

(NRC 2001). However, a 2008 Denial of Petition for Rulemaking (73 FR 46204) analysis shows that there would be significant time between the initiating event and the spent fuel assemblies becoming partially or completely uncovered. In addition, air-cooling of spent fuel in the event of a complete draindown would be sufficient to prevent spent fuel pool zirconium fires at a point much earlier following fuel offload from the reactor than was considered in NUREG–1738 (73 FR 46204). Thus, more time would be available for operator intervention, which would lower the probability of a draindown event leading to a spent fuel pool fire.

Since the publication of NUREG–1738, the NRC has required licensees to undertake additional actions to further reduce the probability of a spent fuel pool fire. These additional actions resulted from insights following the September 11, 2001 terrorist attack and the March 11, 2011 Fukushima Dai-ichi accident.

In response to the September 11, 2001 terrorist attacks, the NRC imposed license conditions at most operating reactors to ensure that licensees have mitigating strategies in place for attacks on spent fuel pools. Those conditions would remain in place after shutdown. Where license conditions are not in place, the NRC has determined, based on site-specific physical characteristics, that the spent fuel pool is not susceptible to being breached and drained of cooling water. These requirements were codified in 10 CFR 50.54(hh)(2). While the requirements of 10 CFR 50.54(hh)(2) are currently not applicable for spent fuel pools at decommissioning reactors, the NRC is considering rulemaking to, among other things, apply the requirements of 10 CFR 50.54(hh)(2) to decommissioning facilities with spent fuel still in a spent fuel pool. See rulemaking docket NRC-2011-0299, “Station Blackout Mitigation” for more information. Other organizations, such as Sandia National Laboratory, have confirmed the effectiveness of the additional mitigation strategies to maintain spent fuel cooling in the event the pool is drained and its initial water inventory is reduced or lost entirely (73 FR 46204). Generic strategies for spent fuel pool cooling are further discussed in a publication prepared by the Nuclear Energy Institute, a nuclear industry policy group, in NEI–06–12, Revision 2 (NEI 2006), which has been endorsed by the NRC. As a result of these additional actions, NRC has concluded that the probability of an initiating event leading to a spent fuel pool fire is less likely than analyzed in the NUREG–1738 (NRC 2001) and previous studies (73 FR 46204). Therefore, the analysis provided in Table F-2, based upon NUREG–1738, is a conservative estimate of spent fuel pool risk.

The NRC conducted additional evaluations to assess its regulatory framework in response to the March 2011 Fukushima Dai-ichi events. On March 11, 2011, a massive earthquake off the east coast of Honshu, Japan, produced a devastating tsunami that struck the coastal town of Fukushima. The six-unit Fukushima Dai-ichi nuclear power plant was most directly affected by these events. Damage to the systems and structures of the reactor building resulted in the release of radioactive material to the surrounding environment. While this accident led to a substantial release of radioactive material, the fuel stored in the spent fuel pools was not

uncovered and the event did not lead to a spent fuel pool fire. Information on the event indicates that spent fuel pool cooling was lost for all spent fuel pools following the loss of offsite power (INPO 2011). But subsequent analyses and inspections confirmed that the spent fuel pool water levels did not drop below the top of the fuel in any of the spent fuel pools and no significant damage occurred to the fuel in the pools. These events demonstrate that, even without spent fuel cooling for multiple days, the pools were able to keep the spent fuel cool (INPO 2012).

In response to the earthquake, tsunami, and resulting reactor accidents at Fukushima Dai-ichi, the Commission directed the staff to convene an agency task force of senior leaders and experts to conduct a methodical and systematic review of the relevant NRC regulatory requirements, programs, and processes, including their implementation, and to recommend whether the agency should make near-term improvements to its regulatory system. As part of the short-term review, this Near-Term Task Force concluded that some additional improvements to spent fuel pool storage and other structures, systems, and components would be beneficial. In NRC Order EA–12–049, the NRC required operating reactor licensees to implement mitigating strategies to ensure that spent fuel pool cooling can be accomplished through alternative means to prevent fuel damage (NRC 2012c). In addition, in NRC Order EA–12–051, the NRC determined that operating reactor licensees must have a reliable means to remotely monitor a wide-range of spent fuel pool levels to support effective prioritization of event mitigation and recovery actions in the event of a beyond-design-basis external event (NRC 2012d).

As part of the agency's Station Blackout Mitigation rulemaking, the NRC is considering a variety of requirements that would further decrease the probability of a spent fuel pool fire during the short-term timeframe. Among the options being evaluated as part of this rulemaking is the need to require licensees of decommissioning facilities to develop mitigating strategies to restore spent fuel pool cooling, similar to what is now required of operating reactor licensees. These measures would further reduce the probability of a spent fuel pool fire, and thus further increase the conservatism of the estimate of spent fuel pool risk provided in Table F-2.

F.1.3 Conclusion

In summary, the conservative estimates that the NRC is using to assess spent fuel pool fire accidents, based upon NUREG–1738 and other analyses, results in probability-weighted population doses and economic consequences that are comparable to the values calculated for a severe reactor accident, as estimated in the 1996 and 2013 License Renewal GEIS (NRC 1996, 2013c). Further, mitigation measures implemented by licensees as a result of NRC orders and regulations adopted since NUREG–1738 have further lowered the probability and risk of a spent fuel pool fire. As a result, the NRC finds that the environmental impacts from spent fuel pool fires are SMALL during the short-term storage timeframe.

F.2 References

F.2.1 Summary of Major Studies Considered in this Appendix

One of the earlier spent fuel pool accident studies considered by the NRC was *Reactor Safety Study: An Assessment of Accident Risks in U.S. Commercial Nuclear Power Plants* (NRC 1975). The Reactor Safety Study provides a systematic quantification of commercial nuclear reactor accident probabilities. Appendix I of the Reactor Safety Study covers various accidents, including spent fuel pool accidents. The Reactor Safety Study states that spent fuel pool accidents can arise from either loss of spent fuel pool cooling, drainage of the spent fuel pool, or dropping of heavy items into the spent fuel pool. The Reactor Safety Study also indicates that the probability of a loss-of-cooling event is small at less than 0.1 events per year. The Reactor Safety Study used this information to estimate the probability of fuel damage due to loss of pool cooling. This study examined drainage of the spent fuel pool and concluded that the probability of drainage is much lower than for a loss-of-cooling event because drainage would require multiple failures to occur simultaneously. In addition to loss-of-cooling accidents, the Reactor Safety Study examined mechanical failure, both for dropping a cask into the spent fuel pool or due to an earthquake. This study concluded that the risks for a spent fuel pool accident were orders of magnitude below those involving the reactor core because of the robust design of the spent fuel pool.

In 1989, the NRC completed a generic analysis of potential accidents in spent fuel pools, *Regulatory Analysis for the Resolution of Generic Issue 82, 'Beyond Design Basis Accidents in Spent Fuel Pools'* (NRC 1989). This analysis reexamined spent fuel pool fires because 1) spent fuel pool storage had been expanded, including use of high-density storage racks and 2) new research had provided evidence of the possibility of fire propagation between assemblies in an air-cooled environment. This generic analysis examined the various spent fuel pool and spent fuel storage rack designs. The NRC used this information to assess various accident sequences, including failure due to missiles, aircraft crashes, heavy-load drop, seal failure, inadvertent draining, loss-of-cooling, and seismic events. The NRC quantified the probabilities of these initiation events and assessed both the health and economic consequences.

The safety and environmental effects of spent fuel pool storage were further addressed in conjunction with regulatory assessments of permanently shutdown nuclear plants and decommissioning nuclear power plants. NUREG/CR–6451, *A Safety and Regulatory Assessment of Generic BWR and PWR Permanently Shutdown Nuclear Power Plants* (Travis et al. 1997), addressed the appropriateness of regulations (e.g., requirements for emergency planning and insurance) associated with spent fuel pool storage. The study also provided bounding estimates for offsite consequences for the most severe accidents, which would involve draining of the spent fuel pool (e.g., complete draining of the spent fuel pool occurs 12 days after shutdown of the reactor).

In 2001, the NRC published the results of its technical study on spent fuel pool accident risk at decommissioning nuclear power plants. This study, NUREG–1738, *Technical Study of Spent Nuclear Fuel Pool Accident Risk at Decommissioning Nuclear Power Plants*, also examined spent fuel pool zirconium fires (NRC 2001). The NRC's analyses showed that, although the consequences for a spent fuel pool fire could be high, the risk (probability-weighted consequence) would be low because the loss-of-coolant event frequency is low. The NRC's analysis was based on a spent fuel pool at a decommissioning nuclear power plant but included times shortly after plant shutdown. Therefore, the study included analysis of accident conditions for spent fuel that had various amounts of decay heat. The risk analyses included sensitivity studies to evaluate scenarios in which members of the public residing near the plant did not evacuate as promptly as expected, given emergency preparedness requirements. This analysis assumed a spent fuel pool inventory equivalent to 3.5 reactor cores, a much more densely packed pool than assumed by the 1975 Reactor Safety Study. Further, NUREG–1738 included core loads with an average fuel burnup of 60 gigawatt-days/metric ton uranium, which is consistent with high-burnup fuel. This study represents the NRC's current judgment as to the expected impacts from a spent fuel pool fire during the short-term storage timeframe.

In 2013, the NRC completed *Consequence Study of a Beyond-Design-Basis Earthquake Affecting the Spent Fuel Pool for a U.S. Mark I Boiling Water Reactor*, which was published as SECY–13–0112 (NRC 2013a). This study continued the NRC's examination of the risks and consequences of postulated spent fuel pool accidents. The purpose of this study was to determine if accelerated transfer of older, cooler spent fuel from the spent fuel pool at a reference plant to dry cask storage would significantly reduce risks to public health and safety. The specific reference plant used for this study was a GE Type 4 BWR with a Mark I containment. This study presented a detailed analyses using state-of-the-art, validated, deterministic methods and assumptions, as well as probabilistic insights where practical. Previous studies had shown that earthquakes present the dominant risk for spent fuel pools, so this analysis considered a severe earthquake with ground motion stronger than the maximum earthquake reasonably expected to occur for the reference plant, which would challenge the spent fuel pool integrity. The study considered two spent fuel configurations—high-density and low-density loading—and the successful and unsuccessful deployment of 10 CFR 50.54(hh)(2) mitigation. The results of SECY–13–0112 are consistent with earlier research conclusions that spent fuel pools are robust structures that are likely to withstand severe earthquakes without leaking. The results of SECY–13–0112 show that the overall level of safety with respect to spent fuel storage in a spent fuel pool currently achieved at the reference plant is high and that the level of risk at the reference plant is very low.

In 2013, the NRC performed an evaluation of whether additional study of expedited transfer of spent fuel from spent fuel pools might be warranted. This evaluation was documented in COMSECY–13–0030 (NRC 2013b). For this analysis, the NRC evaluated the merits of additional research by comparing the status quo to a scenario in which expedited transfer would

be required. The NRC's analysis in COMSECY–13–0030 expanded upon the regulatory analysis in SECY–13–0112 (NRC 2013a) by covering spent fuel pool designs used in operating and decommissioned reactors in the United States. To determine if additional studies were needed, the NRC conducted a two-part analysis of expedited transfer. The NRC first assessed the potential safety benefits by using the Commission's 1986 Safety Goal Policy Statement. The NRC then proceeded to perform a cost-benefit analysis to provide additional information for the Commission's consideration. Despite the large releases for some low-probability accident progressions analyzed, the projected consequences indicated that there would be no offsite early fatalities from acute radiation effects. In addition, the NRC found that the added costs involved with expedited transfer of spent fuel to dry cask storage in order to achieve the low-density loading spent fuel pool storage alternative were not warranted in light of the benefits from expedited transfer. Based on the generic assessment and the other considerations detailed in COMSECY–13–0030 (NRC 2013b), the NRC found that additional studies were not needed to reasonably conclude that the expedited transfer of spent fuel to dry cask storage would provide only a minor or limited safety benefit (i.e., below the safety goal screening criteria), and that expected implementation costs would not be warranted. In 2014, the NRC closed the Tier 3 Japan lessons learned activity related to expedited transfer of spent fuel; however, the Commission directed the NRC staff to modify the regulatory analysis in COMSECY–13–0030 to explain why the "1 x 8" spent fuel pool loading configuration was not found to provide a substantial increase in safety (NRC 2014).

F.2.2 List of References

10 CFR Part 50. *Code of Federal Regulations*, Title 10, *Energy,* Part 50, "Domestic Licensing of Production and Utilization Facilities." Washington, D.C.

51 FR 30028. August 4, 1986. "Safety Goals for the Operations of Nuclear Power Plants; Policy Statement, Republication." *Federal Register*, U.S. Nuclear Regulatory Commission, Washington, D.C.

73 FR 46204. August 8, 2008. "The Attorney General of Commonwealth of Massachusetts, The Attorney General of California; Denial of Petitions for Rulemaking." *Federal Register*, U.S. Nuclear Regulatory Commission, Washington, D.C.

Gauntt, R.O. 2010. *MELCOR 1.8.5 Modeling Aspects of Fission Product Release, Transport and Deposition*. SAND2010–1635, Sandia National Laboratory, Albuquerque, New Mexico. Available at http://prod.sandia.gov/techlib/access-control.cgi/2010/101635.pdf.

INPO (Institute of Nuclear Power Operations). 2011. *Special Report on the Nuclear Accident at the Fukushima Dai-ichi Nuclear Power Station*. INPO–11–005, Revision 0, Atlanta, Georgia. Available at http://www.nei.org/corporatesite/media/filefolder/11_005_Special_Report_on_Fukushima_Daiichi_MASTER_11_08_11_1.pdf.

INPO (Institute of Nuclear Power Operations). 2012. *Lessons Learned from the Nuclear Accident at the Fukushima Dai-ichi Nuclear Power Station*. INPO–11–005 Addendum, Revision 0, Atlanta, Georgia. Available at http://www.wano.info/Documents/Lessons%20Learned.pdf.

NEI (Nuclear Energy Institute). 2006. *B.5.b Phase 2 & 3 Submittal Guideline*. NEI–06–12, Revision 2, Walnut Creek, California. Accession No. ML070090060.

NRC (U.S. Nuclear Regulatory Commission). 1975. *Reactor Safety Study: An Assessment of Accident Risks in U.S. Commercial Nuclear Power Plants*. NUREG–75/014 (WASH–1400), Washington, D.C. Accession No. ML083570090.

NRC (U.S. Nuclear Regulatory Commission). 1989. *Regulatory Analysis for the Resolution of Generic Issue 82, "Beyond Design Basis Accidents in Spent Fuel Pools."* NUREG–1353, Washington, D.C. Accession No. ML082330232.

NRC (U.S. Nuclear Regulatory Commission). 1990. *Severe Accident Risks: An Assessment for Five U.S. Nuclear Power Plants.* NUREG–1150, Volume 1, Washington, D.C. Accession No. ML120960691.

NRC (U.S. Nuclear Regulatory Commission). 1994. *Revised Livermore Seismic Hazard Estimates for Sixty-Nine Nuclear Power Plant Sites East of the Rocky Mountains*. NUREG–1488, Washington, D.C. Accession No. ML052640591.

NRC (U.S. Nuclear Regulatory Commission). 1995. *Accident Source Terms for Light-Water Nuclear Power Plants.* NUREG–1465, Washington, D.C. Accession No. ML041040063.

NRC (U.S. Nuclear Regulatory Commission). 1996. *Generic Environmental Impact Statement for License Renewal of Nuclear Plants*. NUREG–1437, Washington, D.C. Available at http://www.nrc.gov/reading-rm/doc-collections/nuregs/staff/sr1437/.

NRC (U.S. Nuclear Regulatory Commission). 1997. *Regulatory Analysis Technical Evaluation Handbook.* NUREG/BR–0184, Washington, D.C. Accession No. ML050190193.

NRC (U.S. Nuclear Regulatory Commission). 2001. *Technical Study of Spent Nuclear Fuel Pool Accident Risk at Decommissioning Nuclear Power Plants.* NUREG–1738, Washington, D.C. Accession No. ML010430066.

NRC (U.S. Nuclear Regulatory Commission). 2002. *Generic Environmental Impact Statement for License Renewal of Nuclear Plants, Supplement 6 Regarding Surry Power Station, Units 1 and 2.* NUREG–1437, Supplement 6, Washington, D.C. Accession No. ML023380748.

NRC (U.S. Nuclear Regulatory Commission). 2012a. *State-of-the-Art Reactor Consequence Analyses (SOARCA) Report*. NUREG–1935, Washington, D.C. Accession No. ML12332A053.

NRC (U.S. Nuclear Regulatory Commission). 2012b. *Request for Information Pursuant to Title 10 of the Code of Federal Regulations 50.54(f) Regarding Recommendations 2.1, 2.3, and 9.3, of the Near-Term Task Force Review of Insights from the Fukushima Dai-Ichi Accident.* Washington, D.C. Accession No. ML12053A340.

NRC (U.S. Nuclear Regulatory Commission). 2012c. *Issuance of Order to Modify Licenses with Regard to Requirement for Mitigation Strategies for Beyond-Design-Basis External Events*. EA–12–049, Washington, D.C. Accession No. ML12054A735.

NRC (U.S. Nuclear Regulatory Commission). 2012d. *Issuance of Order to Modify Licenses with Regard to Reliable Spent Fuel Pool Instrumentation.* EA–12–051, NRC–2012–051, Washington, D.C. Accession No. ML12056A044.

NRC (U.S. Nuclear Regulatory Commission). 2013a. *Consequence Study of a Beyond-Design-Basis Earthquake Affecting the Spent Fuel Pool for a U.S. Mark I Boiling Water Reactor*. SECY–13–0112, Washington, D.C. Accession No. ML13256A334.

NRC (U.S. Nuclear Regulatory Commission). 2013b. *Staff Evaluation and Recommendation for Japan Lessons-Learned Tier 3 Issue on Expedited Transfer of Spent Fuel*. COMSECY–13–0030, Washington, D.C. Accession No. ML13329A918.

NRC (U.S. Nuclear Regulatory Commission). 2013c. *Generic Environmental Impact Statement for License Renewal of Nuclear Plants*. NUREG–1437, Revision 1, Washington, D.C. Accession No. ML13107A023.

NRC (U.S. Nuclear Regulatory Commission). 2014. Memorandum from R.C. Bavol to M.A. Atorius, dated May 23, 2014, “Staff Requirements—COMSECY–13–0030—Staff Evaluation and Recommendation for Japan Lessons-Learned Tier 3 Issue on Expedited Transfer of Spent Fuel.” Washington, D.C. Accession No. ML14143A360.

Travis, R.J., R.E. Davis, E.J. Grove, and M.A. Azarm. 1997. *Safety and Regulatory Assessment of Generic BWR and PWR Permanently Shutdown Nuclear Power Plants*. NUREG/CR–6451, Brookhaven National Laboratory, Upton, New York. Accession No. ML082260098.

Appendix G

Spent Fuel Storage Facilities

Appendix G

Spent Fuel Storage Facilities

This appendix provides summary information concerning spent nuclear fuel (spent fuel) pools and independent spent fuel storage installations (ISFSIs), which are located primarily at operating commercial power reactors and decommissioned reactor sites.

Table G-1 through Table G-3 provide information about spent fuel pools. Specifically, Table G-1 lists operating reactors and the capacities of their spent fuel pools. Capacities at single-unit pressurized water reactor (PWR) power plants range from 544 assemblies at the H.B. Robinson Steam Electric Plant, Unit 2 to 2,363 assemblies at the Callaway Plant and the Wolf Creek Generating Station. At boiling water reactor (BWR) power plants, spent fuel pool capacities range from 1,803 assemblies at the Brunswick Steam Electric Generating plant to 4,608 assemblies at Fermi, Unit 2.

Table G-2 indicates the capacity of spent fuel pools for power reactors under construction, namely Vogtle Electric Generating Plant, Units 3 and 4; Virgil C. Summer Nuclear Station Units, 2 and 3; and Watts Bar Nuclear Plant, Unit 2. Table G-3 provides the capacity of spent fuel pools for decommissioning reactors. As of June 30, 2014, seven decommissioning reactors at five sites have spent fuel stored in pools. These are Crystal River Nuclear Generating Plant, Unit 3; Kewaunee Power Station; Millstone Power Station, Unit 1; San Onofre Nuclear Generating Station, Units 2 and 3; and Zion Nuclear Power Station, Units 2 and 3.

Table G-4 and Table G-5 provide information about ISFSIs with general and specific licenses under Title 10 of the *Code of Federal Regulations* (CFR) Part 72, respectively. These tables indicate which storage systems are in use at the ISFSIs and, if applicable, the transportation package associated with the storage system. The tables also indicate whether the storage system or transportation package is approved for use with high-burnup fuel.[1] The ISFSIs are located at operating and decommissioning reactor sites. As of June 30, 2014, ISFSIs were operating at 64 sites. All ISFSIs are dry storage facilities except for the facility at the General Electric-Hitachi Morris Operation (GEH Morris) site, which is a wet storage facility. Table G-5 also presents information about two specifically licensed ISFSIs (the Private Fuel Storage Facility and the Idaho Spent Fuel Facility) that were never constructed.

[1] The tables do not account for storage systems or transportation packages that the NRC has approved for use with high-burnup fuel but that are not in use at this time (e.g., the HI-STORM FW system).

The 10 CFR Part 72 general license authorizes a nuclear power plant licensee to store spent fuel in casks approved by the U.S. Nuclear Regulatory Commission (NRC) at a site licensed to operate a power reactor under 10 CFR Part 50 or 52. An NRC-approved cask is one that has undergone a technical review of its safety aspects and has been found to be adequate to store spent fuel at a site that meets all of the NRC's requirements in 10 CFR Part 72. A licensee is required to perform an evaluation of its site to demonstrate that the site is adequate for storing spent fuel in dry casks. This evaluation must show that the cask certificate of compliance conditions and technical specifications can be met and must include an analysis of earthquake events and tornado missiles. In addition, the licensee must review its security program, emergency plan, quality assurance program, training program, and radiation protection program, and make any changes necessary to incorporate the ISFSI at the reactor site. Requirements for the general license are described in Subpart K of 10 CFR Part 72.

Under a 10 CFR Part 72 site-specific license, an applicant submits a license application to the NRC. The NRC performs a technical review of all the safety aspects of the proposed ISFSI and an environmental review in compliance with the National Environmental Policy Act. If the application is approved, the NRC issues a license that is valid for up to 40 years. A spent fuel storage license contains technical requirements and operating conditions (i.e., fuel specifications, cask leak testing, surveillance, and other requirements) for the ISFSI and specifies what the licensee is authorized to store at the site. Requirements for the site-specific license are described in Subparts A through I of 10 CFR Part 72.

Table G-1. Capacity of Spent Fuel Pools for Operating Nuclear Power Reactors

Operating Reactors	Reactor Type	Core Size (assemblies)	Commercial Operation Start Date	Pool Capacity (assemblies)	Pool Capacity[a] (cores)	Estimated Pool Capacity[b] (MTU)
Arkansas Nuclear One, Unit 1	PWR	177	12/19/1974	968	4.5	484.0
Arkansas Nuclear One, Unit 2	PWR	177	3/26/1980	988	4.6	494.0
Beaver Valley Power Station, Unit 1	PWR	157	10/1/1976	1,627	9.4	813.5
Beaver Valley Power Station, Unit 2	PWR	157	11/17/1987	1,690	9.8	845.0
Braidwood Station, Unit 1	PWR	193	7/29/1988	2,984	13.5	1,492.0
Braidwood Station, Unit 2	PWR	193	10/17/1988	See above (pool shared with Unit 1)		
Browns Ferry Nuclear Plant, Unit 1	BWR	764	8/1/1974	3,471	3.5	645.6
Browns Ferry Nuclear Plant, Unit 2	BWR	764	3/1/1975	3,471	3.5	645.6
Browns Ferry Nuclear Plant, Unit 3	BWR	764	3/1/1977	3,471	3.5	645.6
Brunswick Steam Electric Plant, Unit 1[c,e]	BWR	560	3/18/1977	1,803	2.2	335.4
Brunswick Steam Electric Plant, Unit 2[d,e]	BWR	560	11/3/1975	1,839	2.3	342.1
Byron Station, Unit 1	PWR	193	9/16/1985	2,984	13.5	1,492.0
Byron Station, Unit 2	PWR	193	8/2/1987	See above (pool shared with Unit 1)		
Callaway Plant	PWR	193	12/19/1984	2,363	11.2	1,181.5
Calvert Cliffs Nuclear Power Plant, Unit 1	PWR	217	5/8/1975	1,830	6.4	915.0
Calvert Cliffs Nuclear Power Plant, Unit 2	PWR	217	4/1/1977	See above (pool shared with Unit 1)		
Catawba Nuclear Station, Unit 1	PWR	193	6/29/1985	1,421	6.4	710.5
Catawba Nuclear Station, Unit 2	PWR	193	8/19/1986	1,421	6.4	710.5
Clinton Power Station, Unit 1	BWR	624	11/24/1987	3,796	5.1	706.1
Columbia Generating Station, Unit 2	BWR	764	12/13/1984	2,658	2.5	494.4
Comanche Peak Steam Electric Station, Unit 1	PWR	193	8/13/1990	3,373	15.5	1,686.5
Comanche Peak Steam Electric Station, Unit 2	PWR	193	8/3/1993	See above (pool shared with Unit 1)		

Table G-1. Capacity of Spent Fuel Pools for Operating Nuclear Power Reactors (cont'd)

Operating Reactors	Reactor Type	Core Size (assemblies)	Commercial Operation Start Date	Pool Capacity (assemblies)	Pool Capacity[a] (cores)	Estimated Pool Capacity[b] (MTU)
Cooper Nuclear Station	BWR	548	7/1/1974	2,651	3.8	493.1
Davis-Besse Nuclear Power Station, Unit 1	PWR	177	7/31/1978	1,624	8.2	812.0
Diablo Canyon Nuclear Power Plant, Unit 1	PWR	193	5/7/1985	1,324	5.9	662.0
Diablo Canyon Nuclear Power Plant, Unit 2	PWR	193	3/13/1986	1,324	5.9	662.0
Donald C. Cook Nuclear Power Plant, Unit 1	PWR	193	8/28/1975	3,613	16.7	1,806.5
Donald C. Cook Nuclear Power Plant, Unit 2	PWR	193	7/1/1978	See above (pool shared with Unit 1)		
Dresden Nuclear Power Station, Unit 2	BWR	724	6/9/1970	3,537	3.9	657.9
Dresden Nuclear Power Station, Unit 3	BWR	724	11/16/1971	3,537	3.9	657.9
Duane Arnold Energy Center	BWR	368	2/1/1975	3,152	7.6	586.3
Edwin I. Hatch Nuclear Plant, Unit 1	BWR	560	12/31/1975	3,349	5.0	622.9
Edwin I. Hatch Nuclear Plant, Unit 2	BWR	560	9/5/1979	2,933	4.2	545.5
Fermi, Unit 2	BWR	764	1/23/1988	4,608	5.0	857.1
Fort Calhoun Station, Unit 1	PWR	133	9/26/1973	1,083	7.1	541.5
Grand Gulf Nuclear Station, Unit 1	BWR	800	7/1/1985	4,348	4.4	808.7
H.B. Robinson Steam Electric Plant, Unit 2[e]	PWR	157	3/7/1971	544	2.5	272.0
Hope Creek Generating Station, Unit 1	BWR	764	12/20/1986	4,006	4.2	745.1
Indian Point Nuclear Generating, Unit 2	PWR	193	8/1/1974	1,374	6.1	687.0
Indian Point Nuclear Generating, Unit 3	PWR	193	8/30/1976	1,345	6.0	672.5
James A. FitzPatrick Nuclear Power Plant	BWR	560	7/28/1975	3,239	4.8	602.5
Joseph M. Farley Nuclear Plant, Unit 1	PWR	157	12/1/1977	1,407	8.0	703.5
Joseph M. Farley Nuclear Plant, Unit 2	PWR	157	7/30/1981	1,407	8.0	703.5
LaSalle County Station, Unit 1	BWR	764	1/1/1984	3,986	4.2	741.4
LaSalle County Station, Unit 2	BWR	764	10/19/1984	4,078	4.3	758.5
Limerick Generating Station, Unit 1	BWR	764	2/1/1986	4,117	4.4	765.8
Limerick Generating Station, Unit 2	BWR	764	1/8/1990	4,117	4.4	765.8
McGuire Nuclear Station, Unit 1	PWR	193	12/1/1981	1,463	6.6	731.5

Table G-1. Capacity of Spent Fuel Pools for Operating Nuclear Power Reactors (cont'd)

Operating Reactors	Reactor Type	Core Size (assemblies)	Commercial Operation Start Date	Pool Capacity (assemblies)	Pool Capacity[(a)] (cores)	Estimated Pool Capacity[(b)] (MTU)
McGuire Nuclear Station, Unit 2	PWR	193	3/1/1984	1,463	6.6	731.5
Millstone Power Station, Unit 2	PWR	217	12/26/1975	1,346	5.2	673.0
Millstone Power Station, Unit 3	PWR	193	4/23/1986	1,860	8.6	930.0
Monticello Nuclear Generating Plant, Unit 1	BWR	484	6/30/1971	2,301	3.8	428.0
Nine Mile Point Nuclear Station, Unit 1	BWR	532	12/1/1969	4,086	6.7	760.0
Nine Mile Point Nuclear Station, Unit 2	BWR	764	3/11/1988	4,049	4.3	753.1
North Anna Power Station, Unit 1	PWR	157	6/6/1978	1,737	9.1	868.5
North Anna Power Station, Unit 2	PWR	157	12/14/1980	See above (pool shared with Unit 1)		
Oconee Nuclear Station, Unit 1	PWR	177	7/15/1973	1,312	5.4	656.0
Oconee Nuclear Station, Unit 2	PWR	177	9/9/1974	See above (pool shared with Unit 1)		
Oconee Nuclear Station, Unit 3	PWR	177	12/16/1974	825	3.7	412.5
Oyster Creek Nuclear Generating Station, Unit 1	BWR	560	12/1/1969	3,035	4.4	564.5
Palisades Nuclear Plant	PWR	204	12/31/1971	892	3.4	446.0
Palo Verde Nuclear Generating Station, Unit 1	PWR	241	1/28/1986	1,329	4.5	664.5
Palo Verde Nuclear Generating Station, Unit 2	PWR	241	9/19/1986	1,329	4.5	664.5
Palo Verde Nuclear Generating Station, Unit 3	PWR	241	1/8/1988	1,329	4.5	664.5
Peach Bottom Atomic Power Station, Unit 2	BWR	764	7/5/1974	3,819	4.0	710.3
Peach Bottom Atomic Power Station, Unit 3	BWR	764	12/23/1974	3,819	4.0	710.3
Perry Nuclear Power Plant, Unit 1	BWR	748	11/18/1987	4,020	4.4	747.7
Pilgrim Nuclear Power Station	BWR	580	12/1/1972	3,859	5.7	717.8
Point Beach Nuclear Plant, Unit 1	PWR	121	12/21/1970	1,502	10.4	751.0
Point Beach Nuclear Plant, Unit 2	PWR	121	10/1/1972	See above (pool shared with Unit 1)		
Prairie Island Nuclear Generating Plant, Unit 1	PWR	121	12/16/1973	1,386	9.5	693.0
Prairie Island Nuclear Generating Plant, Unit 2	PWR	121	12/21/1974	See above (pool shared with Unit 1)		
Quad Cities Nuclear Power Station, Unit 1	BWR	724	2/18/1973	3,657	4.1	680.2
Quad Cities Nuclear Power Station, Unit 2	BWR	724	3/10/1973	3,897	4.4	724.8

Table G-1. Capacity of Spent Fuel Pools for Operating Nuclear Power Reactors (cont'd)

Operating Reactors	Reactor Type	Core Size (assemblies)	Commercial Operation Start Date	Pool Capacity (assemblies)	Pool Capacity[a] (cores)	Estimated Pool Capacity[b] (MTU)
River Bend Station, Unit 1	BWR	624	6/16/1986	3,104	4.0	577.3
R.E. Ginna Nuclear Power Plant	PWR	121	7/1/1970	1,321	9.9	660.5
St. Lucie Plant, Unit 1	PWR	217	12/21/1976	1,706	6.9	853.0
St. Lucie Plant, Unit 2	PWR	217	8/8/1983	1,716	6.9	858.0
Salem Nuclear Generating Station, Unit 1	PWR	193	6/30/1977	1,632	7.5	816.0
Salem Nuclear Generating Station, Unit 2	PWR	193	10/13/1981	1,632	7.5	816.0
Seabrook Station, Unit 1	PWR	193	8/19/1990	1,236	5.4	618.0
Sequoyah Nuclear Plant, Unit 1	PWR	193	7/1/1981	2,091	9.8	1,045.5
Sequoyah Nuclear Plant, Unit 2	PWR	193	6/1/1982	See above (pool shared with Unit 1)		
Shearon Harris Nuclear Power Plant, Unit 1[f]	PWR	157	5/2/1987	1,128	6.2	564.0
South Texas Project, Unit 1	PWR	193	8/25/1988	1,969	9.2	984.5
South Texas Project, Unit 2	PWR	193	6/19/1989	1,969	9.2	984.5
Surry Nuclear Power Station, Unit 1	PWR	157	12/22/1972	1,044	4.6	522.0
Surry Nuclear Power Station, Unit 2	PWR	157	5/1/1973	See above (pool shared with Unit 1)		
Susquehanna Steam Electric Station, Unit 1	BWR	764	6/8/1983	2,840	2.7	528.2
Susquehanna Steam Electric Station, Unit 2	BWR	764	2/12/1985	2,840	2.7	528.2
Three Mile Island Nuclear Station, Unit 1	PWR	177	9/2/1974	1,062	5.0	531.0
Turkey Point Nuclear Generating Station, Unit 3	PWR	157	12/14/1972	1,535	8.8	767.5
Turkey Point Nuclear Generating Station, Unit 4	PWR	157	9/7/1973	1,535	8.8	767.5
Vermont Yankee Nuclear Power Plant, Unit 1[g]	BWR	368	11/30/1972	3,353	8.1	623.7
Virgil C. Summer Nuclear Station, Unit 1	PWR	157	1/1/1984	1,712	9.9	856.0
Vogtle Electric Generating Plant, Unit 1	PWR	193	6/1/1987	1,476	6.6	738.0
Vogtle Electric Generating Plant, Unit 2	PWR	193	5/20/1989	2,098	9.9	1,049.0
Waterford Steam Electric Station, Unit 3	PWR	217	9/24/1985	1,849	7.5	924.5

Table G-1. Capacity of Spent Fuel Pools for Operating Nuclear Power Reactors (cont'd)

Operating Reactors	Reactor Type	Core Size (assemblies)	Commercial Operation Start Date	Pool Capacity (assemblies)	Pool Capacity[(a)] (cores)	Estimated Pool Capacity[(b)] (MTU)
Watts Bar Nuclear Plant, Unit 1[(h)]	PWR	193	5/27/1996	1,386	6.2	693.0
Wolf Creek Generating Station, Unit 1	PWR	193	9/3/1985	2,363	11.2	1,181.5

Source: Reactor operating licenses, available through the NRC's website at http://www.nrc.gov/reactors/operating/list-power-reactor-units.html (NRC 2014a).

(a) Represents capacity with full core offload maintained; pool capacity (cores) is derived by subtracting one core's worth of assemblies from pool capacity (assemblies) and then dividing that number by core size (assemblies).
(b) Pool capacity (MTU) is derived by multiplying 500 kg (or 0.5 metric ton) per assembly for a PWR *or* 186 kg (0.186 metric ton) per assembly for a BWR by the number of assemblies in pool capacity.
(c) Plus 160 PWR assemblies.
(d) Plus 144 PWR assemblies.
(e) Brunswick Steam Electric Plant and H.B. Robinson Steam Electric Plant shipped to Shearon Harris Nuclear Power Plant.
(f) Shearon Harris is licensed to store 2,541 BWR fuel assemblies from other plants, in addition to its 1,128 PWR fuel assemblies.
(g) Entergy Nuclear Operations has certified that power operations will permanently cease in the fourth quarter of 2014 (Entergy 2013).
(h) Watts Bar Nuclear Plant, Unit 2 is under construction and would share the pool with Unit 1.

Table G-2. Capacity of Spent Fuel Pools for Power Reactors Under Construction

Operating Reactors	Reactor Type	Core Size (assemblies)	Commercial Operation Start Date	Pool Capacity (assemblies)	Pool Capacity[(a)] (cores)	Estimated Pool Capacity[(b)] (MTU)
Vogtle Electric Generating Plant, Unit 3	PWR	157	future	889	4.7	444.5
Vogtle Electric Generating Plant, Unit 4	PWR	157	future	889	4.7	444.5
Virgil C. Summer Nuclear Station, Unit 2	PWR	157	future	889	4.7	444.5
Virgil C. Summer Nuclear Station, Unit 3	PWR	157	future	889	4.7	444.5
Watts Bar Nuclear Plant, Unit 2[(c)]	PWR	193	future	Would share pool with Unit 1 (see Table G-1)		

Sources: Combined licenses for Vogtle Electric Generating Plant and Virgil C. Summer Nuclear Station are available through the NRC's website at http://www.nrc.gov/reactors/new-reactors/col/vogtle.html and http://www.nrc.gov/reactors/new-reactors/col/summer.html, respectively (NRC 2014b). For Watts Bar, information can be found at http://www.nrc.gov/info-finder/reactor/wb/watts-bar.html (NRC 2014c).

(a) Represents capacity with full core offload maintained; pool capacity (cores) is derived by subtracting one core's worth of assemblies from pool capacity (assemblies) and then dividing that number by core size (assemblies).

(b) Pool capacity (MTU) is derived by multiplying 500 kg (or 0.5 metric ton) per assembly (assumed for PWR) by the number of assemblies in pool capacity (889).

(c) The NRC staff anticipates a decision on the application for an operating license in 2015.

Table G-3. Capacity of In-Use Spent Fuel Pools for Decommissioning Facilities

Operating Reactors	Reactor Type	Core Size (assemblies)	Commercial Operation Start Date	Pool Capacity (assemblies)	Pool Capacity[(a)] (cores)	Est. Pool Capacity[(b)] (MTU)
Crystal River Nuclear Generating Plant, Unit 3	PWR	177	3/13/1977	1,474	7.3	737.0
Kewaunee Power Station	PWR	121	6/16/1974	1,205	9.0	602.5
Millstone Power Station, Unit 1	BWR	580	12/28/1970	2,959	4.1	550.4
San Onofre Nuclear Generating Station, Unit 2	PWR	217	8/8/1983	1,542	6.1	771.0
San Onofre Nuclear Generating Station, Unit 3	PWR	217	4/1/1984	1,542	6.1	771.0
Zion Nuclear Power Station, Unit 1	PWR	193	10/19/1973	3,012	14.6	1506.0
Zion Nuclear Power Station, Unit 2	PWR	193	11/14/1973	See above (pool shared with Unit 1)		

Sources: http://www.nrc.gov/info-finder/decommissioning/power-reactor (NRC 2014d); Duke 2013 (for Crystal River Nuclear Generating Plant); Dominion 2013 (for Kewaunee Power Station); Dominion 2011 (for Millstone Power Station); SCE 2013 (for San Onofre Nuclear Generating Station); and Commonwealth Edison 1993, 1998 (for Zion Nuclear Power Station).

(a) Represents capacity with full core offload maintained; pool capacity (cores) is derived by subtracting one core's worth of assemblies from pool capacity (assemblies) and then dividing that number by core size (assemblies).

(b) Pool capacity (MTU) is derived by multiplying 500 kg (or 0.5 metric ton) per assembly for a PWR *or* 186 kg (0.186 metric ton) per assembly for a BWR by the number of assemblies in pool capacity.

Table G-4. ISFSIs Operating Under Part 72 General License

Site	Initial Storage Date	Storage System		Associated Transportation Package[a]	Approved for High-Burnup Spent Fuel?[b]
		Vendor	Design		
Arkansas Nuclear One	12/17/1996	BNG Fuel Solutions	VSC-24	None	No
Arkansas Nuclear One	12/17/1996	Holtec International	HI-STORM	71-9261	No
Big Rock Point Nuclear Power Plant	11/18/2002	BNG Fuel Solutions	W-150	71-9276	No
Braidwood Station	11/23/2011	Holtec International	HI-STORM 100	71-9261	No
Browns Ferry Nuclear Plant	8/21/2005	Holtec International	HI-STORM 100S	71-9261	No
Brunswick Steam Electric Plant[c]	10/28/2010	Transnuclear, Inc.	NUHOMS	71-9302	Yes (T, S)
Byron Station	9/9/2010	Holtec International	HI-STORM 100S	71-9261	No
Catawba Nuclear Station	7/30/2007	NAC International, Inc.	NAC-UMS	71-9270	Yes (T, S)
Catawba Nuclear Station	5/7/2013	NAC International, Inc.	MAGNASTOR	Under Review	Yes (S)
Columbia Generating Station	9/2/2002	Holtec International	HI-STORM 100S	71-9261	No
Comanche Peak Steam Electric Station	2/28/2012	Holtec International	HI-STORM 100	71-9261	No
Donald C. Cook Nuclear Power Plant	8/1/2012	Holtec International	HI-STORM 100	71-9261	No
Cooper Nuclear Station	10/21/2010	Transnuclear, Inc.	NUHOMS	71-9302	Yes (T)
Davis-Besse Nuclear Power Station	1/1/1996	Transnuclear, Inc.	NUHOMS	None	No
Dresden Nuclear Power Station	7/10/2000	Holtec International	HI-STAR 100	71-9261	No
Dresden Nuclear Power Station	7/10/2000	Holtec International	HI-STORM 100	71-9261	No
Duane Arnold Energy Center	9/1/2003	Transnuclear, Inc.	NUHOMS	71-9302	Yes (T)
Fort Calhoun Station	7/29/2006	Transnuclear, Inc.	NUHOMS	71-9302	Yes (T)
Grand Gulf Nuclear Station	11/18/2006	Holtec International	HI-STORM 100S	71-9261	No
Haddam Neck	5/21/2004	NAC International, Inc.	NAC-MPC	71-9235	No
Edwin I. Hatch Nuclear Plant	7/6/2000	Holtec International	HI-STAR 100	71-9261	No

Table G-4. ISFSIs Operating Under Part 72 General License (cont'd)

Site	Initial Storage Date	Storage System		Associated Transportation Package[a]	Approved for High-Burnup Spent Fuel?[b]
		Vendor	Design		
Edwin I. Hatch Nuclear Plant	7/6/2000	Holtec International	HI-STORM 100/S	71-9261	No
Edwin I. Hatch Nuclear Plant	7/6/2000	Transnuclear, Inc.	NUHOMS	71-9302	Yes (T)
H.B. Robinson Steam Electric Plant	8/11/2005	Transnuclear, Inc.	NUHOMS	71-9302	Yes (T, S)
Hope Creek Generating Station	11/10/2006	Holtec International	HI-STORM 100	71-9261	No
Indian Point Nuclear Generating Plant	1/11/2008	Holtec International	HI-STORM 100	71-9261	No
James A. FitzPatrick Nuclear Power Plant	4/25/2002	Holtec International	HI-STORM 100/S	71-9261	No
Joseph M. Farley Nuclear Plant	8/25/2005	Holtec International.	HI-STORM 100S	71-9261	No
Kewaunee Power Station	8/22/2009	Transnuclear, Inc.	NUHOMS	71-9302	Yes (T)
La Crosse Boiling Water Reactor[c]	7/12/2012	NAC International, Inc.	NAC-MPC	71-9235	No
LaSalle County Station	11/1/2010	Holtec International	HI-STORM 100S	71-9261	No
Limerick Generating Station	8/1/2008	Transnuclear, Inc.	NUHOMS	71-9302	Yes (T, S)
Maine Yankee	8/24/2002	NAC International, Inc.	NAC-UMS	71-9270	Yes (T, S)
McGuire Nuclear Station	8/1/2013	NAC International, Inc.	MAGNASTOR	pending (71-9356)	Yes (T, S)
McGuire Nuclear Station	2/1/2001	Transnuclear, Inc.	TN Metal Casks	None	No
McGuire Nuclear Station	2/27/2001	NAC International, Inc.	NAC-UMS	71-9270	Yes (T, S)
Millstone Power Station	2/15/2005	Transnuclear, Inc.	NUHOMS	71-9302	Yes (T)
Monticello Nuclear Generating Plant	9/17/2008	Transnuclear, Inc.	NUHOMS	71-9302	Yes (T, S)
Nine Mile Point Nuclear Station	9/8/2012	Transnuclear, Inc.	NUHOMS	71-9302	Yes (T)
North Anna Power Station	3/10/2008	Transnuclear, Inc.	TN Metal Casks	None	No
North Anna Power Station	3/10/2008	Transnuclear, Inc.	NUHOMS-HD	71-9302	Yes (T, S)
Oconee Nuclear Station	3/5/1999	Transnuclear, Inc.	NUHOMS	None	Yes (S)
Oyster Creek Nuclear Generating	12/20/2001	Transnuclear, Inc.	NUHOMS	71-9302	Yes (T, S)

Table G-4. ISFSIs Operating Under Part 72 General License (cont'd)

Site	Initial Storage Date	Storage System		Associated Transportation Package[a]	Approved for High-Burnup Spent Fuel?[b]
		Vendor	Design		
Station					
Palisades Nuclear Plant	5/11/1993	EnergySolutions	VSC-24	None	No
Palisades Nuclear Plant	5/11/1993	Transnuclear, Inc.	NUHOMS	71-9302	Yes (T, S)
Palo Verde Nuclear Generating Station	3/15/2003	NAC International, Inc.	NAC-UMS	71-9270	Yes (T, S)
Peach Bottom Atomic Power Station	6/12/2000	Transnuclear, Inc.	TN Metal Casks	71-9293	No
Perry Nuclear Power Plant [c]	9/29/2012	Holtec International	HI-STORM 100	71-9261	No
Point Beach Nuclear Plant	5/26/1996	EnergySolutions	VSC-24	None	No
Point Beach Nuclear Plant	5/26/1996	Transnuclear, Inc.	NUHOMS	71-9302	Yes (T)
Quad Cities Nuclear Power Station	12/2/2005	Holtec International	HI-STORM 100S	71-9261	No
R.E. Ginna Nuclear Power Plant[c]	8/23/2010	Transnuclear, Inc.	NUHOMS	71-9302	Yes (T)
River Bend Station	12/29/2005	Holtec International	HI-STORM 100S	71-9261	No
St. Lucie Plant	3/21/2008	Transnuclear, Inc.	NUHOMS-HD	71-9302	Yes (T, S)
Salem Nuclear Generating Station	11/10/2006	Holtec International	HI-STORM 100	71-9261	No
San Onofre Nuclear Generating Station	10/3/2003	Transnuclear, Inc.	NUHOMS	71-9255	No
				71-9302	Yes (T)
Seabrook Station	8/7/2008	Transnuclear, Inc.	NUHOMS-HD	71-9302	Yes (T,S)
Sequoyah Nuclear Plant	7/1/2004	Holtec International	HI-STORM 100/S	71-9261	No
Surry Nuclear Power Station	8/6/2007	Transnuclear, Inc.	NUHOMS-HD	71-9302	Yes (T, S)
Susquehanna Steam Electric Station	10/18/1999	Transnuclear, Inc.	NUHOMS	71-9302	Yes (T, S)
Turkey Point Nuclear Generating Station	7/29/2011	Transnuclear, Inc.	NUHOMS-HD	71-9302	Yes (T, S)
Vermont Yankee Nuclear Power Plant	5/29/2008	Holtec International	HI-STORM 100	71-9261	No
Waterford Steam Electric Station	11/8/2011	Holtec International	HI-STORM 100	71-9261	No

Table G-4. ISFSIs Operating Under Part 72 General License (cont'd)

Site	Initial Storage Date	Storage System		Associated Transportation Package[a]	Approved for High-Burnup Spent Fuel?[b]
		Vendor	Design		
Yankee Rowe	6/26/2002	NAC International, Inc.	NAC-MPC	71-9235	No
Vogtle Electric Generating Plant	10/26/2013	Holtec International	HI-STORM 100S	71-9261	No
Zion Nuclear Power Station	1/9/2014	NAC International, Inc.	MAGNASTOR	pending (71-9356)	Yes (T, S)

Sources: NRC 2013a; UxC 2013; NRC 2013b; Greene et al. 2013; storage and transportation certificates of compliance available in the NRC's Agencywide Documents Access and Management System (ADAMS).

(a) A docket number in this column indicates that a storage system is in use at the site that has an associated transportation package certificate. Other systems may or may not be in use at the site that do not have associated transportation package certificates. Certified transportation packages could require additional NRC review under the NRC's transportation requirements in 10 CFR Part 71 before the packages may be used for transportation. Whether a transportation package requires additional NRC review is dependent on whether modifications to the design or the construction of the storage system have occurred since the NRC issued the initial certificates of compliance for storage under 10 CFR Part 72 and for transportation under 10 CFR Part 71. Additional NRC review of transportation packages or contents could also be required if so specified in the transportation certificate of compliance.

(b) An "S" in this column indicates that the storage system is approved for use with high-burnup fuel and a "T" indicates that the transportation package is approved for use with high-burnup fuel. A "No" in this column indicates that neither the storage system nor the transportation package has been approved for use with high-burnup fuel. This column does not indicate whether high-burnup fuel is actually in storage at the site.

(c) Initial storage dates for Brunswick Steam Electric Plant (Progress Energy 2010), R.E. Ginna Nuclear Power Plant (CENG 2010), La Crosse Boiling Water Reactor (Dairyland 2012), and Perry Nuclear Power Plant (FirstEnergy 2012) were obtained from licensee letters.

Table G-5. ISFSIs Operating Under Part 72 Specific Licenses

Site	License No.	Start Date	Expiration: Initial License	Expiration: Renewed License	Storage System: Vendor	Storage System: Design	Associated Transportation Package[a]	Approved for High-Burnup Spent Fuel?[b]
Calvert Cliffs Nuclear Power Plant	SNM–2505	11/25/1992	2012	NA	Transnuclear, Inc.	NUHOMS	None	No
Diablo Canyon Nuclear Power Plant	SNM–2511	3/22/2004	2024	NA	Holtec International	HI-STORM 100	71-9261	No
Fort St. Vrain	SNM–2504	11/4/1991	2011	2031	FW Energy Applications, Inc. or the U.S. Department of Energy	Foster Wheeler	None	Yes (S)
H.B. Robinson Steam Electric Plant, Unit 2	SNM–2502	8/13/1986	2006	2046	Transnuclear, Inc.	NUHOMS	71-9302	Yes (T, S)
Humboldt Bay	SNM–2514	11/30/2005	2025	NA	Holtec International	HI-STAR HB	71-9261	No
Idaho National Laboratory TMI-2 Fuel Debris	SNM–2508	3/19/1999	2019	NA	Transnuclear, Inc.	NUHOMS	None	No
Idaho Spent Fuel Facility[c]	SNM–2512	11/30/2004	2024	NA	Licensee: DOE (formerly Foster Wheeler Environmental Corporation)	Concrete Vault	None	No
Morris Operation (GE Hitachi)	SNM–2500	5/4/1982	2002	2022	NA	Wet storage	NA	No
North Anna Power Station Units 1 and 2	SNM–2507	6/30/1998	2018	NA	Transnuclear, Inc.	NUHOMS-HD	71-9302	Yes (T, S)
Oconee Nuclear Station, Units 1, 2, and 3	SNM-2503	1/29/1990	2010	2050	Transnuclear, Inc.	NUHOMS	None	Yes (S)

Table G-5. ISFSIs Operating Under Part 72 Specific Licenses (cont'd)

Site	License No.	Start Date	Expiration: Initial License	Expiration: Renewed License	Storage System: Vendor	Storage System: Design	Associated Transportation Package[a]	Approved for High-Burnup Spent Fuel?[b]
Prairie Island Nuclear Generating Plant	SNM–2506	10/19/1993	2013	NA	Transnuclear, Inc.	TN-40	71-9313	Yes (S)
Private Fuel Storage Facility[c]	SNM–2513	2/21/2006	2026	NA	Holtec International	HI-STORM 100	71-9261	No
Rancho Seco	SNM–2510	6/30/2000	2020	NA	Transnuclear, Inc.	NUHOMS	71-9302	Yes (T)
Surry Nuclear Power Station	SNM–2501	7/2/1986	2006	2046	General Nuclear	Castor	None	No
Surry Nuclear Power Station	SNM–2501	7/2/1986	2006	2046	NAC International, Inc.	NAC-I28	None	No
Surry Nuclear Power Station	SNM–2501	7/2/1986	2006	2046	Transnuclear, Inc.	NUHOMS-HD	71-9302	Yes (T, S)
Surry Nuclear Power Station	SNM–2501	7/2/1986	2006	2046	Westinghouse, Inc.	MC-10	None	No
Trojan	SNM–2509	3/31/1999	2019	NA	Holtec International	HI-STORM 100	71-9261	No

Sources: NRC 2013a; UxC 2013; NRC 2013b; Greene et al. 2013; storage and transportation certificates of compliance available in ADAMS; some information for Idaho National Laboratory TMI-2, the Private Fuel Storage facility, and Morris Operation obtained from additional sources: see DOE 2007 (for Idaho TMI-2 facility), NRC 2006 (for Private Fuel Storage), and NRC 2004 (for Morris).

(a) A docket number in this column indicates that a storage system is in use at the site that has an associated transportation package certificate. Other systems may or may not be in use at the site that do not have associated transportation package certificates. Certified transportation packages could require additional NRC review under the NRC's transportation requirements in 10 CFR Part 71 before the packages may be used for transportation. Whether a transportation package requires additional NRC review is dependent on whether modifications to the design or the construction of the storage system have occurred since the NRC issued the initial certificates of compliance for storage under Part 72 and for transportation under Part 71. Additional NRC review of transportation packages or contents could also be required if so specified in the transportation certificate of compliance.

(b) An "S" in this column indicates that the storage system is approved for use with high-burnup fuel and a "T" indicates that the transportation package is approved for use with high-burnup fuel. A "No" indicates that neither the storage system nor the transportation package has been approved for use with high-burnup fuel. This column does not indicate whether high-burnup fuel is actually in storage at the site.

(c) Private Fuel Storage Facility and Idaho Spent Fuel Facility were licensed but have not been constructed.

HTGR = high-temperature gas-cooled reactor; NA = Not applicable.

References

10 CFR Part 50. *Code of Federal Regulations*, Title 10, *Energy*, Part 50, "Domestic Licensing of Production and Utilization Facilities." Washington, D.C.

10 CFR Part 52. Code of Federal Regulations, Title 10, Energy, Part 52, "Licenses, Certifications, and Approvals for Nuclear Power Plants." Washington, D.C.

10 CFR Part 72. *Code of Federal Regulations*, Title 10, *Energy*, Part 72, "Licensing Requirements for the Independent Storage of Spent Nuclear Fuel, High-Level Radioactive Waste, and Reactor-Related Greater than Class C Waste." Washington, D.C.

CENG. 2010. Letter from T.L. Harding to NRC, dated September 16, 2010, regarding "General License 30-day Cask Registration Notification." Ontario, New York. Accession No. ML102670066.

Commonwealth Edison. 1993. *Zion Station Updated Final Safety Analysis Report.* Volume 3, Chicago, Illinois. Accession No. ML081370016.

Commonwealth Edison. 1998. Letter from R.S. Starkey to NRC, dated November 10, 1998, regarding "Submittal of Defueled Safety Analysis Report." Chicago, Illinois. Accession No. ML12300A258.

Dairyland (Dairyland Power Cooperative). 2012. Letter from J.B. McRill to NRC, dated July 12, 2012, regarding "Registration of Spent Fuel Dry Storage Cask in Use." LAC–14245, Genoa, Wisconsin. Accession No. ML12199A069.

DOE (U.S. Department of Energy). 2007. Letter from B.J. Davis to NRC, dated March 15, 2007, regarding "Submittal of Three Mile Island Unit 2 Independent Spent Fuel Storage Installation (TMI–2 ISFSI) Update Reports (Docket 72–20)." EM–FMDP–07–008, Idaho Falls, Idaho. Accession No. ML070820547.

Dominion (Dominion Energy Kewaunee, Inc.). 2013. Letter from D.G. Stoddard to NRC, dated May 14, 2013, regarding "Dominion Energy Kewaunee, Inc., Kewaunee Power Station Certification of Permanent Removal of Fuel from Reactor Vessel." Serial No. 13–293, Glen Allen, Virginia. Accession No. ML13135A209.

Dominion (Dominion Nuclear Connecticut, Inc.). 2011. *Millstone Power Station Unit 1 Defueled Safety Analysis Report.* Revision 8.0, Waterford, Connecticut. Accession No. ML11231A618.

Duke (Duke Energy). 2013. Letter from J.A. Franke to NRC, dated February 20, 2013, regarding "Crystal River Unit 3—Certification of Permanent Cessation of Power Operations and that Fuel Has Been Permanently Removed from the Reactor." 3F0213–07, Crystal River, Florida. Accession No. ML13056A005.

Entergy (Entergy Nuclear Operations, Inc.). 2013. Letter from M. Perito to NRC, dated September 23, 2013, regarding "Notification of Permanent Cessation of Power Operations." White Plains, New York. Accession No. ML13273A204.

FirstEnergy (First Energy Nuclear Operating Company). 2012. Letter from H.D. Hanson, Jr. to NRC, dated October 23, 2012, regarding "Spent Fuel Storage Cask Registration." L–12–383, Perry, Ohio. Accession No. ML12310A088.

Greene, S.R., J.S. Medford, and S.A. Macy. 2013. *Storage and Transport Cask Data for Used Commercial Nuclear Fuel—2013 U.S. Edition.* ATI-TR-13047, Knoxville, Tennessee. Available at http://curie.ornl.gov/content/storage-and-transport-cask-data-used-commercial-nuclear-fuel-2013-us-edition-0.

National Environmental Policy Act of 1969 (NEPA), as amended. 42 USC 4321 *et seq*.

NRC (U.S. Nuclear Regulatory Commission). 2004. Letter from J. Monninger to J.E. Ellis, dated December 21, 2004, regarding "Issuance of Renewed Materials License No. SNM–2500, Morris Operation Independent Spent Fuel Storage Operation." TAC No. L23091, Washington, D.C. Accession No. ML043630433.

NRC (U.S. Nuclear Regulatory Commission). 2006. Letter from W.H. Ruland to J.D. Parkyn, dated February 21, 2006, regarding "Issuance of Materials License No. SNM–2513 for the Private Fuel Storage Facility (TAC No. L23821)." Washington, D.C. Accession No. ML060450350.

NRC (U.S. Nuclear Regulatory Commission). 2013a. *2013-2014 Information Digest.* NUREG–1350, Volume 25, Washington, D.C. Accession No. ML13241A207.

NRC (U.S. Nuclear Regulatory Commission). 2013b. *Directory of Certificates of Compliance for Radioactive Materials Packages.* NUREG-0383, Volume 2, Revision 28, Washington, D.C. Accession No. ML13309A031.

NRC (U.S. Nuclear Regulatory Commission). 2014a. "Operating Reactors." Washington, D.C. Available at http://www.nrc.gov/reactors/operating/list-power-reactor-units.html.

NRC (U.S. Nuclear Regulatory Commission). 2014b. "Combined License Applications for New Reactors." Washington, D.C. Available at http://www.nrc.gov/reactors/new-reactors/col.html.

NRC (U.S. Nuclear Regulatory Commission). 2014c. "Watts Bar Unit 2 Reactivation." Washington. D.C. Available at http://www.nrc.gov/info-finder/reactor/wb/watts-bar.html.

NRC (U.S. Nuclear Regulatory Commission). 2014d. "Power Reactor Sites Undergoing Decommissioning." Washington, D.C. Available at http://www.nrc.gov/info-finder/decommissioning/.

Progress Energy. 2010. Letter from P.N. Mentel to NRC, dated November 18, 2010, regarding "Registration and Use of Casks to Store Spent Fuel and System Thermal Performance Assessment." BSEP 10–0135, Southport, North Carolina. Accession No. ML103330167.

SCE (Southern California Edison). 2013. Letter from P. Dietrich to NRC, dated June 12, 2013, regarding "Certification of Permanent Cessation of Power Operations, San Onofre Nuclear Generating Station Units 2 and 3." San Clemente, California. Accession No. ML131640201.

UxC (Ux Consulting Company, LLC). 2013. "Over 1700 Dry Storage Systems Deployed in the US." *StoreFUEL* 14(173):14–173, Roswell, Georgia.

Appendix H

Estimated Costs of Alternatives

Appendix H

Estimated Costs of Alternatives

This appendix provides the cost information upon which the U.S. Nuclear Regulatory Commission (NRC) bases the cost portion of its costs and benefits analysis in Chapter 7 of this *Generic Environmental Impact Statement for Continued Storage of Spent Nuclear Fuel* (GEIS). Tables H-1 through H-3 provide the estimated costs of site-specific licensing reviews for new reactors, reactor license renewals, and independent spent fuel storage installations (ISFSI), respectively, which are applicable to the NRC's potential options in case of no action. Table H-4 provides estimated costs for generic elements of the proposed action, as well as the NRC's potential options in case of no action, including costs for development of the GEIS, rulemaking, and a policy statement, as applicable. Finally, Table H-5 provides the total estimated costs for the proposed action and the NRC's options in case of no action.

Table H-1. Estimated Site-Specific Costs for New Reactor Reviews

Cost per Activity[a]	NRC Cost	Licensee Cost[b]	Total Cost[c]
First review	$1,650,000	$1,650,000	$3,290,000
Existing review with supplement	$981,000	$981,000	$1,960,000
New review	$49,800	$49,800	$99,600
Title 10 of the *Code of Federal Regulations* (CFR) Part 50 review with supplement	$232,000	$232,000	$465,000

Year	Activity[d]	Number	Constant 2014	3% Discount	7% Discount
2015	First review	1	$3,290,000	$3,200,000	$3,080,000
2015	Existing review with supplement	2	$3,930,000	$3,810,000	$3,670,000
2015	10 CFR Part 50 review with supplement	1	$465,000	$451,000	$434,000
2016	Existing review with supplement	3	$5,890,000	$5,550,000	$5,140,000
2017	Existing review with supplement	2	$3,930,000	$3,590,000	$3,200,000
2018	New review	2	$199,000	$177,000	$152,000
Sum[c]			**$17,700,000**	**$16,800,000**	**$15,700,000**

(a) As described in Chapter 7, the NRC estimates that, for new reactor reviews under 10 CFR Part 52, the first site-specific review of continued storage in a new reactor environmental impact statement (EIS) would require approximately 3.9 full-time equivalents (FTE) for NRC and $1 million in contractor support. The NRC estimates that subsequent site-specific reviews that require supplementation of existing EISs require approximately 2.9 FTE for NRC, or $481,000, and $500,000 in contract support. The NRC estimates that a review of the environmental impacts of continued storage for a new operating license under 10 CFR Part 50 will require 1.4 FTE, or $232,000.

(b) The NRC assumes that licensees incur costs that are equal to those incurred by the NRC, so the total cost is double the NRC's costs.

(c) Because of rounding, some costs may not appear to sum correctly.

(d) The NRC assumes that Levy, South Texas Project (Units 3 and 4), Comanche Peak (Units 3 and 4), Calvert Cliffs, Fermi (Unit 3), North Anna, Lee, and the PSE&G Power, LLC/PSE&G Nuclear, LLC Early Site Permit EISs all will require supplementation. One of these reviews will be the first review, and the others are labeled as existing reviews with supplements. Watts Bar 2 is the 10 CFR Part 50 review with supplementation. The NRC treats Turkey Point and Bell Bend as new reviews because the NRC is not likely to issue a draft EIS for either project by the end of fiscal year 2014; the NRC assumes that the environmental impacts of continued storage will be addressed within a normal review schedule for those projects.

Table H-2. Estimated Site-Specific Costs for Reactor License Renewals

Cost per Activity[a]		NRC Cost	Licensee Cost[b]	Total Cost[c]	
	First review	$415,000	$415,000	$830,000	
	Existing review with supplement	$232,000	$232,000	$465,000	
	Existing review without supplement	$183,000	$183,000	$365,000	
	New or subsequent renewal review	$49,800	$49,800	$99,600	
Year	**Activity[d]**	**Number**	**Constant 2014**	**3% Discount**	**7% Discount**
2015	First review	1	$830,000	$806,000	$776,000
2015	Existing review with supplement	2	$930,000	$903,000	$869,000
2016	Existing review with supplement	4	$1,860,000	$1,750,000	$1,620,000
2017	Existing review without supplement	3	$1,100,000	$1,000,000	$894,000
2017	Subsequent renewal	1	$99,600	$91,100	$81,300
2018	Renewal review	4	$398,000	$354,000	$304,000
2018	Subsequent renewal	1	$99,600	$88,500	$76,000
2019	Renewal review	3	$299,000	$258,000	$213,000
2019	Subsequent renewal	1	$99,600	$85,900	$71,000
2020	Renewal review	2	$199,000	$167,000	$133,000
2020	Subsequent renewal	1	$99,600	$83,400	$66,400
2021	Subsequent renewal	1	$99,600	$81,000	$62,000
2022	Subsequent renewal	1	$99,600	$78,600	$58,000
2023	Subsequent renewal	1	$99,600	$76,300	$54,200
2024	Subsequent renewal	1	$99,600	$74,100	$50,600
2025	Subsequent renewal	1	$99,600	$72,000	$47,300
2026	Subsequent renewal	1	$99,600	$69,900	$44,200
2027	Subsequent renewal	1	$99,600	$67,800	$41,300
2028	Subsequent renewal	1	$99,600	$65,800	$38,600
2029	Subsequent renewal	1	$99,600	$63,900	$36,100
2030	Subsequent renewal	1	$99,600	$62,100	$33,700
2031	Subsequent renewal	1	$99,600	$60,300	$31,500
2032	Subsequent renewal	1	$99,600	$58,500	$29,500

Table H-2. Estimated Site-Specific Costs for Reactor License Renewals (cont'd)

Year	Activity[d]	Number	Constant 2014	3% Discount	7% Discount
2033	Subsequent renewal	1	$99,600	$56,800	$27,500
2034	Subsequent renewal	1	$99,600	$55,100	$25,700
2035	Subsequent renewal	1	$99,600	$53,500	$24,100
2036	Subsequent renewal	1	$99,600	$52,000	$22,500
2037	Initial or subsequent renewal	1	$99,600	$50,500	$21,000
2038	Initial or subsequent renewal	1	$99,600	$49,000	$19,600
2039	Initial or subsequent renewal	1	$99,600	$47,600	$18,400
2040	Initial or subsequent renewal	1	$99,600	$46,200	$17,200
2041	Initial or subsequent renewal	1	$99,600	$44,800	$16,000
2042	Initial or subsequent renewal	1	$99,600	$43,500	$15,000
2043	Initial or subsequent renewal	1	$99,600	$42,300	$14,000
2044	Initial or subsequent renewal	1	$99,600	$41,000	$13,100
Sum[c]			**$8,400,000**	**$7,000,000**	**$5,870,000**

(a) As described in Chapter 7, the NRC assumes that the first review would require an estimated 2.5 FTE, or $415,000. The NRC further assumes that some reviews would require supplementation of existing EISs, and these reviews would require approximately 1.4 FTE, or $232,000. Reviews that do not require supplementation would require approximately 1.1 FTE, or $183,000. Reviews of future applications (those that have not yet been submitted) would require approximately 0.3 FTE, or $49,800.

(b) The NRC assumes that licensees incur costs that are equal to those incurred by the NRC, so the total cost is double the NRC's costs.

(c) Due to rounding, some costs may not appear to sum correctly.

(d) The NRC assumes that South Texas Project (Units 1 and 2), Grand Gulf, Callaway, Limerick, Davis-Besse, Seabrook, and Indian Point would require supplementation given current project schedules. One of these reviews would be the first review. The NRC assumes that Sequoyah, Byron, and Braidwood will be existing reviews that do not require supplements by the end of fiscal year 2014. Diablo Canyon, Waterford, Fermi (Unit 2), Riverbend, La Salle, Perry, Clinton, one facility in the STARS (Strategic Teaming and Resource Sharing) Alliance, and Watts Bar 1 are labeled as new license renewal reviews because the NRC will be able to address the environmental impacts of continued storage within a normal review schedule for those projects. The NRC has not identified specific plants that will seek subsequent license renewals, but estimates that half of the existing reactor fleet will do so.

Table H-3. Estimated Site-Specific Costs for ISFSI Licensing

	Cost per Activity[a]	NRC Cost	Licensee Cost[b]	Total Cost[c]	
	First renewal review	$83,000	$83,000	$166,000	
	Renewal review	$41,500	$41,500	$83,000	
Year	**Activity[d]**	**Number**	**Constant 2014**	**3% Discount**	**7% Discount**
2015	First renewal review	2	$332,000	$322,000	$310,000
2018	Renewal review	1	$83,000	$73,700	$63,300
2019	Renewal review	2	$166,000	$143,000	$118,000
2020	Renewal review	1	$83,000	$69,500	$55,300
2022	Renewal review	1	$83,000	$65,500	$48,300
2024	Renewal review	1	$83,000	$61,800	$42,200
2025	Renewal review	1	$83,000	$60,000	$39,400
2026	Renewal review	2	$166,000	$116,000	$73,700
2032	Renewal review	1	$83,000	$48,800	$24,600
Sum[c]			**$1,160,000**	**$961,000**	**$775,000**

(a) As discussed in Chapter 7, the NRC estimates that approximately 0.5 FTE, or $83,000, would be necessary to support site-specific consideration of continued storage in the first two ISFSI Environmental Assessments, both of which are currently under review. The NRC estimates that later ISFSI Environmental Assessments will require 0.25 FTE, or $41,500.
(b) The NRC assumes that licensees incur costs that are equal to those incurred by the NRC, so the total cost is double the NRC's costs.
(c) Due to rounding, some costs may not appear to sum correctly.
(d) Activity dates are based on license expiration dates. Currently, two site-specific ISFSI license renewal applications, Calvert Cliffs and Prairie Island, are docketed at the NRC. Therefore, the NRC assumes that these reviews will be the first reviews. Other site-specific ISFSI licenses that will expire during the 30-year analysis period are North Anna (2018), Three Mile Island Unit 2 (2019), Trojan (2019), Rancho Seco (2020), GE Morris (2022), Diablo Canyon (2024), Idaho Spent Fuel Facility (2025), Humboldt Bay (2026), Private Fuel Storage (2026), and Fort St. Vrain (2032). Other facilities with site-specific ISFSIs do not require renewal by 2044. See Appendix G for more information on ISFSIs.

Table H-4. Estimated Costs of Generic Elements[a]

GEIS Development (applies to proposed action and all options in case of no action except site-specific review) [b]			
	FTE[c]	**Contractor**	**Total**
Annual Cost	20.0	$3,000,000	$6,320,000
Year[c]	**Constant 2014**		
2013[e]	$6,420,000		
2014	$6,320,000		
Sum[f]	**$12,700,000**		
Rulemaking (applies to the Proposed Action) [b]			
	FTE[c]	**Contractor**	**Total**
Annual Cost	3.0	$0	$498,000
Year[c]	**Constant 2014**		
2013[e]	$506,000		
2014	$498,000		
Sum[f]	**$1,000,000**		
Policy Statement (Applies to the Policy Statement option) [d]			
	FTE[c]	**Contractor**	**Total**
Annual Cost	1.5	$0	$249,000
Year[c]	**Constant 2014**	**3% Discount**	**7% Discount**
2015	$249,000	$242,000	$233,000
2016	$249,000	$235,000	$217,000
Sum[f]	**$498,000**	**$476,000**	**$450,000**

(a) Generic elements are those portions of the alternatives that are not directly attributable to any site-specific review.
(b) The NRC assumes that the effort necessary to develop the GEIS and rule occurs during fiscal years 2013 and 2014. While these costs are technically past, or "sunk," costs, the NRC includes them here to provide a complete and transparent analysis of the costs of the proposed action and NRC's potential options in the case of no action. Finally, because costs of the GEIS and rulemaking are not future costs, the NRC does not discount them in this analysis.
(c) One FTE costs $166,000 based on data from fiscal year 2013 (the most recent available data).
(d) The NRC assumes that the effort necessary to develop the policy statement occurs during fiscal years 2015 and 2016 because, unlike the GEIS and rule, the NRC is not currently developing a policy statement.
(e) The NRC uses the Bureau of Labor Statistics' (BLS) Consumer Price Index (CPI) to adjust 2013 costs to 2014 dollars (BLS 2014).
(f) Due to rounding, some costs may not appear to sum correctly.

Table H-5. Total Estimated Costs of the Proposed Action and NRC's Options in Case of No Action

Proposed Action			
	Constant 2014		
GEIS	$12,700,000		
Rulemaking	$1,000,000		
Total Cost[a]	**$13,700,000**		
Site-Specific Review Option			
	Constant 2014	**3% Discount**	**7% Discount**
New reactor reviews	$17,700,000	$16,800,000	$15,700,000
Reactor license renewal	$8,400,000	$7,000,000	$5,870,000
ISFSI licensing	$1,210,000	$961,000	$755,000
Total Cost[a]	**$27,300,000**	**$24,700,000**	**$22,300,000**
GEIS-Only Option			
With No Cost Savings[b]	**Constant 2014**	**3% Discount**	**7% Discount**
New reactor reviews	$17,700,000	$16,800,000	$15,600,000
Reactor license renewal	$8,400,000	$7,000,000	$5,870,000
ISFSI licensing	$1,160,000	$961,000	$775,000
GEIS development	$12,700,000	$12,700,000	$12,700,000
Total Cost[a]	**$40,000,000**	**$37,500,000**	**$35,100,000**
With 50% Cost Savings[b]	**Constant 2014**	**3% Discount**	**7% Discount**
New reactor reviews	$8,850,000	$8,390,000	$7,840,000
Reactor license renewal	$4,200,000	$3,500,000	$2,930,000
ISFSI licensing	$581,000	$481,000	$388,000
GEIS development	$12,700,000	$12,700,000	$12,700,000
Total Cost[a]	**$26,400,000**	**$25,100,000**	**$23,900,000**
Policy Statement Option			
With No Cost Savings[b]	**Constant 2014**	**3% Discount**	**7% Discount**
New reactor reviews	$17,700,000	$16,800,000	$15,700,000
Reactor license renewal	$8,400,000	$7,000,000	$5,870,000
ISFSI licensing	$1,160,000	$961,000	$775,000
GEIS development	$12,700,000	$12,700,000	$12,700,000
Policy statement	$498,000	$476,000	$450,000
Total Cost[a]	**$40,500,000**	**$38,000,000**	**$35,500,000**

Table H-5. Total Estimated Costs of the Proposed Action and NRC's Options in Case of No Action (cont'd)

Policy Statement Option, cont'd			
50% Cost Savings[(b)]	**Constant 2014**	**3% Discount**	**7% Discount**
New reactor reviews	$8,850,000	$8,390,000	$7,840,000
Reactor license renewal	$4,200,000	$3,500,000	$2,930,000
ISFSI licensing	$581,000	$481,000	$388,000
GEIS development	$12,700,000	$12,700,000	$12,700,000
Policy statement	$498,000	$476,000	$450,000
Total Cost[(a)]	**$26,900,000**	**$25,600,000**	**$24,300,000**

(a) Due to rounding, some costs may not appear to sum correctly. Costs for the proposed action are not discounted because the proposed action includes no future costs.
(b) The NRC estimates that staff and applicants may reduce their efforts by as much as 50% compared to the site-specific review option in both the GEIS-only and policy statement options. While effort will vary in each review, the reliance on the GEIS (and policy statement) to address generic issues related to continued storage will entirely resolve concerns for some issues, while other issues may require additional effort in resolving comments, addressing site-specific litigation, or establishing that the GEIS findings are applicable to a specific licensing proceeding.

References

10 CFR Part 50. *Code of Federal Regulations*, Title 10, *Energy*, Part 50, "Domestic Licensing of Production and Utilization Facilities." Washington, D.C.

10 CFR Part 52. *Code of Federal Regulations*, Title 10, *Energy*, Part 52, "Licenses, Certifications, and Approvals for Nuclear Power Plants." Washington, D.C.

10 CFR Part 72. *Code of Federal Regulations*, Title 10, *Energy*, Part 72, "Licensing Requirements for the Independent Storage of Spent Nuclear Fuel, High-Level Radioactive Waste, and Reactor-Related Greater than Class C Waste." Washington, D.C.

BLS (U.S. Bureau of Labor Statistics). 2014. CPI Detailed Report—Data for March 2014. Washington, D.C. Available at http://www.bls.gov/cpi/cpid1403.pdf.

Appendix I

High-Burnup Fuel

Appendix I

High-Burnup Fuel

During the public comment period on the draft Generic Environmental Impact Statement (GEIS), the U.S. Nuclear Regulatory Commission (NRC) held 13 public meetings in various locations throughout the United States. During those meetings, numerous questions, concerns, and comments were raised about the use of high-burnup fuel at nuclear power plants. As a result of the public's interest in this topic, the NRC developed this appendix to provide background information about high-burnup fuel. The material is presented in a question and answer format.

Q. What does "burnup" mean?

A. Burnup is a measure of the fraction of fissionable atoms that can undergo the fission process. It can be expressed as a measure of the time a fuel assembly stays in the reactor core and how much energy is extracted from that nuclear fuel assembly. Burnup is typically expressed in units of gigawatt-days per metric ton of the initial amount of the uranium in the fuel (GWd/MTU).

Q. What is high-burnup fuel and how does it differ from low-burnup fuel?

A. High-burnup fuel is typically defined as fuel with a burnup (a measure of the time a fuel assembly stays in the reactor core) greater than 45 GWd/MTU. Low-burnup fuel is defined as any fuel with a lower exposure than this value. Average fuel burnups have increased from around 35 GWd/MTU two decades ago, to over 45 GWd/MTU today. High-burnup fuel is thermally hotter and more radioactive than low-burnup fuel for a given cooling time. The difference in decay heat (a function of the fuel transferring heat to decrease its temperature over time) and radioactive source term depends on the difference in the fuel burnup (i.e., how long the fuel was being used in the reactor), the initial enrichment of the fuel, and the irradiation environment that the fuel was exposed to in the reactor. High-burnup fuel is typically cooled longer than low-burnup fuel before it can be placed into a dry storage system. How much longer depends on the difference in burnup, the specific dry storage system design, and the decay heat loading pattern of the fuel being used.

Q. ***How is mixed oxide (MOX) fuel different from uranium oxide (UOX) fuel?***

A. As explained in Chapter 2 of the GEIS, mixed oxide (MOX) fuel is a type of nuclear reactor fuel that contains plutonium oxide mixed with either natural or depleted uranium oxide in the form of ceramic pellets. MOX fuel is not currently being produced in the United States;

however, an application is pending before the NRC for a MOX fuel fabrication facility. The mechanical design of MOX fuel is very similar to UOX fuel used in existing light water reactors. The planned MOX fuel also is intended for use in existing light water reactors in the United States. As with high-burnup UOX fuel, MOX fuel has higher thermal output and different radionuclide composition that needs to be considered in storage system design, operations, and maintenance.

Q. How is high-burnup fuel licensed for reactor operations by the NRC?

A. In reactor licensing and operations, the question of fuel burnup is addressed in reactor fuel system design safety reviews. The NRC uses the guidance in NUREG-0800 (Section 4.2, "Fuel System Design") (NRC 1987) when conducting these safety reviews. The reactor fuel system consists of numerous components including arrays (i.e., assemblies or bundles) of fuel rods, fuel pellets, insulator pellets, and tubular cladding. During reactor fuel system design safety reviews, the NRC evaluates the nuclear, thermal, mechanical, and materials design of the fuel system. These reviews provide assurance that (1) the fuel system is not damaged as a result of normal operations and anticipated operational occurrences, (2) fuel system damage is never so severe as to prevent control rod insertion when it is required, (3) the number of fuel rod failures is not underestimated for postulated accidents, and (4) coolability is always maintained. Fuel burnup is one of several fuel design operating limits established to ensure fuel reliability and acceptable performance during normal operations, anticipated operational occurrences, and postulated accidents. Fuel system design safety reviews consider the effects of burnup levels on the nuclear, thermal, mechanical, and materials design of the fuel system. For example, in a fuel system safety review, fuel rod failure criteria consider the high-burnup effects on overheating of fuel pellets. As a result, NRC acceptance of a reactor fuel design includes the fuel design's burnup operating limits. In addition, the NRC evaluates the environmental impacts of the agency's actions in accordance with the National Environmental Policy Act of 1969.

Q. What happens to the high-burnup fuel after its use in a reactor?

A. When any fuel is no longer suitable for use in the reactor, it is placed in a spent fuel pool where it is stored at least until it is cool enough that it can be transferred to dry storage. Data collected to date suggest very little or no degradation of the spent fuel in the pools as long as the water chemistry is maintained. The dry cask storage system receives a Certificate of Compliance from the NRC before it can be used for storing spent fuel. The behavior of the high-burnup fuel and the consequences of its potential degradation are thoroughly evaluated against standards for criticality, thermal, containment, and shielding safety along with the ability to safely retrieve it from storage before the NRC issues the Certificate of Compliance.

Q. Can high-burnup fuel be stored in dry cask storage systems?

A. As indicated above, when spent fuel is removed from a reactor, it is first stored in a spent fuel pool where it cools. After the spent fuel has cooled sufficiently so that its decay heat and radiation will not significantly damage the fuel itself or the storage components, the fuel can be transferred to a dry cask storage system. High-burnup fuel must be cooled longer than low-burnup fuel before it can be placed into a dry cask storage system. How much longer depends on the difference in burnup, the specific dry cask storage system design, and the decay heat loading pattern of the fuel being used. For example, for a 5.0 weight-percent enriched (in uranium-235) fuel assembly in one particular storage system, the required cooling time goes from 4.5, to 7, to 12 years, for fuel burnups of 35,000, 45, and 55 GWd/MTU, respectively. There are three types of dry cask storage systems for spent nuclear fuel (spent fuel):

- Storage-only systems that have not been approved for transportation.
- Dual-purpose systems that are designed for both storage and transport. Most of these systems have been approved for storage of high-burnup fuel only, but some also have been approved for transport of high-burnup fuel.
- Canister systems in which the canister may or may not be put into a new overpack for transport.

NRC regulations allow for the approval of spent fuel storage in dry casks for a period up to 40 years. While there is no indication that high-burnup fuel cannot be stored for the full 40 years, the NRC has only approved the storage of high-burnup fuel for 20 years. The 20-year period allows for earlier consideration of the increasing operational experience with and investigations of high-burnup fuel. A list of NRC-certified storage casks and transportation casks for high-burnup spent fuel is provided in Appendix G.

Q. How does dry cask storage of high-burnup fuel differ from low-burnup fuel?

A. Dry cask storage systems need to comply with NRC's regulations at 10 CFR Part 72. Based on research on the behavior of high-burnup spent fuel, the NRC has issued guidance for the conditions under which the fuel can be stored without expecting it to degrade in an unsafe manner (e.g., cladding temperature is limited to 400°C (752°F) for normal conditions of storage and short-term loading operations, the atmosphere is dry and inert). Cask design and loading configuration are used to meet requirements for the cask thermal load. Although high-burnup fuel most recently discharged from the reactor presents the largest thermal load, casks are typically loaded with spent fuel of different discharge times and potentially different burnup (i.e., loaded into different "zones" within the casks) so that the hottest assemblies are not all placed in a single cask. For example, the pressurized water reactor fuel qualification tables for NUHOMS-24PHB dry storage casks specify minimum

cooling times of 17 years (zone 1), 7.5 years (zone 2), and 6 years (zone 3) for spent fuel with 45 GWd/MTU burnup (based on 4 percent assembly average initial U-235 enrichment) compared to cooling times of 29.2 years (zone 1), 13.2 years (zone 2), and 7.6 years (zone 3) for spent fuel with 55 GWd/MTU burnup fuel (Transnuclear Inc. 2009). Whatever the thermal output or radiation flux of the spent fuel placed in the container, the loading must be consistent with the cask certificate and comply with the regulations.

The heat and radiation flux from any spent fuel assembly will vary as a function of initial enrichment, burnup, and time since the assembly was removed from the reactor. As a result of higher initial enrichment and longer service life in the reactor, high-burnup spent fuel has higher radioactivity and thermal output compared to low-burnup spent fuel.

In 2011, the International Atomic Energy Agency (IAEA) published a report that provides information on the thermal output and radiation flux for UOX fuel as a function of burnup and decay after discharge from the reactor (IAEA 2011). Table I-1 and Table I-2 provide values estimated from curves presented in the IAEA report for the thermal output and the neutron flux. Based on Table I-1, high-burnup fuel (55 GWd/MTU) after 15 years of decay has thermal output similar to 30 GWd/MTU fuel after 5 years of decay. High-burnup fuel also has increased neutron flux that could affect the thickness needed for the concrete overpack to reduce the neutron flux near the dry cask storage system. Based on Table I-2, high-burnup fuel (55 GWd/MTU) after 60 years of decay has a neutron flux similar to 30 GWd/MTU fuel after approximately 15 years of decay.

Table I-1. Dependence of decay heat (kW/MTU) on burnup and decay time for UOX fuel

Decay Time	Burnup 30 GWd/MTU	Burnup 45 GWd/MTU	Burnup 55 GWd/MTU	Burnup 70 GWd/MTU
5 years	1.6 kW/MTU	2.3	2.8	3.5
15 years	0.9	1.3	1.6	2.2
60 years	0.4	0.5	0.7	0.9
200 years	0.2	0.2	0.2	0.3

Source: IAEA 2011. Values are estimated from Figure 13 of the report.

Table I-2. Dependence of neutron emission on burnup and cooling year for UOX fuel

Decay Time	Burnup 30 GWd/MTU	Burnup 45 GWd/MTU	Burnup 55 GWd/MTU	Burnup 70 GWd/MTU
5 years	0.25	0.6	0.9	1.4
15 years	0.2	0.4	0.6	1.0
60 years	0.01	0.1	0.15	0.2
200 years	NS	NS	NS	NS

Source: IAEA 2011. Values were estimated from Table 15 of the report.
Neutron emissions in Giga neutrons per second per metric tons of uranium (Gn/s/ MTU).
NS = not significant. Values were too small to determine from Figure 15 (i.e., <0.01).

Q. How do degradation processes affect storage of high-burnup spent fuel?

A. As storage times have increased, so has interest in improving the understanding of degradation mechanisms that affect spent fuel as it is stored. Recent reports have identified a variety of degradation mechanisms and discussed the potential effects on storage (e.g., NRC 2012, Hanson et al. 2012, IAEA 2011, and Sindelar et al. 2011).

The mechanical integrity of the spent fuel cladding and assembly is important for ensuring that handling and transportation of spent fuel can be conducted with relative ease. The mechanical designs of lower-burnup UOX fuel and higher-burnup UOX and MOX fuel are very similar, but some of the after-irradiation properties of higher-burnup UOX and MOX fuel are potentially significant in determining the rate of degradation or differences in performance. Examples of the differences in after-irradiation properties between lower-burnup UOX fuel and higher-burnup UOX and MOX fuel include higher fuel rod internal pressures and thinner cladding due to more cladding oxidation and hydride layer buildup causing higher cladding stress; higher decay heat; higher specific activity; and finer grain structure of the fuel pellet, which potentially would increase the source term in the event of an accident.

The IAEA has provided a useful perspective on the impact of degradation processes for both wet and dry storage systems:

> *"Because wet storage is associated with low temperatures, cladding degradation is expected to be low. High-burnup UOX and MOX storage will increase the heat load, and potentially radioactive releases. This may require an upgrade of the pool facility with respect to heat removal and pool cleanup systems, and additional neutron poison material in the pool water or in storage racks. Re-evaluation of criticality and regulatory aspects may also be required. In dry storage and transportation, the cask has to provide safe confinement/containment. In parallel, the decay heat has to be removed to limit temperature induced material alterations. Thus, dry storage is more sensitive to increased UOX burnup and MOX use than wet storage because of higher temperatures resulting in higher stresses on the cladding. The ability to meet applicable regulatory limits will need to be re-evaluated for higher burnup UOX and MOX on a case by case basis. Sub-criticality during transportation has to be ensured even under accident conditions, such as, for example, cask drop. Higher burnup fuel may have significantly more hydrogen in the cladding and structure and, thus, reduced ductility. Since MOX fuel has a similar design to UOX fuel, its mechanical behaviour should not be different. The result of these evaluations for storage and transportation may require a redesign of the cask heat removal and shielding systems, redesign of the structural support for the spent fuel assemblies, a decrease in the number of spent fuel assemblies that can be placed into a single storage cask, and an increased decay time in the pool prior to placement in dry storage."* (IAEA 2011)

The NRC continues to follow international and national efforts on degradation mechanisms, and is conducting its own, NRC-funded studies to ensure that its understanding of these processes is sufficient and to use the increasing information and operational experience with storage, handling, and transportation of spent fuel to confirm the adequacy of or make any necessary changes to the regulatory framework.

Q. Can high-burnup fuel be transported?

A. Yes. The NRC has certified transportation packages for the transport of spent fuel, and some of these packages have been authorized to carry high-burnup fuel. The NRC approves designs only after a full safety review. Based on these reviews, the NRC has certified package designs to transport high-burnup fuel currently in storage at ISFSIs including, for example, the NAC-UMS, HI-STAR 100, and MP-197. Transportation of spent fuel would be accomplished in accordance with NRC regulations (i.e., 10 CFR Parts 20 and 71) and applicable U.S. Department of Transportation requirements. A list of NRC-certified storage casks and transportation casks for high-burnup spent fuel is provided in Appendix G.

Q. Is the NRC doing any research on high-burnup fuel?

A. Yes, the NRC has a number of recently completed or in-progress research projects on high-burnup fuel.

1) *Effects of hydride reorientation on the ductility of the cladding*. This recently competed project conducted at Argonne National Laboratory, showed that, hydride reorientation will occur to some extent under many conditions of storage, with the degree depending on the cladding material, cold work, stress, hydrogen content, and maximum temperature. The research indicated that, if the cladding remains above the ductile to brittle transition temperature, it should be ductile. Below that temperature, the cladding must be considered to be potentially brittle. The U.S. Department of Energy (DOE) is continuing this research.

2) *Effects of transportation vibrations on the integrity of high-burnup fuel cladding*. Preliminary results from this research project, being conducted at Oak Ridge National Laboratory, shows that Zircaloy-4 cladding of high-burnup fuel should not fail under normal transportation road or rail vibration loads. This research is expected to be completed in 2014, then will be continued by the DOE on other fuel rod cladding materials.

3) *Stress loads on the cladding*. While stress due to gases in the high-burnup fuel rods has been shown to be insufficient to cause a thermal low-temperature creep or delayed hydride cracking, stress also could be exerted by swelling of the pellets over time due to

the internal generation of helium due to fission product decay. Laboratory studies have shown this would not be expected to occur until after 100 years of storage. The NRC is conducting an evaluation on the potential cladding stress due to pellet swelling to determine if further research is necessary to rule this out as a plausible degradation mechanism.

While all available data has shown that high-burnup fuel can be safely stored, the NRC is following the cask demonstration project, which will look for early signs of fuel degradation. The NRC will independently evaluate data obtained from this DOE demonstration so it is in a position to make changes to its regulatory framework, if necessary.

Q. How is high-burnup fuel considered in the GEIS?

A. The environmental impacts described in the GEIS do not require separate consideration of high-burnup fuel because the unique characteristics of high-burnup fuel are not a factor in environmental impact assessment for the resource areas considered.

As discussed in Section 2.1.1.3, the use of high-burnup fuel could create less spent fuel than a facility that uses low-burnup fuel, while providing the same energy output. Therefore, for most resource areas evaluated in the GEIS, the impacts of storing high-burnup fuel would be the same as or slightly less than the impacts associated with storing low-burnup fuel. This is primarily because storing less spent fuel would require less land. This result is consistent with earlier published analyses of the environmental effects of high-burnup fuel (Ramsdell et al. 2001) that included the impacts from handling accidents, transportation, and onsite storage in support of environmental assessments of operating nuclear power plants.

References

10 CFR Part 20. *Code of Federal Regulations*, Title 10, *Energy,* Part 20, “Standards for Protection Against Radiation.” Washington, D.C.

10 CFR Part 71. *Code of Federal Regulations*, Title 10, *Energy*, Part 71, “Packaging and Transportation of Radioactive Material.” Washington, D.C.

10 CFR Part 72. *Code of Federal Regulations*, Title 10, *Energy,* Part 72, “Licensing Requirements for the Independent Storage of Spent Nuclear Fuel, High-Level Radioactive Waste, and Reactor-Related Greater than Class C Waste.” Washington, D.C.

Hanson, B., H. Alsaed, C. Stockman, D. Enos, R. Meyer, and K. Sorenson. 2012. *Gap Analysis to Support Extended Storage of Used Nuclear Fuel Rev. 0*. U.S. Department of Energy Report No. FCRD-USED-2011-000136 Rev. 0, Richland, Washington. Available at http://energy.gov/sites/prod/files/Gap%20Analysis%20Rev%200%20Final.pdf.

IAEA (International Atomic Energy Agency). 2011. *Impact of High Burnup Uranium Oxide and Mixed Uranium–Plutonium Oxide Water Reactor Fuel on Spent Fuel Management.* IAEA Nuclear Energy Series No. NF-T-3.8, Vienna, Austria. Available at http://www-pub.iaea.org/MTCD/Publications/PDF/Pub1490_web.pdf.

National Environmental Policy Act of 1969 (NEPA), as amended. 42 USC 4321 *et seq*.

NRC (U.S. Nuclear Regulatory Commission). 1987. *Standard Review Plan for the Review of Safety Analysis Reports for Nuclear Power Plants: LWR Edition*. NUREG-800, Revision 2, Washington, D.C. Accession No. ML070810350.

NRC (U.S. Nuclear Regulatory Commission). 2012. *Identification and Prioritization of the Technical Information Needs Affecting Potential Regulation of Extended Storage and Transportation of Spent Nuclear Fuel: Draft Report for Comment.* Washington, D.C. Accession No. ML120580143.

Ramsdell, J.V., Jr., C.E. Beyer, D.D. Lanning, U.P. Jenquin, R.A. Schwarz, D.L. Strenge, P.M. Daling, and R.T. Dahowski. 2001. *Environmental Effects of Extending Fuel Burnup Above 60 GWd/MTU.* NUREG/CR-6703, Pacific Northwest National Laboratory, Richland, Washington. Accession No. ML010310298.

Sindelar, R.L., A.J. Duncan, M.E. Dupont, P.-S. Lam, M.R. Louthan, Jr., and T.E. Skidmore. 2011. *Materials Aging Issues and Aging Management for Extended Storage and Transportation of Spent Nuclear Fuel.* NUREG/CR–7116, Savannah River National Laboratory, Aiken, South Carolina. Accession No. ML11321A182.

Transnuclear Inc. 2009. *Technical Specifications: TransNuclear Inc. Standardized NUHOMS Horizontal Modular Storage System Certificate of Compliance No. 1004, Amendment No. 10*. Docket 72-1004, Columbia, Maryland. Accession No. ML092290186.

NRC FORM 335
(12-2010)
NRCMD 3.7

U.S. NUCLEAR REGULATORY COMMISSION

BIBLIOGRAPHIC DATA SHEET

(See instructions on the reverse)

1. REPORT NUMBER
(Assigned by NRC, Add Vol., Supp., Rev., and Addendum Numbers, if any.)
NUREG-2157, Volume 1
FINAL

2. TITLE AND SUBTITLE
Generic Environmental Impact Statement for Continued Storage of Spent Nuclear Fuel - Final Report and Public Comments

3. DATE REPORT PUBLISHED

MONTH	YEAR
September	2014

4. FIN OR GRANT NUMBER

5. AUTHOR(S)
U.S. NRC

6. TYPE OF REPORT
Technical

7. PERIOD COVERED (Inclusive Dates)

8. PERFORMING ORGANIZATION - NAME AND ADDRESS (If NRC, provide Division, Office or Region, U. S. Nuclear Regulatory Commission, and mailing address; if contractor, provide name and mailing address.)
Waste Confidence Directorate
Office of Nuclear Material Safety and Safeguards
U.S. Nuclear Regulatory Commission
Washington, DC 20555-0001

9. SPONSORING ORGANIZATION - NAME AND ADDRESS (If NRC, type "Same as above", if contractor, provide NRC Division, Office or Region, U. S. Nuclear Regulatory Commission, and mailing address.)
Same as above

10. SUPPLEMENTARY NOTES

11. ABSTRACT (200 words or less)
This Generic Environmental Impact Statement for Continued Storage of Spent Nuclear Fuel (GEIS) examines the potential environmental impacts that could occur as a result of the continued storage of spent nuclear fuel at at-reactor and away-from-reactor sites until a repository is available. For the resource areas considered, this GEIS attempts to establish generic impact determinations that would be applicable to a wide range of existing and potential future spent fuel storage sites. While some site-specific information is used in developing the generic impact determinations, the NRC does not intend for this GEIS to replace the NEPA analysis associated with any individual licensing action. This GEIS makes maximum use of existing environmental impact determinations, site-specific data, publicly available literature, and public comments received.

This GEIS evaluated alternatives to the proposed action, including options under the no-action alternative (site-specific licensing review, a GEIS-only option, and a policy statement). The proposed action would have the same potential environmental impacts as any of the alternatives evaluated. However, as shown in quantitative analysis of costs, the cost for the proposed action is less than the cost for any of the alternatives.

12. KEY WORDS/DESCRIPTORS (List words or phrases that will assist researchers in locating the report.)
EIS, GEIS, environmental impact statement, NEPA, national environmental policy act, waste confidence, waste confidence decision, waste confidence rule, continued storage

13. AVAILABILITY STATEMENT
unlimited

14. SECURITY CLASSIFICATION
(This Page)
unclassified
(This Report)
unclassified

15. NUMBER OF PAGES

16. PRICE

Printed
on recycled
paper

Federal Recycling Program

UNITED STATES
NUCLEAR REGULATORY COMMISSION
WASHINGTON, DC 20555-0001

OFFICIAL BUSINESS

NUREG-2157, Vol. 1
Final

Generic Environmental Impact Statement for
Continued Storage of Spent Nuclear Fuel

September 2014

United States Nuclear Regulatory Commission

Protecting People and the Environment

NUREG-2157
Volume 2

Generic Environmental Impact Statement for Continued Storage of Spent Nuclear Fuel

Final Report
Public Comments

Office of Nuclear Material Safety and Safeguards

AVAILABILITY OF REFERENCE MATERIALS IN NRC PUBLICATIONS

NRC Reference Material

As of November 1999, you may electronically access NUREG-series publications and other NRC records at NRC's Public Electronic Reading Room at http://www.nrc.gov/reading-rm.html. Publicly released records include, to name a few, NUREG-series publications; *Federal Register* notices; applicant, licensee, and vendor documents and correspondence; NRC correspondence and internal memoranda; bulletins and information notices; inspection and investigative reports; licensee event reports; and Commission papers and their attachments.

NRC publications in the NUREG series, NRC regulations, and Title 10, "Energy," in the *Code of Federal Regulations* may also be purchased from one of these two sources.

1. The Superintendent of Documents
   U.S. Government Printing Office
   Mail Stop SSOP
   Washington, DC 20402–0001
   Internet: bookstore.gpo.gov
   Telephone: 202-512-1800
   Fax: 202-512-2250
2. The National Technical Information Service
   Springfield, VA 22161–0002
   www.ntis.gov
   1–800–553–6847 or, locally, 703–605–6000

A single copy of each NRC draft report for comment is available free, to the extent of supply, upon written request as follows:
Address: U.S. Nuclear Regulatory Commission
Office of Administration
Publications Branch
Washington, DC 20555-0001
E-mail: DISTRIBUTION.RESOURCE@NRC.GOV
Facsimile: 301–415–2289

Some publications in the NUREG series that are posted at NRC's Web site address http://www.nrc.gov/reading-rm/doc-collections/nuregs are updated periodically and may differ from the last printed version. Although references to material found on a Web site bear the date the material was accessed, the material available on the date cited may subsequently be removed from the site.

Non-NRC Reference Material

Documents available from public and special technical libraries include all open literature items, such as books, journal articles, transactions, *Federal Register* notices, Federal and State legislation, and congressional reports. Such documents as theses, dissertations, foreign reports and translations, and non-NRC conference proceedings may be purchased from their sponsoring organization.

Copies of industry codes and standards used in a substantive manner in the NRC regulatory process are maintained at—
The NRC Technical Library
Two White Flint North
11545 Rockville Pike
Rockville, MD 20852–2738

These standards are available in the library for reference use by the public. Codes and standards are usually copyrighted and may be purchased from the originating organization or, if they are American National Standards, from—
American National Standards Institute
11 West 42nd Street
New York, NY 10036–8002
www.ansi.org
212–642–4900

Legally binding regulatory requirements are stated only in laws; NRC regulations; licenses, including technical specifications; or orders, not in NUREG-series publications. The views expressed in contractor-prepared publications in this series are not necessarily those of the NRC.

The NUREG series comprises (1) technical and administrative reports and books prepared by the staff (NUREG–XXXX) or agency contractors (NUREG/CR–XXXX), (2) proceedings of conferences (NUREG/CP–XXXX), (3) reports resulting from international agreements (NUREG/IA–XXXX), (4) brochures (NUREG/BR–XXXX), and (5) compilations of legal decisions and orders of the Commission and Atomic and Safety Licensing Boards and of Directors' decisions under Section 2.206 of NRC's regulations (NUREG–0750).

DISCLAIMER: This report was prepared as an account of work sponsored by an agency of the U.S. Government. Neither the U.S. Government nor any agency thereof, nor any employee, makes any warranty, expressed or implied, or assumes any legal liability or responsibility for any third party's use, or the results of such use, of any information, apparatus, product, or process disclosed in this publication, or represents that its use by such third party would not infringe privately owned rights.

United States Nuclear Regulatory Commission

Protecting People and the Environment

NUREG-2157
Volume 2

Generic Environmental Impact Statement for Continued Storage of Spent Nuclear Fuel

Final Report
Public Comments

Manuscript Completed: August 2014
Date Published: September 2014

Waste Confidence Directorate
Office of Nuclear Material Safety and Safeguards
U.S. Nuclear Regulatory Commission
Washington, D.C. 20555-0001

COVER SHEET

Responsible Agency: U.S. Nuclear Regulatory Commission, Office of Nuclear Material Safety and Safeguards

Title: NUREG–2157, Generic Environmental Impact Statement for Continued Storage of Spent Nuclear Fuel – Final Report, Volumes 1 and 2

For additional copies or questions about this Generic Environmental Impact Statement, contact:

Sarah Lopas
NEPA Communications Project Manager

Phone: 1-800-368-5642, extension 287-0675

Email: Sarah.Lopas@nrc.gov

U.S. Nuclear Regulatory Commission
Office of Nuclear Material Safety and Safeguards
Waste Confidence Directorate
Mail Stop 3WFN 14-C64
11555 Rockville Pike
Rockville, Maryland 20852

Abstract

This *Generic Environmental Impact Statement for Continued Storage of Spent Nuclear Fuel* (GEIS) generically determines the environmental impacts of continued storage, including those impacts identified in the remand by the Court of Appeals in the *New York v. NRC* decision, and provides a regulatory basis for a revision to 10 CFR 51.23 that addresses the environmental impacts of continued storage for use in future NRC environmental reviews. In this context, "the environmental impacts of continued storage" means those impacts that could occur as a result of the storage of spent nuclear fuel at at-reactor and away-from-reactor sites after a reactor's licensed life for operation and until a permanent repository becomes available. The GEIS evaluates potential environmental impacts to a broad range of resources. Cumulative impacts are also analyzed.

Because the timing of repository availability is uncertain, the GEIS analyzes potential environmental impacts over three possible timeframes: a short-term timeframe, which includes 60 years of continued storage after the end of a reactor's licensed life for operation; an additional 100-year timeframe (60 years plus 100 years) to address the potential for delay in repository availability; and a third, indefinite timeframe to address the possibility that a repository never becomes available. All potential impacts in each resource area are analyzed for each continued storage timeframe.

The GEIS contains several appendices that discuss specific topics of particular interest, including the technical feasibility of continued storage and repository availability as well as the two technical issues involved in the remand of *New York v. NRC*—spent fuel pool leaks and spent fuel pool fires. Finally the GEIS contains NRC's responses to public comments on the draft GEIS and proposed Rule and in doing so provides additional technical background on, and explanation of, the GEIS's analyses and conclusions.

The GEIS also discusses the NRC's Federal action—the adoption of a revised Rule, 10 CFR 51.23, to codify (i.e., adopt into regulation) the analysis in the GEIS of the environmental impacts of continued storage of spent fuel—and the options the NRC could take under the no-action alternative.

Contents

Abstract iii
Figures xix
Tables xxi
Executive Summary xxiii
Abbreviations/Acronyms lxvii
Units of Measure lxxi
1.0 Introduction 1-1
1.1 History of Waste Confidence 1-1
1.2 Scope of the Generic Environmental Impact Statement 1-4
1.3 Purpose of the Generic Environmental Impact Statement 1-5
1.4 Proposed Federal Action 1-5
1.5 Purpose of and Need for the Proposed Action 1-6
1.6 Alternatives 1-6
1.6.1 No-Action Alternative 1-6
1.6.1.1 Site-Specific Review Option 1-7
1.6.1.2 GEIS-Only Option 1-8
1.6.1.3 Policy-Statement Option 1-8
1.6.2 Alternatives Considered but Eliminated 1-9
1.6.2.1 Cessation of Licensing or Cessation of Reactor Operation 1-9
1.6.2.2 Implementing Additional Regulatory Requirements 1-10
1.6.3 Comparison of Reasonable Alternatives 1-10
1.7 Public and Agency Involvement 1-11
1.7.1 Scoping Process 1-11
1.7.2 Public Comments Received on the Draft GEIS and Proposed Rule 1-12
1.7.3 Cooperating Agencies 1-12
1.8 Analytical Approach 1-12
1.8.1 Approach to Impact Assessment 1-12
1.8.2 Timeframes Evaluated 1-13
1.8.3 Analysis Assumptions 1-15
1.8.4 Other Environmental Analyses 1-18
1.8.5 Significance of Environmental Impacts 1-23

1.8.6 Issues Eliminated from Review in this GEIS 1-24
1.8.7 GEIS Contents....1-24
1.9 Other Applicable Federal Requirements 1-25
1.10 References 1-27
2.0 Generic Facility Descriptions and Activities 2-1
2.1 Generic Facility Descriptions....2-1
2.1.1 At-Reactor Continued Storage Site Descriptions 2-2
2.1.1.1 General Description of Single-Unit Nuclear Power Plant Site....2-2
2.1.1.2 General Description of Multiple-Unit Nuclear Power Plant Sites....2-5
2.1.1.3 Reactor and Fuel Technologies....2-6
2.1.2 Onsite Spent Fuel Storage and Handling 2-11
2.1.2.1 Spent Fuel Pools 2-11
2.1.2.2 At-Reactor Independent Spent Fuel Storage Installations....2-13
2.1.3 Away-from-Reactor ISFSIs....2-18
2.1.4 Dry Transfer System....2-20
2.2 Generic Activity Descriptions....2-24
2.2.1 Short-Term Storage Activities....2-24
2.2.1.1 Decommissioning Activities during Short-Term Storage....2-25
2.2.1.2 Activities in Spent Fuel Pools 2-27
2.2.1.3 Activities at At-Reactor ISFSIs....2-29
2.2.1.4 Activities at Away-from-Reactor ISFSIs....2-30
2.2.2 Long-Term Storage Activities 2-31
2.2.2.1 Construction and Operation of a DTS....2-31
2.2.2.2 Replacement of Storage and Handling Facilities....2-34
2.2.3 Indefinite Storage Activities 2-35
2.3 References....2-36
3.0 Affected Environment....3-1
3.1 Land Use....3-1
3.2 Socioeconomics 3-4
3.2.1 Employment and Income....3-5
3.2.2 Taxes....3-6
3.2.3 Demography 3-6
3.2.4 Housing 3-7
3.2.5 Public Services 3-7

3.2.6 Transportation 3-7
3.3 Environmental Justice 3-8
3.4 Climate and Air Quality....3-11
3.4.1 Climate 3-11
3.4.2 Greenhouse Gases 3-12
3.4.3 Criteria Pollutants 3-13
3.5 Geology and Soils 3-14
3.6 Surface-Water Quality and Use....3-16
3.7 Groundwater Quality and Use 3-17
3.8 Terrestrial Resources 3-19
3.8.1 Upland Vegetation and Habitats....3-20
3.8.2 Lowland and Wetland Vegetation and Habitats....3-21
3.8.3 Wildlife 3-21
3.9 Aquatic Ecology....3-22
3.9.1 Aquatic Habitats 3-23
3.9.1.1 Freshwater Systems 3-23
3.9.1.2 Estuarine Ecosystems 3-24
3.9.1.3 Marine Ecosystems 3-25
3.9.2 Aquatic Organisms 3-25
3.9.2.1 Fish 3-25
3.9.2.2 Aquatic Macroinvertebrates 3-26
3.9.2.3 Zooplankton 3-27
3.9.2.4 Single-Celled Algae 3-27
3.9.2.5 Other Aquatic Invertebrates and Vertebrates 3-27
3.9.2.6 Aquatic Macrophytes 3-27
3.10 Special Status Species and Habitats 3-28
3.11 Historic and Cultural Resources....3-30
3.12 Noise 3-33
3.13 Aesthetics....3-34
3.14 Waste Management 3-34
3.14.1 Low-Level Radioactive Waste 3-34
3.14.2 Mixed Waste....3-36
3.14.3 Hazardous Waste 3-36
3.14.4 Nonradioactive, Nonhazardous Waste 3-37
3.14.5 Pollution Prevention and Waste Minimization 3-37

3.15 Transportation 3-38
3.16 Public and Occupational Health 3-38
3.16.1 Radiological Exposure 3-39
3.16.1.1 Regulatory Requirements for Occupational Exposure 3-39
3.16.1.2 Regulatory Requirements for Public Exposure 3-40
3.16.2 Radiological Exposure from Naturally Occurring and Artificial Sources 3-40
3.16.3 Occupational Hazards 3-42
3.17 References 3-42
4.0 Environmental Impacts of At-Reactor Continued Storage of Spent Fuel 4-1
4.1 Land Use 4-3
4.1.1 Short-Term Storage 4-4
4.1.2 Long-Term Storage 4-5
4.1.3 Indefinite Storage 4-6
4.2 Socioeconomics 4-6
4.2.1 Short-Term Storage 4-6
4.2.2 Long-Term Storage 4-7
4.2.3 Indefinite Storage 4-9
4.3 Environmental Justice 4-9
4.3.1 Short-Term Storage 4-11
4.3.2 Long-Term Storage 4-12
4.3.3 Indefinite Storage 4-14
4.4 Air Quality 4-14
4.4.1 Short-Term Storage 4-14
4.4.2 Long-Term Storage 4-16
4.4.3 Indefinite Storage 4-17
4.5 Climate Change 4-18
4.5.1 Short-Term Storage 4-18
4.5.2 Long-Term Storage 4-19
4.5.3 Indefinite Storage 4-20
4.6 Geology and Soils 4-20
4.6.1 Short-Term Storage 4-20
4.6.2 Long-Term Storage 4-21
4.6.3 Indefinite Storage 4-21

4.7 Surface-Water Quality and Use 4-22
4.7.1 Short-Term Storage 4-22
4.7.1.1 Spent Fuel Pools 4-22
4.7.1.2 ISFSIs 4-23
4.7.1.3 Conclusion 4-23
4.7.2 Long-Term Storage 4-23
4.7.3 Indefinite Storage 4-24
4.8 Groundwater Quality and Use 4-25
4.8.1 Short-Term Storage 4-25
4.8.1.1 Spent Fuel Pools 4-25
4.8.1.2 ISFSIs 4-27
4.8.1.3 Conclusion 4-27
4.8.2 Long-Term Storage 4-27
4.8.3 Indefinite Storage 4-28
4.9 Terrestrial Resources 4-29
4.9.1 Short-Term Storage 4-29
4.9.1.1 Spent Fuel Pools 4-29
4.9.1.2 ISFSIs 4-32
4.9.1.3 Conclusion 4-33
4.9.2 Long-Term Storage 4-33
4.9.3 Indefinite Storage 4-35
4.10 Aquatic Ecology 4-36
4.10.1 Short-Term Storage 4-36
4.10.1.1 Spent Fuel Pools 4-36
4.10.1.2 ISFSIs 4-42
4.10.1.3 Conclusion 4-43
4.10.2 Long-Term Storage 4-43
4.10.3 Indefinite Storage 4-44
4.11 Special Status Species and Habitat 4-44
4.11.1 Short-Term Storage 4-44
4.11.1.1 Spent Fuel Pools 4-44
4.11.1.2 ISFSIs 4-46
4.11.1.3 Conclusion 4-47
4.11.2 Long-Term Storage 4-48
4.11.3 Indefinite Storage 4-49
4.12 Historic and Cultural Resources 4-49

4.12.1 Short-Term Storage 4-50
4.12.2 Long-Term Storage 4-51
4.12.3 Indefinite Storage 4-54
4.13 Noise 4-55
4.13.1 Short-Term Storage 4-55
4.13.2 Long-Term Storage 4-56
4.13.3 Indefinite Storage 4-57
4.14 Aesthetics 4-57
4.14.1 Short-Term Storage 4-57
4.14.2 Long-Term Storage 4-58
4.14.3 Indefinite Storage 4-59
4.15 Waste Management 4-59
4.15.1 Short-Term Storage 4-59
4.15.1.1 Low-Level Radioactive Waste 4-59
4.15.1.2 Mixed Waste 4-60
4.15.1.3 Nonradioactive Waste 4-61
4.15.2 Long-Term Storage 4-61
4.15.2.1 Low-Level Radioactive Waste 4-62
4.15.2.2 Mixed Waste 4-63
4.15.2.3 Nonradioactive Waste 4-64
4.15.3 Indefinite Storage 4-65
4.15.3.1 Low-Level Radioactive Waste 4-65
4.15.3.2 Mixed Waste 4-65
4.15.3.3 Nonradioactive Waste 4-65
4.16 Transportation 4-66
4.16.1 Short-Term Storage 4-66
4.16.2 Long-Term Storage 4-67
4.16.3 Indefinite Storage 4-69
4.17 Public and Occupational Health 4-69
4.17.1 Short-Term Storage 4-69
4.17.2 Long-Term Storage 4-71
4.17.3 Indefinite Storage 4-71
4.18 Environmental Impacts of Postulated Accidents 4-72
4.18.1 Design Basis Events 4-74
4.18.1.1 Design Basis Events in Spent Fuel Pools 4-74

4.18.1.2 Design Basis Events in Dry Cask Storage Systems 4-81
4.18.1.3 Conclusion 4-84
4.18.2 Severe Accidents 4-84
4.18.2.1 Severe Accidents in Spent Fuel Pools 4-85
4.18.2.2 Severe Accidents in Dry Cask Storage Systems and DTSs 4-88
4.18.2.3 Conclusion 4-90
4.19 Potential Acts of Sabotage or Terrorism 4-91
4.19.1 Attacks on Spent Fuel Pools 4-92
4.19.2 Attacks on ISFSIs and DTS 4-94
4.19.3 Conclusion 4-97
4.20 Summary 4-97
4.21 References 4-99
5.0 Environmental Impacts of Away-From-Reactor Storage 5-1
5.1 Land Use 5-5
5.1.1 Short-Term Storage 5-5
5.1.2 Long-Term Storage 5-6
5.1.3 Indefinite Storage 5-8
5.2 Socioeconomics 5-8
5.2.1 Short-Term Storage 5-8
5.2.2 Long-Term Storage 5-9
5.2.3 Indefinite Storage 5-10
5.3 Environmental Justice 5-10
5.3.1 Short-Term Storage 5-11
5.3.2 Long-Term Storage 5-14
5.3.3 Indefinite Storage 5-15
5.4 Air Quality 5-15
5.4.1 Short-Term Storage 5-15
5.4.2 Long-Term Storage 5-18
5.4.3 Indefinite Storage 5-18
5.5 Climate Change 5-19
5.5.1 Short-Term Storage 5-19
5.5.2 Long-Term Storage 5-21
5.5.3 Indefinite Storage 5-21

5.6 Geology and Soils 5-21
5.6.1 Short-Term Storage 5-21
5.6.2 Long-Term Storage 5-22
5.6.3 Indefinite Storage 5-23
5.7 Surface-Water Quality and Use 5-23
5.7.1 Short-Term Storage 5-23
5.7.2 Long-Term Storage 5-24
5.7.3 Indefinite Storage 5-25
5.8 Groundwater Quality and Use 5-25
5.8.1 Short-Term Storage 5-25
5.8.2 Long-Term Storage 5-26
5.8.3 Indefinite Storage 5-26
5.9 Terrestrial Resources 5-27
5.9.1 Short-Term Storage 5-27
5.9.2 Long-Term Storage 5-28
5.9.3 Indefinite Storage 5-29
5.10 Aquatic Ecology 5-29
5.10.1 Short-Term Storage 5-29
5.10.2 Long-Term Storage 5-30
5.10.3 Indefinite Storage 5-31
5.11 Special Status Species and Habitats 5-31
5.11.1 Short-Term Storage 5-31
5.11.2 Long-Term Storage 5-33
5.11.3 Indefinite Storage 5-34
5.12 Historic and Cultural Resources 5-35
5.12.1 Short-Term Storage 5-35
5.12.2 Long-Term Storage 5-37
5.12.3 Indefinite Storage 5-40
5.13 Noise 5-41
5.13.1 Short-Term Storage 5-41
5.13.2 Long-Term Storage 5-42
5.13.3 Indefinite Storage 5-43

5.14 Aesthetics 5-43
5.14.1 Short-Term Storage 5-43
5.14.2 Long-Term Storage 5-44
5.14.3 Indefinite Storage 5-45
5.15 Waste Management 5-45
5.15.1 Short-Term Storage 5-45
5.15.2 Long-Term Storage 5-46
5.15.3 Indefinite Storage 5-48
5.16 Transportation 5-49
5.16.1 Short-Term Storage 5-49
5.16.2 Long-Term Storage 5-52
5.16.3 Indefinite Storage 5-54
5.17 Public and Occupational Health 5-54
5.17.1 Short-Term Storage 5-54
5.17.2 Long-Term Storage 5-55
5.17.3 Indefinite Storage 5-56
5.18 Environmental Impacts of Postulated Accidents 5-56
5.19 Potential Acts of Sabotage or Terrorism 5-58
5.20 Summary 5-58
5.21 References 5-60
6.0 Cumulative Impacts 6-1
6.1 Methodology for Assessing Cumulative Impacts 6-1
6.2 Spatial and Temporal Bounds of the Cumulative Impacts Assessment 6-3
6.3 Past, Present, and Reasonably Foreseeable Actions 6-3
6.3.1 General Trends and Activities 6-4
6.3.2 Other NRC-Regulated or Spent Fuel-Related Activities during Continued Storage 6-8
6.3.2.1 Final Reactor Shutdown Activities Prior to Decommissioning 6-8
6.3.2.2 Decommissioning of the Reactor Power Block (including the spent fuel pool), DTS, and ISFSI 6-9
6.3.2.3 Activities to Prepare the Spent Fuel for Transportation to a Repository for Final Disposal 6-9
6.3.2.4 Transportation of Spent Fuel from an At-Reactor or Away-From-Reactor Storage Facility to a Repository for Disposal 6-10

6.4 Resource-Specific Analyses 6-10
6.4.1 Land Use 6-10
6.4.1.1 Potential Cumulative Impacts from General Trends and Activities 6-10
6.4.1.2 Potential Cumulative Impacts from Other NRC-Regulated or Spent Fuel-Related Activities 6-11
6.4.1.3 Conclusion 6-12
6.4.2 Socioeconomics 6-12
6.4.2.1 Potential Cumulative Impacts from General Trends and Activities 6-13
6.4.2.2 Potential Cumulative Impacts from Other NRC-Regulated or Spent Fuel-Related Activities 6-13
6.4.2.3 Conclusion 6-15
6.4.3 Environmental Justice 6-15
6.4.3.1 Potential Cumulative Impacts from General Trends and Activities 6-16
6.4.3.2 Potential Cumulative Impacts from Other NRC-Regulated or Spent Fuel-Related Activities 6-17
6.4.3.3 Conclusion 6-18
6.4.4 Air Quality 6-18
6.4.4.1 Potential Cumulative Impacts from General Trends and Activities 6-19
6.4.4.2 Potential Cumulative Impacts from Other NRC-Regulated or Spent Fuel-Related Activities 6-19
6.4.4.3 Conclusion 6-20
6.4.5 Climate Change 6-21
6.4.5.1 Potential Cumulative Impacts from General Trends and Activities and from Other NRC-Regulated or Spent Fuel-Related Activities 6-21
6.4.5.2 Conclusion 6-23
6.4.6 Geology and Soils 6-23
6.4.6.1 Potential Cumulative Impacts from General Trends and Activities 6-23
6.4.6.2 Potential Cumulative Impacts from Other NRC-Regulated or Spent Fuel-Related Activities 6-24
6.4.6.3 Conclusion 6-25
6.4.7 Surface-Water Quality and Use 6-25
6.4.7.1 Potential Cumulative Impacts from General Trends and Activities 6-26

6.4.7.2 Potential Cumulative Impacts from Other NRC-Regulated or Spent Fuel-Related Activities....6-26
6.4.7.3 Conclusion....6-27
6.4.8 Groundwater Quality and Use....6-28
6.4.8.1 Potential Cumulative Impacts from General Trends and Activities....6-28
6.4.8.2 Potential Cumulative Impacts from Other NRC-Regulated or Spent Fuel-Related Activities....6-29
6.4.8.3 Conclusion....6-30
6.4.9 Terrestrial Resources....6-30
6.4.9.1 Potential Cumulative Impacts from General Trends and Activities....6-31
6.4.9.2 Potential Cumulative Impacts from Other NRC-Regulated or Spent Fuel-Related Activities....6-32
6.4.9.3 Conclusion....6-33
6.4.10 Aquatic Resources....6-34
6.4.10.1 Potential Cumulative Impacts from General Trends and Activities....6-34
6.4.10.2 Potential Cumulative Impacts from Other NRC-Regulated or Spent Fuel-Related Activities....6-35
6.4.10.3 Conclusion....6-36
6.4.11 Historic and Cultural Resources....6-37
6.4.11.1 Potential Cumulative Impacts from General Trends and Activities....6-38
6.4.11.2 Potential Cumulative Impacts from Other NRC-Regulated or Spent Fuel-Related Activities....6-38
6.4.11.3 Conclusion....6-39
6.4.12 Noise....6-40
6.4.12.1 Potential Cumulative Impacts from General Trends and Activities....6-41
6.4.12.2 Potential Cumulative Impacts from Other NRC-Regulated or Spent Fuel-Related Activities....6-41
6.4.12.3 Conclusion....6-42
6.4.13 Aesthetics....6-43
6.4.13.1 Potential Cumulative Impacts from General Trends and Activities....6-43
6.4.13.2 Potential Cumulative Impacts from Other NRC-Regulated or Spent Fuel-Related Activities....6-44
6.4.13.3 Conclusions....6-45

6.4.14 Waste Management 6-45
6.4.14.1 Potential Cumulative Impacts from General Trends and Activities....6-46
6.4.14.2 Potential Cumulative Impacts from Other NRC-Regulated or Spent Fuel-Related Activities....6-47
6.4.14.3 Conclusion 6-50
6.4.15 Transportation 6-50
6.4.15.1 Potential Cumulative Impacts from General Trends and Activities....6-51
6.4.15.2 Potential Cumulative Impacts from Other NRC-Regulated or Spent Fuel-Related Activities....6-51
6.4.15.3 Conclusion 6-53
6.4.16 Public and Occupational Health 6-53
6.4.16.1 Potential Cumulative Impacts from General Trends and Activities....6-54
6.4.16.2 Potential Cumulative Impacts from Other NRC-Regulated or Spent Fuel-Related Activities....6-55
6.4.16.3 Conclusion 6-55
6.4.17 Environmental Impacts of Postulated Accidents 6-55
6.4.17.1 Potential Cumulative Impacts from General Trends and Activities....6-56
6.4.17.2 Potential Cumulative Impacts from Other NRC-Regulated or Spent Fuel-Related Activities....6-57
6.4.17.3 Conclusion 6-57
6.5 Summary 6-58
6.6 References 6-59
7.0 Cost-Benefit Analysis 7-1
7.1 Assumptions 7-2
7.1.1 New Reactor Applications 7-4
7.1.2 Reactor License Renewal 7-6
7.1.3 ISFSI Licensing 7-7
7.2 Estimated Costs and Benefits of the Proposed Action 7-8
7.3 Estimated Costs and Benefits of the Site-Specific Review Option 7-9
7.4 Estimated Costs and Benefits of the GEIS-Only Option 7-10
7.5 Estimated Costs and Benefits of the Policy-Statement Option 7-12
7.6 Comparison of Alternatives 7-14
7.7 Final Analysis and Final Recommendation 7-17

7.8 References 7-17
8.0 Summary of Environmental Impacts of Continued Storage 8-1
8.1 Summarized Environmental Impacts of Continued Storage 8-2
8.2 Unavoidable Adverse Environmental Impacts of Continued Storage 8-4
8.3 Irreversible and Irretrievable Commitments of Resources Associated with Continued Storage 8-7
8.4 Relationship Between Short-Term Uses of the Environment for Continued Storage and the Maintenance and Enhancement of Long-Term Productivity 8-8
8.5 References 8-9
9.0 List of Preparers 9-1
10.0 Index 10-1
11.0 Glossary 11-1
Appendix A – Scoping Comments A-1
Appendix B – Technical Feasibility of Continued Storage and Repository Availability .. B-1
Appendix C – Outreach and Correspondence C-1
Appendix D – Draft GEIS and Proposed Rule Comment Summaries and Responses D-1
Appendix E – Analysis of Spent Fuel Pool Leaks E-1
Appendix F – Spent Fuel Pool Fires F-1
Appendix G – Spent Fuel Storage Facilities G-1
Appendix H – Estimated Costs of Alternatives H-1
Appendix I – High-Burnup Fuel I-1

Figures

ES-1 Three Storage Timeframes Addressed in this GEIS xxx
1-1 Continued Storage Timeframes 1-14
1-2 NEPA Analyses for NRC Activities 1-19
2-1 Dry Storage of Spent Fuel 2-14
2-2 Licensed/Operating ISFSIs by State 2-16
2-3 Conceptual Sketches of a Dry Transfer System 2-22
2-4 Continued Storage Timeline 2-25
3-1 Map of NRC Regions Showing Locations of Operating Reactors 3-2

Tables

ES-1 Affected Resource Areas for At-Reactor Spent Fuel Storage xxxiv
ES-2 Affected Resource Areas for Away-From-Reactor Spent Fuel Storage xxxv
ES-3 Summary of Environmental Impacts of Continued At-Reactor Storage..... xlvii
ES-4 Summary of Environmental Impacts of Away-From-Reactor Spent Fuel Storage..... lix
ES-5 Summary of Cumulative Effects for Continued Storage of Spent Fuel..... lx
1-1 List of NEPA Documents Used in Preparation of this GEIS 1-20
2-1 U.S. Pressurized Water Reactors with Shared Spent Fuel Pools 2-6
2-2 Stainless-Steel-Clad Fuel at Decommissioning Plants..... 2-7
3-1 Land Area Characteristics of Operating Nuclear Power Plants with Site-Specific ISFSI Licenses..... 3-4
3-2 Occupational Dose Limits for Adults Established by 10 CFR Part 20 3-40
3-3 Average Annual Effective Dose Equivalent of Ionizing Radiation to a Member of the U.S. Population for 2006..... 3-41
4-1 Reference Plant Withdrawal Rates and Heat Loads 4-30
4-2 Summary of Environmental Impacts of Continued At-Reactor Storage..... 4-98
5-1 Summary of Environmental Impacts of Continued Away-from-Reactor Storage..... 5-59
6-1 General Trends and Human Activities Occurring at or near Storage Facilities 6-5
6-2 Comparison of Annual Carbon Dioxide Emission Rates 6-22
6-3 Summary of Incremental Impacts from Continued Storage on Waste Management..... 6-46
6-4 Summary of the Cumulative Impacts from Continued Storage When Added to Other Federal and Non-Federal Activities 6-58
7-1 Estimated Costs of the Proposed Action 7-9
7-2 Constant and Discounted Estimated Costs of the Site-Specific Review Option..... 7-9
7-3 Constant and Discounted Estimated Costs of the GEIS-Only Option 7-11
7-4 Constant and Discounted Estimated Costs of the Policy-Statement Option 7-13
7-5 Summary of Constant and Discounted Estimated Costs for the Proposed Action and NRC's Potential Options in the Case of No Action (in millions of 2014 dollars) 7-15
7-6 Summary of Unquantified Costs and Benefits of the Proposed Action and NRC's Potential Options in Case of No Action..... 7-16
8-1 Summary of Environmental Impacts of Continued At-Reactor Storage..... 8-2
8-2 Summary of Environmental Impacts of Continued Storage at an Away-from-Reactor Independent Spent Fuel Storage Installation..... 8-3
8-3 Summary of the Cumulative Impacts from Continued Storage When Added to Other Federal and Non-Federal Activities 8-4
9-1 List of Preparers—NRC 9-2
9-2 List of Preparers—CNWRA 9-5
9-3 List of Preparers—PNNL 9-6

Executive Summary

This summary describes the contents of the U.S. Nuclear Regulatory Commission's (NRC's) Generic Environmental Impact Statement for Continued Storage of Spent Nuclear Fuel (GEIS). It briefly discusses the proposed action (a rulemaking), alternatives to the proposed action, and the NRC's recommendation to the Commission. It also describes the NRC's determinations regarding the environmental impacts of at-reactor and away-from-reactor continued storage of spent nuclear fuel (spent fuel) over short-term, long-term, and indefinite timeframes, including the NRC's analysis of spent fuel pool leaks and fires.

ES.1 What is Waste Confidence?

Historically, Waste Confidence has been the NRC's generic determination regarding the technical feasibility and environmental impacts of safely storing spent fuel beyond the licensed life for operations of a nuclear power plant. The Commission incorporated the generic determination in its regulations at Title 10 of the *Code of Federal Regulations* (CFR) 51.23, which satisfied the NRC's obligations under the National Environmental Policy Act of 1969, as amended (NEPA), with respect to the continued storage of spent fuel for commercial reactor licenses, license renewals, and spent fuel storage facility licenses and license renewals.

Continued Storage applies to the storage of spent fuel *after* the end of the licensed life for operations of a nuclear reactor and *before* final disposal in a permanent repository.

ES.2 Why Did the NRC Change the Name of the Generic Environmental Impact Statement and Rule?

During the public comment period on the draft GEIS and proposed Rule, the NRC asked four specific questions, one of which was, "Should the title of the rule be changed in light of a GEIS being issued instead of a separate Waste Confidence Decision?" The NRC received an overwhelming number of comments in favor of changing the name of the Rule; therefore, the title of the *Federal Register* Notice for the rulemaking has been changed to "Continued Storage of Spent Nuclear Fuel." Further, the title of the GEIS has been changed to, "Generic Environmental Impact Statement for Continued Storage of Spent Nuclear Fuel" to be consistent with the title of the rulemaking. Appendix D contains summaries of the public input received on the four specific questions on the proposed Rule and other comments received on the draft GEIS and proposed Rule as well as the NRC's responses to those comments.

ES.3 Why Has the NRC Developed a Generic Environmental Impact Statement?

Since the Waste Confidence Rule was originally developed in 1984, the NRC has periodically updated the Rule, with the last update completed in 2010. A number of parties challenged the 2010 Waste Confidence Rule in court, and in June 2012, the Court of Appeals for the District of Columbia Circuit ruled that the 2010 Waste Confidence rulemaking did not satisfy the NRC's NEPA obligations. The Court of Appeals identified deficiencies in the 2010 Waste Confidence rule related to the NRC's environmental analysis of spent fuel pool fires and leaks, and the environmental impacts should a repository not become available.

In response to the Court of Appeals' ruling, the Commission decided that the NRC would not issue any final licenses that relied upon the Waste Confidence Rule until the NRC addressed the deficiencies identified by the Court of Appeals (Commission Order CLI–12–16). The Commission separately directed the staff to develop an updated Waste Confidence decision and Rule supported by an environmental impact statement (SRM-COMSECY-12-0016). The staff has prepared this GEIS to satisfy its NEPA obligations regarding the environmental impacts of continued storage of spent fuel in an efficient manner. The GEIS provides a regulatory basis for the revision of the Rule. Chapter 1 of the GEIS provides a more detailed discussion of the history of the Waste Confidence rulemaking.

To comply with **The National Environmental Policy Act of 1969 (NEPA)** Federal agencies:

- assess the environmental impacts of major Federal actions,
- consider the environmental impacts in making decisions, and
- disclose the environmental impacts to the public.

ES.4 What is the Proposed Action Being Addressed in this GEIS?

The proposed Federal action is the adoption of a revised rule—10 CFR 51.23—that codifies the analysis in the GEIS of the environmental impacts of continued storage of spent fuel.

Why is the NRC evaluating continued storage on a generic basis?

The NRC considers the continued storage of spent fuel an activity that is similar for all commercial nuclear power plants and storage facilities. Therefore, a generic analysis is an appropriate, effective, and efficient method of evaluating the environmental impacts of continued storage. Other examples of NRC generic environmental evaluations include the License Renewal GEIS (NUREG–1437), the Decommissioning GEIS (NUREG–0586), and the In-Situ Leach Uranium Milling Facilities GEIS (NUREG–1910).

ES.5 What is the Purpose and Need for the Proposed Action?

The need for the proposed action is to provide processes for use in NRC licensing to address the environmental impacts of continued storage. Historically, the NRC and license applicants have relied on 10 CFR 51.23 to conclusively address the environmental impacts of continued storage in environmental reports, environmental impact statements (EISs), environmental assessments (EAs), and hearings. The purpose of the proposed action is to preserve the efficiency of the NRC's licensing processes with respect to the environmental impacts of continued storage.

ES.6 Could the NRC Pursue Options Other Than This Rulemaking?

Yes. As discussed in Section 1.6 of the GEIS, the NRC considered several different approaches for evaluating the environmental impacts of continued storage. The NRC looked at the three options that it could have pursued if it chose not to adopt a revised 10 CFR 51.23.

1. *The Site-Specific Review Option.* The NRC would take no action to generically address the environmental impacts of continued storage and, instead, would address the environmental impacts of continued storage in individual, site-specific licensing reviews.
2. *The GEIS-Only Option*. The NRC would rely on the GEIS to analyze the environmental impacts of continued storage, which would then support site-specific licensing reviews. There would be no Rule, so site-specific EISs or EAs would incorporate the GEIS by reference or adopt the conclusions in the GEIS.
3. *The Policy-Statement Option*. The Commission would issue a policy statement that expresses the Commission's intent to either adopt or incorporate the environmental impacts in the GEIS into site-specific NEPA actions or to prepare a site-specific evaluation for each NRC licensing action.

The NRC determined that the environmental impacts of these three options, in the case of no action, are essentially the same because they are merely different administrative approaches to addressing the environmental impacts of continued storage. Further, in both the proposed action and all of the NRC's options in the case of no action, the NRC would analyze the environmental impacts of continued storage. The NRC's conclusion is to adopt a revised 10 CFR 51.23 because of the efficiencies that would be gained in reactor and spent fuel storage facility licensing reviews. Adopting a revised Rule minimizes expenditures on site-specific reviews, limits the potential for lengthy project delays, and has the same environmental impacts as the NRC's options in case of no action.

During the scoping period and draft GEIS and proposed Rule comment period, the NRC received many suggested alternatives to the rulemaking, including calls for halting NRC licensing activities and shutting down operating reactors or imposing new requirements on nuclear power plants, such as storing spent fuel in special hardened onsite storage, reducing spent fuel pool density, and accelerating the transfer of spent fuel from pools to dry casks. The NRC determined that halting NRC licensing and closing nuclear reactors would not meet the purpose and need of the proposed action. The NRC also determined that additional requirements on spent fuel storage would not meet the purpose and need. Further, the GEIS is a NEPA review and does not authorize the initial or continued operation of any nuclear power plant, nor does it authorize storage of spent fuel; therefore, this GEIS would not be the appropriate activity in which to mandate new spent fuel storage requirements.

This rulemaking does not authorize the initial or continued operation of any nuclear power plant, nor does it authorize storage of spent fuel. It does not permit a nuclear power plant or any other facility to operate or store spent fuel. Every nuclear power plant or specifically licensed spent fuel storage facility must undergo an environmental review as part of its site-specific licensing process.

ES.7 What is Covered in the GEIS?

The GEIS analyzes the environmental impacts of continued storage of spent fuel. The NRC has looked at the direct, indirect, and cumulative effects of continued storage for three timeframes—short-term, long-term, and indefinite. These timeframes are defined below and are discussed in more detail in Section 1.8.2 of the GEIS. The analyses contained in this GEIS provide a regulatory basis for the proposed revisions to 10 CFR 51.23. Appendix B addresses the technical feasibility of repository availability and continued safe storage of spent fuel while Appendices E and F address the consequences of spent fuel pool leaks and fires, respectively.

ES.8 What is Not Covered in the GEIS?

The NRC is evaluating the continued storage of commercial spent fuel in this GEIS. Thus, certain topics are not addressed because they are not within the scope of this review. These topics include:

- noncommercial spent fuel (e.g., defense waste),
- commercial high-level waste generated from reprocessing,
- greater-than-class-C waste,
- foreign spent fuel stored in the United States,
- nonpower reactor spent fuel (e.g., test and research reactors, including foreign generated fuel stored in the United States),

- need for nuclear power, and
- reprocessing of commercial spent fuel.

ES.9 Did the NRC Involve the Public or Governmental Organizations?

The NRC announced that it was planning to develop an EIS and requested comments on the proposed scope of the GEIS in a *Federal Register* Notice that was published on October 25, 2012 (77 FR 65137). Publication of this notice began a 70-day public comment period for scoping. The NRC also issued press releases, sent scoping letters to Tribal governments and State liaisons, and sent e-mails to approximately 1,050 stakeholders who had previously expressed interest in matters related to high-level waste. The NRC conducted four public scoping meetings that were all accessible via Internet and telephone, so people from all over the country could participate and give their comments on the scope of the Waste Confidence GEIS. In November 2012, the NRC met with representatives of the U.S. Environmental Protection Agency (EPA) to discuss the Waste Confidence rulemaking. The NRC also held a government-to-government meeting with the Prairie Island Indian Community in June 2013. There are no formal cooperating agencies identified in this environmental review.

> At the end of the 70-day scoping period, the NRC summarized what it heard and responded to public comments in its *Scoping Summary Report*, which can be accessed at http://pbadupws.nrc.gov/docs/ML1306/ML13060A128.pdf.
>
> A separate document at http://pbadupws.nrc.gov/docs/ML1306/ML13060A130.pdf lists the scoping comments the NRC received, organized by category.
>
> At the end of the draft GEIS and proposed Rule comment period, the NRC summarized the public comments and provided responses in Appendix D of this final GEIS.
>
> A separate document at http://pbadupws.nrc.gov/docs/ML1415/ML14154A175.pdf lists the comments the NRC received on the draft GEIS and proposed Rule.

On September 13, 2013, the EPA published a notice of availability in the *Federal Register* (78 FR 56695), starting the 75-day comment period on the draft GEIS. In response to the October 2013 government shutdown, which caused the agency to reschedule several public meetings, the NRC extended the comment period to December 20, 2013 (78 FR 66858). The NRC also issued press releases, sent letters to Tribal governments and State liaison officers, produced a YouTube video, held multiple teleconferences, and sent e-mails to approximately 3,000 stakeholders who had expressed interest in this project. During the comment period the NRC held 13 public meetings throughout the United States. There were approximately 1,400 total participants at those meetings. Overall, the NRC received approximately

33,100 pieces of correspondence (e.g., e-mails, letters, postcards, etc.) from the public and recorded over 1,600 pages of transcripts.

GEIS Section 1.7 and Appendices A, C, and D discuss public and agency involvement in this environmental review and rulemaking. The Scoping Summary report provides information about the NRC's scoping activities and what the NRC heard during the scoping process. Appendix D provides the NRC's responses to comments received on the draft GEIS and proposed Rule as well as Agencywide Documents Access and Management System (ADAMS) accession numbers for public meeting summaries and transcripts.

The ADAMS electronic public reading room is available at http://www.nrc.gov/reading-rm/adams.html. If you encounter issues accessing ADAMS, call the NRC at 1-800-397-4209 or 301-415-4737, or send an e-mail to pdr.resource@nrc.gov.

ES.10 What Type of Comments Did the NRC Receive on the Draft GEIS?

The NRC transcribed approximately 1,600 pages of comments from nearly 500 meeting participants during the 13 public meetings and received approximately 33,100 written submittals during the comment period. The most common topics were general opposition to nuclear power, feasibility of safe storage and disposal, and alternatives. Other high-interest topics included spent fuel pool fires and leaks, institutional controls, high-burnup fuel, accidents, terrorism and security, expedited transfer of spent fuel to dry cask storage and hardened onsite storage of fuel, and general opposition to the Rule and GEIS. Detailed information on all correspondence, including authors and ADAMS accession numbers for submissions, is contained in a separate document titled, *Comments on the Waste Confidence Draft Generic Environmental Impact Statement and Proposed Rule*, which is located in ADAMS under Accession No. ML14154A175. Appendix D provides comment summaries and the NRC's responses to comments.

ES.11 What Were the Changes to the Final GEIS?

As stated earlier, the NRC received thousands of comments on the draft GEIS and proposed Rule. The NRC made changes to the final GEIS and proposed Rule to address some of the concerns raised in those comments. The NRC also added a glossary (Chapter 11). Some of the changes to the final GEIS are listed below.

High-Burnup Fuel. Because of interest from the public, the NRC added a new appendix (Appendix I) that provides background information on the licensing, storage, and transportation of high-burnup fuel.

Institutional Controls. Because of the volume of public comment on institutional controls, the NRC added additional information in Appendix B.

Purpose of GEIS, Proposed Federal Action, Purpose and Need, and Alternatives. In response to public comments regarding the structure of the GEIS and the rulemaking, the NRC has revised several sections of Chapter 1. The purpose of the GEIS (see Section 1.3) has been simplified to more clearly focus on determining the environmental impacts of continued storage and determining whether those impacts can be generically addressed. The proposed Federal action (in Section 1.4) is the adoption of a revised Rule that codifies, or adopts into regulation, the environmental impacts of continued storage. The purpose of the rulemaking (in Section 1.5) is to preserve the efficiency of NRC's licensing processes with respect to the environmental impacts of continued storage, and the need (also in Section 1.5) is to provide processes for use in NRC licensing to address the environmental impacts of continued storage. Because only the proposed action preserves the efficiency of the NRC's licensing processes with respect to the environmental impacts of continued storage, the NRC's alternatives analysis (in Section 1.6) focuses on the processes—or options—that the NRC could use in the case of no action. These options include all of the approaches to considering the impacts of continued storage that the NRC considered as alternatives in the draft GEIS. Finally, the NRC has clarified that the NRC's proposed action and its options in the case of no action are all different administrative approaches to addressing the environmental impacts of continued storage, and as such, their environmental impacts are not significant.

Cost-Benefit Analysis. The NRC updated its cost-benefit analysis so that it contains current—and reduced—costs for NRC staffing, as well as discounting that starts from a 2014 baseline instead of a 2013 baseline. All cost-benefit information is now presented in 2014 dollars. In addition, the cost-benefit analysis identifies costs associated with GEIS-development and rulemaking as past (or sunk) costs, but it retains them in the analysis to provide a complete picture of the costs associated with each activity. In addition, the NRC changed the arrangement of sections in Chapter 7 to reflect the revised approach to alternatives. Section 7.2 now contains the proposed action, while subsequent sections (Sections 7.3, 7.4, and 7.5) each contain NRC's options in the case of no action.

Cost of Continued Storage. Due to the large number of comments received on this topic the NRC added cost information for continued storage activities and facilities in Chapter 2.

Technical Feasibility of Safe Storage. Additional information was provided in Appendix B on the role of a regulatory framework and institutional controls during continued storage.

Substantive changes to the final GEIS are indicated by "change bars" in the margins of pages.

ES.12 How did the NRC Evaluate the Continued Storage of Spent Fuel in this GEIS?

The NRC looked at potential environmental impacts of continued storage in three timeframes: short-term storage, long-term storage, and indefinite storage (see Figure ES-1). The short-term and long-term storage timeframes include an assumption that a permanent geologic repository becomes available by the end of those timeframes. The indefinite storage timeframe assumes that a repository never becomes available. For a detailed discussion of the three timeframes, see Section 1.8.2.

The NRC has analyzed three timeframes that represent various scenarios for the length of continued storage that may be needed before spent fuel is sent to a repository. The first, most likely, timeframe is the short-term timeframe, which analyzes 60 years of continued storage after the end of a reactor's licensed life for operation. The NRC acknowledges, however, that the short-term timeframe, although the most likely, is not certain. Accordingly, the GEIS also analyzed two additional timeframes. The long-term timeframe considers the environmental impacts of continued storage for an additional 100 years after the short-term timeframe for a total of 160 years after the end of a reactor's licensed life for operation. Finally, although the NRC considers it highly unlikely, the GEIS includes an analysis of an indefinite timeframe, which assumes that a repository does not become available.

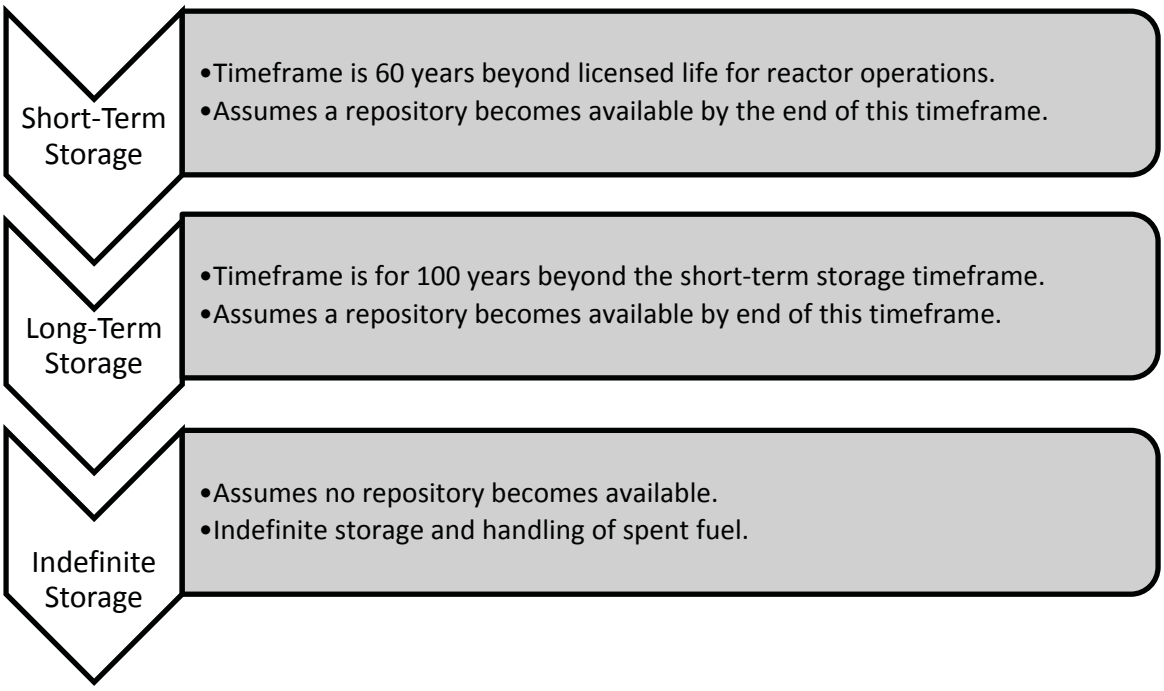

Figure ES-1. Three Storage Timeframes Addressed in this GEIS

To guide its analysis, the NRC also relied on certain assumptions regarding the storage of spent fuel. A detailed discussion of these assumptions is contained in Section 1.8.3. Some of these assumptions are listed below:

- Institutional controls would remain in place.
- Spent fuel canisters and casks would be replaced approximately once every 100 years.
- Independent spent fuel storage installation (ISFSI) and dry transfer system (DTS) facilities would also be replaced approximately once every 100 years.
- A DTS would be built at each ISFSI location for fuel repackaging.
- All spent fuel would be moved from spent fuel pools to dry storage by the end of the short-term storage timeframe (60 years).
- In accordance with NEPA, the analyses in the GEIS are based on current technology and regulations.

An ***ISFSI*** is a facility designed and constructed for the interim storage of spent fuel. Typically, spent fuel is stored in dry cask storage systems. NRC requirements state that dry cask storage must shield people and the environment from radiation and keep the spent fuel inside dry and nonreactive.

DTSs would be built at ISFSI sites (at-reactor or away-from-reactor) in the long-term storage timeframe. A DTS would enable retrieval of spent fuel for inspection or repackaging without the need to return the spent fuel to a spent fuel pool.

The NRC used previous environmental evaluations and technical reports to help inform the impact determinations in this GEIS. Chapter 1 includes a list of NEPA documents used in the development of the GEIS, and the end of each chapter includes a complete list of references. References are publicly available, and most are available in ADAMS.

ES.13 What Facilities and Activities are Addressed in the GEIS?

Chapter 2 describes typical facility characteristics and activities that the NRC used to assess the environmental impacts of continued storage of spent fuel. The GEIS looked at spent fuel storage at single- and multiple-reactor nuclear power plant sites, in spent fuel pools, at-reactor ISFSIs, and away-from-reactor ISFSIs. In addition to existing reactor designs and conventional spent fuel, the NRC also considered reactor and fuel technologies such as mixed oxide fuel (MOX) and small modular reactors.

Section 2.2 describes the activities related to the storage of spent fuel that are expected to occur during the three storage timeframes (short-term, long-term, and indefinite).

- The *short-term storage* timeframe (60 years beyond the licensed life for operation of the reactor) includes routine maintenance and monitoring of the spent fuel pool and ISFSI and transferring spent fuel from pools to dry cask storage. Because decommissioning is required to be completed within 60 years after a reactor shuts down (unless additional time is necessary to protect public health and safety), the NRC assumes that all spent fuel will be moved from spent fuel pools to dry cask storage by the end of the short-term storage timeframe. For an away-from-reactor ISFSI, this timeframe includes construction and operation, including routine maintenance and monitoring, at the facility.
- The *long-term storage* timeframe (100 years beyond the initial 60-year [short-term] storage timeframe) includes activities such as continued facility maintenance, construction and operation of a DTS, and replacement of ISFSI and DTS facilities, including casks.
- The *indefinite storage* timeframe (no repository becomes available) assumes that the activities associated with long-term storage continue indefinitely, with ISFSI and DTS facilities being replaced at least once every 100 years.

MOX fuel is a type of nuclear reactor fuel that contains plutonium oxide mixed with either natural or depleted uranium oxide, in ceramic pellet form. This fuel differs from conventional nuclear fuel, which is made of pure uranium oxide.

Small modular reactors are nuclear power plants smaller in size (e.g., 300 MW(e)) than current generation baseload plants (e.g., 1,000 MW(e) or higher). These compactly designed reactors are factory-fabricated and can be transported by truck or rail to a nuclear power plant site.

The NRC also looked at ongoing regulatory activities that could affect the continued storage of spent fuel, including regulatory changes resulting from lessons learned from the September 11, 2001 terrorist attacks and the March 11, 2011 earthquake and tsunami that damaged the Fukushima Dai-ichi plant in Japan. Appendix B discusses a number of ongoing regulatory program reviews that ensure the safety and security of spent fuel storage and transportation.

ES.14 How did the NRC Describe Environmental Impacts?

NRC used terms from other NEPA documents, such as those for license renewal or new reactors, to define the standard of significance for assessing environmental issues.

SMALL—Environmental effects are not detectable or are so minor that they will neither destabilize nor noticeably alter any important attribute of the resource.

MODERATE—Environmental effects are sufficient to alter noticeably, but not to destabilize, important attributes of the resource.

LARGE—Environmental effects are clearly noticeable and are sufficient to destabilize important attributes of the resource.

For *risk-based determinations* (such as in the NRC's analyses of severe accidents such as spent fuel pool fires), the probability of occurrence as well as the potential consequences have been factored into the determination of significance.

ES.15 What Environmental Resource Areas did the NRC Consider?

Chapter 3 discusses the environment that exists at and around the facilities where spent fuel is stored in spent fuel pools and at-reactor ISFSIs. This description of resources provides information that is incorporated into the analyses of environmental impacts of continued storage in Chapter 4 (at-reactor impacts) and Chapter 6 (cumulative impacts). The License Renewal GEIS (NUREG–1437) was the primary source of information in Chapter 3. The NRC also referenced information from site-specific environmental reviews, such as those for initial and renewal ISFSI licenses, the renewal of operating licenses, and combined licenses for new reactors. The affected resource areas and attributes discussed in the GEIS are listed in Table ES-1.

The affected environment and potential impacts of continued storage at an away-from-reactor ISFSI are discussed in Chapter 5 (away-from-reactor impacts). The analysis of away-from-reactor spent fuel storage in Chapter 5 is based, in general, on the description of the affected environment provided in Chapter 3. However, some aspects of those discussions would not be applicable, or would not be applicable in the same way, for an away-from-reactor ISFSI. This generic analysis is based, in part, on the siting evaluation factors in 10 CFR Part 72, Subpart E, which the location selected for the away-from-reactor ISFSI must meet. Further, for the analysis of continued storage at an away-from-reactor ISFSI, the term ISFSI refers to all of the original facilities that would be built (i.e., storage pads, casks, and canister transfer building).

The affected resource areas and attributes discussed in Chapter 5 of the GEIS are listed in Table ES-2.

Table ES-1. Affected Resource Areas for At-Reactor Spent Fuel Storage

Affected Resource Area	Attributes
Land Use	Site areas and land requirements for operating nuclear power plants; land requirements for at-reactor ISFSIs; general land characteristics and coverage; land use in the vicinity of nuclear power plants; locations of nuclear power plants
Socioeconomics	Regional social, economic, and demographic conditions around nuclear power plant sites, including employment, taxes, public services, housing demand, and traffic
Environmental Justice	Human health and environmental effects; minority and low-income populations; subsistence consumption of fish and wildlife
Climate and Air Quality	Local and regional climate and air quality, including criteria pollutants and greenhouse gases
Geology and Soils	The physical setting of nuclear power plants and associated geologic strata and soils; different physiographic provinces in the United States
Water Resources	Surface-water and groundwater use and quality; existing radioactive leaks at nuclear power plants and tritium contamination of groundwater
Ecological Resources	Terrestrial and aquatic resources, including varied habitat such as wetlands and floodplains, wildlife, aquatic organisms, and threatened, endangered, and protected species and habitat
Historic and Cultural Resources	Historic and cultural resources that could be present at nuclear power plant sites
Noise	Ambient noise levels around existing spent fuel storage sites
Aesthetics	The existing scenic quality of spent fuel storage sites, including viewsheds with water bodies, topographic features, other visual landscape characteristics
Waste Management	Wastes generated by continued storage of spent fuel, including low-level radioactive waste, hazardous waste, mixed waste, nonradioactive/nonhazardous waste; pollution prevention and waste minimization; capacity of disposal facilities
Transportation	Transportation characteristics of reactor sites; workers involved in transportation activities; local, regional, and national transportation networks; populations that use them
Public and Occupational Health	NRC requirements for radiological protection of the public and workers from the continued storage of spent fuel; public radiation doses from natural and artificial sources; regulatory framework for occupational hazards

Table ES-2. Affected Resource Areas for Away-From-Reactor Spent Fuel Storage

Affected Resource Area	Attributes
Land Use	Site areas and land requirements for an away-from-reactor ISFSI to store 40,000 MTU; general land characteristics and coverage
Socioeconomics	Regional social, economic, and demographic conditions, including employment, taxes, public services, housing demand, and traffic
Environmental Justice	Human health and environmental effects; minority and low-income populations; subsistence consumption of fish and wildlife
Climate and Air Quality	Local and regional climate and air quality, including criteria pollutants and greenhouse gases
Geology and Soils	The physical setting and associated geologic strata and soils; the different physiographic provinces in the United States
Water Resources	Surface-water and groundwater use and quality
Ecological Resources	Terrestrial and aquatic resources, including varied habitat such as wetlands and floodplains, wildlife, aquatic organisms, and threatened, endangered, and protected species and habitat
Historic and Cultural Resources	Historic and cultural resources that could be present at an away-from-reactor ISFSI site
Noise	Ambient noise levels around general construction sites
Aesthetics	The existing scenic quality, including viewsheds with water bodies, topographic features, or other visual landscape characteristics
Waste Management	Wastes generated by continued storage of spent fuel, including low-level radioactive waste, hazardous waste, mixed waste, nonradioactive/nonhazardous waste; pollution prevention and waste minimization; capacity of disposal facilities
Transportation	Transportation characteristics; workers involved in transportation activities; local, regional, and national transportation networks and populations that use them
Public and Occupational Health	NRC requirements for radiological protection of the public and workers from the continued storage of spent fuel; public radiation doses from natural and artificial sources; the regulatory framework for occupational hazards

ES.16 What are the Environmental Impacts of Continued Storage?

Chapter 4 addresses potential environmental impacts of at-reactor continued storage in spent fuel pools and at-reactor ISFSIs. Chapter 5 addresses impacts at away-from-reactor ISFSIs. As applicable for each resource area, impact determinations were made for each of the three spent fuel storage timeframes: short-term, long-term, and indefinite. The following pages provide a short synopsis of impacts, followed by summary tables (Tables ES-3 and ES-4). At-reactor impacts of continued storage are addressed first, followed by away-from-reactor

impacts. For some resource areas, the impact determination language is specific to the authorizing regulation, executive order, or guidance.

ES.16.1 Environmental Impacts of At-Reactor Spent Fuel Storage

ES.16.1.1 Land Use

Short-Term Storage. Impacts would be SMALL. Continued at-reactor storage in a spent fuel pool or ISFSI would not require disturbance of any new land or result in operational or maintenance activities that would change land use.

Long-Term Storage. Impacts would be SMALL. Long-term storage at an at-reactor ISFSI would not result in operational or maintenance activities that would change land-use conditions. Construction of a DTS and replacement of an ISFSI and a DTS after 100 years would impact a small fraction of the land committed for a nuclear power plant.

Indefinite Storage. Impacts would be SMALL. Impacts would be similar to long-term impacts—a small fraction of land would be impacted and land-use conditions would not change. Older ISFSIs and DTS facilities would be demolished, and that land would be reclaimed or reused as part of the cyclic replacements.

ES.16.1.2 Socioeconomics

Short-Term Storage. Impacts would be SMALL. A small number of workers would be required to maintain and monitor spent fuel pools and an at-reactor ISFSI, tax payments to local jurisdictions would continue, and there would be no increased demand for housing and public services.

Long-Term Storage. Impacts would be SMALL. The construction of a DTS would take about 1 to 2 years and the size of the construction and ISFSI replacement and operations workforce would be small. Tax payments would continue and would remain relatively constant at post-reactor operations levels. Additionally, there would be no increased demand for housing and public services.

Indefinite Storage. Impacts would be SMALL. Impacts would be similar to those described for long-term storage. The workforce required for monitoring and replacement of DTS facilities and ISFSIs would be small. Property tax revenue would continue as long as spent fuel remains onsite.

ES.16.1.3 Environmental Justice

Short-Term Storage. Continued maintenance and monitoring of spent fuel pools and at-reactor ISFSIs would have minimal human health and environmental effects on all populations including minority and low-income populations. Overall human health and environmental effects from continued short-term spent fuel storage would be limited in scope and SMALL for all populations. Therefore, minority and low-income populations are not expected to experience disproportionately high and adverse human health and environmental effects from the continued short-term storage of spent fuel.

Long-Term Storage. Continued maintenance and monitoring of spent fuel in at-reactor ISFSIs would have minimal human health and environmental effects on all populations including minority and low-income populations near these storage facilities. Overall human health and environmental effects from continued long-term spent fuel storage would be limited in scope and SMALL for all populations, except for historic and cultural resources, which would be SMALL to LARGE. Therefore, minority and low-income populations are not expected to experience disproportionately high and adverse human health and environmental effects from the continued long-term storage of spent fuel.

Indefinite Storage. Indefinite maintenance and monitoring of spent fuel in at-reactor ISFSIs would have minimal human health and environmental effects on all populations including minority and low-income populations near these storage facilities. Overall human health and environmental effects during indefinite storage of spent fuel would be the same as those described for long-term storage, except for the effects of nonradioactive waste generation and disposal, which would be SMALL to MODERATE. Therefore, minority and low-income populations are not expected to experience disproportionately high and adverse human health and environmental effects from the indefinite storage of spent fuel.

ES.16.1.4 Air Quality

Short-Term Storage. Impacts would be SMALL. Air emission impacts from spent fuel storage activities from spent fuel pools and ISFSIs during short-term storage would be substantially smaller than air emissions during power generation. Air temperature changes near dry casks would be indistinguishable from temperature changes that occur naturally.

Long-Term Storage. Impacts would be SMALL. Construction of a DTS, ongoing operation and maintenance of the storage facilities, and replacement of an ISFSI and DTS after 100 years would result in minor and temporary air emissions.

Indefinite Storage. Impacts would be SMALL. Impacts would be similar to those for long-term storage ISFSI and DTS operations, and replacement activities would result in minor and temporary air emissions.

ES.16.1.5 Climate Change

Short-Term Storage. Impacts would be SMALL. The annual level of greenhouse gases generated during continued storage is a small percentage of the annual levels generated in the United States.

Greenhouse gases are gases that trap heat in the atmosphere. The most common greenhouse gases are carbon dioxide, methane, nitrous oxide, and fluorinated gases. Greenhouse gases contribute to global climate change.

Long-Term Storage. Impacts would be SMALL. Impacts would be similar to short-term impacts, and greenhouse gas emissions would be a small fraction of the overall level in the United States.

Indefinite Storage. Impacts would be SMALL. Greenhouse gas emissions would continue to be similar to long-term impacts; they would be a small fraction of the overall level in the United States.

ES.16.1.6 Geology and Soils

Short-Term Storage. Impacts would be SMALL. Continued spent fuel pool operation is not expected to increase impacts to soil and geology. Impacts to soil from small spills and leaks during operation and maintenance of ISFSIs would be minor because of monitoring and environmental protection regulations. No new land would be disturbed for continued operation of spent fuel pools and ISFSIs.

Long-Term Storage. Impacts would be SMALL. Construction, operation, and replacement of the DTS and ISFSI would have minimal impacts to soils on the small fraction of land committed for the facilities, including soil compaction, soil erosion, and potential leaks of oils, greases, and other construction materials. Ongoing operation and maintenance of ISFSIs and DTSs would not be expected to have any additional impacts above those associated with construction. No impacts to geology would be expected.

Indefinite Storage. Impacts would be SMALL. Impacts would be similar to those for long-term storage. Replacement of ISFSIs and DTS facilities would occur on previously disturbed land and would minimize impacts to soils and geology.

ES.16.1.7 Surface-Water Quality and Use

Short-Term Storage. Impacts would be SMALL. Although unlikely, groundwater contamination could affect surface-water quality (see discussion in Appendix E of the GEIS). Potential impacts to surface-water quality and consumptive use from the continued operation of spent fuel pools and ISFSIs would be less than for normal plant operations.

Long-Term Storage. Impacts would be SMALL. Potential consumptive-use and surface-water quality impacts from construction and operation of a DTS would be minor, and replacement of the DTS and ISFSI would be less intense than assumed for initial construction of these facilities.

Indefinite Storage. Impacts would be SMALL. Impacts would be similar to those for long-term storage. Replacement of ISFSIs and DTS facilities once every 100 years would result in temporary and minimal impacts to surface-water quality and use.

ES.16.1.8 Groundwater Quality and Use

Short-Term Storage. Impacts would be SMALL. Groundwater use would be significantly less than that used during reactor operations. Continued storage of spent fuel could result in nonradiological and radiological impacts to groundwater quality. In the unlikely event a spent fuel pool leak remained undetected for a long period of time, contamination of a groundwater source above a regulatory limit could occur (e.g., a Maximum Contaminant Level for one or more radionuclides). Appendix E of the GEIS contains additional supporting analysis of the environmental impacts from spent fuel pool leaks. The analysis concludes that (1) there is a low probability of a leak of sufficient quantity and duration to affect offsite locations and (2) physical processes associated with radionuclide transport, site hydrologic characteristics, and environmental monitoring programs ensure that impacts from spent fuel pool leaks would be unlikely. Impacts to groundwater from continued storage in ISFSIs would be minimal because ISFSI storage requires minimal water and produces minimal, localized, and easy-to-remediate liquid effluents on or near ground surface.

Long-Term Storage. Impacts would be SMALL. Construction of a DTS would require minimal groundwater use. With regard to storage facility-replacement activities, groundwater consumptive use and quality impacts would be similar to those for initial construction of the facilities, and would be minor and temporary.

Indefinite Storage. Impacts would be SMALL. Impacts would be similar to those for long-term storage. Once every 100 years, groundwater would be required for demolishing and replacing the ISFSI and DTS facilities. Consumptive use of groundwater and water-quality impacts would be minor and temporary.

ES.16.1.9 Terrestrial Resources

Short-Term Storage. Impacts would be SMALL. Impacts associated with the operation of spent fuel pools would likely be bounded by the impacts analyzed in the License Renewal GEIS for those issues that were addressed generically in the License Renewal GEIS. For the issue of water-use conflicts with terrestrial resources at plants with cooling ponds or cooling towers using makeup water from a river, the NRC determined that the impacts from operating the spent fuel pool during the short-term storage timeframe would be minimal, because the water withdrawal

requirements for spent fuel pool cooling are considerably lower than those for a power reactor. Impacts associated with operating an at-reactor ISFSI would be minimal and similar to those described in EAs reviewed for preparation of the GEIS (see Table 1-1).

Long-Term Storage. Impacts would be SMALL. Construction, repackaging, and replacement activities for the ISFSI and DTS would have minimal impacts on terrestrial resources. Normal operations and replacement of DTS and ISFSI facilities would not generate significant noise, would not significantly affect the area available for terrestrial wildlife, and would not adversely impact terrestrial environments or their associated plant and animal species.

Indefinite Storage. Impacts would be SMALL. Impacts would be similar to long-term storage impacts. Replacement of the ISFSI and DTS facilities would occur on land near the existing facilities and could be sited on previously disturbed ground and away from terrestrial species and habitat.

ES.16.1.10 Aquatic Ecology

Short-Term Storage. Impacts would be SMALL. Impacts associated with the operation of spent fuel pools would likely be minimal and bounded by the impacts analyzed in the License Renewal GEIS because of the lower withdrawal rates, lower discharge rates, and smaller thermal plume for a spent fuel pool compared to an operating reactor with closed-cycle cooling. Impacts from operation of onsite ISFSIs would be minimal because ISFSIs do not require water for cooling, and ground-disturbing activities would have minimal impacts on aquatic ecology.

Long-Term Storage. Impacts would be SMALL. Construction, repackaging, and replacement activities for the ISFSI and DTS would have minimal impacts on aquatic resources. The ISFSI and DTS would not require water for cooling, would produce minimal gaseous or liquid effluents, and would have minimal impacts on aquatic resources.

Indefinite Storage. Impacts would be SMALL. Activities and impacts to aquatic resources would be similar to those described for long-term storage, although complete repackaging would occur once every 100 years. Replacement of ISFSI and DTS facilities would occur on land near existing facilities and could be sited on previously disturbed ground and away from sensitive aquatic features.

ES.16.1.11 Special Status Species and Habitat

Short-Term Storage. If continued operation of an ISFSI or spent fuel pool could affect Federally listed species or designated critical habitat, and if the criteria are met in 50 CFR Part 402 for initiation or reinitiation of Endangered Species Act (ESA), Section 7 consultation, the NRC would be required to initiate or reinitiate ESA Section 7 consultation with the National Marine

Fisheries Services (NMFS) or U.S. Fish and Wildlife Service (FWS). With regard to spent fuel pools, impacts on State-listed species and marine mammals would most likely be less than those experienced during the licensed life for operation of the reactor because of the smaller size of the spent fuel pool's cooling system and lower water demands when compared to those of an operating reactor. With regard to dry cask storage of spent fuel, given the small size and ability to site ISFSI facilities away from sensitive ecological resources, the NRC concludes that continued storage of spent fuel in at-reactor ISFSIs would likely have minimal impacts on State-listed species, marine mammals, migratory birds, and bald and golden eagles.

Endangered Species Act, Section 7, called "Interagency Cooperation," is the mechanism by which Federal agencies ensure that the actions they take, including those they fund or authorize, do not jeopardize the existence of any listed species. Under Section 7, the NRC must consult with the U.S. Fish and Wildlife Service or National Marine Fisheries Service when any action the NRC carries out, funds, or authorizes (such as through a permit) *may affect* a listed endangered or threatened species.

Long-Term Storage. In addition to routine maintenance and monitoring of ISFSIs, impacts from the construction of a DTS and replacement of the DTS and ISFSIs on special status species and habitat would be minimal because of the small size of the ISFSI and DTS facilities and because no water is required for cooling. The NRC assumes that the ISFSI and DTS facilities could be sited to avoid listed species and critical habitat because of the small size of the construction footprint and sufficient amount of previously disturbed areas on most nuclear power plant sites. Therefore, the NRC concludes that construction of a DTS and the replacement of the DTS and ISFSI would likely have minimal impacts on State-listed species, marine mammals, migratory birds, and bald and golden eagles. In the unlikely situation that the continued operation of an ISFSI could affect Federally listed species or designated critical habitat, and if the criteria are met in 50 CFR Part 402 for initiation or reinitiation of ESA Section 7 consultation, then the NRC would be required to initiate or reinitiate ESA Section 7 consultation with the NMFS or FWS.

Indefinite Storage. Impacts from indefinite storage on State-listed species, marine mammals, migratory birds, and bald and golden eagles would be minimal. The same consultation and any associated mitigation requirements described for the long-term storage timeframe would apply to the construction of the DTS and replacement of the DTS and ISFSI facilities during indefinite storage. In the unlikely situation that the continued operation of an ISFSI could affect Federally listed species or designated critical habitat, and if the criteria are met in 50 CFR Part 402 for initiation or reinitiation of ESA Section 7 consultation, the NRC would be required to initiate or reinitiate ESA Section 7 consultation with the NMFS or FWS.

ES.16.1.12 Historic and Cultural Resources

Short-Term Storage. Impacts would be SMALL. Because no ground-disturbing activities are anticipated during the short-term storage timeframe, impacts to historic and cultural resources associated with continued operations and maintenance would be SMALL.

Long-Term Storage. Impacts would be SMALL to LARGE. Impacts from continued operations and routine maintenance are expected to be SMALL during the long-term storage timeframe, similar to those described in the short-term storage timeframe. NRC authorization to construct and operate a DTS and to replace a specifically licensed at-reactor ISFSI and DTS would constitute Federal actions under NEPA and would require site-specific environmental reviews and compliance with the National Historic Preservation Act of 1966 (NHPA) before making a decision on the licensing action. For generally licensed ISFSIs, impacts could be avoided, minimized or mitigated if the licensee has management plans or procedures that require consideration of these resources prior to ground-disturbing activities. The NRC assumes that the replacement of the at-reactor ISFSI and DTS would be constructed on land near the existing facilities. As discussed below, the NRC recognizes that there is uncertainty associated with the degree of prior disturbance and the resources, if any, present in areas where future ground-disturbing activities (i.e., initial and replacement DTS and replacement ISFSI) could occur. The NRC cannot eliminate the possibility that historic and cultural resources would be affected by construction activities during the long-term timeframe because the initial ISFSI could be located within a less-disturbed area with historic and cultural resources in close proximity. Further, resources may be present that would not have been considered significant at the time the initial facilities were constructed, but could become significant in the future. Therefore, the potential impacts to historic and cultural resources would be SMALL to LARGE. This range takes into consideration routine maintenance and monitoring (i.e., no ground-disturbing activities), the absence or avoidance of historic and cultural resources, and potential ground-disturbing activities that could impact historic and cultural resources. In addition, the analysis considers uncertainties inherent in analyzing this resource area over long timeframes. These uncertainties include any future discovery of previously unknown historic and cultural resources; resources that gain significance within the vicinity and the viewshed (e.g., nomination of a historic district) due to improvements in knowledge, technology, and excavation techniques; and changes associated with predicting resources that future generations will consider significant. If construction of a DTS and replacement of the ISFSI and DTS occurs in an area with no historic or cultural resource present or construction occurs in previously a disturbed area that allows avoidance of historic and cultural resources then impacts would be SMALL. By contrast, a MODERATE or LARGE impact could result if historic and cultural resources are present at a site and, because they cannot be avoided, are impacted by ground-disturbing activities during the long-term timeframe.

Indefinite Storage. Impacts would be SMALL to LARGE. Impacts regarding the replacement of the ISFSI and DTS would be similar to those described in the long-term storage timeframe. The NRC assumes that replacement at-reactor ISFSI and DTS would be constructed on land near the existing facilities. As stated in Section 1.8, the NRC assumes that the land where the original facilities were constructed will be available for replacement facility construction; however, the NRC cannot eliminate the possibility that historic and cultural resources would be affected by construction activities during the indefinite timeframe because the initial and replacement ISFSIs and DTS could be located within a less disturbed area with historic and cultural resources in close proximity. Further, resources may be present that would not have been considered significant at the time the initial or replacement facilities were constructed, but could become significant in the future. Impacts to historic and cultural resources would be SMALL to LARGE. This range takes into consideration routine maintenance and monitoring (i.e., no ground-disturbing activities), the absence or avoidance of historic and cultural resources, and potential ground-disturbing activities that could impact historic and cultural resources. The analysis also considers the uncertainties inherent in analyzing this resource area over long timeframes. These uncertainties include any future discovery of previously unknown historic and cultural resources; resources that gain significance within the vicinity and the viewshed (e.g., nomination of a historic district) due to improvements in knowledge, technology, and excavation techniques, and changes associated with predicting resources that future generations will consider significant. If construction of a DTS and replacement of the ISFSI and DTS occurs in an area with no historic or cultural resource present or construction occurs in previously a disturbed area that allows avoidance of historic and cultural resources then impacts would be SMALL. By contrast, a MODERATE or LARGE impact could result if historic and cultural resources are present at a site and, because they cannot be avoided, are impacted by ground-disturbing activities during the indefinite timeframe.

ES.16.1.13 Noise

Short-Term Storage. Impacts would be SMALL. Spent fuel pool and dry cask storage noise levels, noise duration, and distance between noise sources and receptors would generally not be expected to produce noise impacts noticeable to the surrounding community.

Long-Term Storage. Impacts would be SMALL. Construction of the DTS and replacement of the DTS and ISFSI, although temporary and representing a small portion of the overall time period for spent fuel storage, would generate noise levels that exceed EPA-recommended noise levels. Noise from dry cask storage operations would be infrequent and at lower levels than for construction or replacement activities. Generally, for spent fuel storage, the noise levels, noise duration, and distance between the noise sources and receptors would not be expected to produce noise impacts noticeable to the surrounding community.

Indefinite Storage. Impacts would be SMALL. Most noise would be generated by construction equipment associated with the replacement of the ISFSI and DTS facilities; impacts would be similar to those during the long-term storage timeframe.

ES.16.1.14 Aesthetics

Short-Term Storage. Impacts would be SMALL. No changes to the visual profile are likely to occur as a result of the continued operation and maintenance of the existing spent fuel pool and at-reactor ISFSI.

Long-Term Storage. Impacts would be SMALL. Periodic construction, replacement, and operation activities would not significantly alter the landscape of an ISFSI.

Indefinite Storage. Impacts would be SMALL. Impacts would be similar to long-term storage and would not significantly alter the landscape of an ISFSI.

ES.16.1.15 Waste Management

Short-Term Storage. Impacts would be SMALL. Continued at-reactor storage of spent fuel would generate much less low-level, mixed, and nonradioactive waste than an operating facility, and licensees would continue to implement Federal and State regulations and requirements regarding proper management and disposal of wastes.

Long-Term Storage. Impacts would be SMALL. The replacement of the ISFSI, repackaging of spent fuel canisters, and construction, operation, and replacement of the DTS would generate a fraction of the low-level waste (LLW) generated during reactor decommissioning, and LLW would continue to be managed according to Federal and State regulations. The quantity of mixed waste generated from long-term storage would be a small fraction of that generated during the licensed life of the reactor. Although large amounts of nonradioactive waste would be generated by replacement of dry cask storage facilities, it would still be less than the waste generated during reactor decommissioning and would not likely have a noticeable impact on local or regional landfill capacity and operations.

> **Low-level waste** is a general term for a wide range of items that have become contaminated with radioactive material or have become radioactive through exposure to neutron radiation. The radioactivity in these wastes can range from just above natural background levels to much higher levels, such as seen in parts from inside the reactor vessel in a nuclear power reactor.
>
> **Mixed waste** contains two components: low-level radioactive waste and hazardous waste, as defined in EPA regulations.

Indefinite Storage. Impacts would be SMALL to MODERATE. It is expected that sufficient LLW disposal capacity would be made available when needed. A relatively small quantity of mixed waste would be generated from indefinite storage and proper management and disposal

regulations would be followed. The amount of nonradioactive waste that would be generated and impacts to nonradioactive waste landfill capacity are difficult to accurately estimate for the indefinite storage timeframe and therefore could result in SMALL to MODERATE impacts.

ES.16.1.16 Transportation

Short-Term Storage. Impacts would be SMALL. A low volume of traffic and shipping activities is expected with the continued storage of spent fuel in spent fuel pools and at-reactor ISFSIs.

Long-Term Storage. Impacts would be SMALL. There would be small workforce requirements for continued storage and aging management activities (relative to the power plant workforce) and a low frequency of supply shipments and shipments of LLW from DTS activities, continued dry cask storage operations, and ISFSI and DTS replacement activities.

Indefinite Storage. Impacts would be SMALL. There would be no significant changes to the annual magnitude of traffic or waste shipments that were identified for long-term storage.

ES.16.1.17 Public and Occupational Health

Short-Term Storage. Impacts would be SMALL. Annual public and occupational doses would be maintained below the annual dose limits established by 10 CFR Part 72 for the public and 10 CFR Part 20 for occupational personnel. Licensed facilities would also be required by the above regulations to maintain an as-low-as-is-reasonably-achievable (ALARA) program, which would likely reduce the doses even further. Appendix E of the GEIS provides additional information to support the environmental impact determination with respect to leaks from spent fuel pools on public health. Public health regulatory limits could be exceeded in the unlikely event a spent fuel pool leak remained undetected for a long period of time. Preventive maintenance activities would be conducted in accordance with Occupational Safety and Health Agency requirements and risks to occupational health and safety would be infrequent and minor.

ALARA is an acronym for "as low as (is) reasonably achievable," which means making every reasonable effort to maintain exposures to ionizing radiation as far below the dose limits as practical.

Long-Term Storage. Impacts would be SMALL. Public and occupational doses would be maintained well below the dose limits established by 10 CFR Part 72 for the public and 10 CFR Part 20 for occupational personnel. Licensed facilities would also be required by these regulations to maintain an ALARA program to ensure radiation doses are maintained as low as is

10 CFR Part 20 contains the NRC's radiation protection regulations.

10 CFR Part 72 contains the NRC's regulations for licensing storage facilities for spent fuel and other radioactive waste.

reasonably achievable. Construction activities for the DTS would be conducted in accordance with Occupational Safety and Health Agency requirements, and once in operation, ISFSI preventive maintenance would be infrequent and minor.

Indefinite Storage. Impacts would be SMALL. Impacts to public and occupation health are expected to be similar to those from long-term spent fuel storage activities.

ES.16.1.18 Environmental Impacts of Postulated Accidents

Because the accident risks for spent fuel pool storage only apply during the short-term timeframe and the accident risks for dry cask storage are substantially the same across the three timeframes, the GEIS does not present the various accident types by timeframe, but rather by accident type (i.e., design basis and severe) and storage facility type (i.e., spent fuel pool and dry cask storage system).

Design Basis Accidents in Spent Fuel Pools. Impacts would be SMALL. The postulated design basis accidents considered in this GEIS for spent fuel pools include hazards from natural phenomena, such as earthquakes, floods, tornadoes, and hurricanes; hazards from activities in the nearby facilities; and fuel handling-related accidents. In addition, potential effects of climate change are also considered. Based on the assessment in Section 4.18, the environmental impacts of these postulated accidents involving continued storage of spent fuel in pools are SMALL because all important safety structures, systems, and components involved with the spent fuel storage are designed to withstand these design basis accidents without compromising the safety functions.

> A **design basis accident** is a postulated accident that a nuclear facility must be designed and built to withstand without loss to the systems, structures, and components necessary to ensure public health and safety.

Design Basis Accidents in Dry Cask Storage Systems and Dry Transfer Systems. Impacts would be SMALL. All NRC-licensed dry cask storage systems are designed to withstand all postulated design basis accidents without any loss of safety functions. A DTS or a facility with equivalent capabilities may be needed to enable retrieval of spent fuel for inspection or repackaging. Licensees of DTS facilities are required to design the facilities so that all safety-related structures, systems, and components can withstand the design basis accidents without compromising any safety functions. Based on the assessment, the environmental impact of the design basis accidents is SMALL because safety-related structures, systems, and components are designed to function in case of these accidents.

> A **severe accident** is a type of accident that may challenge safety systems at a level much higher than expected.

Severe Accidents in Spent Fuel Pools. Probability-weighted impacts would be SMALL. A spent fuel pool may encounter severe events, such as loss of offsite power or beyond design basis earthquakes. Although it is theoretically possible that these events may lead to loss of spent

fuel pool cooling function resulting in a spent fuel pool fire, the likelihood of such events is extremely small. Additional discussion about spent fuel pool fires can be found in Appendix F.

Severe Accidents in Dry Cask Storage Systems. Probability-weighted impacts would be SMALL. Although some handling accidents such as a postulated drop of a canister could exceed NRC's public dose standards, the likelihood of the event is very low. Therefore, the environmental impact of severe accidents in a dry storage facility is SMALL.

ES.16.1.19 Potential Acts of Sabotage or Terrorism

Although the NRC believes that NEPA does not require such an analysis and that it is only required for facilities within the Ninth Circuit, the NRC finds that even though the environmental consequences of a successful attack on a spent fuel pool beyond the licensed life for operation of a reactor are large, the very low probability of a successful attack ensures that the environmental risk is SMALL. Similarly, for an operational ISFSI or DTS during continued storage, the NRC finds that the environmental risk of a successful radiological sabotage attack is SMALL.

Table ES-3. Summary of Environmental Impacts of Continued At-Reactor Storage

Resource Area	Short-Term Storage	Long-Term Storage	Indefinite Storage
Land Use	SMALL	SMALL	SMALL
Socioeconomics	SMALL	SMALL	SMALL
Environmental Justice	Disproportionately high and adverse impacts are not expected.		
Air Quality	SMALL	SMALL	SMALL
Climate Change	SMALL	SMALL	SMALL
Geology and Soils	SMALL	SMALL	SMALL
Surface Water			
Quality	SMALL	SMALL	SMALL
Consumptive Use	SMALL	SMALL	SMALL
Groundwater			
Quality	SMALL	SMALL	SMALL
Consumptive Use	SMALL	SMALL	SMALL
Terrestrial Resources	SMALL	SMALL	SMALL
Aquatic Ecology	SMALL	SMALL	SMALL
Special Status Species and Habitat	Impacts for Federally listed threatened and endangered species and Essential Fish Habitat would be determined as part of the consultations for the ESA and the Magnuson–Stevens Fishery Conservation and Management Act.		

Table ES-3. Summary of Environmental Impacts of Continued At-Reactor Storage (cont'd)

Resource Area	Short-Term Storage	Long-Term Storage	Indefinite Storage
Historic and Cultural Resources	SMALL	SMALL to LARGE	SMALL to LARGE
Noise	SMALL	SMALL	SMALL
Aesthetics	SMALL	SMALL	SMALL
Waste Management			
Low-Level Waste	SMALL	SMALL	SMALL
Mixed Waste	SMALL	SMALL	SMALL
Nonradioactive Waste	SMALL	SMALL	SMALL to MODERATE
Transportation	SMALL	SMALL	SMALL
Public and Occupational Health	SMALL	SMALL	SMALL
Accidents	SMALL	SMALL	SMALL
Sabotage or Terrorism	SMALL	SMALL	SMALL

ES.16.2 Environmental Impacts of Away-From-Reactor Spent Fuel Storage

No away-from-reactor ISFSIs of the size considered in Chapter 5 (40,000 metric tons uranium) have been constructed in the United States. For the analysis of environmental impacts in Chapter 5, the NRC assumes that construction and operation of an away-from-reactor ISFSI would be similar to that proposed for the Private Fuel Storage Facility on the Reservation of the Skull Valley Band of Goshute Indians in Tooele County, Utah. The NRC previously analyzed the environmental impacts of constructing and operating the Private Fuel Storage Facility in NUREG–1714. For the analysis of continued storage at an away-from-reactor ISFSI, the term ISFSI refers to all of the original facilities that would be built (i.e., storage pads, casks, and canister transfer building).

ES.16.2.1 Land Use

Short-Term Storage. Impacts would be SMALL. Construction of an ISFSI would change the nature of land use within the site boundary and along access corridors. While this change could be qualitatively substantial (e.g., from agricultural to industrial), the land parcel is assumed to be sufficiently remote and small that no quantitatively significant impact would occur.

Long-Term Storage. Impacts would be SMALL. Construction of a DTS would disturb a small portion of the land committed for an away-from-reactor storage facility. To minimize land-use impacts from replacement of the ISFSI and DTS facilities, the replacement facilities would likely be constructed on land near the existing facilities, and the old facilities would likely be demolished and the land reclaimed.

Indefinite Storage. Impacts would be SMALL. Only a small portion of the total land committed for development of an away-from-reactor ISFSI is required to support continued operations, including periodic maintenance or replacement of equipment and repackaging of fuel. Replacement of the away-from-reactor ISFSI and DTS every 100 years would likely occur on land near the existing facilities.

ES.16.2.2 Socioeconomics

Short-Term Storage. Adverse impacts would be SMALL. Based on the small workforce required for construction and operations of an away-from-reactor facility, and any associated indirect impacts to public services and housing, the impacts of construction and operation of a storage facility on those resources would be minor. Beneficial impacts to the economy could be LARGE in some rural economies.

Long-Term Storage. Adverse impacts would be SMALL. Construction of a DTS would require a workforce smaller than the workforce required for construction of an away-from-reactor ISFSI. The labor force required for maintenance and replacement activities of an ISFSI and DTS would not be expected to exceed the labor force required for construction of the storage facility as a whole. Beneficial impacts to the economy could be LARGE in some rural economies.

Indefinite Storage. Adverse impacts would be SMALL. If no repository becomes available, operational and replacement activities would continue, beneficial impacts to the economy could be LARGE in some rural economies.

ES.16.2.3 Environmental Justice

Short-Term Storage. The process of siting an away-from-reactor ISFSI would be expected to ensure that environmental justice concerns are addressed prior to licensing. Overall human health and environmental effects from construction of the ISFSI and from continued storage during the short-term timeframe would be limited in scope and SMALL for all populations, except for air quality, terrestrial resources, aesthetics, historic and cultural resources, and socioeconomic and traffic conditions. Minority and low-income populations are not expected to experience disproportionately high and adverse human health and environmental effects from the construction and operation of an away-from-reactor ISFSI. Should the NRC receive an application for a proposed away-from-reactor ISFSI, a site-specific NEPA analysis would be conducted, and that analysis would include consideration of environmental justice impacts.

Long-Term Storage. The impacts from constructing the DTS within the ISFSI protected area would be within the envelope of impacts from the construction of the away-from-reactor ISFSI. Overall human health and environmental effects of storing spent fuel during the long-term timeframe would be limited in scope and SMALL for all populations, except for aesthetics, historic and cultural resources, socioeconomic, and traffic conditions. Given the passive nature of storage operations, the short amount of time required for DTS construction and replacement

of the ISFSI and DTS and the ongoing monitoring and maintenance, minority and low-income populations are not expected to be experience disproportionately high and adverse human health and environmental impacts.

Indefinite Storage. Overall human health and environmental effects of storing spent fuel during the indefinite timeframe would be the same as those described for long-term storage, except for nonradioactive waste generation and disposal. Based on this information, minority and low-income populations are not expected to experience disproportionately high and adverse human health and environmental effects from the operation and replacement of the ISFSI and DTS.

ES.16.2.4 Air Quality

Short-Term Storage. Impacts would be SMALL to MODERATE. Construction of an away-from-reactor ISFSI would result in minimal emissions, but construction of the rail spur could produce temporary and localized impacts that would be noticeable. ISFSI operations generate minor levels of air emissions but not enough to be classified as a “major stationary source” of emissions as defined in Federal air quality regulations. Locomotives transporting spent fuel to an away-from-reactor ISFSI would emit exhaust pollutants in a distributed manner along the transport route.

Long-Term Storage. Impacts would be SMALL. Operational activities are expected to be of relatively short duration and limited in extent. The DTS is a relatively small facility, and the air quality impacts associated with construction would be less than those associated with the original construction of the ISFSI. Replacement of the DTS and ISFSI and maintenance of the rail spur would involve only a fraction of the air emissions associated with initial construction of an ISFSI. Exhaust from vehicles would not be expected to noticeably affect air quality for the region.

Indefinite Storage. Impacts would be SMALL. Indefinite storage would consist of the same short-duration and limited-extent activities and would result in the same impact magnitudes as described for long-term storage except that they would continue indefinitely into the future.

ES.16.2.5 Climate Change

Short-Term Storage. Impacts would be SMALL. Average annual greenhouse gas emissions associated with building and operating an ISFSI as well as transportation (e.g., commuters, supplies, waste materials, and spent fuel) would be equivalent to the annual emissions from about 1,640 passenger vehicles.

Long-Term Storage. Impacts would be SMALL. Construction of a DTS, replacement of dry casks and pads, and maintenance activities would likely involve only a fraction of the greenhouse gas emissions associated with the original construction of the ISFSI.

Indefinite Storage. Impacts would be SMALL. Greenhouse gas emissions would continue to be similar to long-term impacts.

ES.16.2.6 Geology and Soils

Short-Term Storage. Impacts would be SMALL. The land required to construct an ISFSI would be relatively small, and soil erosion controls would minimize impacts.

Long-Term Storage. Impacts would be SMALL. Construction of a DTS would have minimal impacts to geology and soil because of the small size of the facility. Replacement of the ISFSI pads and supporting facilities would likely occur on land near the existing facilities. The old facilities would likely be demolished, and the land would likely be reclaimed.

Indefinite Storage. Impacts would be similar to long-term storage, SMALL. Replacement of ISFSI and DTS facilities would occur on previously disturbed land and would minimize impacts to soils and geology.

ES.16.2.7 Surface-Water Quality and Use

Short-Term Storage. Impacts would be SMALL. Best management practices would be implemented during construction of an ISFSI to address stormwater flows, soil erosion, and siltation. Stormwater control measures would be required to comply with State-enforced water-quality permits. Construction and operation of an ISFSI would require very little consumptive use of water.

Long-Term Storage. Impacts would be SMALL. Given the relatively smaller size of a DTS as compared to an ISFSI, much less water would be required to build a DTS. Consumptive use and surface-water quality impacts would be no greater than those identified for initial construction of the storage facilities.

Indefinite Storage. Impacts would be SMALL. Impacts would be similar to those for long-term storage. Replacement of ISFSIs and DTS facilities once every 100 years would result in temporary and minimal impacts to surface-water quality and use.

ES.16.2.8 Groundwater Quality and Use

Short-Term Storage. Impacts would be SMALL. Methods necessary to control impacts to groundwater quality during construction and operation of an ISFSI are well understood and State-issued permits typically require the implementation of such controls. Construction and operation of an ISFSI would require very little consumptive use of water.

Long-Term Storage. Impacts would be SMALL. Impacts on groundwater from a DTS would be no larger than those considered for construction of the ISFSI. Likewise, the impacts of replacing portions of the ISFSI over time would be no more than the impacts of the initial construction of the facility, and would likely occur over a longer period of time.

Indefinite Storage. Impacts would be SMALL. Impacts would be similar to those for long-term storage. Once every 100 years, groundwater may be required when demolishing and replacing the ISFSI and DTS facilities. Consumptive use of groundwater and water-quality impacts would be minor.

ES.16.2.9 Terrestrial Resources

Short-Term Storage. Impacts would be SMALL to MODERATE. Land area permanently disturbed for construction of an away-from-reactor dry cask storage facility would be relatively small, and any impacts to wetlands would be addressed under the Clean Water Act. However, construction could have some noticeable impacts to terrestrial resources, such as habitat loss, displacement of wildlife, and incremental habitat fragmentation. ISFSI operations would have minimal impacts on terrestrial resources.

Long-Term Storage. Impacts would be SMALL. Impacts from construction of a DTS would be significantly less than those impacts expected from construction and operation of an ISFSI. Because of its relatively small construction footprint, the DTS could be sited on previously disturbed ground and away from sensitive terrestrial resources. Impacts from operational activities would be minor. Replacement activities would occur once about every 100 years, and would likely occur near existing facilities.

Indefinite Storage. Impacts would be SMALL. Replacement activities are not expected to add additional impacts beyond those impacts expected for initial construction of the away-from-reactor ISFSI and DTS. Operation of away-from reactor ISFSIs would not require any additional land use beyond that set aside for original construction of the facility.

ES.16.2.10 Aquatic Ecology

Short-Term Storage. Impacts would be SMALL. Construction and operation of an away-from-reactor ISFSI would require limited water supplies, and effluents, if any, would be limited to stormwater and treated wastewater. Impacts to aquatic resources would tend to be limited by certain factors, including the land area permanently disturbed would be relatively small; water use for the construction and operation of the site would be limited; and any impacts from discharges to water bodies would need to be addressed under the Clean Water Act, which requires licensees to obtain a National Pollutant Discharge Elimination System permit for any discharges to water bodies.

Long-Term Storage. Impacts would be SMALL. Building a DTS, and transferring, handling, and aging management of spent fuel at an away-from-reactor ISFSI could result in ground-disturbing activities that would have impacts similar to or less than impacts associated with the original construction of the ISFSI. Replacement activities would likely occur near existing facilities, and aquatic disturbances would result in relatively short-term impacts and aquatic environs would recover naturally.

Indefinite Storage. Impacts would be SMALL. Activities associated with demolishing old facilities and building replacement facilities about once every 100 years could result in minimal, short-term impacts to aquatic resources. Impacts associated with ISFSI operation and maintenance would also be small.

ES.16.2.11 Special Status Species and Habitat

Short-Term Storage. Impacts from the initial construction and ongoing operation and maintenance of dry cask storage facilities to State-listed species, marine mammals, migratory birds, and bald and golden eagles would range from minimal to noticeable, which would be similar to those described for terrestrial and aquatic resources, with any noticeable impacts resulting from the construction of the ISFSI. An away-from-reactor ISFSI could be sited to avoid adversely affecting special status species and habitat. The NRC would assess the impacts to Federally listed species and designated critical habitat from an away-from-reactor ISFSI and DTS in a site-specific review before the facility is initially constructed and afterwards if an activity meets the criteria in 50 CFR 402 for initiation or reinitiation of Section 7 consultation.

Long-Term Storage. During the long-term storage timeframe, initial construction of the DTS and replacement of the casks, pads, and the DTS would result in impacts that would be less than initial construction impacts because replacement activities would occur within the facility's operational area near existing facilities. The NRC would assess the impacts to Federally listed species and designated critical habitat from an away-from-reactor ISFSI and DTS in a site-specific review before the facility is initially constructed and afterwards if an activity meets the criteria in 50 CFR Part 402 for initiation or reinitiation of Section 7 consultation.

Indefinite Storage. Impacts to special status species and habitat from continued operation of away-from-reactor ISFSIs if a repository never becomes available would be similar to those described for the long-term storage timeframe. The same operations and maintenance activities would occur repeatedly because the spent fuel remains at the facility indefinitely. The NRC would assess the impacts to Federally listed species and designated critical habitat from an away-from-reactor ISFSI and DTS in a site-specific review before the facility is initially constructed and afterwards if an activity meets the criteria in 50 CFR Part 402 for initiation or reinitiation of Section 7 consultation.

ES.16.2.12 Historic and Cultural Resources

Short-Term Storage. Impacts would be SMALL to LARGE. Impacts to historic and cultural resources would vary depending on what resources are present, but could be minimized because (1) the land area disturbed would be relatively small, (2) site selection and placement of facilities on the site could be adjusted to minimize or

Section 106 of the National Historic Preservation Act of 1966 requires Federal agencies to take into account the effects of their undertakings on historic properties.

avoid impacts to historic and cultural resources because the facility does not depend on significant water supply and has limited electrical power needs, and (3) potential impacts could also be minimized through development of agreements, license conditions, and implementation of the licensees' historic and cultural resource management plans and procedures to protect known historic and cultural resources and address inadvertent discoveries. Additionally, should the NRC receive an application for a proposed away-from-reactor ISFSI, the NRC would conduct a site-specific assessment of potential impacts to historic and cultural resources under Section 106 of the NHPA. Impacts from continued operations and routine maintenance during the short-term timeframe would be small because no ground-disturbing activities are expected; therefore, impacts would be SMALL. In most, but not all instances, placement of storage facilities on the site can be adjusted to minimize or avoid impacts on any historic and cultural resources in the area. However, the NRC recognizes that this is not always possible. Therefore, the NRC concludes that the potential impacts on historic and cultural resources could range from SMALL to LARGE, depending on site-specific factors.

Long-Term Storage. Impacts would be SMALL to LARGE. Impacts from continued operations, routine maintenance, replacement of the facilities at an away-from-reactor ISFSI, and potential construction, operation, and replacement of a DTS would vary depending on what resources are present, proposed land disturbance, and if the licensee has management plans and procedures that are protective of historic and cultural resources. Additionally, the construction of a DTS and replacement of an ISFSI and the DTS would be Federal actions that would require the NRC to conduct a site-specific assessment of potential impacts to historical and cultural resources under Section 106 of NHPA. The NRC assumes that the replacement of the ISFSI and DTS would be constructed on land near the existing facilities. The NRC recognizes that there is uncertainty associated with the degree of prior disturbance and the resources, if any, are present in areas where future ground-disturbing activities could occur. The NRC cannot eliminate the possibility that historic and cultural resources would be affected by construction activities because the initial ISFSI could be located within a less-disturbed area with historic and cultural resources in close proximity. Further, resources may be present after initial construction of the away-from-reactor ISFSI that would not have been considered significant at the time the initial or replacement facilities were constructed, but could become significant in the future. This range takes into consideration routine maintenance and monitoring (i.e., no ground-disturbing activities), the absence or avoidance of historic and cultural resources, and potential ground-disturbing activities that impact historic and cultural resources. The analysis also considers uncertainties inherent in analyzing this resource over long timeframes. These uncertainties include any future discovery of previously unknown historic and cultural resources; resources that gain significance within the vicinity and the viewshed (e.g., nomination of a historic district) due to improvements in knowledge, technology, and excavation techniques; and changes associated with predicting resources that would be significant to future generations. If construction of a DTS and replacement of the ISFSI and DTS occurs in an area with no historic or cultural resource present or construction occurs in previously a disturbed area that allows

avoidance of historic and cultural resources then impacts would be SMALL. By contrast, a MODERATE or LARGE impact could result if historic and cultural resources are present at a site and, because they cannot be avoided, are impacted by ground-disturbing activities during the long-term timeframe.

Indefinite Storage. Impacts would be SMALL to LARGE. Impacts would be similar to those described for the long-term storage timeframe. The NRC assumes that the replacement of the ISFSI and DTS would be constructed on land near the existing facilities. As stated in Section 1.8, the NRC assumes that the land where the original facilities were constructed will be available for replacement facility construction; however, the NRC cannot eliminate the possibility that historic and cultural resources will be affected by construction activities during the indefinite timeframe because there is uncertainty associated with the degree of prior disturbance and what resources, if any, are present in areas where future ground-disturbing activities (e.g., initial and replacement DTS and replacement ISFSI) could occur. Further, significant resources may be present that were not considered significant at the time the initial or replacement facilities were constructed. Potential impacts to historic and cultural resources during the indefinite storage timeframe would range from SMALL to LARGE. This range takes into consideration routine maintenance and monitoring (i.e., no ground-disturbing activities), the absence or avoidance of historic and cultural resources, and potential ground-disturbing activities that could impact historic and cultural resources. The analysis also considers uncertainties inherent in analyzing this resource area over long timeframes. These uncertainties include any future discovery of previously unknown historic and cultural resources; resources that gain significance within the vicinity and the viewshed (e.g., nomination of a historic district) due to improvements in knowledge, technology, and excavation techniques; and changes associated with predicting resources that future generations would consider significant. If construction of a DTS and replacement of the ISFSI and DTS occurs in an area with no historic or cultural resource present or construction occurs in previously a disturbed area that allows avoidance of historic and cultural resources then impacts would be SMALL. By contrast, a MODERATE or LARGE impact could result if historic and cultural resources are present at a site and, because they cannot be avoided, are impacted by ground-disturbing activities during the indefinite timeframe.

ES.16.2.13 Noise

Short-Term Storage. Impacts would be SMALL. Noise impacts for an away-from-reactor ISFSI could exceed EPA-recommended levels during some portions of construction and operation; however, noise impacts would be short in duration and intermittent.

Long-Term Storage. Impacts would be SMALL. Noise impacts from continued operation and routine maintenance of an away-from-reactor ISFSI would be minimal. Impacts from construction of a DTS and replacement of the DTS and ISFSI would be similar to those for initial construction of an ISFSI. These construction and replacement activities would be intermittent and short in duration, and noticeable noise levels would be limited to the nearest receptors.

Indefinite Storage. Impacts would be SMALL. Impacts would be similar to those associated with the long-term storage timeframe. Ongoing operation, maintenance, and replacement activities would have minimal noise impacts.

ES.16.2.14 Aesthetics

Short-Term Storage. Impacts would be SMALL to MODERATE. Potential impacts to aesthetic resources would include visibility of facility buildings, dry storage pads and canisters, and the rail line and trains from across scenic water bodies, roadways, or from higher elevations. Lighting of the facility would increase visibility. If constructed in an area with no prior industrial development, the ISFSI could impact the local viewshed, and scenic appeal of the site would be noticeably changed when viewed from various locations. Impacts could be minimal if the ISFSI is built in a previously disturbed area.

Long-Term Storage. Impacts would be SMALL to MODERATE. Aesthetic impacts from transferring and handling spent fuel and aging management activities at an away-from-reactor ISFSI are anticipated to be similar to the impacts for initial construction and short-term operation of the ISFSI. Periodic construction, demolition, and operation activities required for aging management would not significantly alter the pre-existing impacts on aesthetic resources.

Indefinite Storage. Impacts would be SMALL to MODERATE. The same operations and maintenance activities that are described for the long-term storage timeframe occur repeatedly because the spent fuel remains at the facility indefinitely.

ES.16.2.15 Waste Management

Short-Term Storage. Impacts would be SMALL. Construction activities would generate excavation and construction debris, vegetation debris, and backfill. Operation of an away-from-reactor ISFSI would involve limited waste generating activities. Small quantities of LLW may be generated during routine operation and maintenance. Little to no mixed waste generation would be expected. Small quantities of nonradioactive waste would be generated. All wastes would be managed and disposed of according to regulatory requirements.

Long-Term Storage. Impacts would be SMALL. Routine maintenance would generate minimal quantities of waste. Construction and operation of a DTS and replacement of ISFSI and DTS facilities at an away-from-reactor ISFSI would generate LLW and nonradioactive waste. Although the exact amount of LLW and nonradioactive waste depends on the level of contamination, the quantity of LLW generated from the replacement of the ISFSI and DTS is expected to be comparable to the LLW generated during reactor decommissioning, which was determined to have a SMALL impact in the License Renewal GEIS. Although a large amount of nonradioactive waste would be generated by replacement of the ISFSI and DTS, it would not likely have a noticeable impact on total nonradioactive waste disposal capacity.

Indefinite Storage. Impacts would be SMALL to MODERATE. LLW, mixed waste, and nonradioactive waste would continue to be generated indefinitely, and there could be noticeable impacts on the local and regional landfill capacity for nonradioactive waste disposal.

ES.16.2.16 Transportation

Short-Term Storage. Impacts would be SMALL to MODERATE. The environmental impacts of transportation include impacts to regional traffic from commuting workers, supply shipments, shipments of spent fuel to the ISFSI, and shipments of nonradioactive and radiological waste. Impacts to traffic from workers commuting to and from the away-from-reactor storage site depend on the size of the workforce, the capacity of the local road network, traffic patterns, and the availability of alternative commuting routes to and from the facility. The majority of impacts would be associated with the traffic during the initial construction of the ISFSI. Shipment of spent fuel from nuclear power plants to the ISFSI would be required to comply with NRC and the U.S. Department of Transportation regulations. Radiological impacts to the public and workers from spent fuel shipments from a reactor have previously been evaluated by the NRC (in Table S–4 of 10 CFR 51.52) and were found to be small.

Table S–4 in 10 CFR 51.52 summarizes the environmental impacts of transportation of fuel and waste to and from a nuclear power plant. Data supporting the determinations in Table S–4 is contained in the NRC's *Environmental Survey of Transportation of Radioactive Materials to and from Nuclear Power Plants*, WASH–1238, December 1972, and Supp. 1 NUREG–75/038, April 1975.

Long-Term Storage. Impacts would be SMALL to MODERATE. Construction of a DTS would require a smaller workforce than the initial construction of the ISFSI, so transportation impacts from workers commuting would be less, but may still be noticeable. Shipments of LLW generated by maintenance and replacement activities would be regulated by NRC and Department of Transportation requirements and impacts to traffic and to public and worker radiological and nonradiological safety would be minimal.

Indefinite Storage. Impacts would be SMALL to MODERATE. Annual transportation activities and associated environmental impacts would be similar to that analyzed for the long-term storage timeframe.

ES.16.2.17 Public and Occupational Health

Short-Term Storage. Impacts would be SMALL. Nonradiological health impacts from the construction of an away-from-reactor ISFSI include normal hazards associated with construction, such as pollutants (e.g., dust), and fatal and nonfatal occupational injuries (e.g., falls and overexertion). Impacts would be minor and similar to an industrial facility of similar size. Public and occupation radiological doses would be maintained significantly below the

dose limits established by 10 CFR Part 72 and 10 CFR Part 20. Licensed facilities would also be required by those regulations to maintain an ALARA program, which would likely reduce the doses even further.

Long-Term Storage. Impacts would be SMALL. Nonradiological health impacts associated with replacement activities would be similar those for the original construction of the facility, although replacement activities would take place over a longer period of time. Public and occupational radiological doses would be maintained significantly below the dose limits established by 10 CFR Part 72 and 10 CFR Part 20. In addition, the dry cask storage facility would be required to maintain an ALARA program that would likely further reduce radiological doses. Operation of the DTS would involve increased doses to works and a very small increase in dose levels at the site boundary; however, the licensee would still be required to comply with regulations limiting dose.

Indefinite Storage. Impacts would be SMALL. For the indefinite storage timeframe, the types of activities (construction, operation, and replacement) and associated health impacts would remain the same as those for the long-term storage timeframe.

ES.16.2.18 Environmental Impacts of Postulated Accidents

Impacts would be SMALL. Consideration of accidents at an away-from-reactor ISFSI for all three storage timeframes is similar to those for at-reactor ISFSIs (described in Chapter 4). The postulated accident analysis in the GEIS is applicable for all three timeframes (short-term, long-term, and indefinite). The NRC regulations in 10 CFR Part 72 require that structures, systems, and components important to safety will be designed to withstand the effects of natural phenomena (such as earthquakes, tornadoes, and hurricanes) and human-induced events without loss of capability to perform those safety functions. The NRC siting regulations also require applicants to take into consideration, among other things, physical characteristics of sites that are necessary for the safety analysis or that may have an impact on plant design (such as the design basis earthquake). All these factors are considered in determining the acceptability of the site and design criteria of a proposed dry cask storage facility. The GEIS analysis considered an accident scenario in which wind-borne missiles damage the concrete overpack of a dry cask. This accident would result in only slightly higher occupational doses and only negligible increases in radiological doses at the boundary of the site. The analysis also considered an accident resulting in a dry cask leaking, and determined that radiological doses would still be below the limits in 10 CFR Part 20 and 10 CFR Part 72.

ES.16.2.19 Potential Acts of Sabotage or Terrorism

The consideration of acts of sabotage or terrorism at an away-from-reactor ISFSI for all three storage timeframes are similar to those for at-reactor ISFSIs (described in Chapter 4). The

probability and consequences of a successful attack on an away-from-reactor ISFSI or DTS are low; therefore, the environmental risk is SMALL.

Table ES-4. Summary of Environmental Impacts of Away-From-Reactor Spent Fuel Storage

Resource Area	Short-Term Storage	Long-Term Storage	Indefinite Storage
Land Use	SMALL	SMALL	SMALL
Socioeconomics	SMALL (adverse) to LARGE (beneficial)	SMALL (adverse) to LARGE (beneficial)	SMALL (adverse) to LARGE (beneficial)
Environmental Justice	Disproportionately high and adverse impacts are not expected.		
Air Quality	SMALL to MODERATE	SMALL	SMALL
Climate Change	SMALL	SMALL	SMALL
Geology and Soils	SMALL	SMALL	SMALL
Surface-Water Quality and Use	SMALL	SMALL	SMALL
Groundwater Quality and Use	SMALL	SMALL	SMALL
Terrestrial Resources	SMALL to MODERATE	SMALL	SMALL
Aquatic Ecology	SMALL	SMALL	SMALL
Special Status Species and Habitat	Impacts for Federally listed threatened and endangered species and Essential Fish Habitat would be determined as part of the consultations for the ESA and the Magnuson–Stevens Fishery Conservation and Management Act.		
Historic and Cultural Resources	SMALL to LARGE	SMALL to LARGE	SMALL to LARGE
Noise	SMALL	SMALL	SMALL
Aesthetics	SMALL to MODERATE	SMALL to MODERATE	SMALL to MODERATE
Waste Management			
Low-Level Waste	SMALL	SMALL	SMALL
Mixed Waste	SMALL	SMALL	SMALL
Nonradioactive Waste	SMALL	SMALL	SMALL to MODERATE
Transportation			
Traffic	SMALL to MODERATE	SMALL to MODERATE	SMALL to MODERATE
Health	SMALL	SMALL	SMALL
Public and Occupational Health	SMALL	SMALL	SMALL
Accidents	SMALL	SMALL	SMALL
Sabotage or Terrorism	SMALL	SMALL	SMALL

ES.17 Did the NRC Look at Cumulative Impacts?

Cumulative impacts result when the effects of an action are added to or interact with other effects in a particular place and within a particular time.

In Chapter 6, the NRC examined the incremental impact of continued storage on each resource area in combination with other past, present, and reasonably foreseeable actions. The introductory sections of Chapter 6 discuss the NRC's methodology for assessing cumulative impacts, including the spatial and temporal bounds on which the NRC based its analyses, and provide a table that describes national, regional, and local trends that informed the NRC's consideration of reasonably foreseeable future actions. Trends that the NRC examined include increased energy demand, continued use of radiological materials, increased water demand, population growth and demographic shifts, increased urbanization, transportation, and other activities and environmental stressors. The spatial boundaries for the cumulative impact assessment are unique to each resource area and defined in resource-specific analyses in Section 6.4. Each geographic area of analysis includes the area surrounding a single continued storage site and extends to where the resource would be affected by continued storage and could have overlapping impacts with other past, present, and reasonably foreseeable future actions. The temporal boundary for the cumulative effects analysis includes activities that could occur through decommissioning of at-reactor or away-from-reactor storage facilities.

Table ES-5 provides a summary of the determinations made in Chapter 6. The second and third columns list resource impact determinations made in Chapters 4 and 5. These impacts are combined with the past, present, and reasonably foreseeable actions discussed in Chapter 6. The last column lists the cumulative impacts to resource areas. Discussions about impact differences resulting from cumulative effects can be found in Chapter 6.

Table ES-5. Summary of Cumulative Impacts for Continued Storage of Spent Fuel

Resource Area	Incremental Impact from At-Reactor Storage	Incremental Impact from Away-from-Reactor Storage	Cumulative Impact from Continued Storage and Other Federal and Non-Federal Activities
Land Use	SMALL	SMALL	SMALL to MODERATE
Socioeconomics	SMALL	SMALL (adverse) to LARGE (beneficial)	SMALL to LARGE
Environmental Justice	Disproportionately high and adverse impacts are not expected		
Air Quality	SMALL	SMALL to MODERATE	SMALL to MODERATE
Climate Change	SMALL	SMALL	MODERATE
Geology and Soils	SMALL	SMALL	SMALL to MODERATE
Surface-Water Quality and Use	SMALL	SMALL	SMALL to LARGE

Table ES-5. Summary of Cumulative Impacts for Continued Storage of Spent Fuel (cont'd)

Resource Area	Incremental Impact from At-Reactor Storage	Incremental Impact from Away-from-Reactor Storage	Cumulative Impact from Continued Storage and Other Federal and Non-Federal Activities
Groundwater Quality and Use	SMALL	SMALL	SMALL to LARGE
Terrestrial Resources[(a)]	SMALL	SMALL to MODERATE	SMALL to MODERATE
Aquatic Ecology[(a)]	SMALL	SMALL	SMALL to LARGE
Historic and Cultural Resources	SMALL to LARGE	SMALL to LARGE	SMALL to LARGE
Noise	SMALL	SMALL	SMALL to MODERATE
Aesthetics	SMALL	SMALL to MODERATE	SMALL to MODERATE
Waste Management	SMALL to MODERATE	SMALL to MODERATE	SMALL to LARGE
Transportation	SMALL	SMALL to MODERATE	SMALL to MODERATE
Public and Occupational Health	SMALL	SMALL	SMALL
Accidents	SMALL	SMALL	SMALL

(a) Cumulative impacts to Federally listed threatened and endangered species and Essential Fish Habitat would be determined as part of consultations for the ESA and the Magnuson–Stevens Fishery Conservation and Management Act.

ES.18 What is the Purpose of Chapter 8 of the GEIS?

Chapter 8 provides a summary of the environmental impacts and consequences of continued at-reactor and away-from-reactor storage. In addition, Chapter 8 addresses the following NEPA elements for use in future site-specific environmental reviews: (1) unavoidable adverse environmental impacts of continued storage; (2) irreversible and irretrievable resource commitments of continue storage; and (3) the relationship between short-term uses of the environment and the maintenance and enhancement of long-term productivity.

ES.18.1 What are the Unavoidable Adverse Impacts of Continued Storage?

Unavoidable adverse environmental impacts are those potential impacts of continued storage that cannot be avoided because of constraints inherent in using at-reactor and away-from-reactor spent fuel storage facilities for continued storage. The unavoidable adverse environmental impacts associated with continued storage would include impacts of (1) short-term storage in a spent fuel pool, as well as (2) short-term storage, (3) long-term storage, and (4) indefinite storage in at-reactor and away-from-reactor ISFSIs. These impacts are summarized in Table ES-3 and Table ES-4.

ES.18.2 What are the Irreversible and Irretrievable Resource Commitments of Continued Storage?

An irreversible resource commitment is a commitment of environmental resources—to a particular action—that cannot be restored. An irretrievable commitment of resources refers to a commitment of material resources that, once used, cannot be recycled or restored for other uses by practical means. Impacts on land use, terrestrial ecology, aquatic ecology, aesthetics, historic and cultural resources, and waste management would all result in irreversible commitments of resources. Replacement of ISFSI components and transportation would result in irretrievable commitments.

ES.18.3 What is the Relationship between Short-Term Uses of the Environment and the Maintenance and Enhancement of Long-Term Productivity?

The NRC recognizes the relationship between local short-term uses of the environment and the maintenance and enhancement of long-term productivity that occurs from continued storage, which may be authorized by future licensing actions. The local short-term use of the human environment is summarized in terms of the unavoidable adverse environmental impacts and irreversible and irretrievable commitments of resources. The long-term productivity period is the time period beyond continued storage.

Decisions regarding dismantlement and decommissioning affect this relationship. The maximum long-term impact on productivity would result when an at-reactor or away-from-reactor ISFSI is not immediately dismantled at the end of storage operations, or, as with the indefinite storage timeframe, it remains in operation indefinitely. Consequently, the land occupied by an ISFSI would not be available for any other uses. By contrast, when site decommissioning is complete, and an NRC license is terminated, a site would be available for other uses.

Other potential long-term impacts on productivity include the commitment of land and consumption of disposal capacity necessary to meet waste disposal needs. In addition, because loss of historic and cultural resources would constitute irreversible impacts, any loss of historic and cultural resources during continued storage would persist as long-term impacts. A small contribution to greenhouse gas emissions would add to the atmospheric burden of emissions that could contribute to potential long-term impacts.

ES.19 How did the NRC Address Spent Fuel Pool Fires and Leaks?

The NRC assessed the environmental impacts of spent fuel pool fires and leaks as part of the analysis in the GEIS. Appendix E describes the environmental impacts of spent fuel pool leaks during the short-term storage timeframe, and Appendix F describes the environmental impacts of a spent fuel pool fire during the short-term storage timeframe. In the GEIS, the NRC assumes that all spent fuel being stored in spent fuel pools will be transferred to dry casks by the end of the 60-year (short-term) storage timeframe.

ES.19.1 Spent Fuel Pool Leaks

A variety of factors work together to make it unlikely that a spent fuel pool leak would result in noticeable offsite environmental impacts during continued storage. These include the combination of spent fuel pool design and maintenance, operational and regulatory practices (e.g., leakage monitoring, NRC oversight, and groundwater monitoring), site hydrogeologic characteristics, and radionuclide transport properties.

Tritium is a radioactive isotope of hydrogen. Water containing tritium is normally released from nuclear power plants under controlled, monitored conditions that the NRC mandates to protect public health and safety. The NRC evaluates abnormal releases of tritium-contaminated water. More information about tritium from nuclear power plants can be found at http://www.nrc.gov/reading-rm/doc-collections/fact-sheets/tritium-radiation-fs.html.

For impacts to groundwater resources, though unlikely, it is possible that a leak of sufficient quantity and duration could occur, resulting in noticeable, but not destabilizing impacts to groundwater resources. The factors that could lead to a significant leak are many and varied. These factors include the magnitude and duration of the leak, the radiological constituents of the leak, the hydrologic conditions of the site, and the distance to the offsite groundwater resource. All these factors, in addition to the assessment of past leaks and the promulgation of regulations requiring subsurface surveys to determine the presence and extent of subsurface contamination, leads NRC to conclude that the environmental impacts of a spent fuel pool leak during continued storage would be SMALL.

Public health concerns would be related to groundwater contamination and would be limited to private wells nearest the site. In the event of uncontrolled and undetected discharges associated with long-term spent fuel pool leaks to nearby surface waters, the annual discharge would be comparable to normal discharges associated with operating reactors, and would likely remain below limits in 10 CFR Part 50, Appendix I. If, in the unlikely event that a pool leak remained undetected for a long period of time, public health regulatory limits (i.e., EPA drinking water standards) could potentially be exceeded, and the public health impacts could be noticeable, but not destabilizing. However, it is unlikely that a leak of sufficient quantity and

duration could occur without detection, or that a leak would not be impeded by the inherent hydrologic characteristics typical at spent fuel pool locations. Therefore, based on the low probability that a long-duration leak exceeding effluent limits would go undetected and affect offsite groundwater sources to the extent that a public health limit would be exceeded, the NRC concludes that impacts during the short-term storage timeframe would be SMALL.

ES.19.2 Spent Fuel Pool Fires

The spent fuel pool fire environmental impacts described in Appendix F are based upon a summary of spent fuel pool fire risk studies the NRC has completed since 1975. While most of the earlier studies were concerned with spent fuel pool fire risk during the operating life of a reactor, the *Technical Study of Spent Fuel Pool Accident Risk at Decommissioning Nuclear Power Plants* (NUREG–1738), completed in 2001, examined the risk of spent fuel pool fires during the reactor decommissioning period, which is the same storage timeframe of continued storage of spent fuel on which this GEIS is focused. The GEIS assumes that all fuel will be removed from the spent fuel pool by the end of the 60-year decommissioning period, which corresponds to the end of the short-term timeframe.

> The NRC's determination of SMALL for the environmental impacts of a spent fuel fire is based on a **probability-weighted consequence**. This means that the risk of a spent fuel fire informed the impact determination of SMALL.
>
> The risk of a spent fuel fire is low because even though the consequences would be high, the probability is extremely low.

The conservative estimates used to assess spent fuel pool fire accidents, based on the NRC's previous analyses, result in probability-weighted population doses and economic consequences that are comparable to the values calculated for a severe reactor accident, as estimated in the 1996 and 2013 License Renewal GEIS. Furthermore, mitigation measures implemented by licensees as a result of NRC Orders and regulations have further lowered the risk of this class of accidents. As a result, the NRC finds that the environmental impacts from spent fuel pool fires are SMALL during the short-term timeframe.

ES.20 Does the GEIS Address Costs?

Chapter 7 of the GEIS analyzes and compares the benefits and costs associated with the proposed action (adopting a revised 10 CFR 51.23) and the NRC's options in the case of no action (site-specific review, GEIS-only, and policy statement). The no-action options do not alter the environmental impacts of continued storage that the NRC addresses in Chapters 4, 5, and 6. Instead, the options considered provide different administrative approaches that the NRC could apply to future licensing reviews to satisfy the agency's responsibility to consider the potential environmental impacts of continued storage in deciding whether to issue certain new and renewed licenses. Section 7.1 includes assumptions about financial costs and current and

future licensing reviews that are the bases for the cost analysis, while the NRC addresses unquantified costs and benefits throughout Chapter 7.

Section 7.6 summarizes and compares the estimated costs and benefits of the proposed action and the potential options in the case of no action. The cost for the proposed action (adopting a revised 10 CFR 51.23) is significantly lower than the cost for any of the no-action options. This occurs primarily because the NRC does not undertake site-specific reviews of the continued storage issue in the course of individual licensing proceedings as part of the proposed action. In general, the potential options in the case of no action are more costly than the proposed action.

The NRC provides cost information about continued storage facilities and activities in Chapter 2 in response to a large number of public comments on the draft GEIS that requested this information.

ES.21 What is the NRC's Recommendation?

Section 7.7 of the GEIS provides NRC's recommendation that the proposed action is the preferred alternative. The NRC recommendation is based on (1) the NRC's analysis of the cost-benefit balance of the proposed action and the options in the case of no action as presented in Chapter 7; (2) the NRC's consideration of public-scoping and draft GEIS comments in the development of the final GEIS; (3) the lack of environmental impacts associated with either the proposed action or the NRC's options in the case of no action; and (4) the determination that the environmental impacts of continued storage analyzed in the GEIS are unaffected by the NRC's choice of a particular administrative approach for considering the environmental impacts of continued storage in NRC licensing processes.

> The NRC recommendation is to select the proposed action—adopting a revision to 10 CFR 51.23 that codifies the impact determinations from the GEIS—as the preferred alternative.

ES.22 How is the GEIS Related to the Rule?

This GEIS provides a regulatory basis for the NRC's revised Rule, 10 CFR 51.23. Appendix B of the GEIS contains detailed information about the previous Waste Confidence proceedings, and addresses two relevant topics from Waste Confidence proceedings: (1) the technical feasibility of continued safe storage and (2) repository availability. NRC's conclusions regarding these topics continue to undergird the agency's environmental analysis.

ES.23 Are There Any Areas of Controversy in the GEIS?

There were two areas of controversy raised in the Court of Appeals' remand of the 2010 Waste Confidence Rule. These areas of controversy are described below.

1. The NRC has included detailed analyses of spent fuel pool leaks and spent fuel pool fires. Historically, the NRC has devoted considerable attention to these topics, and there has been intense public interest in these issues, as evidenced by comments received during the litigation on the 2010 Waste Confidence update, during the scoping period, and during the comment period on the draft GEIS and proposed Rule. The NRC therefore prepared separate appendices to provide additional detail regarding the studies and analyses that underlie the analyses of spent fuel pool fires and leaks.
2. The NRC has included indefinite storage as one of the three timeframes analyzed in this GEIS. The NRC has devoted considerable attention to this timeframe in response to the intense public interest in this issue, as evidenced by comments received during the litigation on the 2010 Waste Confidence update, during the scoping period, and during the comment period on the draft GEIS and proposed Rule. Although the NRC believes it is likely that a repository will be available by 60 years after the end of a reactor's licensed life for operation, it recognizes that the availability of a repository is a controversial issue and has included an analysis of indefinite storage in the GEIS.

ES.24 Are There Any Remaining Issues to be Resolved?

For the purposes of successfully completing the GEIS while meeting NEPA requirements, the NRC believes there are numerous sources of the requisite technical data and information available; therefore, there are no remaining issues that require resolution. In the reference section of each chapter, the NRC has listed technical documents and reports on pertinent issues that are used to support the analyses in the GEIS. The NRC relied on accurate and high-quality information to ensure the GEIS contains a thorough and rigorous environmental impact analysis. The NRC will continue to review health and environmental effects of spent fuel storage as part of its ongoing licensing, oversight, and research activities. Any new information, such as the performance of spent fuel during lengthy periods of time, will be used to update and improve the NRC's regulatory requirements as appropriate.

ES.25 How Can I Obtain a Copy of the GEIS and Rule?

The final GEIS can be accessed online at http://www.nrc.gov/reading-rm/doc-collections/nuregs/staff/ or in ADAMS under Accession No. ML14198A440. The draft GEIS can be accessed in ADAMS at ML13224A106. The final Rule will be published in the *Federal Register* and at www.regulations.gov.

Abbreviations/Acronyms

ACHP	Advisory Council on Historic Preservation
ADAMS	Agencywide Documents Access and Management System
AEA	Atomic Energy Act
AEC	U.S. Atomic Energy Commission
ALARA	as low as is reasonably achievable
ANDRA	French National Agency for Radioactive Waste Management
ANS	American Nuclear Society
ANSI	American National Standards Institute
APA	Administrative Procedure Act
APS	American Physical Society
ASLBP	Atomic Safety and Licensing Board Panel
ASME	American Society of Mechanical Engineers
ATRI	American Transportation Research Institute
B	billion
BEIR	biological effects of ionizing radiation
BLS	Bureau of Labor Statistics
BMP	best management practice
BWR	boiling water reactor
CEDE	committed effective dose equivalent
CEQ	Council on Environmental Quality
CFR	*Code of Federal Regulations*
CNWRA	Center for Nuclear Waste Regulatory Analyses
CO_2	carbon dioxide
CoC	certificate of compliance
COL	combined license
CPB	U.S. Customs and Border Protection
CPI	Consumer Price Index
D.C.	District of Columbia
dBA	decibel(s) (acoustic)
DBT	design basis threat
DBTT	ductile-to-brittle transition temperature

DEC	Department of Environmental Conservation
DOE	U.S. Department of Energy
DOT	U.S. Department of Transportation
DTS	dry transfer system
EA	Environmental Assessment
EFH	essential fish habitat
EIS	environmental impact statement
EMF	electromagnetic field
EPA	U.S. Environmental Protection Agency
EPRI	Electric Power Research Institute
ESA	Endangered Species Act of 1973, as amended
ESP	early site permit
FEIS	final environmental impact statement
FONSI	finding of no significant impact
FR	*Federal Register*
FSAR	Final Safety Analysis Report
FTE	full-time equivalent
FWS	U.S. Fish and Wildlife Service
GAO	Government Accountability Office
GCRP	U.S. Global Change Research Program
GEH	General Electric-Hitachi
GEIS	Generic Environmental Impact Statement
GHG	greenhouse gases
GTCC	greater than class C
HLW	high-level waste
HOSS	hardened onsite storage
HSM	horizontal storage modules
IAEA	International Atomic Energy Agency
INL	Idaho National Laboratory
iPWR	integral pressurized water reactor
ISFSI	independent spent fuel storage installation
LLW	low-level waste
LWR	light water reactor

M	million
MACCS	MELCOR Accident Consequence Code System
MCL	maximum contaminant level
MEI	maximally exposed individual
MOX	mixed oxide
MTU	metric tons of uranium
NA	not applicable
NAAQS	National Ambient Air Quality Standards
NAS	National Academy of Sciences
NEI	Nuclear Energy Institute
NEPA	National Environmental Policy Act of 1969, as amended
NHPA	National Historic Preservation Act of 1966, as amended
NMFS	National Marine Fisheries Services
NMSS	Office of Nuclear Material Safety and Safeguards
NPDES	National Pollutant Discharge Elimination System
NRC	U.S. Nuclear Regulatory Commission
NRDC	Natural Resources Defense Council
NRHP	National Register of Historic Places
NWPA	Nuclear Waste Policy Act
OMB	Office of Management and Budget
OSHA	Occupational Safety and Health Administration
PAG	protective action guide
PFS	Private Fuel Storage, LLC
PFSF	Private Fuel Storage Facility
PM	particulate matter
PM_{10}	particulate matter with a diameter of 10 microns or less
$PM_{2.5}$	particulate matter with a diameter of 2.5 microns or less
PRA	probabilistic risk assessment
PWR	pressurized water reactors
QA	quality assurance
RCRA	Resource Conservation and Recovery Act of 1976, as amended
REMP	radiological environmental monitoring program

SAMA	severe accident mitigation alternatives
SKB	Swedish Nuclear Fuel and Waste Management Company
SMR	small modular reactor
SOC	Statement of Considerations
TEDE	total effective dose equivalent
TMI-2	Three Mile Island Unit 2
TN	Transnuclear Inc.
TRU	transuranic (waste)
TVA	Tennessee Valley Authority
USACE	U.S. Army Corps of Engineers
USC	United States Code
USCB	U.S. Census Bureau
WIPP	Waste Isolation Pilot Plant

Units of Measure

Metric Prefixes

tera (T-)	10^{12}
giga (G-)	10^{9}
mega (M-)	10^{6}
kilo (k-)	10^{3}
hecto (h-)	10^{2}
deci (d-)	10^{-1}
centi (c-)	10^{-2}
milli (m-)	10^{-3}
mirco (µ-)	10^{-6}
nano (n-)	10^{-9}
pico (p-)	10^{-12}

Radiological Units

µCi/ml	microcurie(s) per milliliter
Bq	becquerel(s)
Ci	curie(s)
Ci/L	curies per liter
Ci/yr	curie(s) per year
mrem	millirem
mSv	millisievert(s)
pCi	picocurie(s)
pCi/L	picocurie(s) per liter
R	roentgen
rad	special unit of absorbed dose
rem	roentgen equivalent man (a special unit of radiation dose)
S	siemens
Sv	sievert

Length/Distance

cm	centimeter(s)
ft	foot or feet
in.	inch(es)
km	kilometer(s)
m	meter(s)
mi	mile(s)
mm	millimeter(s)
yd	yard(s)

Volume

m^3	cubic meter(s)
yd^3	cubic yard(s)
ft^3	cubic foot(feet)
L	liter(s)
gal	gallon(s)
gpd	gallon(s) per day
gpm	gallon(s) per minute
oz	ounce(s)

Area

ha	hectare(s)
ac	acre(s)
ft^2	square foot(feet)
mi^2	square mile(s)
m^2	square meter(s)

Units of Time

hr	hour(s)
mo	month
s	second(s)
yr	year(s)
min	minute
Ryr	reactor year(s)

Units of Measure

Units of Temperature

°C	degree(s) Celsius
°F	degree(s) Fahrenheit

Units of Concentration

ppm	parts per million
ppt	parts per thousand

Units of Speed

mph	mile(s) per hour

Units of Weight

MT	metric ton(s) (or tonne[s])
MTU	metric ton(s) of uranium
T	ton(s)

Units of Power

Btu	British thermal unit(s)
GWd	gigawatt-day(s)
MW	megawatt(s)
MW(e)	megawatt(s) electrical
Ci/L	curies per liter
L/d	liter(s) per day
L/min	liter(s) per minute
ml or mL	milliliter(s)

Appendix D

Draft GEIS and Proposed Rule Comment Summaries and Responses

Appendix D

Draft GEIS and Proposed Rule Comment Summaries and Responses

This appendix contains comment summaries and responses. Separately, the U.S. Nuclear Regulatory Commission (NRC) published a document containing the text of all identified unique comments, *Comments on the Waste Confidence Draft Generic Environmental Impact Statement and Proposed Rule*, which is located in Agencywide Documents Access and Management System (ADAMS) under Accession No. ML14154A175.

D.1 Public Comment Process for the Waste Confidence Draft Generic Environmental Impact Statement and Proposed Rule

The NRC distributed NUREG–2157, the draft *Waste Confidence Generic Environmental Impact Statement* (GEIS) along with the associated proposed rulemaking amending NRC regulations at Title 10 of the *Code of Federal Regulations* (CFR) Part 51 (78 FR 56776), to Federal and State government agencies and organizations; American Indian Tribes; environmental interest groups and non-governmental organizations; members of the NRC's e-mail distribution list (i.e., WCOutreach@nrc.gov), and other members of the public who requested copies of the draft GEIS and proposed Rule. The public comment period on the draft GEIS and proposed Rule ran from September 13, 2013, through December 20, 2013. As part of the process to solicit public comments on the draft GEIS and proposed Rule, the NRC took the following actions:

- announced the upcoming publication of the draft GEIS and proposed Rule in monthly status update teleconferences held in August and September 2013 (NRC 2013a, NRC 2013b);
- placed a copy of the draft GEIS and proposed Rule *Federal Register* Notice into ADAMS, on the NRC's website, and on the Federal rulemaking website (www.regulations.gov) under Docket NRC-2012-0246;
- sent either an electronic document, compact disc, or hard copies of the draft GEIS and proposed Rule to members of the public, environmental interest groups and non-governmental organizations, representatives of American Indian Tribes, Federal and State government agencies, State governmental associations (e.g., the Western Interstate Energy Board, the National Association of Attorneys General, and the National Governors Association), and State environmental information clearinghouses;
- published a request for comment on the draft GEIS and proposed Rule in the *Federal Register* on September 13, 2013 (78 FR 56776);

- established several methods for submission of comments on the draft GEIS and proposed Rule, including through the Internet via an e-mail address and on www.regulations.gov;
- announced (via press releases, e-mails, status update teleconferences, *Federal Register* notices, and NRC blog, YouTube channel, and Twitter feed) and held public meetings in (1) Rockville, MD; (2) Denver, CO; (3) Chelmsford, MA; (4) Tarrytown, NY; (5) Charlotte, NC; (6) Orlando, FL; (7) Oak Brook, IL; (8) Rockville, MD; (9) Carlsbad, CA; (10) San Luis Obispo, CA; (11) Perrysburg, OH; (12) Minnetonka, MN; and (13) Rockville, MD (public teleconference only);
- published a *Federal Register* Notice of extension to the comment period from 75 to 98 days, which ended the comment period on December 20, 2013 (78 FR 66858);
- issued press releases announcing issuance of the draft GEIS and proposed Rule, the public meetings, instructions on how to comment on the draft GEIS and proposed Rule, and extension of the public comment period; and
- used the NRC's Waste Confidence website to aid public review of the draft GEIS and proposed Rule, including posting preliminary versions of the draft documents that were provided to the Commission for their review in June 2013, followed by posting tracked-changes versions of the draft documents that showed changes made as a result of the Commission's review, and providing hyperlinks to references in the draft GEIS and proposed Rule.

Additional information on the NRC's public outreach efforts can be found in Appendix C.

D.1.1 Public Meetings

During the 98-day public comment period, the NRC conducted 13 public meetings. The public meetings in Rockville, MD, on October 1, 2013, and November 14, 2013, featured a live webcast and moderated teleconference line to accommodate remote participants. The meeting on December 9, 2013, was a teleconference-only meeting to ensure that stakeholders unable to participate in the 12 previous public meetings were afforded a final opportunity to present oral comments. Approximately 1,400 people attended or participated in the 13 public meetings, and approximately 500 of those participants provided oral comments. A certified court reporter recorded oral comments and prepared written transcripts of all 13 meetings, and the NRC prepared meeting summaries with a list of participants for each meeting. Meeting summaries and transcripts can be found in ADAMS under the accession numbers listed in Table D-1.

Notices for public meetings were placed in the *Federal Register* (78 FR 54789; 78 FR 56621; 78 FR 57538), on the NRC's public meeting notification website (http://meetings.nrc.gov/pmns/mtg), and on www.regulations.gov. Further, the NRC e-mailed meeting notices to the WCOutreach@nrc.gov distribution list and issued press releases regarding the meetings (NRC 2013c; NRC 2013d; NRC 2013e); NRC 2013f; NRC 2013g; NRC 2013h).

Table D-1. Draft GEIS and Proposed Rule Public Comment Meeting Summaries and Transcripts

Meeting Date	Meeting Location	Meeting Summary (Accession No.)	Meeting Transcript (Accession No.)
October 1, 2013	Rockville, Maryland	ML13282A611	ML13277A455
October 3, 2013	Denver, Colorado	ML13295A427	ML13282A605
October 28, 2013	Chelmsford, Massachusetts	ML13323B497	ML13310B069
October 30, 2013	Tarrytown, New York	ML13323B515	ML13318A129
November 4, 2013	Charlotte, North Carolina	ML13331A719	ML13323B474
November 6, 2013	Orlando, Florida	ML13331A720	ML13330B643
November 12, 2013	Oak Brook, Illinois	ML13343A161	ML13330C033
November 14, 2013	Rockville, Maryland	ML13346A905	ML13330B840
November 18, 2013	Carlsbad, California	ML13352A432	ML13339A942
November 20, 2013	San Luis Obispo, California	ML13352A447	ML13339A946
December 2, 2013	Perrysburg, Ohio	ML13352A453	ML13340A572
December 4, 2013	Minnetonka, Minnesota	ML13352A486	ML13344B149
December 9, 2013	Teleconference	ML13354C057	ML13345B014

Due to the lapse in appropriations and subsequent shutdown of the Federal government in October 2013, the NRC postponed and rescheduled the Oak Brook, IL, Carlsbad, CA, San Luis Obispo, CA, Perrysburg, OH, and Minnetonka, MN public meetings. The NRC also extended the original close of the public comment period from November 27, 2013 to December 20, 2013 (78 FR 66858) and added a final public comment teleconference on December 9, 2013. In the days preceding the government shutdown, the NRC communicated the status of public meetings to stakeholders through e-mail, press releases, and social media (i.e., the NRC Blog and Twitter account).

D.1.2 Public Comments on the Draft GEIS and Proposed Rule

During the public comment period for the draft GEIS and proposed Rule, the NRC received approximately 33,100 written comment submissions in addition to the comments contained in the 1,600 pages of public meeting transcripts. All comment correspondence is available in ADAMS and on www.regulations.gov under docket ID NRC-2012-0246.

Approximately 32,000 of the written submissions were form letters. The NRC identified 12 form letter templates; the majority of form letters were sponsored by the Sierra Club (ML13269A279) and Nuclear Information and Resource Service (ML13330A726). Identical comments contained in form letters were captured only once; however, if form letters contained additional comments on the proceeding, these were treated as unique comments on the rulemaking. Authors and ADAMS accession numbers for form letter submissions are contained in a separate document titled, *Comments on the Waste Confidence Draft Generic Environmental Impact Statement and Proposed Rule*, which is located in ADAMS under Accession No. ML14154A175.

Some comments addressed topics and issues outside the scope of the GEIS and Rule. Examples of out-of-scope issues include comments on operating reactor issues, Yucca Mountain and spent fuel disposal impacts, requests for additional spent fuel storage requirements, and opposition to and support for nuclear energy. Out-of-scope comments are addressed in Sections D.2.49 through D.2.55.

D.1.3 Disposition of Comments

At the conclusion of the comment period the NRC reviewed the 13 public meeting transcripts and each piece of written correspondence received related to the draft GEIS and proposed Rule. Late-filed comments were considered as practicable. As part of this review, the NRC identified statements that it believed were related to the draft GEIS or rulemaking, and recorded these statements as comments. Each piece of comment correspondence was given a unique correspondence identifier (i.e., a comment identification number), allowing each set of comments from a commenter to be traced back to the transcript, letter, or e-mail in which the comments were submitted.

Table D-3 in Section D.3 provides a list of commenters who provided unique comment submissions (i.e., non-form letter submissions). Unique commenter authors are identified by name, affiliation (if given), ADAMS accession number of their comment correspondence, and the comment correspondence identification (ID) number. Each of the 12 form letters is included in Table D-3, and the authors are noted as “Commenters, Multiple” under the Commenter column.

Each comment was assigned to a specific subject area (see Table D-2 for the list of comment categories), and similar comments were further grouped together and summarized. Finally, responses were prepared for each comment summary. This appendix contains comment summaries and the NRC responses to these summaries. Separately, the NRC published a document containing the text of all identified unique comments, *Comments on the Waste Confidence Draft Generic Environmental Impact Statement and Proposed Rule*, which is located in ADAMS under accession number ML14154A175. This separate document provides individual comments organized by comment category, and comment author tables including, as noted above, a table of form letter authors.

When comments resulted in a change to the text of the GEIS or Rule, the corresponding response refers readers to the appropriate section of the GEIS or Rule where the change was made. Throughout the final GEIS—with the exception of this new Appendix D, the new Appendix I on high-burnup fuel, and the glossary in Chapter 11—substantial revisions to the text from the draft GEIS are indicated by vertical lines (change bars) in the margin beside the text.

The NRC categorized and consolidated comments according to subject area. Table D-2 lists the 55 comment categories (i.e., subject areas) and the page where each category begins.

Table D-2. Comment Categories

D.2.1	Comments Concerning Rule Questions	D-6
D.2.2	Comments Concerning the Rulemaking Process	D-13
D.2.3	Comments Concerning the Rule Language	D-22
D.2.4	Comments Concerning Miscellaneous Issues	D-28
D.2.5	Comments Concerning the NEPA Process	D-37
D.2.6	Comments Concerning Public Participation	D-53
D.2.7	Comments Concerning the Scope of the GEIS	D-58
D.2.8	Comments Concerning Site-Specific Issues	D-68
D.2.9	Comments Concerning the Proposed Action & Purpose and Need	D-71
D.2.10	Comments Concerning Alternatives – General	D-86
D.2.11	Comments Concerning Alternatives – No Action/Site-Specific	D-94
D.2.12	Comments Concerning Alternatives – GEIS Only	D-109
D.2.13	Comments Concerning Alternatives – Policy Statement	D-111
D.2.14	Comments Concerning Alternatives – Considered but Eliminated	D-113
D.2.15	Comments Concerning Alternatives – Costs	D-121
D.2.16	Comments Concerning GEIS Assumptions and Analysis	D-127
D.2.17	Comments Concerning GEIS Assumptions – Dry Transfer System	D-157
D.2.18	Comments Concerning GEIS Assumptions – Timeframes	D-164
D.2.19	Comments Concerning GEIS Assumptions – Institutional Controls	D-170
D.2.20	Comments Concerning Site and Activity Descriptions	D-178
D.2.21	Comments Concerning Land Use	D-182
D.2.22	Comments Concerning Socioeconomics	D-190
D.2.23	Comments Concerning Environmental Justice	D-199
D.2.24	Comments Concerning Air Quality	D-207
D.2.25	Comments Concerning Climate Change	D-211
D.2.26	Comments Concerning Geology and Soils	D-218
D.2.27	Comments Concerning Hydrology	D-223
D.2.28	Comments Concerning Ecology	D-247
D.2.29	Comments Concerning Historic and Cultural Resources	D-257
D.2.30	Comments Concerning Noise	D-268
D.2.31	Comments Concerning Aesthetics	D-268
D.2.32	Comments Concerning Waste Management	D-268
D.2.33	Comments Concerning Transportation	D-277
D.2.34	Comments Concerning Public and Occupational Health	D-300
D.2.35	Comments Concerning Accidents and Natural Events	D-313
D.2.36	Comments Concerning Security and Terrorism	D-350
D.2.37	Comments Concerning the Feasibility of Geologic Disposal	D-370
D.2.38	Comments Concerning the Feasibility of Safe Storage and Regulatory Framework	D-385

D.2.39	Comments Concerning Spent Fuel Pool Fires	D-417
D.2.40	Comments Concerning Spent Fuel Pool Leaks	D-454
D.2.41	Comments Concerning Cumulative Impacts	D-488
D.2.42	Comments Concerning the Cost of Storage	D-499
D.2.43	Comments Concerning Decommissioning	D-504
D.2.44	Comments Concerning Emergency Planning	D-507
D.2.45	Editorial Comments on the *Federal Register* Notice	D-511
D.2.46	Editorial Comments on the GEIS	D-513
D.2.47	Comments Concerning Opposition to Rule or GEIS	D-514
D.2.48	Comments Concerning Support for Rule or GEIS	D-516
D.2.49	Out-of-Scope Comments – General	D-517
D.2.50	Out-of-Scope Comments – HOSS and Expedited Transfer	D-530
D.2.51	Out-of-Scope Comments – Reactor Accidents	D-540
D.2.52	Out-of-Scope Comments – Fukushima	D-543
D.2.53	Out-of-Scope Comments – Yucca Mountain	D-547
D.2.54	Out-of-Scope Comments – Opposition to Nuclear Power	D-552
D.2.55	Out-of-Scope Comments – Support for Nuclear Power	D-555

D.2 Comments and Responses

The following pages summarize the comments received on the draft GEIS and proposed Rule and discuss their disposition. Parenthetical numbers after each comment refer to the Correspondence ID number and the comment number. Comments can be tracked to the commenter and the source document through the Correspondence ID numbers listed in Table D-3 in Section D-3.

D.2.1 Comments Concerning Rule Questions

D.2.1.1 – COMMENT: In the proposed Rule, the NRC specifically invited comment on whether the timeline for repository availability should be included in the Rule text (Issue 1). Commenters were requested to comment on whether specific policy statements regarding the timeline for repository availability should be removed from the proposed Rule text. A total of 13 commenters responded.

Commenters who responded to Issue 1 generally expressed support for removing a statement regarding the repository availability timeline from the Rule. Reasons for this support varied, but commonly included a lack of NRC control over repository timelines and previous failures to predict when a repository would become available. Other commenters stated that repository siting is impossible; that the timeline adds nothing and does not inspire confidence; that including a timeline was imprecise and misleading; that it is unnecessary to provide a repository

timeline in an environmental impact statement (EIS); that inadequate basis exists for any particular timeline; that a timeline is not required under the National Environmental Policy Act (NEPA); that inclusion is an NRC overreach as the timeline is not within the authority of the NRC; and that including a statement about repository availability ties the United States to repository disposal of spent fuel to the exclusion of reprocessing or other options. One commenter stated that instead of including a timeline in the Rule, the Statement of Considerations (SOC) should include a plan for updating the GEIS that would reflect the current status of a repository.

One commenter, while supporting removal of the timeline for a repository, suggested that the NRC include a statement providing a timeframe on how long spent fuel can be safely stored, especially in dry storage systems (casks).

The few commenters who expressed support for retaining a statement regarding the timeline for repository availability either provided no rationale for its retention or indicated that the timeline is an important element of the contract the public has with the nuclear industry. One commenter expressed the belief that the availability of a repository is the most critical issue affecting long-term dry cask storage and that inclusion of a statement regarding repository availability in the Rule indicates the importance the Commission places on this key assumption of the GEIS. One commenter stated that a more general “when necessary” finding is more appropriate for the Rule than a specific timeframe. The commenter noted that while there is no legal requirement to include a timeline or prediction, the timeline should be retained because these findings are useful in framing the agency’s assessment of the safety and environmental impacts of continued storage.

RESPONSE: The NRC agrees in part and disagrees in part with the comments. The NRC agrees with the comments that recommend removing the timeline for a repository from the Rule text. While the earlier Waste Confidence rulemakings included predictions of repository availability, the revised Rule and GEIS represent a change in the format from past Waste Confidence proceedings. An analysis of environmental impacts of spent fuel storage for long-term and potentially indefinite timeframes is now provided in the GEIS as the regulatory basis for the Rule, which was not the case in past Waste Confidence proceedings. Consequently, the relationship between repository availability and the consideration of environmental impacts from continued storage has changed. In previous Waste Confidence Rules, the date of future repository availability was the end point of the temporal scope of the NRC’s analysis of the environmental impacts from continued storage. In this Rule, there is no end point to the temporal scope of the NRC’s analysis of the environmental impacts of continued storage, although the Commission continues to believe that a repository is most likely to become available by the end of the short-term timeframe (60 years beyond the licensed life for operation of a reactor). Further, the NRC agrees with the comments that there is no legal requirement to include a timeline in the Rule. Although future repository availability remains an important

consideration because it provides an eventual disposition path for spent fuel, it is no longer needed to provide a time limit for the environmental impacts analysis. To support the analysis in the GEIS, the NRC has determined that a repository is technically feasible and that it is technically feasible to safely store the spent fuel. Further, the GEIS recognizes the uncertainty inherent in predicting when a repository will become available. It therefore contains an analysis of two additional timeframes: a long-term timeframe that contemplates an additional 100 years of storage and an indefinite timeframe that looks at the environmental impacts that could occur if a repository never becomes available.

The Commission's removal of a timeframe from the Rule language does not mean that the Commission is endorsing indefinite storage of spent fuel. The United States national policy remains disposal of spent fuel in a geologic repository, and, as stated in the GEIS, the Commission believes that the most likely scenario is that a repository will become available by the end of the short-term timeframe.

For the above reasons, the statement regarding a timeframe for the availability of a repository has been removed from the Rule. No changes were made to the GEIS as a result of these comments.

(27-2) (152-1) (163-7-11) (250-14-5) (262-3) (327-28-2) (473-18-2) (532-11) (544-18) (603-15)

D.2.1.2 – COMMENT: In the proposed Rule, the NRC specifically invited comment on the issue of including statements regarding the safety of continued spent fuel storage in the Rule text (Issue 2). Commenters were requested to comment on whether specific policy statements regarding the safety of continued spent fuel storage should be made in the Rule text given the expansive and detailed information in the GEIS. A total of 13 commenters provided responses to the specific question on this subject.

In general, commenters who responded to Issue 2 expressed support for making a policy statement regarding safety of continued storage in the Rule text. However, their reasons varied widely. Some commenters indicated that including a statement about safety enhanced openness and transparency, or supported the language because storage is, in fact, safe. Other commenters indicated that it should be included because safety determinations are more important to NRC decisions and to members of the public than environmental issues in spent fuel matters, because the public should have the benefit of the NRC's determination that spent fuel may be stored for extended periods with reasonable assurance of safety, because a safety statement would facilitate opposition to nuclear power, because it is consistent with the long-standing approach to addressing continued storage, and because it addresses legal precedents. One commenter who expressed support for the policy statement indicated that the statement could appear in the SOC rather than in the Rule text.

Commenters who opposed a policy statement regarding safety of continued storage in the Rule text asserted that a statement is unnecessary to the Rule, that the GEIS is unable to support a statement, or that it is not possible to project the future safety of spent fuel storage. Commenters indicated that statements related to safety of spent fuel storage are entirely unrelated and unnecessary to the intended purpose of the Rule and that there are too many unknowns and open issues related to storage that must be resolved before any statement regarding safety can be made.

RESPONSE: The NRC agrees in part and disagrees in part with the comments. The NRC agrees with the comments that supported removing the statement from the Rule text. The generic conclusion that spent fuel can be stored safely beyond the operating life of a power reactor has been a component of all past Waste Confidence proceedings. However, this continued storage rulemaking proceeding is markedly different from past proceedings. Unlike earlier proceedings, the NRC has prepared a GEIS that analyzes the impacts of continued storage of spent fuel, and the GEIS provides the regulatory basis for the Rule. Further, Appendix B of the GEIS discusses the technical feasibility of continued safe storage.

It is important to note that in this GEIS and Rule, the NRC is not making a safety determination under the Atomic Energy Act (AEA) to allow for the continued storage of spent fuel. AEA safety determinations would be made as part of individual licensing actions. See Section D.2.4.1 of this appendix for a broader discussion of the distinction between the generic safety conclusion in Waste Confidence proceedings and the AEA's requirement that the NRC make safety determinations in licensing proceedings. There is not, however, any legal requirement for the NRC to codify this generic safety conclusion in the Rule text.

The NRC has retained the discussion of the technical feasibility and regulatory framework that supports continued safe storage in Appendix B of the GEIS. The NRC also discusses the safety of continued storage in the *Federal Register* Notice for the final Rule. However, it is not necessary to include any conclusions related to safe storage in the Rule itself. By not including a safety decision in the Rule, the NRC does not imply that spent fuel cannot be stored safely. To the contrary, the analysis documented in this GEIS is predicated on the ability to store spent fuel safely over the short-term, long-term, and indefinite timeframes. This understanding is based upon the technical feasibility analysis in the GEIS and the NRC's decades-long experience with spent fuel storage, which has provided substantial technical knowledge about storage of spent fuel. Further, spent fuel is currently being stored safely at reactor and storage sites across the country, which supports the NRC's conclusion that it is feasible for spent fuel to be stored safely for the timeframes considered in the GEIS. No changes were made to the GEIS as a result of these comments.

(27-3) (250-14-6) (262-7) (262-8) (327-31-2) (327-12-3) (327-28-3) (473-18-3) (532-12) (603-16) (619-2-8) (827-6-9) (841-4) (913-13)

D.2.1.3 – COMMENT: In the proposed Rule, the NRC specifically invited comment on the issue of streamlining the SOC (Issue 3). Commenters were specifically requested to comment on whether the Discussion portion of the SOC should be streamlined by removing content that is repeated from the draft GEIS to improve clarity of the discussion. A total of 13 commenters provided responses to the specific question on this subject.

Commenters who responded to Issue 3 provided both support and opposition for streamlining. Commenters who supported streamlining did so most frequently because it would improve clarity or because it would reduce redundancy. Other reasons included that lengthy *Federal Register* notices are burdensome to search and that streamlining could remove anachronisms.

Commenters who opposed streamlining most commonly did so because the information in the Discussion section supports the Rule or provides a plain-language explanation of matters in the Rule. Other commenters opposed streamlining because it would introduce changes upon which the public has not been able to comment; because, in the commenters' view, the *Federal Register* Notice for the Rule should address findings that the NRC historically included as part of the Waste Confidence Decision; and because the *Federal Register* is more readily available to the public and is easier to search than the GEIS. Commenters indicated that the SOC should contain enough information that it can be used as a stand-alone document.

RESPONSE: The NRC agrees with comments that recommended streamlining the *Federal Register* Notice for the Rule. After considering the comments and looking at ways to be more concise in presenting the information, the NRC has decided to streamline the *Federal Register* Notice for the Rule where it is appropriate to do so without removing text necessary to explain the action that the NRC is taking. As noted in the comments, the *Federal Register* Notice for the Rule must contain enough information to explain the matters in the Rule; however, it does not need to be a stand-alone document. The GEIS provides the regulatory basis for the Rule and not everything in the GEIS needs to be addressed in the *Federal Register* Notice for the Rule. Some redundancy between the Rule and GEIS remains to ensure adequate information is present in the *Federal Register* Notice for the Rule to explain the nature and intent of the Rule. Removing duplicative text from the *Federal Register* Notice for the Rule does not change the information that the public had an opportunity to comment on as this information was in the proposed Rule and the draft GEIS. After streamlining, the *Federal Register* Notice for the Rule still contains sufficient information in plain language to provide the reader with an understanding of the nature and intent of the Rule. Some redundancy remains in the *Federal Register* Notice for the final Rule due to the required content and format of a rule. For additional discussion on the inclusion of issues that previous Waste Confidence Rules addressed in the Findings, see Sections D.2.38.20, and D.2.4.4 and Appendix B of the GEIS. No changes were made to the GEIS as a result of these comments.

(27-4) (250-14-7) (262-9) (326-36-1) (327-18-2) (327-31-3) (327-28-4) (329-6-3) (473-18-4) (532-13) (544-19) (603-17) (827-6-10) (827-6-3) (841-5) (913-14)

D.2.1.4 – COMMENT: In the proposed Rule, the NRC specifically invited comment on changing the Rule title (Issue 4). Commenters were specifically requested to comment on whether the title of the Rule should be changed in light of a GEIS being issued instead of a separate Waste Confidence Decision. A total of 13 commenters provided responses to the specific question on this subject.

Commenters who responded to Issue 4 expressed near-unanimous support for changing the title of the Rule. Reasons for support, however, varied widely. Commenters indicated an array of reasons to support changing the Rule name, including that the name is an anachronism, that the title is misleading and provides no useful description of the revised Rule's purpose or intent, that the title shows a lack of transparency, that historical findings of confidence have proven erroneous, that confidence does not exist, that the U.S. Court of Appeals for the District of Columbia Circuit (Court of Appeals) invalidated confidence as a basis for the Rule, that the title should be changed to reflect the evolving rulemaking process (no separate Waste Confidence Decision and reliance on the GEIS), and that confidence requires transfer of all fuel to dry casks and a defined and available endpoint. Many other commenters—who did not expressly respond to this issue—expressed views that "waste confidence" is a confusing term or that it conveys a confidence that does not exist.

Only one commenter who responded to this issue expressed opposition to revising the title. The commenter was opposed because waste confidence is what the rulemaking has been about historically and the Rule should still be about confidence that a repository will be available.

Commenters noted that with a clearer title, the purpose and limited application of the Rule would be more evident to members of the public who are not aware of the historical basis for the term "waste confidence." Commenters suggested that the title should more accurately reflect the true Federal action of licensing and relicensing of reactors and Independent Spent Fuel Storage Installations (ISFSIs) and should accurately reflect the purpose of the analysis, evaluation, and conclusions of the study. Suggestions included "Storage of SNF [Spent Nuclear Fuel] after Licensed Term of Operations" and "Storage of Spent Nuclear Fuel for the Period After License Term of Reactor Operation."

RESPONSE: After considering the comments, the NRC has decided to change the title of the Rule. The title of a rule should convey the nature and content of the rule. This Rule represents a change in the format from past Waste Confidence proceedings. Because of the decades of experience with safely storing spent fuel and the fact that the Commission has issued a GEIS to support the Rule, which provides a detailed analysis of the environmental impacts associated with continued storage, the nature of the Rule has changed and the need for a separate Waste Confidence Decision no longer exists. The current Rule primarily codifies the environmental impact of continued storage of spent fuel beyond the licensed life for operation of a reactor. The Rule is used in reactor and ISFSI licensing and relicensing proceedings to address the

environmental impacts of storage of spent fuel for the period after the licensed life for operation of the reactor and before disposal. Including “waste confidence” in the title of the proposed Rule was intended to bridge past rulemakings on the topic to the current effort recognizing that there is no separate Waste Confidence Decision included in the current proceeding. However, it is clear from the comments that using the historical term “waste confidence” in the title has caused some confusion. The Commission agrees that a title that more accurately reflects the Rule content is more appropriate. Therefore, the NRC has changed the title of the Rule to “Continued Storage of Spent Nuclear Fuel.” The title of the GEIS was also changed accordingly.

(45-6-3) (59-3) (245-52-2) (246-14-1) (262-10) (326-36-2) (327-17-3) (329-6-4) (447-1-3) (473-18-5) (532-14) (603-18) (745-4) (827-6-11) (827-1-3) (841-6) (913-15) (942-11)

D.2.1.5 – COMMENT: Several commenters expressed concern with the use of the term “waste confidence.” Commenters stated that the term is an oxymoron, and a way for the U.S. Department of Energy (DOE) and the industry to compensate for not solving the back end of the nuclear fuel cycle. Commenters objected to the arrogance of the NRC to claim that it has confidence and stated that the NRC is putting the solution off for future generations, which allows nuclear plants to continue producing spent nuclear fuel (spent fuel) without a scientifically proven solution for its safe disposal. One commenter stated that the NRC mischaracterizes waste confidence by defining it solely as a storage issue, that the issue is really a geologic repository issue, and that the NRC should declare that there is no longer a basis for waste confidence.

Commenters indicated that they have no confidence in the current waste plans proposed by the NRC. Commenters expressed no confidence that there will ever be an adequate solution to permanent storage (disposal) of spent fuel because there is no way to guarantee containment for hundreds of thousands of years. Commenters noted that the experience with Yucca Mountain and the changing timelines for repository availability shows that nobody can have confidence in the availability of geologic storage. One commenter indicated that confidence is at least implicitly required because without such confidence it would be immoral to continue making nuclear waste. Commenters stated that no definition of “waste confidence” is provided and that usage of the term is twisted from its normal uses.

One commenter expressed the view that the term is a historical artifact from the NRC’s policy determination addressed in the Natural Resources Defense Council (NRDC) petition for rulemaking and the subsequent court decision. The commenter stated that the term fails to transparently capture the purpose of the proposed Rule, which relates primarily to the storage of spent fuel after the end of a reactor’s licensed operating life, and encouraged the NRC to discontinue use of the term.

RESPONSE: The NRC acknowledges the skepticism expressed in many of the comments. Many years have passed since the original date for repository availability and no repository is available. The term "waste confidence" has historically indicated the Commission's belief or "confidence" that a repository would be available for the disposal of spent fuel and that spent fuel could be safely stored without significant environmental impacts until disposal. As discussed in the GEIS, the Commission continues to believe that a repository is likely to become available within 60 years of the end of a reactor's licensed life for operation. The analysis in the GEIS acknowledges the uncertainty inherent in this prediction regarding repository availability and presents two additional timeframes: 100 years of additional storage and indefinite storage. Further, as discussed in Appendix B, the Commission believes that it is technically feasible to safely store spent fuel. For the reasons given in the response to Issue 4, the NRC has removed "waste confidence" from the title of the GEIS and the Rule.

(30-1-1) (30-11-1) (30-21-10) (30-13-3) (30-1-4) (30-6-4) (30-1-7) (112-15-1) (112-11-2) (112-9-3) (112-9-4) (112-5-7) (112-11-8) (163-14-1) (163-24-1) (163-49-1) (163-51-1) (163-9-4) (163-36-5) (230-2) (245-5-1) (245-35-3) (250-11-3) (277-8) (325-3-1) (326-56-1) (326-6-1) (327-36-1) (328-11-3) (419-7) (470-1) (532-1) (532-10) (532-2) (532-3) (640-1) (679-2) (827-1-2) (890-6) (910-1) (910-5) (919-1-5) (933-1) (937-15) (938-13)

D.2.2 Comments Concerning the Rulemaking Process

D.2.2.1 – COMMENT: One commenter encouraged the NRC to carefully consider the economic impact of regulations on spent fuel storage and transportation.

RESPONSE: It is not clear whether the comment was referring to this rulemaking in particular or regulations in general. A regulatory analysis describes the cost and benefits to licensees of implementing any given rule and looks at the cost and benefits of alternatives. Although the NRC does prepare a regulatory analysis for rules that impose requirements on licensees, it did not prepare a regulatory analysis for this Rule because the Rule does not impose any requirements on licensees. No changes were made to the GEIS or Rule as a result of this comment.

(245-9-2)

D.2.2.2 – COMMENT: Several commenters expressed support for the Court of Appeals decision, which led to the start of this rulemaking effort. One commenter indicated that the only reason the public is having an opportunity to comment is that the Court of Appeals vacated the 2010 Waste Confidence Rule. Other commenters noted the origin of the current proceeding being the Court of Appeals decision on the 2010 Rule. Commenters supported those that brought the 2010 Rule to court and the Court of Appeals decision.

RESPONSE: The NRC disagrees with the comments in part. During development of the 2010 Waste Confidence Rule, the public was provided an opportunity to provide comments on the proposed Rule and draft Waste Confidence Decision. Comments received on those documents were reflected in the final documents for the 2010 Rule (NRC 2010a). While it is correct that the NRC would not have issued the proposed Rule and the draft GEIS at this time, the NRC has historically reevaluated Waste Confidence every 5 to 10 years. In fact, the NRC was involved in pre-scoping activities related to continued storage when the Court of Appeals vacated the decision and the NRC initiated this rulemaking. The NRC notes the support for the Court of Appeals decision made by various commenters and no further response is provided. No changes were made to the GEIS or Rule as a result of these comments.

(30-5-3) (163-48-1) (327-18-1) (377-5-7) (935-2)

D.2.2.3 – COMMENT: Several commenters requested that the Commission reverse the NRC's decision on the alternatives considered in the GEIS. The commenters stated that the Commission should treat the scoping document and decision on alternatives under the standards established for interlocutory review by the Commission in 10 CFR 2.341(f)(2). The commenters further stated that the Waste Confidence rulemaking proceeding should be considered an adjudication within the meaning of 5 USC Section 551(7), given that the result of the rulemaking proceeding will be an Order by the Commission that directly affects ongoing licensing proceedings and future licensing proceedings.

RESPONSE: The NRC disagrees with the comments. As explained by Chairman Allison Macfarlane in the Commission's letter responding to the petition (NRC 2013i), "[t]he NRC has determined that the notice-and-comment process, rather than reliance on adjudicatory briefings, is the appropriate means to ensure there is ample opportunity for public participation in the Waste Confidence matter. As in other rulemakings, the Commission does not plan to solicit briefs and issue merits decisions on the staff's scoping report or other specific issues, and no NRC rule or notice contemplates petitions for Commission review of NRC staff scoping documents." No changes were made to the GEIS or Rule as a result of these comments.

(1-5) (1-6) (1-7) (1-8)

D.2.2.4 – COMMENT: Some commenters expressed concern with the NRC rulemaking process. Commenters stated that the NRC's rulemaking process is vague because it uses complex terminology, and is contradictory, obtuse, demoralizing, futile, and a sham. Commenters expressed concern about the integrity and independence of the NRC's rulemaking process. One commenter stated that the NRC decisionmakers hide in the anonymity of the Commission process knowing that they will never be held personally accountable. Commenters expressed concern about the NRC's compliance with the intention and spirit of relevant Federal laws governing the processes of regulatory agencies, including NEPA and the Administrative Procedure Act (APA).

Commenters stated that if members of the public make comments or criticisms, technical arguments, or point out design flaws, the comments disappear into the rulemaking process. Commenters noted that issues moved to rulemaking take years to complete. Commenters indicated that the NRC is not transparent and there is no real opportunity for the public to have any meaningful input into how reactors are run or how spent fuel is stored. Commenters asserted that anything that falls outside of the question being asked in the Rule is not considered and therefore, the nature of the dialogue itself limits inquiry and intelligent discussion. Commenters stated that the NRC should put safety ahead of industry profit in considering the rulemaking.

One commenter expressed concern over the "revolving door" between the nuclear industry, the regulatory agency, and the pro-nuclear academic departments and institutions—thus leading the commenter to believe that the NRC is an "industry-captured," biased regulator with a reassuring front end (website) and a structurally compromised back end. Another commenter supports redesigning the entire legal basis for the NRC's regulatory enforcement.

RESPONSE: The NRC generally disagrees with the comments. The NRC's rulemaking process is straightforward and well-established. In accordance with the APA, which provides the basis for rulemaking across the Federal government, the NRC prepares a proposed rule that is published for public comment. After carefully evaluating the public comments, the NRC prepares and publishes the final rule, addressing the public comments in the accompanying SOC. Public comments provide many useful insights and suggestions, resulting in changes to regulatory actions as appropriate. The Commission itself is the decisionmaker at the NRC for most rulemakings, including this one; the contents of rules and responses to public comments are determined by a majority vote of the five Commissioners. The votes and individual views of all Commissioners are made public.

The comment is correct that significant rulemakings are typically not completed quickly. To ensure appropriate public input and a sound regulatory basis, the process necessary for developing a well-supported rule does take time. Rulemakings typically take about two years to complete after development of the basis or rationale for the rule. For highly technical rulemakings, the regulatory basis for a rule can take many additional years to develop before a rulemaking proceeding commences. However, the process can be completed sooner with the application of additional resources, as was done for this Rule and GEIS. The comment is also correct that items beyond the scope of any particular rulemaking are not considered in that rulemaking.

Terminology used by the NRC is sometimes unique to the NRC and the nuclear energy community and may not reflect common usage and definitions. The NRC has included a glossary of commonly used terms in the GEIS.

The NRC is an independent regulator that oversees the safety and security of nuclear facilities and materials. The NRC's mission does not include promotion of nuclear power. Throughout this rulemaking process, the NRC has developed documents that comply with its statutory obligations under the AEA, the APA, and NEPA, and NRC's regulations implementing those statutes.

The public can use several methods to provide input into how NRC-licensed facilities are operated and spent fuel is stored. The public can keep abreast of the NRC's regulatory activities through a large number of public meetings, including Commission meetings, advisory committee meetings, adjudicatory hearings, and NRC staff meetings. The latter include most technical meetings with licensees, trade organizations, and public interest groups. Information on open meetings is available on the NRC's website at http://www.nrc.gov/public-involve/public-meetings.html. Members of the public can also provide comments on proposed rules and policies, licensing actions, and draft technical documents, including draft regulatory guidance and draft EISs. Documents available for public comment are posted on the NRC's website at http://www.nrc.gov/public-involve/doc-comment.html.

Members of the public can submit a petition requesting enforcement action against specific licensees if they believe the licensee is not in compliance with regulatory requirements. The petition process described in 10 CFR 2.206 is the primary mechanism for the public to request enforcement action by NRC in a public process. This process permits anyone to petition the NRC to take enforcement action related to NRC licensees or NRC-regulated activities. Depending on the results of its evaluation of a Section 2.206 petition, the NRC may modify, suspend, or revoke an NRC-issued license or take any other appropriate enforcement action to resolve a problem. The Section 2.206 process provides a mechanism for anyone to request enforcement action and obtain the NRC's thorough and objective evaluation of the petitioner's concerns. More information on requesting enforcement actions and reporting safety concerns can be found in the NRC's brochures on the Public Petition Process and Reporting Safety Concerns to the NRC. Information on how to request enforcement actions is available on the NRC's website at http://www.nrc.gov/about-nrc/regulatory/enforcement/petition.html.

Members of the public can also submit petitions for rulemaking to request the NRC to develop, change, or rescind any of its regulations. Section 2.802 of 10 CFR (10 CFR 2.802) describes the petition for rulemaking process. This process allows anyone to petition the NRC to revise the regulations. Depending on the results of its evaluation of the request, the NRC may modify existing regulations, add new regulations, or rescind a regulation. Information on submitting a petition for rulemaking is available on the NRC's website at http://www.nrc.gov/about-nrc/regulatory/rulemaking/petition-rule.html. Issues related to the NRC's regulatory enforcement are beyond the scope of the GEIS and Rule. No changes were made to the GEIS or Rule as a result of these comments.

(112-31-3) (112-31-6) (120-5) (327-6-1) (329-7-3) (603-3) (754-1)

D.2.2.5 – COMMENT: Several commenters expressed general concern on the rulemaking process, how the Rule would be used in licensing actions, and the public's due process.

Commenters stated that the proposed Rule obfuscates and circumvents the public's due process in addressing the adverse environmental impacts created from continued storage of spent fuel. Commenters stated that the NRC is using the rulemaking as a means of cutting out the public. Commenters felt that it is misleading for the NRC to state the rulemaking is not a licensing action because it has been used by the Atomic Safety and Licensing Board to reject spent fuel-related contentions in a legal proceeding regarding license extensions and that the Rule provided the basis for licensing. Commenters objected that the Rule results in the public being prevented from raising and litigating issues regarding the environmental impacts of continued storage during licensing actions for either power reactors or ISFSIs. Commenters stated that the NRC action would effectively block any future public or State government interventions regarding continued storage in future licensing proceedings. Commenters indicated that this attempt to bar waste disposal issues in license extension proceedings reinforces public suspicion that the NRC is untrustworthy in its commitment to transparency and to public health and safety.

Commenters stated that the GEIS would serve as a pre-ordained license approval for all future licensing actions, at least insofar as the generation of spent fuel, its storage, and its ultimate disposition is concerned without any further processing, hearings, intervention, or critical site-specific review. Commenters stated that the Rule allows for indefinite onsite storage of spent fuel by stating that onsite storage is safe without site-specific environmental review and public hearing rights to address the question of whether generation of additional spent fuel is justifiable in the absence of a repository. Commenters stated that adopting the GEIS at any existing facility should require a license amendment process because the original license did not contemplate that spent fuel may exist at the site indefinitely, and that the license term has effectively been extended indefinitely, thereby circumventing the normal license amendment procedures. One commenter stated that the GEIS results must be incorporated into every license using an amendment process that would include opportunity to intervene and request a hearing by members of the public.

Commenters complained that issues on the possible environmental consequences, possible mitigation, the manner that spent fuel is stored, or the timeframe for continued storage may not be considered in deciding whether to allow spent fuel generation or storage to continue. Commenters stated that the GEIS fails to provide the necessary environmental analysis sufficient to justify eliminating consideration of spent fuel disposal or storage impacts from every licensing proceeding as proposed in the Rule. Commenters stated the GEIS provides no mechanism for integrating costs and impacts into site-specific licensing decisions, and that this failure is contrary to the Supreme Court's opinion in *Baltimore Gas & Elec. Co. v. NRDC.*

A commenter indicated that because of the Rule Congress has lost any sense of urgency in solving the nation's nuclear waste issues. Another commenter stated that the GEIS and Rule may serve to facilitate, accommodate, and encourage continued delays toward spent fuel disposal.

One commenter stated that if the Commission desires to promote nuclear energy, the responsible approach would be to strengthen, not weaken, the requirements for the prompt and safe disposal of spent fuel. The commenter stated that instead of accommodating the detachment of spent fuel disposal responsibilities from nuclear energy generation and development, the Commission should maintain the integral connection between the generation of spent fuel and the proper and timely spent fuel disposal.

One commenter stated the Commissioners must compile evidence and make decisions and then tell the public what the decisions are and why they were made.

RESPONSE: The NRC disagrees with the comments. In this proceeding the NRC has prepared a GEIS that analyzes the environmental impacts of continued storage and provides a regulatory basis for the Rule. As required by the APA and NEPA, the NRC solicited public input on the draft GEIS and proposed Rule.

Adopting the impact determinations in the GEIS by Rule does not authorize the production or storage of spent fuel, nor do the GEIS or Rule amend or extend the term of any license. The GEIS and Rule do not apply to already completed licensing actions. NEPA does not require an agency to reexamine major Federal actions already taken. The GEIS and Rule are applicable only to future NRC licensing actions. The GEIS and Rule will be used in licensing and relicensing reviews for power reactors and ISFSIs to address the NRC's NEPA obligation to assess the environmental impacts of storage for the time between the end of the licensed life for operations and disposal of the spent fuel. The GEIS and Rule will not be used to address the impacts of spent fuel storage during a proposed license term. The impacts of storage during a proposed license term, as distinct from the timeframes of continued storage covered by the Rule, would be subject to the safety and environmental review as part of that review. Finally, NEPA does not require the NRC to reopen previously issued licenses to consider the results of the GEIS. Under NEPA, the environmental reviews for those facilities were sufficient at the time the NRC issued the license.

In *New York v. NRC*, the Court of Appeals approved this preclusive effect for rules with conservative bounding assumptions, but invalidated the NRC's generic Rule because of three deficiencies. The NRC acknowledges, as the Court of Appeals observed, that there may be some site-specific characteristics that warrant a departure from a generic process like this rulemaking. Thus, the Commission has provided for these situations through its regulations in 10 CFR 2.335, which allows parties to adjudicatory proceedings to petition for the waiver of or an exception to a Rule in a particular proceeding. For more information on waivers, see Section D.2.4.7 of this appendix.

As an independent regulatory agency with delegated responsibility under the AEA and other statutes, the NRC takes no position on the wisdom of nuclear power. The NRC does not create national policy for disposal of spent fuel. That responsibility lies exclusively with Congress and the President. The NRC is responsible for implementing national policy set by Congress and the President as delegated to the NRC by statute. The NRC's primary responsibility is to ensure that the production and utilization of nuclear materials provides adequate protection for the public health and safety and the common defense and security. The NRC is also obligated under NEPA to evaluate the reasonably foreseeable environmental impacts of its licensing actions. In the GEIS, the NRC has evaluated the environmental impacts of continued storage of spent fuel, including the impacts from an unlikely scenario in which a geologic disposal facility does not become available. The NRC also analyzed whether it is feasible to store spent fuel safely over these timeframes and concluded that it is. However, the NRC does not set national policy on the ultimate disposal of spent fuel, and therefore cannot decide the term for which spent fuel will be stored at reactor sites. No changes were made to the GEIS or Rule as a result of these comments.

(221-2) (246-32-1) (327-13-3) (328-14-1) (377-5-10) (473-6-1) (611-15) (619-1-4) (619-1-9) (646-22) (688-3) (691-5) (700-6) (704-10) (706-1-5) (720-1) (738-4) (821-5) (836-13) (836-24) (836-9) (889-4) (897-2-1) (897-7-1) (919-1-18) (919-1-2) (919-1-3) (930-1-17) (930-1-2) (930-1-6)

D.2.2.6 – COMMENT: One commenter submitted a petition for rulemaking as part of his or her comments. The petition requested that the NRC revise and integrate is regulations regarding spent fuel storage and disposal in a cohesive and consistent way. The commenter stated that the revision should include Table S-3, Table B-1, and 10 CFR 51.53(c) and 51.71(d).

RESPONSE: The petition has been docketed as PRM-50-30 and was noticed on April 21, 2014 (79 FR 22055). The petition will not be addressed in this rulemaking, and no changes were made to the GEIS or Rule as a result of this comment.

(897-7-20)

D.2.2.7 – COMMENT: Many commenters requested the timely completion of the Rule and GEIS. Commenters stated that timely resolution of the rulemaking is important and that the rulemaking should remain a priority and be completed in a quick and efficient manner. Commenters indicated that the NRC used a transparent, open, and efficient effort with ample opportunity for public involvement. Commenters noted that it is important to complete the rulemaking so that progress on both plant licensing and spent fuel management can continue. The commenters noted that licensing decisions are essential for long-term power planning and other business decisions, such as schedules for capital improvements, and that this essential decision-making will remain disrupted and inefficient until licensing decisions resume. Commenters noted that the rulemaking will enhance the efficiency in individual licensing reviews by using the GEIS to satisfy the NEPA requirements with regards to continued storage of spent

fuel, which are the same or similar at each site. One of the commenters stated that because the NRC has now established a clear path and is well along the way to generic resolution of the remanded issues, the staff should promptly recommend to the Commission options for resumption of adjudicatory reviews.

Commenters praised the NRC for its handling of the rulemaking process. Commenters noted that the rulemaking satisfied the Court of Appeals' remand criteria. One commenter stated that the rulemaking should serve as a benchmark for other significant NRC activities because extended schedules have become the rule. Another commenter noted that some of the environmental reviews for licensing actions have slipped as resources have become diverted to support the GEIS effort and that those resources should promptly be returned so that further delay in adjudicatory proceedings or licensing issuances is avoided.

RESPONSE: The NRC agrees with the comments in part and disagrees in part. As evidenced in the Commission's staff requirements memorandum (SRM-COMSECY-12-0016; NRC 2012a) directing the NRC to complete this rulemaking in 24 months, this rulemaking has been a high priority for the Commission and the NRC. With the completion of this rulemaking, the NRC has satisfied the Commission's directions in CLI-12-16 (NRC 2012b) and SRM-COMSECY-12-0016 (NRC 2012a) and completed a NEPA review of continued storage that can be used in future site-specific licensing actions. However, two things must occur before final licensing decisions can be made: (1) the Rule must become effective, which normally occurs 30 days after publication of the final Rule and (2) the Commission must issue an Order to lift the stay on the issuance of final licensing actions that it imposed in CLI-12-16 (NRC 2012b). Once these actions occur, and assuming no other impediments to the issuance of a final decision exist, the NRC will be able to proceed toward final decisions on licenses and license renewals.

The NRC notes the support for the rulemaking and no further response is required. Resource allotment for other NRC activities is beyond the scope of this GEIS and Rule. No changes were made to the GEIS or Rule as a result of these comments.

(30-7-1) (30-3-2) (30-7-2) (30-23-3) (30-7-3) (30-20-4) (30-7-4) (30-23-5) (30-7-9) (45-14-1) (45-15-3) (45-4-4) (60-4) (112-21-4) (115-2) (118-2) (118-5) (163-17-3) (163-18-5) (179-1) (182-3) (212-5) (213-5) (219-3) (244-11-1) (244-2-4) (244-7-4) (244-4-5) (245-1-2) (245-18-4) (246-19-1) (246-12-2) (246-8-3) (246-1-4) (246-20-5) (250-14-2) (250-21-2) (250-24-3) (250-62-3) (250-65-3) (250-14-4) (250-32-4) (250-15-5) (250-61-5) (250-6-6) (250-6-8) (253-7) (273-4) (307-5) (308-3) (325-16-4) (325-4-4) (325-13-7) (326-25-4) (398-3) (399-3) (400-3) (535-2) (535-5) (549-1) (549-4) (555-2) (598-7) (601-1) (601-4) (638-2) (642-1) (672-4) (685-2) (685-5) (689-2) (694-1-13) (694-1-4) (694-1-8) (697-1-17) (697-1-5) (697-1-8) (827-1-1) (863-2) (948-2) (948-5)

D.2.2.8 – COMMENT: Several commenters addressed the inadequacy of the 2-year timeframe for completing the Rule. Commenters noted that the NRC had previously indicated that the analysis of long-term spent fuel storage impacts would take until 2019 and therefore, the NRC

would not be able to gather the necessary information in 2 years. Commenters stated that an EIS generally takes 7 years and is being jammed into 2 years. Commenters stated that the rushed process is a scheme and a fraud perpetrated on the taxpayers and the rate payers. Commenters indicated that the schedule was unrealistic, imprudent, and arbitrary. Commenters stated that the NRC should take into account the thousands of people opposed to the 2-year schedule. Commenters stated that typos and grammatical errors contained in the documents are an indication of the rush to complete the EIS.

Several commenters indicated that the NRC was rushing through the process to industry and that the public will suffer as a consequence. Commenters stated that the reason for pushing the GEIS and Rule is to overturn the NRC's forced moratorium on reactor licensing and relicensing. One commenter noted that the NRC's goals are to protect the people and the environment and not to promote nuclear energy production or ensure its profitability.

Commenters indicated that the NRC should take whatever time is necessary to study continued storage of spent fuel. Commenters noted that in *New York v. NRC*, the Court of Appeals ordered the NRC to conduct a full analysis of the potential environmental effects of storing spent fuel onsite at nuclear plants on a permanent basis. Commenters stated that the NRC must resolve the many technical issues such as long-term integrity, vulnerability, deterioration, and accidents before going forward with the Rule. One commenter suggested that the NRC extend the time for completing the GEIS and involve an appropriate spectrum of stakeholders to develop a meaningful and substantive GEIS.

One commenter stated that the NRC should not continue with the Rule until the National Academies finished its quality assurance review to determine the adequacy of the NRC's safety regulations.

RESPONSE: The NRC disagrees with the comments. The NRC is an independent regulator that does not promote nuclear energy. The Rule and GEIS are considered a top priority for the agency, and resources and energy were put into this effort to complete a technically sufficient assessment in the 2-year timeframe directed by the Commission. Further, the NRC routinely completes EISs in about 2 years. The 7-year timeframe that the comments reference relates to a different project that was intended to provide a more comprehensive and detailed analysis of issues related to spent fuel transportation and storage that goes well beyond the knowledge necessary to assess the environmental impacts of continued storage.

For this rulemaking, the NRC has concluded that sufficient information exists to perform a generic environmental analysis of the continued storage of spent fuel after a reactor's licensed life for operation. It is not necessary for the NRC to resolve all of the safety issues that might arise during continued storage before conducting the analysis. A more detailed discussion of the feasibility of safe storage is available in Appendix B. Further, NEPA requires the NRC to consider the information available at the time of its environmental analysis, which the NRC has

done in preparing the GEIS and Rule. The NRC is aware that future research and scientific advancements, like the ongoing study of the Fukushima accident by the National Academy of Sciences, could someday challenge the conclusions in the GEIS. If that were to occur, the NRC would revisit this assessment to ensure that the relevant decisionmakers continue to have an understanding of the environmental impacts of continued storage.

The NRC acknowledges that there were typos and other typographical errors in the draft GEIS and proposed Rule. The NRC strives to produce high-quality documents with few errors, but in any document of this size there are likely to be a few typos that are not captured by the NRC's editorial process. The NRC has reviewed the final documents to minimize typos and other typographical errors. No changes were made to the GEIS or Rule as a result of these comments.

(30-12-1) (30-22-6) (45-11-1) (222-10) (222-6) (245-15-1) (250-7-6) (327-2-2) (328-11-4) (329-15-2) (329-25-4) (377-5-11) (377-5-13) (443-4) (556-1-7) (610-1) (610-12) (611-8) (684-6) (867-3-34) (919-4-14)

D.2.3 Comments Concerning the Rule Language

D.2.3.1 – COMMENT: One commenter argued that the language in the proposed Rule indicates that it is feasible to have a mined geologic repository within 60 years following the licensed operation of a reactor, is inconsistent with and not supported by Appendix B of the GEIS and was not justified in Appendix B. The commenter noted that the GEIS indicates that in recognition of the uncertainty in reaching a national consensus on repository selection, the third timeframe assumes that a repository never becomes available. The commenter stated that the GEIS deals primarily with technical feasibility not social or political feasibility.

Another commenter agreed that it is reasonable to assume that a repository will be available within 60 years of the end of a reactor's operating life. The commenter noted that although case law does not require the inclusion of a timeframe for repository availability, prior Waste Confidence rules have included a timeframe. The commenter suggested rule language that would express the Commission's reasonable assurance that a mined geologic repository can be available "when necessary." The commenter stated that this approach would acknowledge the inherent predictive nature of conclusions regarding repository availability and is consistent with the description of the Commission's repository availability finding provided in *NRDC v. NRC*. The commenter stated that this approach would not run afoul of the 2012 remand as the agency has now fully met its NEPA obligations by assessing the impacts of a failure to establish a repository in the GEIS, and therefore, the NRC can continue to find (based on its expert evaluation) that a repository will be available when necessary.

RESPONSE: The NRC agrees in part and disagrees in part with the comments. The language in the proposed Rule regarding the feasibility of having a repository within 60 years is supported

by and is consistent with Appendix B of the GEIS. The GEIS analyzes three scenarios for repository availability: the short-term timeframe (60 years beyond the licensed life for operations of a reactor), the long-term timeframe (an additional 100 years), and the indefinite timeframe (no repository is sited). The GEIS identifies the short-term timeframe as the most likely scenario. The NRC disagrees that the 60-year timeframe for repository is not supported by Appendix B. As stated in Appendix B, the NRC continues to believe that a repository can be sited, licensed, and constructed within the short-term timeframe. Appendix B acknowledges that societal and political issues surrounding repository selection could influence the process. However, the United States national policy remains that spent fuel is to be disposed of in a geologic repository and the NRC has concluded that the construction of a repository is technically feasible.

The NRC disagrees with the recommendation that the Rule language state that the Commission has reasonable assurance that a repository can be available "when necessary." The NRC agrees that there is no legal requirement to include a timeframe in the Rule language. As explained in Section D.2.1.1 of this appendix, the Commission has decided not to include a timeframe in the Rule language. No changes were made to the GEIS or Rule as a result of these comments.

(27-1) (827-6-2)

D.2.3.2 – COMMENT: One commenter suggested substitute language for the Rule that would read as follows: "The Commission will ensure that an EIS be developed analyzing the environmental impacts of storage of spent fuel beyond the licensed life for operation of a reactor jointly and cooperatively with those state, regional and municipal agencies situated in the area where the reactor is sited and which are charged with land use and environmental and socioeconomic concerns."

RESPONSE: The NRC disagrees with the comment. The NRC has determined in the GEIS that the environmental impacts of continued storage beyond the licensed life for operations of a reactor can be analyzed generically. The NRC believes that a generic approach is appropriate because the GEIS makes impact determinations that apply to all reactors and spent fuel storage sites. The NRC's confidence in these determinations about continued storage is supported by numerous environmental reviews of spent fuel storage. Spent fuel storage during the period of operations has been considered in site-specific licensing of new reactors, ISFSIs, and license renewal. Finally, concerned parties who satisfy the requirements at 10 CFR 2.335 for a waiver will be able to raise issues related to continued storage in site-specific license application proceedings.

The environmental impacts of a nuclear plant or spent fuel storage facility must be considered during the site-specific licensing review for that particular facility. In this respect, this GEIS satisfies only a small portion of the NRC's NEPA obligations related to the issuance of a reactor

or spent fuel storage facility license by generically evaluating the environmental impacts of spent fuel storage beyond the facility's license term. Prior to the completion of a facility licensing action, the NRC will conduct a site-specific environmental review and document the results of this review in an Environmental Assessment (EA)/finding of no significant impact (FONSI) or EIS. Whether for a power reactor or ISFSI, that site-specific environmental review will address, among other things, the environmental impacts of spent fuel storage during the license term. In accordance with 10 CFR Part 51, State and local agencies would have the opportunity to provide input in the site-specific environmental reviews. No changes were made to the GEIS or Rule as a result of this comment.

(354-2)

D.2.3.3 – COMMENT: One commenter suggested that the NRC establish a set of rules and policies predicated on the possibility that no safe permanent solution to the problem of spent fuel will be demonstrated or available in the foreseeable future. The commenter stated that the Rule must specify that spent fuel must not be subject to abandonment under any circumstances, but must be fully retrievable and subject to continual monitoring at all times, until a scientifically verifiable, safe, and permanent solution to the nuclear waste problem has been "demonstrated beyond doubt."

RESPONSE: The NRC disagrees with the comment. The NRC already has regulations in place that address the safe storage of spent fuel: dry storage is addressed in 10 CFR Part 72 and pool storage is addressed in 10 CFR Parts 50 and 52. Storage in both spent fuel pools and dry casks is "retrievable" storage. Licensees are responsible for the safe storage of spent fuel and are not allowed to abandon the spent fuel. Further, the NRC considered a scenario in this GEIS where spent fuel must be stored onsite or at away-from-reactor sites for the indefinite future. No changes were made to the GEIS or Rule as a result of this comment.

(714-1-3)

D.2.3.4 – COMMENT: Several commenters suggested that the NRC include language in the Rule that requires transfer of spent fuel to a temporary location within 1 year, expedited transfer of spent fuel from pools, closure of pools at closed plants, and discontinue authorization of the use of pools out in the open for storage. Commenters suggested that the NRC include language to require that spent fuel be handled and stored using the absolute safest methods available regardless of what a cost-benefit analysis shows, require that all casks and pools withstand magnitude 11.0 earthquakes, require that pools and storage areas be able to withstand a total lack of cooling capabilities, and require that spent fuel transportation be done with full prior knowledge and agreement of all communities that the shipment transits through. A commenter suggested that the NRC must: (1) develop a program for low-rate property insurance to cover private citizens from radiation and nuclear damages from the NRC's storage of nuclear fuel, similar to current United States flood insurance, and that the NRC must provide

insurance subsidies for homeowners to cover the actual cost of this insurance plan; (2) amend the Affordable Care Act to provide full health and medical care to all persons damaged by accidental release of radiation from spent fuel storage; and (3) make 'whole' all persons and properties damaged by nuclear spent fuel accidents, including property buy out at full value and all relocation costs. The commenter also requested that the NRC: (1) keep manual and automatic radiation monitoring devices at all nuclear spent fuel storage locations and provide full public release of the data from those devices via the Internet; and (2) provide round-the-clock human monitoring of each fuel storage location with hourly logging of events and video recording that would be available to the public via the Internet.

RESPONSE: The NRC disagrees with the comments. These suggested items for inclusion in the Rule are beyond the scope of the GEIS and Rule. As explained in Section 1.6.2.2 of the GEIS, the GEIS and Rule do not propose or impose safety requirements for the storage of spent fuel. The GEIS and Rule consider only the continued storage of spent fuel in accordance with present NRC requirements and assess the environmental impacts accordingly. Issues related to type of insurance program requested are not within the NRC's authority under the AEA.

Members of the public can submit petitions for rulemaking to request that the NRC develop regulations or change or rescind one of its regulations. Section 2.802 of 10 CFR (10 CFR 2.802) describes the petition for rulemaking process. This process allows anyone to petition the NRC to revise the NRC's regulations. Depending on the results of its evaluation of the request, the NRC may modify existing regulations, add new regulations, or rescind a regulation. Information on submitting a petition for rulemaking is available on the NRC website at http://www.nrc.gov/about-nrc/regulatory/rulemaking/petition-rule.html. No changes were made to the GEIS or Rule as a result of these comments.

(326-60-2) (326-60-3) (517-3) (618-9)

D.2.3.5 – COMMENT: One commenter requested clarification on whether the Rule applies to early site permit (ESP) applications. The commenter stated that previous waste confidence decisions and rules did not apply to ESPs and that the SOC and GEIS did not mention ESPs. The commenter requested that an affirmative statement be added to the GEIS and SOC to clarify that ESPs are not included. The commenter suggested text for inclusion.

RESPONSE: The NRC agrees with the comment that clarification of the scope of the proposed Rule change is appropriate. The NRC recognizes that neither the current language of the Rule, nor the proposed revision to that section, expressly addresses whether the Rule applies to ESP reviews. However, the NRC disagrees with the comment that ESPs are not covered by the Rule. The clear purpose of the regulation was to preclude the need for a site-specific analysis of the environmental impacts of continued storage for all power-reactor-related and ISFSI-related licensing actions, including spent fuel generated by new reactors. This purpose is evident from the Commission's intention in past Waste Confidence proceedings and the 2007

rulemaking on 10 CFR Part 52 to encompass waste produced by a new generation of reactors—including those licensed under the 10 CFR Part 52 regime, which includes ESPs (49 FR 34688; 55 FR 38472; 72 FR 49352). That the regulation did not expressly include ESPs in the list of reactor licensing actions under 10 CFR Parts 50 and 52 for which a site-specific analysis of the environmental impacts of continued storage is not necessary, coupled with the absence of an explanation as to why ESPs were not included in the regulation, is evidence that this was an oversight on the part of the NRC. Not including ESPs would also lead to the anomalous result—again, unexplained by the NRC—of precluding site-specific consideration of the environmental impacts of continued storage of spent fuel in licensing actions that result in the production of spent fuel, but at the same time allowing such site-specific consideration at an earlier licensing stage—the ESP—which never results in the production of spent fuel. Accordingly, the NRC has consistently interpreted the Rule to include ESPs within the generic reach of that Rule as regards discussion of continued storage impacts in environmental analyses, and in the same manner applicable to those licenses explicitly listed in the Rule. This interpretation has been approved by several Atomic Safety and Licensing Boards. See e.g., *Exelon Generation Co., LLC* (Early Site Permit for Clinton ESP Site) (NRC 2004a) and *Dominion Nuclear North Anna, LLC* (Early Site Permit for North Anna ESP Site) (NRC 2004b). For these reasons, the language of the Rule has been revised to clarify that ESPs fall within the reach of the Rule. No changes were made to the GEIS as a result of these comments.

(810-3) (810-6) (810-7) (810-8) (810-9)

D.2.3.6 – COMMENT: One commenter noted that the revision in the proposed Rule to 10 CFR Part 51, Subpart A, Appendix B, Table B-1 “Summary of Findings on NEPA Issues for License Renewal of Nuclear Power Plants” was not consistent with the NRC’s policy on conversion to the metric system.

RESPONSE: The NRC agrees with the comment. The revision to Table B-1 has been updated so that the international unit (mSv) is shown first. No changes were made to the GEIS as a result of this comment.

(841-2)

D.2.3.7 – COMMENT: One commenter argued that the NRC has not clarified in its regulations that certain spent fuel issues not addressed in the GEIS may be addressed in individual licensing proceedings, thus requiring the NRC to supplement the GEIS to ensure that all issues are properly addressed, which will result in additional delays to the completion of the rulemaking. The commenter asserted that the GEIS should include guidance on which issues will be allowed to be considered on a site-specific basis following issuance of the GEIS. The commenter requested that the NRC consider amendments to 10 CFR 51.23(b), 51.53(c)(2), or 51.95(c)(2) to allow site-specific issues related to continued storage to be raised in licensing proceedings.

RESPONSE: The NRC agrees in part and disagrees in part with the comments. The NRC agrees that its regulations require consideration of a supplement to the GEIS under certain circumstances—namely, if there are substantial changes in continued storage relevant to environmental concerns, or if there are significant new circumstances or information relevant to environmental concerns and bearing on the proposed action or its impacts (10 CFR 51.72 and 51.92).

However, the NRC disagrees with the concerns expressed in the comment about the NRC's implementation of regulations in 10 CFR Part 51. Revised 51.23 precludes only challenges to the impact determinations in the GEIS. The scope of the GEIS includes only impacts of spent fuel related to its continued storage. Operational impacts associated with spent fuel, including impacts of fuel storage during the licensed life for operation (e.g., during the 40-year-term of a reactor operating license), are not covered by the Rule. Participants in individual licensing proceedings would be free to raise spent fuel storage issues related to operations in those proceedings to the extent permitted by applicable regulations. Accordingly, the NRC disagrees that any change to the scope of the GEIS is necessary.

Further, based on the analysis in the draft GEIS, and as confirmed in the final GEIS, the NRC has determined that a generic assessment of environmental impacts for each resource area is possible and appropriate. Therefore, the NRC does not believe that the environmental impacts of continued storage for any resource areas in the GEIS should be subject to a site-specific review. In addition, the NRC determined that amendments to 10 CFR Part 51 to address the concerns raised in the comment are not necessary at this time. No changes were made to the GEIS or Rule as a result of these comments.

(1-10) (1-26) (1-27) (1-29) (1-30) (1-4)

D.2.3.8 – COMMENT: One commenter stated that the NRC should either include a limit in the Rule on how long the spent fuel can remain in the spent fuel pool or should analyze the impacts of pool storage for the long-term and indefinite timeframes. The commenter expressed the view that without a time period for storage in the Rule, it is reasonably foreseeable that storage in pools could be indefinite and the GEIS wrongly assumes that spent fuel will only be stored in the pools for 60 years.

RESPONSE: The NRC disagrees with the comments. Based upon the current regulatory framework, the GEIS reasonably concludes that spent fuel will likely be stored in spent fuel pools for no more than 60 years beyond the licensed life for operation of a reactor, that is, by the end of the short-term timeframe. In accordance with the license-termination requirements for power reactors in 10 CFR 50.82(a)(3) and 52.110(c), decommissioning will be completed within 60 years of permanent cessation of operations. This requirement applies equally to the spent fuel pools at power reactors. Although the regulations at 10 CFR 50.82(a)(3) and 52.110(c) allow the Commission to extend the time allowed to complete decommissioning and

"unavailability of waste disposal capacity" is one of the factors to be considered, the Commission will only approve the request when necessary to protect public health and safety. Therefore, a time limit on storage is unnecessary in the Rule. Accordingly, the NRC disagrees that the GEIS should include an analysis of spent fuel pool storage beyond the short-term timeframe because the NRC has provided a reasonable basis for its analytical assumption that the spent fuel will be moved from the pools by the end of the short-term timeframe. See Section D.2.16.10 of this appendix for additional information on the assumption that all spent fuel will be removed from the spent fuel pools within 60 years of the cessation of reactor operations. No changes were made to the GEIS or Rule as a result of these comments.

(897-6-12) (897-4-22) (897-6-9)

D.2.3.9 – COMMENT: One commenter stated that the NRC has no valid analysis on which it can rely for an evaluation of spent fuel disposal impacts. The commenter stated that 10 CFR Part 51, Subpart A, Appendix B, Table B-1 "Summary of Findings on NEPA Issues for License Renewal of Nuclear Power Plants" depends on the U.S. Environmental Protection Agency (EPA) standard for Yucca Mountain and an actual analysis and the review of the Yucca Mountain application is not complete so it is not clear that Yucca Mountain would meet the required standard. The commenter expressed the view that the existence of a standard does not provide any assurance or indication of the actual performance of a site. The commenter also pointed out the EPA standard only applies to Yucca Mountain and that the status for Yucca Mountain is uncertain.

RESPONSE: The NRC agrees in part and disagrees in part. The comment is correct that the NRC has not completed its analysis of the Yucca Mountain repository application and that the status of Yucca Mountain remains uncertain. The NRC disagrees that no reliance can be placed on the existence of the EPA standard. The DOE developed and submitted a license application that purports to demonstrate that the proposed facility meets NRC requirements, including the requirements that implement the EPA standards. The NRC would not license a repository that did not meet the applicable NRC regulatory requirements. As for the EPA standard only applying to Yucca Mountain, while that is correct, it is reasonable to believe that a comparable standard would be issued for other repository sites, if needed. No changes were made to the GEIS or Rule as a result of these comments.

(898-4-18) (898-5-21) (898-1-8)

D.2.4 Comments Concerning Miscellaneous Issues

D.2.4.1 – COMMENT: Several commenters argued that the NRC is required under the AEA to make reasonable assurance "safety" findings that spent fuel can be safely stored after the licensed life of the reactor and the availability of a permanent repository for spent fuel disposal. Another commenter disagreed and argued, as found in *NRDC v. NRC*, that safety findings about repository availability are not required under the AEA. One commenter noted that the

NRC acknowledged that these reasonable assurance findings are required by law, citing 78 FR 56778 n. 1. Further, the commenter argued that the NRC does not have sufficient technical understanding of the risks of continued storage to support these AEA safety findings and no study has attempted to predict the environmental impacts of indefinite or long-term continued storage. The commenter also noted that the NRC had started a long-term waste confidence project, but the commenter contended that this project is not yet ready to support the NRC's required AEA safety findings. The commenter requested that the NRC withdraw the proposed Rule until it has a basis for the reasonable assurance safety findings regarding continued storage.

Another commenter argued that without these safety findings, which cannot be part of the GEIS, the NRC has no authority to issue licenses or license renewals. Another commenter argued that compliance with *NRDC v. NRC* requires the NRC to assess (a) the availability of sufficient and safe spent fuel disposal capacity when it is necessary and (b) the safety of spent fuel storage in the meantime. This commenter also argued that the safety findings must demonstrate a technical basis for a reasonable level of "confidence" that reactor fuel will be isolated from humans and the environment as long as it remains radioactive, citing 44 FR at 34393. Finally, the commenter argues that nothing in *New York v. NRC*, can be read to eliminate the NRC's obligations to make AEA safety findings under *NRDC v. NRC* and *Minnesota v. NRC*.

Another commenter stated that AEA reasonable assurance safety findings must be supported by factual predictions based on technical evidence, and cannot be simple policy statements.

Several commenters stated that the NRC has acknowledged that it has no confidence that a facility will be available by any specific date, if ever.

One commenter asserted that the GEIS and *Federal Register* Notice provide ample support for the NRC to make reasonable assurance findings and requested that findings be included in the rule.

RESPONSE: The NRC agrees in part and disagrees in part with the comments. The NRC agrees that any decision to issue a license must be predicated on a Commission determination that the licensed activity can be performed in a manner adequate to protect public health and safety. This determination is based on technical analyses and judgment. However, this determination is made in accordance with the specific licensing process and is not part of the Commission's NEPA obligations.

The comments conflate reasonable assurance findings made in past waste confidence proceedings with AEA safety determinations made in the licensing process. The NRC typically refers to these safety findings as "reasonable assurance" findings (see Section 185 of the AEA), but for the purposes of this discussion they will be referred to as safety determinations that the

Commission makes in licensing facilities and activities. These AEA safety determinations should not be confused with environmental analysis under NEPA. While specific reasonable assurance findings were historically included in the waste confidence proceeding, those findings are not appropriate for this GEIS and are not necessary. Circumstances have evolved considerably since the inception of the waste confidence proceeding in the early 1980s. Since then, decades-long experience with the storage of spent fuel either in spent fuel pools or ISFSIs has demonstrated that spent fuel can be safely stored beyond the operating life of a reactor so long as that storage remains under the licensing and inspection processes currently in place.

Minnesota v. NRC

As noted in the comments, the *Federal Register* Notice associated with the proposed Rule and draft GEIS (78 FR 56776) contains a footnote referencing *Minnesota v. NRC*, in which the Court of Appeals held that the NRC must consider:

> whether there is reasonable assurance that an offsite storage solution will be available by the years 2007-09, the expiration of the plants' operating licenses, and if not, whether there is reasonable assurance that the fuel can be stored safely at the sites beyond those dates.

As *Minnesota v. NRC* explained, this remand was intended to "inquir[e] into the basis of those assurances of confidence" (Id. at 419). In the context of the 1984 waste confidence proceeding that responded to the Court of Appeals inquiry, the term "confidence" referred to the Commission's policy that it would not continue to issue licenses if it did "not have reasonable confidence that wastes can and will in due course be disposed of safely" (Id. at 415). The NRC then updated the Waste Confidence Rule in 1990 (55 FR 38474) and 2010 (75 FR 81037), the latter resulting in the Court of Appeals' remand in *New York v. NRC*. The actions taken by NRC in response to the remand conform to the AEA, NEPA, and other applicable legal requirements. The NRC is meeting its NEPA obligations with respect to continued storage with a GEIS. AEA obligations, including safety determinations, will continue to be met through the licensing process. As explained below, the AEA and the NRC's regulatory regime ensure that stored waste will continue to be governed under the license and regulatory controls after the end of a facility's current license, relying on the experience gained over the past 30 years and the current regulatory framework to ensure adequate protection of public health and safety. Further, the technical feasibility of continued storage over the three timeframes analyzed in the GEIS, and the conclusion regarding technical feasibility and timeframe of availability of a repository, undergirds the NRC's evaluation of the environmental impacts of continued storage activities.

Appendix B of the GEIS analyzes the technical feasibility of a geologic repository and the availability of sufficient repository capacity. It does so by evaluating both international and domestic progress on siting a geologic repository and the development of the scientific and technological tools necessary to the determination that a geologic repository is technically

feasible (see Sections B.2.1 and B.2.2 of the GEIS). This analysis provides the basis for the NRC's determination of technical feasibility; however, as stated by the Commission in the *Federal Register* Notice associated with the 2010 revision to the Rule: "[b]ecause the Commission cannot predict when [the necessary] societal and political acceptance will occur, it is unable to express reasonable assurance in a specific target date for the availability of a repository." In the GEIS, the NRC conducted an evaluation of the technical and scientific possibility of siting, developing, and operating a geologic repository. However, the determination of technical feasibility is distinct from the more-difficult-to-quantify effects that societal or political factors may have on the progress toward (and exact timing of) availability of a repository. As stated in the GEIS, although the prediction of a particular date when a geologic repository will become available is uncertain, the NRC believes that the timeframe needed to develop a repository is approximately 25 to 35 years and that a repository is likely to become available by the end of the short-term timeframe (see Section B.2.2 of the GEIS).

The GEIS also analyzes the technical feasibility of both wet and dry storage in spent fuel pools and casks, respectively for continued storage. The analysis considers proven storage methodologies, practical operating experience and the regulatory oversight provided by the current regulatory framework, allowing the NRC to determine that it is technically feasible to safely store spent fuel in either wet or dry storage for the short-term timeframe with only routine maintenance (see Section B.3 of the GEIS). For dry cask storage in the long-term and indefinite timeframes, the analysis considers the same factors analyzed in the short-term timeframe, along with aging management techniques, ISFSI construction, and cask replacement.

AEA safety determinations

The NRC regulations that govern licensing of storage facilities and those that govern licensing a geologic repository set criteria and standards by which these facilities must be designed, constructed, and operated. Implicit in these regulations is the confidence that they will be complied with and that sufficient enforcement tools will be available to prevent and address noncompliance. No person may store or possess special nuclear material, including spent fuel, without an NRC license (see Section 57 of the AEA). For instance, the regulations in 10 CFR Parts 50, 52, and 72 that apply to construction and operation of reactor spent fuel pools and ISFSIs establish stringent safety requirements for these facilities. The source of the NRC's determination that the licensed activity, once the license is granted, will not endanger public health is the fact that these facilities will remain under license after the end of the facility's period of operation, and therefore will still need to meet these safety standards, which are found in 10 CFR Part 50 or 52 for reactors and their spent fuel pools and 10 CFR Part 72 for ISFSIs. Some of the provisions for reactor safety bear directly upon the safe storage of spent fuel after licensed life for operation (see, for example, 10 CFR 50.54(bb); and 10 CFR Part 50, Appendix A, Criterion 61, which requires that spent fuel storage systems be designed to assure adequate safety under normal and postulated accident conditions). In addition, the Commission recently

declined to restrict the number of times a specific ISFSI license may be renewed (see 76 FR 8872). ISFSI renewal applications will be subject to all applicable regulatory requirements to justify safe operation during the requested license term, including appropriate aging management activities. Based on the expectation that the current, or even a more stringent, regulatory framework will continue to exist, and on the decades-long experience resulting in substantial technical knowledge about storage of spent fuel, the NRC concludes that spent fuel can be stored safely for the short-term, long-term, and indefinite timeframes (see Appendix B of the GEIS).

Comments regarding delay of other NRC projects and disposal

With respect to the long-term project on the regulatory basis for extended storage and transportation of spent fuel, see "Plan for the Long-Term Update to the Waste Confidence Rule and Integration with the Extended Storage and Transportation Initiative" (NRC 2011a). However, the comment is also correct that the NRC started that project, but it has since been deferred to allow the agency to address the remand from *New York v. NRC*. The NRC does not have to wait for the completion of that long-term project, or any other technical study, to issue the GEIS. NEPA requires that an agency conduct its environmental review based on the currently available scientific and technical information. NEPA does not require that the NRC wait until undeveloped information matures into something that later might affect the review (see *Marsh v. Oregon Natural Res. Council*). Finally, the NRC disagrees with the comment's suggestion that NRC must demonstrate a technical basis for confidence that spent fuel will be isolated from humans and the environment as long as it remains radioactive. Isolation of the spent fuel occurs with permanent disposal; in contrast, the Rule codifies the environmental impacts of continued storage of spent fuel, not its permanent disposal. No changes were made to the GEIS or Rule as a result of these comments.

(1-14) (473-5-1) (646-19) (693-1-7) (706-1-10) (706-1-13) (706-1-8) (706-1-9) (820-2) (827-6-1) (827-7-1) (827-5-10) (827-5-11) (827-5-2) (827-5-3) (827-6-6) (827-6-7) (827-5-9) (897-1-1) (897-2-10) (897-2-11) (897-2-12) (897-2-13) (897-2-18) (897-4-18) (897-7-18) (897-1-2) (897-2-21) (897-7-21) (897-1-3) (897-1-4) (897-1-5) (897-2-7) (897-2-8) (897-7-8) (897-2-9) (897-4-9) (898-1-1) (898-1-12) (898-5-24) (898-1-9)

D.2.4.2 – COMMENT: One commenter suggested that the NRC consider explaining that it currently cannot provide "assurance that SNF can be managed safely into the indefinite future," but that this is a problem that must be solved by Congress and other Federal agencies.

RESPONSE: The NRC agrees in part and disagrees in part with the comment. The NRC agrees with the comment that nuclear waste policy is the province of the Congress and the President, and that that policy responsibility has been delegated to the DOE, not the NRC. However, the NRC does not agree that spent fuel cannot be safely stored and managed for the indefinite future. The GEIS presents the NRC's analysis of how safe storage would likely be

managed over the short-term, long-term, and indefinite timeframes, and the NRC has concluded that safe storage is technically feasible (see Appendix B of the GEIS). In addition, the NRC notes that geologic disposal is a waste-management approach that would provide a permanent solution, and again, the NRC has concluded that geologic disposal remains technically feasible. No changes were made to the GEIS or Rule as a result of this comment.

(505-9)

D.2.4.3 – COMMENT: One commenter claimed that the NRC has said that the Federal courts cannot rule on the NRC's actions.

RESPONSE: The NRC disagrees with the comment. Under the AEA and the Hobbs Act, final rulemaking and licensing actions of the Commission are subject to judicial review in the U.S. Courts of Appeals. No changes were made to the GEIS or Rule as a result of this comment.

(112-1-5)

D.2.4.4 – COMMENT: A few commenters asserted that the GEIS and Rule represent a departure from past Waste Confidence decisions. One commenter asserted that the GEIS fails to assess key aspects of continued storage and thus fails to provide a regulatory basis for the Rule. The commenter believes that the statement of purpose in the GEIS is a fundamental departure from the previous waste confidence findings and that the NRC should acknowledge that there will no longer be waste confidence findings. This commenter noted that in contrast to the previous Rule, the proposed Rule finds only that it is feasible to safely store the spent fuel and that a repository will be available within 60 years. Another commenter also noted that, in a departure from earlier versions of 10 CFR 51.23, the new Rule does not explicitly incorporate a finding that sufficient capacity will be available.

RESPONSE: The NRC agrees in part and disagrees in part with the comments. The NRC acknowledges that the approach reflected in the GEIS and Rule differs from past Waste Confidence proceedings. For example, prior Waste Confidence proceedings included an EA and a FONSI, while this proceeding is structured around a GEIS. By going forward with a GEIS, the NRC has thereby gained the benefits of EIS preparation of providing the public with a more conventional and understandable format in discussing the environmental impacts associated with the continued storage of spent fuel as well as the availability of a repository for ultimate disposal. Further, the GEIS provides a more detailed and comprehensive analysis of the environmental impacts of continued storage than would be included in an EA and FONSI. The underlying assumptions in the GEIS address the issues assessed in the previous Waste Confidence findings as conclusions regarding the technical feasibility and availability of a repository and conclusions regarding the technical feasibility of safely storing spent fuel in an at-reactor or away-from-reactor storage facility. As a result of preparing its environmental analysis of continuing storage impacts in the GEIS, the NRC found it no longer necessary to have a

separate Waste Confidence Decision with findings (see, generally, Waste Confidence—Continued Storage of Spent Nuclear Fuel; 78 FR 56776 (proposed Sept. 13, 2013) and Appendix B of the GEIS). No changes were made to the GEIS or Rule as a result to these comments.

(704-1) (706-1-16) (898-4-11)

D.2.4.5 – COMMENT: Some commenters expressed a concern that the GEIS and Rule constitute an abandonment of the NRC's prior Waste Confidence policy. These commenters argued that the NRC's statement in the GEIS that, absent Congressional direction, it "may not deny a reactor license unless it determines that a license applicant has not met the NRC's regulatory standards for issuance of a license" is inconsistent with its statement that it "would not continue to license reactors if it did not have reasonable confidence that the wastes can and will in due course be disposed of safely."

RESPONSE: The NRC disagrees with the comments. The NRC continues to believe that spent fuel can and will, in due course, be removed to a repository. As stated in the GEIS, the NRC believes that a repository is likely to become available within 60 years of the end of a reactor's licensed life for operations. Furthermore, the policy of the Federal government continues to be disposal of spent fuel in a deep geologic repository (see BRC 2012). As discussed in Appendix B of the GEIS, the NRC believes spent fuel can be stored safely until a repository becomes available. Nothing in the statement regarding Congressional direction is inconsistent with the NRC's views about repository availability or feasibility. No changes were made to the GEIS or Rule as a result of these comments.

(473-9-15) (473-11-4)

D.2.4.6 – COMMENT: A commenter argued that the NRC cannot rely on any statements or analyses from the 2010 Waste Confidence update because that rule was vacated wholesale for being arbitrary and capricious. The commenter argues therefore that reliance on those statements or analyses is *per se* arbitrary.

RESPONSE: The NRC disagrees with the comment. The Court of Appeals vacated the 2010 Waste Confidence Rule (75 FR 81032) and EA for three identified deficiencies requiring further analysis, but did not invalidate the underlying analyses supporting adoption of the rule (see *New York v. NRC*). Substantial resource savings have been achieved by building on the earlier research and analysis regarding continued storage impacts, rather than starting from scratch; NEPA does not require otherwise. Rather, NEPA requires agencies to use high-quality and reliable information. In this case, that includes the research and analysis developed for the 2010 Waste Confidence update (75 FR 81037). Moreover, the NRC has verified that any data and analyses extracted from the 2010 EA used in preparing the GEIS remain valid and appropriate for use in the GEIS. No changes were made to the GEIS or Rule as a result of this comment.

(473-17-7)

D.2.4.7 – COMMENT: Commenters argued that the NRC's waiver provisions are inadequate to meet a requirement in *New York v. NRC* to give stakeholders an opportunity to raise site-specific issues during licensing proceedings. The commenters argued that the Court of Appeals conditioned the NRC's continued use of a generic analysis on the "Commission's use of conservative bounding assumptions and the opportunity for concerned parties to raise site-specific differences at the time of a specific site's licensing." Citing a recent Commission adjudicatory opinion, the commenters further argued that the waiver provisions in 10 CFR Part 2 are inadequate to allow for these site-specific opportunities because the NRC is unlikely to grant, and has never granted, a waiver. Commenters further argued that this waiver provision shifts the burden to identify site-specific issues to petitioners, which is ineffective and results in the NRC shedding its NEPA responsibilities by asking interested stakeholders to identify issues that NEPA requires the NRC to address.

RESPONSE: The NRC disagrees with these comments. The GEIS and Rule assess only generic issues, and appropriate site-specific impacts, like the impacts during facility operations for initial licensing reviews, will continue to be considered in the environmental reviews of individual licensing proceedings. In the development of the GEIS and the notice-and-comment rulemaking, the NRC has provided an opportunity for members of the public, Tribal governments, State governments, and various other organizations to raise site-specific considerations that might indicate that certain analyses or impact determinations cannot be generically resolved. Indeed, the comments received have led the NRC to make clarifying changes and add additional discussion to some portions of the GEIS and Rule. However, the NRC is not aware of, and the comments have not raised, any information that would cause the NRC to conclude that any of the generic impact determinations would be invalid at any particular site. Accordingly, if a participant in an NRC proceeding later seeks to revisit these generic analyses in an individual licensing proceeding based on asserted site-specific differences, it is appropriate to require the petitioner to satisfy the waiver requirements in the NRC's regulations (see 10 CFR 2.335).

The GEIS and Rule fully comply with NEPA and the NRC's NEPA implementing regulations. The process undertaken for this GEIS is not significantly different from the process for any other EIS: the NRC used a scoping process; issued a draft GEIS for comment; and has considered, responded to, and made appropriate changes in light of the comments received. The GEIS and Rule have benefitted greatly from consideration of the diverse and detailed public comments submitted.

While some commenters expressed frustration with the NRC's waiver provisions, the NRC disagrees that these provisions are inadequate to permit site-specific challenges in appropriate situations. The NRC's regulations at 10 CFR 2.335 allow participants in NRC proceedings to request that a rule not be applied, or be waived, in a particular proceeding because special circumstances are present that would prevent the application of the rule from satisfying the purpose of the rule. A participant may be able to support a petition for waiver upon a showing

that, due to site-specific special circumstances, the GEIS would not satisfy the NRC's NEPA obligation to evaluate the impacts of continued storage. For the reasons stated in the GEIS and Rule, including careful consideration of diverse public comments, the NRC has concluded that the impacts of continued storage can and should be resolved generically. However, the waiver process ensures that participants have opportunity to raise any site-specific circumstances that may arise in the future.

In this regard, the NRC does not agree that the Court of Appeals' discussion in *New York v. NRC* of site-specific considerations implied any view on the NRC's waiver provisions, as neither the validity nor application of 10 CFR 2.335 was before the Court of Appeals in that case. To the extent that 10 CFR 2.335 imposes a responsibility to justify a waiver that is the natural effect of any agency rule prohibiting a challenge to its regulations in hearings. The NRC has discretion to transact its business broadly, through rulemaking, or case-by-case, through adjudication. When the NRC engages in rulemaking, the NRC is resolving issues generically, rather than in adjudication. NRC rules, like those of other agencies, represent the product of substantial specialized analysis and resource commitment in often lengthy rulemaking proceedings. Where an agency has chosen to proceed generically through rulemaking, it is not obliged to continually litigate and re-litigate those issues. No changes were made to the GEIS or Rule as a result of these comments.

(473-18-1) (473-13-11)

D.2.4.8 – COMMENT: Some commenters questioned a statement in Section 1.6.3.1 of the draft GEIS where the NRC stated that it cannot revoke existing licenses without the existence of a threat to public health and safety or the common defense and security. The commenters asserted that "we" (which the NRC interprets in the context to mean the American people, and not the NRC) can implement a policy change with respect to nuclear power and shut down existing nuclear power plants. One commenter noted that the NRC does have the authority to revoke a license if a plant is found to be unsafe, regardless of a licensee's vested interest in the facility.

RESPONSE: The NRC agrees with the comments. Under the AEA and the Energy Reorganization Act of 1974 the NRC has broad authority to grant, suspend, revoke, or amend licenses for utilization facilities (e.g., nuclear power reactors) and to grant, suspend, revoke, or amend materials licenses, including licenses to store spent fuel at ISFSIs based on the NRC's consideration of, among other factors, public health and safety.

In addition, the NRC notes that the agency was created and is overseen by Congress and the President. Should Congress and the President determine that the best interests of the United States would be served by a change in nuclear energy policy, Congress and the President have the authority to change that policy in any direction they believe appropriate, limited only by the Constitution.

As a result of these comments, the discussion in Section 1.6.2.1 has been revised to state more clearly the NRC's authority to act on the basis of public health and safety (or common defense and security) considerations. No changes were made to the Rule as a result of these comments.

(836-70) (930-2-23)

D.2.5 Comments Concerning the NEPA Process

D.2.5.1 – COMMENT: One commenter asserted that the GEIS considers and announces a new national program—including options and alternatives—for the storage and disposition of spent fuel. The commenter then asserted that the NRC must prepare a programmatic EIS to address this new program. The commenter further asserted that the GEIS is designed to address issues generic to storage and disposal of spent fuel.

RESPONSE: The NRC disagrees with the comment. The GEIS considers the environmental impacts of continued spent fuel storage and alternatives to the issuance of a new Rule. The GEIS does not announce any new program or policy. Rather, it provides the analysis to satisfy a portion of the NRC's obligations in licensing proceedings. The NRC's approach to the environmental impacts of continued storage has been largely similar since 1984, and this generic approach was affirmed by the Court in the 2012 decision that vacated and remanded the 2010 Waste Confidence update (NRC 2010a). Further, the GEIS and Rule do not modify the national policy that calls for disposal of spent fuel in a deep geologic repository. No changes were made to the GEIS or Rule as a result of this comment.

(496-13)

D.2.5.2 – COMMENT: Two commenters asserted that it is inappropriate for NRC to describe nuclear waste management as "a small piece of the puzzle." Over time, the commenters assert that nuclear waste management will become the most expensive aspect of nuclear power.

RESPONSE: The NRC agrees with the comments in part and disagrees with the comments in part. The NRC agrees that nuclear waste management is a significant issue that is more than a small piece of the puzzle. However, the comments misconstrue the NRC's action in this proceeding. The GEIS and Rule address continued storage of spent fuel, rather than all forms of nuclear waste management. Further, the GEIS and Rule have a limited effect in future licensing proceedings: they satisfy the NRC's NEPA obligations to analyze the environmental impacts of continued storage. Other matters to be considered in any given licensing proceeding will be addressed outside of the GEIS and Rule. No changes were made to the GEIS or Rule as a result of these comments.

(616-5) (709-5) (856-5)

D.2.5.3 – COMMENT: The commenter asserted that the NRC would adopt “small” conclusions in site-specific licensing environmental reviews. The commenter also expressed concern that the NRC would not consider alternative ways to store spent fuel or alternative durations for spent fuel storage.

RESPONSE: The NRC disagrees with the comment. The GEIS includes some impact determinations that are greater than SMALL. These determinations will be included within the decision-making process for environmental reviews during site-specific licensing. Site-specific licensing will govern the manner and duration of spent fuel storage, including potential mitigation of storage impacts, during the licensed life of the facility. The duration of the license and any renewals will be appropriate to the facility under the applicable NRC regulations. No site-specific licensing will result in indefinite spent fuel storage. Moreover, the NRC requires new safety and environmental reviews for each new or renewed license application. No changes were made to the GEIS or Rule as a result of this comment.

(473-6-2)

D.2.5.4 – COMMENT: One commenter asserted that the NRC must show that site-specific evaluations of environmental impacts would not result in results different from those in the GEIS, but the NRC failed to do so. The commenter asserted that the GEIS “assumes away” the differences between sites rather than demonstrating that differences between sites are either captured in the GEIS or are not sufficiently different to warrant separate treatment. The commenter also asserted that the GEIS does not indicate how different storage scenarios can be considered at different sites in later reviews.

RESPONSE: The NRC disagrees with the comments. In developing the GEIS, the NRC considered site-specific characteristics at existing reactor and ISFSI sites to determine whether the environmental impacts could be generically resolved for each resource area. As part of this analysis, the NRC considered whether site-specific factors could result in different impact levels at different sites. In several resource areas in the long-term and indefinite storage timeframes, the NRC acknowledged that future site-specific factors could result in varying impact levels, thus, the GEIS assigns a range of impacts to address the uncertainty.

Regarding storage scenarios, the GEIS considers three storage timelines for both onsite and away-from-reactor storage. The first two timeframes, both the short-term (up to 60 years after licensed reactor life) and long-term (up to 160 years after licensed reactor life) timeframes, assume that spent fuel will go to a repository during or at the conclusion of those timeframes. The third timeframe, indefinite storage, assumes that a repository may never become available. The short-term timeframe, moreover, addresses the impacts of continued storage in both spent fuel pools and dry casks, while the long-term and indefinite storage timeframes rely on storage in dry casks. No changes were made to the GEIS or Rule as a result of these comments.

(473-12-1) (473-12-3) (473-12-4)

D.2.5.5 – COMMENT: One commenter asserted that a GEIS is not compatible with NEPA. Another commenter asserted that the decision to conduct a GEIS does not comply with NEPA because a GEIS cannot address site-specific differences.

RESPONSE: The NRC disagrees with the comments. Under, NEPA, agencies are permitted to develop generic environmental review documents when appropriate. In developing the GEIS, the NRC considered site characteristics at existing reactor and ISFSI sites. In evaluating environmental impacts, the NRC considered whether site-specific factors could result in different impact levels at different sites. In a few resource areas in the long-term and indefinite storage timeframes, the NRC acknowledged that future site-specific factors could result in varying impact levels, so the NRC assigned a range of impacts to address the uncertainty. No changes were made to the GEIS or Rule as a result of these comments.

(447-2-8) (611-16)

D.2.5.6 – COMMENT: One commenter expressed a concern that the NRC's actions will foreclose future NEPA challenges related to generation, storage, or disposal of spent fuel based on the analysis in the GEIS.

RESPONSE: The NRC disagrees with the comment. As required under NEPA and the APA, the NRC has provided an opportunity for the members of the public to review and provide comments on the draft GEIS and proposed Rule. In addition, the GEIS and Rule address the environmental impacts of continued storage only. The GEIS and Rule do not address the environmental impacts of spent fuel generation, storage during a reactor's licensed life for operations, or disposal. Those impacts are addressed in other proceedings, including site-specific reactor licensing proceedings. Moreover, these reviews will take into account the conclusions from the GEIS as codified in 10 CFR 51.23. In addition, the NRC's regulations at 10 CFR 2.335 allow participants in NRC proceedings to request that a rule, including 10 CFR 51.23, not be applied, or be waived, in a particular proceeding because special circumstances are present that would prevent the application of the rule from satisfying the purpose of the rule. For more information on waivers, see discussion in Section D.2.4.7 of this appendix. No changes were made to the GEIS or Rule as a result of this comment.

(919-1-4)

D.2.5.7 – COMMENT: Several commenters asserted that the NRC impermissibly relied on an ongoing proceeding (e.g., the "Rulemaking Revising Security Requirements for Facilities Storing SNF and HLW [high-level waste]") in the GEIS. Commenters asserted that relying on a proceeding that is not yet final violates Council on Environmental Quality (CEQ) guidance on developing timely and efficient NEPA reviews. The commenters also submitted comments on the NRC's proposed Rule to update the security requirements for facilities storing spent fuel and HLW (74 FR 66589).

RESPONSE: The NRC disagrees with the comments. The GEIS is a stand-alone document that relies upon multiple sources of information, all of which are cited in the references at the end of each chapter. The pendency of any other rulemaking is not a factor in the completeness of the GEIS itself.

The rulemaking described by the comments, "Draft Technical Basis for Rulemaking Revising Security Requirements for Facilities Storing SNF and HLW," (74 FR 66589), is cited in Section 1.6.2.2 of the GEIS as an example of an ongoing rulemaking that could result in additional regulatory requirements that cannot be imposed by the current rulemaking to revise the Rule. The GEIS merely notes, for informational purposes, that the NRC is undertaking this rulemaking effort and provides a reference to a *Federal Register* Notice that describes this effort. The revised security requirements rulemaking is therefore unrelated to impact determinations in the GEIS, and the instant rulemaking need not await its completion. Moreover, the NRC has not used the ongoing nature of any other rulemaking to avoid analyzing environmental impacts in the GEIS, which provides a comprehensive analysis of the environmental impacts of continued storage. To the extent that the comments discuss the substance of another rulemaking, the comments are not within the scope of this proceeding. No changes were made to the GEIS or Rule as a result of these comments.

(1-19) (1-20) (473-11-12)

D.2.5.8 – COMMENT: Commenters asserted that the NRC should review health and environmental effects of spent fuel storage on an ongoing basis. These commenters expressed concern that the GEIS is a snapshot of environmental impacts and, thus, cannot capture future findings or the changing nature of radioactive materials.

RESPONSE: The NRC disagrees with these comments. NEPA only requires Federal agencies to consider the reasonably foreseeable environmental impacts based on currently available information at the time of the decision. NEPA reviews are necessarily based on current information so that the results of environmental reviews can inform agency decisions. NEPA does not obligate Federal agencies to update environmental reviews past the point of implementing the proposed action. Nonetheless, the NRC has accumulated substantial practical operating experience with proven storage methodologies of wet and dry storage resulting from decades of licensed storage and regulatory oversight under the current regulatory framework. This experience provides a sound and reliable technical basis for predicting spent fuel performance in spent fuel pools and ISFSIs as reflected in the GEIS. Beyond the preparation of the GEIS and codification in the Rule, the NRC will continue to review health and environmental effects of spent fuel storage as part of its ongoing licensing, oversight, and research activities. Any new information, such as the performance of spent fuel during lengthy periods of time, will be used to update and improve the NRC's regulatory requirements as appropriate. No changes were made to the GEIS or Rule as a result of these comments.

(47-5) (708-6)

D.2.5.9 – COMMENT: One commenter asked when the GEIS would be updated and stated that a document published in 2014 should not be the final word on environmental impacts into the distant future. The commenter suggested that the GEIS should include a discussion regarding the NRC's plans for its updating.

RESPONSE: The NRC agrees with this comment. The NRC will review the GEIS and Rule for possible revision when warranted by significant events that may call into question the appropriateness of the Rule. No changes were made to the GEIS or Rule as a result of this comment.

(619-1-8)

D.2.5.10 – COMMENT: Several commenters challenged statements made in the NRC's Scoping Process Summary Report for the GEIS. The commenters expressed concerns that the NRC's response to scoping comments suggested that the NRC would publish a deficient GEIS. One commenter urged the Commission to take action to correct the asserted deficiencies and proposes a schedule by which the Commission could conduct a formal adjudicatory process; the same commenter asserts that the NRC must take action to mitigate impacts that may occur "forever," and that the NRC failed to provide an adequate basis for rejecting comments. One commenter asserted that the NRC ignored its scoping comments. Another commenter expressed concerns that it did not receive an opportunity to respond to the Scoping Process Summary Report.

RESPONSE: The NRC disagrees with the comments. The scoping for the GEIS performed by the NRC complies with the scoping regulations in 10 CFR 51.28 – 51.29. The "Waste Confidence Generic Environmental Impact Statement Scoping Process Summary Report" (NRC 2013j) provides the scoping determinations and conclusions made by the NRC. The Report also summarizes comments received during the public scoping period and provides the NRC's responses. A separate document, *Scoping Comments on the Waste Confidence Generic Environmental Impact Statement*, lists the scoping comments organized by comment category (NRC 2013k). The NRC considered all scoping comments and responded to them in the Scoping Summary Report. As a practical matter, most of the scoping disagreement centers on a basic misunderstanding by commenters of the nature of the proposed action. Here, the NRC is preparing a GEIS to analyze continued storage impacts and then codifying the GEIS results by adoption of a revised Rule rather than licensing nuclear power reactors, as commenters claim. It is the licensing process, not this rulemaking, through which alternatives to a licensed facility and mitigation of construction and operational impacts at a proposed facility are considered. The comment period following issuance of the draft GEIS has provided the public an additional opportunity to comment on scoping, and no further review, including an NRC adjudicatory hearing, is warranted or otherwise available under Part 51 procedures. No changes were made to the GEIS or Rule as a result of these comments.

(1-1) (1-31) (1-9) (174-7) (473-7-1) (783-1-4)

D.2.5.11 – COMMENT: Two commenters asserted that the GEIS supported the 2010 Waste Confidence update (NRC 2010a) that the Court of Appeals vacated and remanded in 2012. One commenter further claimed that the GEIS is of poor quality, and that future legal challenges will occur as a result.

RESPONSE: The NRC disagrees with the comments. The NRC's 2010 Waste Confidence update (NRC 2010a) contained an EA that reached a FONSI. It did not rely upon a GEIS. In September 2012, the Commission determined (NRC 2012a) that the NRC would develop a new rule supported by a GEIS in response to the Court of Appeals' June 2012 decision that vacated and remanded the 2010 Waste Confidence update (*New York v. NRC*). Regarding the quality of the GEIS, the NRC has worked to ensure that the GEIS meets all applicable requirements. No changes were made to the GEIS or Rule as a result of these comments.

(47-1) (603-14)

D.2.5.12 – COMMENT: A commenter asserted that the NRC failed to comply with its own regulations that require it to use plain language in EISs by citing to a vacated *Federal Register* Notice. The commenter asserts that the NRC Inspector General has faulted the NRC for this practice and asserts that the GEIS should provide as much information as possible for its sources.

RESPONSE: The NRC disagrees with the comment. While the NRC has no "plain-language" regulations, the NRC strives to publish documents in plain, easily understood English. Also, the GEIS index allows rapid searching of the text, and the NRC posted all draft GEIS reference materials to the NRC's public website for easy access during the public comment period. No changes were made to the GEIS or Rule as a result of these comments.

(473-17-8) (473-17-9)

D.2.5.13 – COMMENT: One commenter asserted that the GEIS should contain a discussion of the impacts if the NRC decides not to proceed with the rulemaking.

RESPONSE: The NRC agrees with the comment. In its discussion of the "no-action" alternative, the GEIS addresses the impacts that would occur if the rulemaking does not proceed. The no-action alternative may result in the NRC's pursuing one of several options to address the environmental impacts of continued storage. These options include a site-specific review option, a GEIS-only option, and a policy-statement option. The NRC discusses the no-action alternative—and the various options in the case of no action—in Section 1.6.1 of the GEIS, and it considers the costs and benefits of the proposed action and NRC's potential options in the case of no action in Chapter 7 of the GEIS. The NRC notes in Section 1.6.3, however, that neither the proposed action nor the NRC's potential options in the case of no action have significant environmental impacts because all of them are different administrative

approaches for addressing the environmental impacts of continued storage in NRC licensing processes. No changes were made to the GEIS or Rule as a result of this comment.

(244-4-2)

D.2.5.14 – COMMENT: Two commenters noted that NEPA is a procedural statute.

RESPONSE: The NRC agrees with the comments. No changes were made to the GEIS or Rule as a result of these comments.

(45-2-3) (45-2-6)

D.2.5.15 – COMMENT: Several commenters stated that the GEIS is premature or expressed concerns that the NRC should conduct additional research, gather updated information, or simply include other information sources in the GEIS. One commenter stated that the majority of references within the draft GEIS are NRC evaluations and assessments, in contrast to technical studies. This commenter also asserted that references were submitted with their scoping comments, but were not used in the draft GEIS. One commenter stated that NEPA does not require that an agency delay action until better or other information becomes available.

RESPONSE: The NRC agrees in part and disagrees in part with the comments. The NRC agrees with the comment that asserts that an agency need not delay action until additional information becomes available. In a recent case reviewing the licensing of a nuclear power plant, a Court of Appeals held there was no need to delay an action because currently unavailable information might come to light in the future, *Massachusetts v. NRC*.

The NRC disagrees with the comments that assert that the GEIS is premature, that it must wait for new information or additional studies, or that it must incorporate studies that have not yet been completed.

NEPA only requires that Federal agencies use currently available information at the time of decision-making. Further, regarding information sources relied upon in the GEIS, NEPA guides agencies to employ technical knowledge and expertise to undertake a reasoned and accurate analysis of the available information. In developing the GEIS, NRC scientists and engineers reviewed available information and relied upon those materials that the NRC found to be high-quality and reliable.

For an example of a response in which the NRC evaluates an information source identified in comments, but not relied upon in the GEIS, see Section D.2.39.26 of this appendix. No changes were made to the GEIS or Rule as a result of these comments.

(30-3-6) (112-3-1) (144-1) (192-13) (192-4) (192-7) (192-8) (693-2-3) (711-3) (897-2-19)

D.2.5.16 – COMMENT: One commenter claimed that the NRC did an inadequate and legally insufficient analysis of the environmental impacts of spent fuel storage. The commenter asserted that the NRC started its analysis by assuming licensing instead of conducting an analysis that the decisionmaker could use to decide whether a facility should be licensed in the first place, before any waste is produced.

RESPONSE: The NRC disagrees with this comment. The purpose of this GEIS was to evaluate the impacts of continued storage. In so doing, the NRC did not assume licensing, but restricted its analysis to the impacts from continued storage that could result if a license were granted. The decision to issue a license will be made in future licensing proceedings. The NRC's licensing processes will continue to include environmental reviews of specific sites to help the decisionmaker determine whether licenses should be issued for facilities. Site-specific reviews will rely on the codified results of the GEIS to address the environmental impacts of continued storage. No changes were made to the GEIS or Rule as a result of this comment.

(30-2-2)

D.2.5.17 – COMMENT: A commenter expressed concern about whether the NRC would respond to public comments on the GEIS.

RESPONSE: As a factual matter, the NRC responds to all public comments received on the draft GEIS. No changes were made to the GEIS or Rule as a result of this comment.

(284-15)

D.2.5.18 – COMMENT: One commenter asserted that NEPA is the basis for the GEIS and then provided a series of summaries or quotes from, and citations to NEPA cases from the Supreme Court and the U.S. Courts of Appeals for the 8th and 9th Circuits. The commenter also cited to a NEPA-implementation regulation promulgated by the CEQ.

RESPONSE: The NRC agrees with the comment insofar as the NRC prepared the GEIS pursuant to NEPA. The NRC neither agrees nor disagrees with the comment insofar as it summarizes, quotes from, or cites to NEPA-related cases or regulations. No changes were made to the GEIS or Rule as a result of this comment.

(688-4)

D.2.5.19 – COMMENT: A commenter asserted that the NRC has used and continues to use rulemaking procedures and generic treatment to place matters beyond NEPA reviews and to block public participation.

RESPONSE: The NRC disagrees with the comment. The NRC's efforts to address some environmental issues generically or through rulemaking comply with NRC's NEPA-implementation regulations, which are consistent with the CEQ's NEPA-implementation regulations. Regarding public participation, for this proceeding, the NRC has considered all comments it received by January 17, 2014 (although the comment period formally closed on December 20, 2013), and the NRC specifically invited and welcomed members of the public and a wide range of stakeholders, groups, governments, and other parties to participate in multiple stages of this rulemaking. No changes were made to the GEIS or Rule as a result of this comment.

(813-1)

D.2.5.20 – COMMENT: Several commenters stated that the GEIS is inadequate because it fails to take a hard look at environmental impacts or fails to make information available to the public and decisionmakers. Another commenter stated that NRC has not conducted a thorough environmental analysis of repository siting or lengthy onsite storage. One commenter expressed concern that the analysis in the GEIS failed to take a hard look by limiting its generic analysis to only 60 years; the commenter asserted that NRC must explain why a 60-year timeframe is reasonable for analysis, or expand the timeframe to a period that reasonably reflects the availability of permanent waste storage. One commenter asserted that the NRC failed to take a hard look at impacts at U.S. reactor sites. Finally, one commenter noted that the NRC's NEPA review is subject to a "rule of reason," and so it need not consider remote-and-speculative impacts or worst-case scenarios.

RESPONSE: The NRC agrees in part and disagrees in part with these comments. The NRC agrees with comments that NRC's NEPA reviews are subject to a "rule of reason" and need not consider worst-case or remote-and-speculative scenarios.

The NRC disagrees with the comments that the NRC has failed to take a hard look at environmental impacts of continued storage. The NRC has carefully complied with its NEPA-implementation regulations and the case law governing EIS preparation in the course of developing the GEIS. Further, the NRC provided complete public access to information related to the draft GEIS and Rule by posting all draft GEIS references on the NRC's public website during and prior to the public comment period, by conducting multiple public meetings throughout the United States, by conducting periodic status update teleconferences, and by disseminating information through an e-mail listserve. Those comments asserting that the NRC should have considered siting a geologic repository are beyond the scope of this proceeding because continued storage (i.e., the period after a reactor's licensed life, but before spent fuel is shipped to a repository) does not include repository-based disposal activities. The NRC will address impacts from such activities during the site-specific licensing process for a repository. Regarding the duration of onsite storage in the three timeframes considered in the GEIS, the NRC has framed its analysis in terms of environmental impacts that would result from continued

storage over a short-term period (up to 60 years after licensed life), long-term period (up to 160 years after licensed life), and an indefinite period, because those timeframes correspond to reasonable alternative times when a repository might become available. Therefore, the NRC has not limited its analysis to 60 years or failed to consider lengthy onsite storage. In addition, the NRC disagrees with comments that indicate that it failed to take a hard look at storage impacts at U.S. reactor sites; in fact, the NRC's assessment of potential impacts is based on experience with reactor sites throughout the United States. No changes were made to the GEIS or Rule as a result of these comments.

(30-3-5) (30-7-8) (192-11) (324-1) (432-1) (465-1) (558-2) (611-50) (827-1-4) (897-1-14) (897-3-17) (897-1-6)

D.2.5.21 – COMMENT: A commenter referred to the 2003 CEQ NEPA Task Force Report on Modernizing NEPA Implementation (CEQ 2003). The commenter recommended that the NRC consider incorporating adaptive management and monitoring strategies for each of the storage timeframes.

RESPONSE: The NRC disagrees with the comment. In general, adaptive management and monitoring programs in the NEPA context are most appropriately applied when an agency directly manages natural resources. Resource-management agencies can monitor the environmental effects of the actions they take on the resources they manage, and then modify management approaches to reach their desired aims if existing practices do not yield the results an agency sought or assumed at the time it conducted its NEPA analysis. Licensing agencies, like the NRC, however, are typically less able to take advantage of adaptive management approaches because doing so would require the NRC to exercise additional oversight over licensees or introduce new license requirements, conditions, or inspections, any of which may exceed NRC's regulatory authority. Nonetheless, aspects of NRC's existing oversight and regulatory processes are inherently adaptive insofar as the NRC's regulations often make use of performance standards that give licensees the flexibility to decide how they will meet the standard. Finally, the NRC's ongoing activities to protect public health and the environment also include a robust research program that regularly provides new information to NRC's regulatory mission. No changes were made to the GEIS or Rule as a result of this comment.

(328-12-7)

D.2.5.22 – COMMENT: A commenter quoted portions of a 2013 report from the NRC Office of the Inspector General, which concluded, in pertinent part, that NRC's NEPA documents are lengthy or complex and do not clearly present important NEPA information. The commenter also quoted a finding that suggests that the NRC should present NEPA information in a format that allows people to readily understand how an action may affect them. The commenter then argued that the GEIS embodies the same failures.

RESPONSE: The NRC disagrees with the comment. As explained in Section D.2.4.4 of this appendix, the NRC has determined that the format for its analysis of what has been traditionally known as its Waste Confidence Decision should be changed to the more familiar and better understood format of an EIS. This change to the more recognizable EIS format will enhance public understanding of the GEIS. Also, consistent with the Office of the Inspector General's recommendations, the GEIS contains a brief executive summary in a readily accessible, question-and-answer format that explains key elements of the GEIS to the interested public while minimizing complexity. This summary explains how continued storage will affect people and the environment. The GEIS also contains an index, consistent with the Office of the Inspector General's findings, to help interested parties find specific information in the GEIS. No changes were made to the GEIS or Rule as a result of this comment.

(473-9-10)

D.2.5.23 – COMMENT: Commenters expressed concerns regarding risk assessment in the GEIS. One commenter stated that it may be inappropriate to assess spent fuel hazards over a span of decades in an EIS. Another commenter stated that the GEIS framework may not be adequate or appropriate for nuclear risk assessment.

RESPONSE: The NRC disagrees with the comments. Insofar as the GEIS contains risk-related information, it does so in an effort to understand, address, and explain the potential environmental impacts of events that, in many cases, have very low probabilities of occurring, yet have high potential consequences. In this regard, risk information is an important element of providing an accurate picture of environmental impacts in the GEIS. To the extent that the document relies on risk information, it is information that the NRC has developed as part of the NRC's ongoing licensing, oversight, and research activities. No changes were made to the GEIS or Rule as a result of these comments.

(431-1) (464-1)

D.2.5.24 – COMMENT: One commenter asserted that the GEIS fails to consider the worst-case scenario at Indian Point and therefore, the GEIS cannot be relied upon as comprehensive.

RESPONSE: The NRC disagrees with the comment. NEPA does not require agencies to consider worst-case scenarios. Instead, NEPA requires agencies to address the reasonably foreseeable impacts of their actions, which the NRC has done in the GEIS. No changes were made to the GEIS or Rule as a result of this comment.

(611-18)

D.2.5.25 – COMMENT: Commenters criticized the NRC's impact determination terminology (small, moderate, and large impact levels) as inappropriate or failing to comply with NEPA because those terms are vague and do not quantify the impacts. One commenter stated that

there could be no “small” or “moderate” dangers because nuclear waste is highly dangerous and suggested that NRC delete this terminology. The commenters also questioned how the majority of impacts could be SMALL for the short-term and long-term timeframes when information presented by commenters indicates that there are large environmental impacts at a specific nuclear power plant.

RESPONSE: The NRC disagrees with the comments. To guide its assessment of environmental impacts for a proposed action or alternative actions, the NRC established standards of significance for environmental impacts using the CEQ terminology for “significantly” (see 40 CFR 1508.27). Using this approach, the NRC established three levels of significance for potential impacts—SMALL, MODERATE, and LARGE—that provide a common framework for each of the resource areas assessed in this GEIS. The NRC has relied on these impact levels to evaluate impact significance in other environmental rulemakings, such as the generic evaluation of license renewal impacts for operating reactors in 10 CFR Part 51, Appendix B, Table B-1. These significance levels provide a comparison tool that allows decisionmakers and interested parties to grasp the relative significance of various environmental impacts. Each impact level assigned in the GEIS is supported by substantial NRC analysis. Contrary to one comment, the GEIS addresses impacts to various environmental resources rather than assigning a single level of significance to nuclear waste. Finally, the NRC has evaluated available information for all existing sites, including information presented by comments, in reaching its impact conclusions. No changes were made to the GEIS or Rule as a result of these comments.

(20-1) (473-10-4) (473-10-5) (473-10-6) (473-10-7) (706-3-17) (762-2)

D.2.5.26 – COMMENT: A commenter noted that the NRC had not identified any cooperating agencies and that no agencies had requested to cooperate on the GEIS. The commenter asserted that the DOE should have been involved in the GEIS as a cooperating agency as a result of its role in developing a repository for HLW, its role in managing nuclear waste facilities and sites, and its activities in identifying data gaps related to spent fuel storage and transportation.

RESPONSE: The NRC agrees in part and disagrees in part with the comment. As the comment noted, the NRC did not identify potential cooperating agencies, and no agencies—including DOE—requested to participate as a cooperating agency in developing the GEIS. Furthermore, NEPA does not require the NRC to involve agencies that do not wish to participate. The data gaps identified by DOE are known to the NRC; in fact, DOE’s identification of data gaps is based in part on NRC-developed information. No changes were made to the GEIS or Rule as a result of this comment.

(693-2-2)

D.2.5.27 – COMMENT: Two commenters expressed concerns about NEPA segmentation. One commenter asserted that NRC failed to consider relationships among spent fuel storage and reactor licensing actions, that the NRC divided actions into arbitrary time periods, that the NRC illogically separated continued storage impacts from disposal impacts, and that the NRC has improperly tiered from existing information sources. Another commenter asserted that the NRC's reliance on future licensing actions to approve a dry transfer system provides inadequate information.

RESPONSE: The NRC disagrees with the comments. The NRC recognizes that continued storage of spent fuel is an integral part of reactor licensing. In particular, the NRC acknowledges the holding in *New York v. NRC*, that the NRC's application of its generic environmental analysis and the Rule constitutes a stage in reactor licensing. However, the Court did not find that NRC's environmental review of continued storage impacts in that stage constitutes improper tiering or segmentation under NEPA. Also, the Court did not require the NRC to consider the environmental impacts of ultimate disposal in that framework.

The timeframes for analyzing continuing storage impacts (Section 1.8.2 of the GEIS) were not selected arbitrarily. Rather, the three timeframes reflect short-term storage, long-term storage, and indefinite storage scenarios that reasonably represent the periods over which continued storage impacts might occur, depending on the availability of a permanent repository. The 60-year duration of the short-term timeframe is based on two factors. First, the NRC decommissioning regulations—10 CFR 50.82 and 52.110—require that reactor decommissioning be accomplished within 60 years after cessation of licensed operations. Second, in Section 1.2 and Appendix B.2.2 of the GEIS, the NRC has determined that it is feasible to have a mined geologic repository available within 60 years after the licensed operating life of a nuclear power plant, based in part on DOE's stated intention to provide repository capacity by 2048. The long-term timeframe, which the NRC views as a less likely outcome, provides a sensitivity case that demonstrates the impacts of storage for an additional 100 years, if a repository is not available. Both the short-term and long-term timeframes end when spent fuel is disposed of in a repository, which is consistent with national policy. The NRC has determined that the indefinite storage timeframe is the least likely scenario, but has been included the indefinite timeframe to meet the agency's obligations to consider any impact whose occurrence is not "...so remote and speculative as to reduce the effective probability of its occurrence to zero," thus complying with the remand in *New York v. NRC*.

Although the NRC has not licensed a dry transfer system (DTS), the design, construction and operation of a DTS is well understood based on current engineering concepts as discussed in Section 2.1.4 of the GEIS. Proposed facilities known to the NRC thus provide a reasonable basis for predicting the reasonably foreseeable environmental impacts likely to result from construction and operation of a DTS facility. In addition, any proposed DTS facility would be subject to then-current licensing requirements based on accumulated knowledge and

experience from other licensing actions. No changes were made to the GEIS or Rule as a result of these comments.

(473-12-19) (897-7-16) (897-7-17) (897-7-7)

D.2.5.28 – COMMENT: Some commenters indicated that NEPA requires consideration of all reasonably foreseeable impacts, and that a reactor licensing decision requires a determination about whether power generation is worth the costs, risks, and impacts. The commenters asserted that the NRC, in the GEIS, assumed that licensing would take place, and the NRC then provided inadequate information about the environmental impacts of spent fuel storage. The commenters also asserted that the NRC fails to provide enough information to determine whether to license a reactor.

RESPONSE: The NRC agrees that NEPA requires consideration of reasonably foreseeable impacts in the context of licensing decisions, but the NRC disagrees with the assertions that the GEIS must address all impacts and provide enough information to make a licensing decision. It is important to note that this GEIS satisfies a portion of the NRC's NEPA obligations related to the issuance of a reactor or spent fuel storage facility license by generically evaluating the environmental impacts of continued storage. Prior to the completion of an individual licensing action, the NRC will conduct a site-specific environmental review and consider reasonably foreseeable impacts to inform a decision as to whether the costs, risks, and impacts support a licensing decision according to applicable NRC regulations. No changes were made to the GEIS or Rule as a result of these comments.

(34-1) (897-3-12)

D.2.5.29 – COMMENT: One commenter asserted that the NRC must consider expedited transfer of spent fuel from spent fuel pools to dry casks as a mitigation measure or an alternative in the GEIS. The commenter asserted that doing so would be superior to using another process, such as backfit, to determine whether to require expedited transfer so it can be assessed for all plants. The commenter also asserted that NRC should expressly explain any reliance on the "Spent Fuel Pool Study" (SECY-13-0112, NRC 2013l) and that a supplemental draft GEIS would be required if NRC wished to incorporate the conclusions from the study.

RESPONSE: The NRC disagrees with the comments. The NRC is not considering new regulatory requirements in the GEIS (see Section 1.6.2.2 of the GEIS). The issue of expediting transfer of spent fuel from spent fuel pools to dry casks has been separately considered by the Commission in another proceeding (see SRM-COMSECY-13-0030, "Staff Requirements – COMSECY-13-0030 – Staff Evaluation and Recommendation for Japan Lessons-Learned Tier 3 Issue on Expedited Transfer of Spent Fuel" [NRC 2014a]), and it will not be considered in this proceeding. Regarding SECY-13-0112 (NRC 2013l), the NRC has reviewed it and determined that it does not change any conclusions in the GEIS. The NRC now includes SECY-13-0112

(NRC 2013l) as a reference in the GEIS. Because the document is consistent with the NRC's existing analysis and conclusions, the NRC does not consider the inclusion of this reference to be a significant change. No changes were made to the GEIS or Rule as a result of these comments.

(473-11-15) (473-11-16)

D.2.5.30 – COMMENT: One commenter expressed support for the notion that the NRC would prepare site-specific environmental analyses prior to future licensing actions.

RESPONSE: The NRC neither agrees nor disagrees with the comment, which is an expression of support. No changes were made to the GEIS or Rule as a result of this comment.

(579-7)

D.2.5.31 – COMMENT: A commenter stated that the NRC claimed in its 1984 Waste Confidence Decision that permanent nuclear waste disposal was technically feasible, which enabled the NRC to license and renew reactor licenses without considering public concerns about the effects of "extended" waste storage. The commenter also provided license renewal and expiration dates for reactors in Wisconsin.

RESPONSE: The NRC agrees in part and disagrees in part with the comment. The NRC agrees that the 1984 Waste Confidence Decision (49 FR 34688) and subsequent updates, like this rulemaking, have found that disposal of spent fuel is technically feasible. The NRC disagrees, however, that these issuances have not considered public concerns about the effects of "extended" storage. Each time the NRC issued a new or updated Rule—including in 1984—it has provided an opportunity for the public to express concerns in the form of public comments. The NRC has considered and responded to all public comments received in these proceedings, including those comments concerned with "extended" storage. The NRC agrees that the operating and licensing dates for the named reactors are correct. No changes were made to the GEIS or Rule as a result of this comment.

(707-1)

D.2.5.32 – COMMENT: One commenter asserted that the NRC must update the information it considered in NUREG–0575, published in 1979 (NRC 1979), and provide a similar scope of review to NUREG–0575 in the current GEIS.

RESPONSE: The NRC disagrees with the comments. The current rulemaking proceeding and its predecessors have addressed the environmental impacts of continued storage. NUREG–0575 (NRC 1979) was a broader, programmatic analysis of spent fuel storage, both during and after operations, that informed NRC decisions on spent fuel storage throughout the 1980s, when

many spent fuel storage programs, including dry cask storage, were first under consideration for widespread application in the United States. No changes were made to the GEIS or Rule as a result of these comments.

(473-9-11) (473-9-2) (473-10-3)

D.2.5.33 – COMMENT: One commenter raised procedural and substantive concerns about the NRC's licensing review process for the Private Fuel Storage Facility.

RESPONSE: The NRC disagrees with the comment because it raises issues that were resolved in the course of the Private Fuel Storage licensing proceeding, and NEPA does not require the NRC to revisit a past action, even when similar issues are being considered in a later action. No changes were made to the GEIS or Rule as a result of this comment.

(579-12)

D.2.5.34 – COMMENT: Three commenters offered their own interpretations of *New York v. NRC*. One commenter asserted that the NRC must examine what would happen if spent fuel remained unprotected at reactor sites indefinitely. Another commenter asserted that the Court of Appeals held that spent fuel pools and temporary storage casks currently in use pose an undue risk to public health and safety. A third commenter argued that the Court of Appeals found that the NRC should not allow the creation of more waste unless it can guarantee that the waste will be taken care of or demonstrate that the environmental impacts of waste storage will not be significant.

RESPONSE: The NRC disagrees with these comments. The Court of Appeals in *New York v. NRC* vacated the 2010 Waste Confidence update (75 FR 81037). While the Court of Appeals endorsed the NRC's generic approach to making environmental findings in support of the Rule, it required the NRC to provide additional analysis in three specific areas to support its finding that there would be no significant impacts from the continued storage of spent fuel after a reactor's licensed life for operations. In particular, the Court of Appeals identified three defects in the NRC's analysis: the impacts from spent fuel pool leaks and spent fuel pool fires, and the possibility that a repository would never become available.

The Court of Appeals' opinion did not include any finding that spent fuel pools or dry casks are unsafe, and it did not require the NRC to assess the impacts of leaving fuel unprotected. Nor did the Court of Appeals find the 2010 Waste Confidence update (75 FR 81037) deficient in any area other than those specifically identified above. By directing the NRC to prepare a generic environmental impact analysis of the impacts of continued storage, the Commission has, however, exercised its discretion to perform a comprehensive environmental analysis that encompasses more than the three specific considerations identified by the Court of Appeals. No changes were made to the GEIS or Rule as a result of these comments.

(244-3-2) (246-2-3) (620-6)

D.2.5.35 – COMMENT: Several commenters questioned how the revised Rule would affect plants that have already been licensed. Commenters were specifically concerned with plants that were licensed or issued renewed licenses based on the 2010 Waste Confidence update (75 FR 81037). Another commenter argued that existing licenses and renewed licenses that relied on the 1990 (55 FR 38474) and 2010 (75 FR 81032) Waste Confidence Rules should be revoked. The commenter asserted that the licenses and license renewals dependent upon the 2010 Rule are based on a condition that would warrant the Commission to refuse to grant a license on an original application, and they should therefore be revoked. Further, the commenter argued that the 1990 Waste Confidence Decision predicted that a repository would be available by 2025, which is now impossible. Therefore, the commenter argued that the licenses and license renewals were issued based on a false premise and should be revoked for violating 42 USC Section 2133(d) and 10 CFR 50.57(a)(3).

RESPONSE: The NRC disagrees with these comments. NEPA requires that the NRC provide a reasonable estimate, based on the information available at the time of decision, of the reasonably foreseeable impacts of the NRC's proposed action. NEPA does not require the NRC to revoke existing licenses simply because reasonable predictions in the agency's environmental impact analyses did not, in certain respects, come to pass as expected. Similarly, NEPA does not require that the NRC withdraw an issued license solely because an aspect of the environmental review is subsequently vacated. However, *New York v. NRC* does not permit the NRC to grant licenses for any still-pending applications whose environmental reviews rely on Waste Confidence until the NRC prepares its revised analysis of the environmental impacts of continued storage, either on a site-specific basis or with a new generic analysis as is being done in the GEIS and revised Rule. For these reasons, while licenses granted before the Court of Appeals vacated the 2010 Waste Confidence update (75 FR 81037) remain valid, the NRC has not finalized any licensing actions that rely on Waste Confidence since that decision was issued (See NRC 2012b). No changes were made to the GEIS or Rule as a result of these comments.

(622-4-15) (622-1-2) (622-1-7) (688-14)

D.2.6 Comments Concerning Public Participation

D.2.6.1 – COMMENT: Commenters requested an extension of the comment period on the draft GEIS and proposed Rule or stated that the comment period should have been extended (especially in light of the government shutdown). One commenter wanted assurance that the meeting transcripts would be available a week before the comment deadline.

Commenters stated that time limits for oral comments imposed at the public meetings were too short. Conversely, another commenter stated that the NRC should have shortened the oral comment time limits to ensure that everyone would be given a chance to present their comments in-person at the public meetings. A commenter developed a video for their

comment, provided a link to the video, and requested that the NRC play the comment video at the start of the first public meeting in Rockville, Maryland.

Commenters had a number of concerns about the accessibility of the public meetings. A commenter stated that the NRC should make transcripts or recordings available of all of the public meetings. Other commenters requested that all public meetings on the draft GEIS and proposed Rule be webcast and include a teleconference line to increase public participation. One commenter noted that the NRC should also consider that many people may not have the technology to access webcast meetings. Several commenters requested that meetings that were cancelled due to the government shutdown be rescheduled. Another commenter noted that the NRC would not have held a public meeting if it had not been ordered by the court, and stressed the importance of having more meetings.

Commenters stated that the NRC is not listening to their concerns. Some commenters were unhappy that the GEIS will be finalized after the public meetings and wanted to know whether there would be an opportunity to comment on the final GEIS and Rule. Another commenter said the NRC should allow for more interaction and discussion, especially given the importance of the topic.

RESPONSE: The NRC disagrees with the comments. The comment period on the draft GEIS and proposed Rule was originally scheduled for 75 days; however, due to the government shutdown and subsequent postponement and rescheduling of five public meetings, the comment period was extended to 98 days, and ended on December 20, 2013. The 98-day public comment period was longer than typical rulemaking and NEPA comment periods for other agency actions. Further, draft versions of the documents were made available on the NRC's Waste Confidence website in late June 2013 so members of the public could begin to familiarize themselves with the documents prior to the start of the comment period in September. Upon publication of the draft GEIS and proposed Rule for comment, the NRC posted "tracked-changes" versions of the documents to allow commenters to quickly identify any changes between the June 2013 versions and the published drafts for public comment. Further, the NRC considered comments received after December 20, 2013 if it was practical to do so. However, only comments received prior to the deadline were guaranteed consideration in the NRC's revision of the GEIS and Rule.

The NRC attempted to maximize public participation in the rulemaking by holding 13 public meetings, 10 of which were regional meetings spread across the United States, and 3 of which were held at the NRC's headquarters in Rockville, Maryland. The NRC conducted 1-hour open houses prior to the start of the meetings where members of the public could talk personally with NRC staff and contractors who authored the GEIS and Rule. The three meetings at NRC headquarters featured a facilitated teleconference so participants unable to attend the regional meetings could call in and provide their comments over the phone. Two of these NRC headquarters meetings were webcast so participants could view the meetings remotely. The

final headquarters meeting on December 9, 2013, was a teleconference-only meeting, and the sole purpose of that meeting was to ensure that members of the public had a final chance to speak their comments on the record. Further, submitting comments orally was just one way in which comments were accepted. The NRC also accepted comments online by e-mail and at www.regulations.gov, and by mail and fax. Comments were given equal consideration regardless of how they were submitted, whether orally or in writing.

The NRC understands that many people travel long distances to attend public meetings in-person, so the NRC used the expertise of an independent contractor to facilitate the public meetings. Effective facilitation of the meetings included placing time limits on oral comments to ensure that everyone that wanted to make a comment could do so. When necessary, the NRC went beyond the 10:00 P.M. scheduled meeting end time so everyone that wanted to make a comment could do so. The NRC also collected any written testimony or supporting information that members of the public handed in at the public meetings and this material was added to the docket and considered as comments on the rulemaking.

The NRC acknowledges concerns regarding technological accessibility of webcasts; accordingly, the NRC provided moderated teleconferences and made available official transcripts of the meetings. In addition to providing meeting summaries and official transcripts for all the meetings, the NRC provided archived audio and video of the two NRC headquarters meetings, archived video of the two California meetings, and archived audio of the NRC headquarters teleconference. The NRC regrets that it was unable to accommodate requests to play videotaped comments at public meetings due to time constraints and efforts to ensure that everyone physically present could speak their comments.

The NRC disagrees with comments stating that the NRC does not listen. The NRC collected over 1,600 pages of transcribed written testimony from approximately 500 speakers, and received approximately 33,100 written comment submissions (approximately 32,000 of these were form letters). The NRC catalogued, reviewed, and responded to all unique comments. Consistent with NRC rulemaking and NEPA procedures, the GEIS and Rule were revised as needed in response to public comments received during the 98-day public comment period, and final versions of the rulemaking documents will not be issued for public comment upon their publication.

More information regarding the NRC's public outreach efforts and the comment period can be found in Section D.1 of this appendix and in Appendices A and C of the GEIS. No changes were made to the GEIS or Rule as a result of these comments.

(30-10-1) (30-22-1) (30-8-1) (30-10-2) (30-15-3) (112-11-1) (112-24-5) (222-7) (244-5-1) (245-3-1) (274-1) (312-1) (315-2) (325-1-3) (327-11-7) (328-11-7) (329-15-1) (329-16-1) (329-23-1) (329-14-2) (347-2) (376-4) (416-1) (419-1) (420-1) (561-1) (561-2) (561-3) (562-1) (615-2) (715-1) (717-3) (818-3) (823-18) (823-19) (824-1) (836-1) (866-1) (866-3) (878-1) (880-1) (882-4) (892-2) (892-3) (895-1) (906-2) (919-4-22) (921-1) (955-1) (956-1) (957-1) (958-1)

D.2.6.2 – COMMENT: Commenters provided criticism regarding the locations and accessibility of the Waste Confidence public meetings. Commenters requested that meetings be held in every reactor community, in locations along transportation routes, or in specific locations such as Atlanta, Georgia, areas of Virginia, and areas served by the Tennessee Valley Authority. A commenter questioned the NRC's citing of a lack of resources as one reason why a meeting was not held in Atlanta; the commenter observed that the NRC's Region 2 office is located in Atlanta. Commenters also criticized the NRC for not adequately advertising the public meetings and not providing sufficient notice for the rescheduled meetings in California. Commenters questioned why local or mainstream media did not publicize or cover the Waste Confidence meetings.

RESPONSE: The NRC acknowledges the comments criticizing the meeting locations and announcement of those meetings. The NRC attempted to maximize public participation in the rulemaking by holding 13 public meetings, 10 of which were regional meetings spread across the United States, and 3 of which were held at the NRC's headquarters in Rockville, Maryland. The NRC chose the locations for the regional public meetings by considering: comments on suggested meeting locations received during the scoping period; the geographic location of scoping participants and participants in NRC status update teleconferences; past NRC experience in conducting public meetings for nationally applicable rulemakings; and relative proximity to air and rail transportation hubs.

The NRC publicized the public meetings by issuing press releases, meeting notices, and *Federal Register* Notices; sending e-mails to its WCOutreach@nrc.gov distribution list; providing announcements during its August, September, and October status update teleconferences; and by posting to social media, including the NRC Blog and Twitter account. No changes were made to the GEIS or Rule as a result of these comments.

(30-12-2) (45-11-2) (230-8) (244-3-1) (245-43-1) (245-52-1) (245-17-2) (246-2-1) (246-3-1) (327-13-1) (329-18-1) (329-5-1) (329-18-2) (703-1) (838-2) (869-2) (919-6-4)

D.2.6.3 – COMMENT: Commenters generally criticized the Waste Confidence public meetings, meeting facilities, and public participation opportunities. Commenters expressed their belief that the NRC would not incorporate their comments into the GEIS and Rule, and therefore providing comments would be a futile exercise. One commenter requested that the NRC outline how it organized and considered all public comments pursuant to the Government Performance and Results Act of 1993. Some commenters expressed hope that the NRC would truly listen to and consider the public's comments and reiterated that public participation was vitally important to the rulemaking process. Other commenters provided concerns and suggestions to the NRC regarding public participation efforts and meeting procedures and facilities. One commenter noted that none of the five NRC Commissioners were present at the meetings and criticized the limitation of questions during the meetings. Comments also touched upon the behavior of members of the public that were seen as either pro- or anti-nuclear.

RESPONSE: The NRC acknowledges the comments providing criticism of and suggestions regarding its public participation opportunities, public meeting procedures, and meeting facilities. The NRC disagrees with comments stating that public comments will not be considered. The NRC collected over 1,600 pages of transcribed written testimony from approximately 500 speakers, and received approximately 33,100 written comment submissions (approximately 32,000 of these were form letters). The NRC catalogued, reviewed, and responded to all unique comments. In accordance with NRC rulemaking and NEPA procedures, the GEIS and Rule were revised as needed in response to public comments received during the 98-day public comment period. Requirements of the Government Performance and Results Act of 1993, which provide for the establishment of strategic planning and performance measurement in the Federal government, are not applicable to the NRC's consideration of public comments and are outside the scope of this rulemaking. More information on the NRC's public outreach efforts can be found in Section D.1 of this appendix and in Appendix C. No changes were made to the GEIS or Rule as a result of these comments.

(112-22-1) (163-9-1) (174-6) (203-2) (204-1) (245-48-1) (250-22-1) (250-39-2) (250-34-3) (250-51-5) (250-7-7) (250-51-9) (292-1) (314-3) (325-24-1) (325-24-2) (325-21-3) (326-50-2) (326-50-3) (326-60-6) (327-3-1) (327-42-1) (327-44-1) (327-5-2) (327-33-3) (327-38-3) (328-16-4) (328-17-4) (328-15-6) (329-21-1) (329-32-1) (329-31-4) (329-32-8) (349-2) (381-3) (410-33) (416-3) (445-1) (445-4) (445-6) (532-15) (578-1) (603-21) (612-5) (639-1) (646-11) (684-4) (684-9) (686-18) (693-3-3) (693-3-9) (744-10) (744-3) (809-2) (836-11) (836-12) (838-1) (847-1) (862-10) (862-5) (862-7) (868-1) (868-3) (869-1) (872-2) (872-3) (872-4) (872-5) (872-6) (872-7) (873-1) (873-2) (873-3) (876-2) (877-1) (878-2) (879-1) (888-2) (888-3) (888-4) (888-5) (888-6) (889-1) (889-2) (890-10) (890-2) (891-1) (891-2) (892-1) (894-1) (895-3) (895-4) (895-5) (902-1) (902-11) (902-3) (902-4) (902-5) (902-8) (902-9) (903-1) (903-2) (903-5) (903-6) (903-8) (930-1-4) (930-1-5) (933-10)

D.2.6.4 – COMMENT: Commenters expressed gratitude, appreciation, and support for the NRC's public participation and outreach efforts related to the rulemaking. One commenter praised the NRC's process, but noted that in spite of traveling a long way to the Charlotte, North Carolina meeting, the commenter had to leave before being called on to present a comment.

RESPONSE: The NRC acknowledges the comments supporting the rulemaking public participation opportunities. The NRC regrets that one commenter had to leave before the meeting closed and therefore was unable to present an oral comment, however the NRC is appreciative of the commenter's written submission. No changes were made to the GEIS or Rule as a result of these comments.

(30-18-1) (30-20-1) (30-23-1) (30-3-1) (30-6-1) (30-3-4) (30-16-7) (61-1) (61-6) (112-17-1) (112-25-3) (122-3) (163-15-1) (163-18-2) (163-29-2) (163-17-4) (182-1) (201-1) (212-2) (244-14-1) (244-7-1) (244-9-1) (244-11-14) (244-9-2) (244-11-3) (244-1-5) (244-2-5) (244-7-6) (245-25-1) (245-44-1) (245-34-6) (246-12-1) (246-20-2) (250-14-1) (250-3-1) (250-58-1) (250-6-1) (250-62-

1) (250-65-1) (250-67-1) (250-15-2) (250-61-2) (250-61-4) (250-32-5) (250-57-5) (250-61-8) (255-1) (273-3) (276-1) (303-1) (325-13-1) (325-26-1) (325-5-1) (325-16-5) (325-32-5) (325-13-8) (326-22-1) (326-24-1) (326-35-1) (326-37-1) (326-39-1) (326-60-1) (326-18-2) (326-1-3) (326-25-5) (328-1-1) (328-2-1) (328-8-1) (328-1-11) (329-10-1) (347-1) (421-1) (535-3) (543-1) (598-1) (598-8) (646-1) (672-2) (685-3) (689-1) (694-1-12) (697-1-16) (744-1) (809-1) (820-1) (825-4) (875-1) (876-1) (893-1) (913-16) (948-3)

D.2.6.5 – COMMENT: A commenter questioned whether money from the Nuclear Waste Fund was used for the Waste Confidence public meetings.

RESPONSE: Funding for the NRC's public meetings came from the NRC's general budget and did not come from the Nuclear Waste Fund. No changes were made to the GEIS or Rule as a result of this comment.

(889-3)

D.2.6.6 – COMMENT: A commenter noted the absence of a staff member from Congressman Issa's office at the Waste Confidence public meeting in Carlsbad, California, and questioned whether the NRC had any interactions with Congressman Issa regarding the rulemaking.

RESPONSE: The NRC keeps Congress fully and currently informed of the agency's regulatory activities. The NRC's Office of Congressional Affairs is the main conduit for NRC communications with Congress. Members of the Commission and NRC senior staff regularly work with the NRC's Office of Congressional Affairs to provide information to Congress and reply to inquiries from various committees of the House and the Senate and to Members of Congress who are interested in aspects of NRC responsibilities. No changes were made to the GEIS or Rule as a result of this comment.

(325-31-1)

D.2.7 Comments Concerning the Scope of the GEIS

D.2.7.1 – COMMENT: The NRC received comments asserting that the scope of the GEIS failed to include certain topics. One comment stated that the GEIS fails to address public safety and, because the scope is too narrow, the GEIS failed to effectively analyze the impacts on human health and the environment. The comment also claimed the GEIS failed to evaluate the indirect impacts of continued storage of spent fuel. Another commenter claimed that the NRC failed to address the environmental, political, and economic challenges associated with the continued production and accumulation of long-lived radioactive waste. The comment also stated that the NRC does not have a strategy for the long-term management of these wastes. Another comment indicated that, in general, not all of the framework for the management of spent fuel was in place. Two other comments asserted that the NRC should include the environmental impacts of spent fuel disposal within the GEIS. One comment claimed that the NRC is incorrect

to claim that the environmental impacts of spent fuel disposal are irrelevant to the GEIS. That same comment cited language used in the License Renewal GEIS that stated the environmental impacts of spent fuel disposal could not be resolved until the waste confidence EIS was completed. Another comment stated that by evaluating only the impacts of spent fuel storage, the NRC is excluding a major part of the nuclear fuel cycle. In particular, whether or not a repository is available will affect the impacts for both storage and disposal.

RESPONSE: The NRC disagrees with the comments. In the GEIS, the NRC has addressed the potential impacts to human health and the environment from the continued storage of spent fuel. For example, the GEIS includes evaluations of the impacts of normal releases and of accidents. The comment regarding indirect impacts provides insufficient information to understand what was expected in the GEIS. However, the GEIS does address indirect impacts, such as socioeconomic impacts (see, for example, the discussion in Section 4.2 of the GEIS). The long-term plan for the disposal of spent fuel is within the purview of the President and Congress; the current plan established by Congress is codified in the Nuclear Waste Policy Act (NWPA). While the NRC recognizes that the implementation of the current plan faces political and societal challenges, it is not the NRC's role to set policy in this area.

The impacts of disposal in a repository are addressed elsewhere in 10 CFR Part 51 and are beyond the scope of the current action. One comment argued that a footnote in the License Renewal GEIS implied that the Waste Confidence GEIS must address the impacts of spent fuel disposal. That interpretation of that footnote is incorrect. The footnote indicates that the work on the Rule was needed to provide information regarding the feasibility of a repository and the possible timing for the availability of a repository. This portion of the license renewal table was included in the proposed rulemaking *Federal Register* Notice (78 FR 37282, page 37322), and the NRC is including amendments to the license renewal table as part of the final rulemaking for this proceeding.

Finally, the GEIS specifically addresses how environmental impacts could be affected by delayed repository availability through the analysis of impacts in the three timeframes: short-term, long-term, and indefinite. No changes were made to the GEIS or Rule as a result of these comments.

(328-12-6) (714-1-23) (783-1-15) (897-7-12) (898-4-24)

D.2.7.2 – COMMENT: Several commenters suggested issues that they believe should have been within the scope of this GEIS. One commenter stated that the GEIS should have considered the complete safety of the environment and all living and interdependent organisms in the environment, economic impact to tax payers on prior mishandling, and a study of the industry and its liability for unforeseen consequences. Another commenter said the GEIS must consider various storage methods for spent fuel (e.g., hardened onsite storage [HOSS] and expedited transfer). The commenter also stated that the GEIS should have considered the

storage and transport of high-burnup fuel. One commenter requested that the NRC seek input from the public about the confidence in reclaiming “orphaned” sites and the fairness of living near storage facilities. Another commenter stated that the GEIS should be about more than just continued onsite storage, it should also more thoroughly address transportation, final disposition in a repository, and away-from-reactor storage. Another commenter stated that to satisfy EPA requirements, the GEIS should consider each reactor site separately and evaluate all costs involved. Another commenter stated that the NRC should consider alternatives for onsite and offsite storage of waste during and after the period of extended operation, offsite impacts during continued operation, long-term impacts and safety of the generation and storage of radioactive waste, comparative impacts of storage in pools versus dry storage, implications of storage on decommissioning, effects of storage and disposal if a repository is delayed, and alternatives and mitigations for these impacts. The commenter also stated that these issues are not generic and should be evaluated on a site-specific basis and the GEIS should therefore be tiered off of in subsequent site-specific EISs.

RESPONSE: The NRC agrees in part and disagrees in part with these comments. The scope of the GEIS is limited to the impacts of continued storage. Issues outside this scope, such as industry liability, selecting a specific dry storage approach (e.g., HOSS), and transportation outside of the period of continued storage are, therefore, not addressed in the GEIS. Additional information on other fuel storage options is provided in Section D.2.14.2 of this appendix. The evaluation in the GEIS addressed impacts to all resources that might be affected by the continued storage of spent fuel. With regard to spent fuel burnup, Chapter 2 of the GEIS explains that for purposes of environmental impact analysis, the NRC relies on the larger lifetime amount of spent fuel discharged at low burnups. However, as discussed in Section D.2.16.13 of this appendix, information on the characteristics of low-burnup, high-burnup and mixed-oxide (MOX) fuels has been added to the GEIS in Appendix I to help clarify the similarities between these fuel types. Regarding site-specific analyses, this document is, by its nature, a generic evaluation. Prior to the completion of an individual licensing action, the NRC will conduct a site-specific environmental review and document the results of this review in an EA and FONSI or EIS. For more information regarding the generic evaluation of impacts, see Section D.2.11.1 of this appendix.

Comments that address activities that occur during plant operations (including the generation of the waste) are outside the scope of the GEIS and Rule.

The NRC included the impacts of both pool and dry cask storage in its evaluation, but did not compare them to each other in the GEIS. As discussed in the GEIS, a spent fuel pool will already exist at each site and its impacts to the environment in the period of continued storage are minor. The NRC assumes that all fuel will have been moved from the pool to casks by the end of the short-term timeframe. Therefore, both wet and dry storage are a necessary part of

the storage of the fuel during continued storage and a comparison of them is not necessary. For additional information, see Section D.2.38.10 of this appendix.

The GEIS addresses the cumulative impacts of continued storage and decommissioning (in Chapter 6) and the impacts of a repository being delayed or not available (Chapters 4 and 5). For additional information regarding decommissioning, see Section D.2.43.1 of this appendix. Alternatives are discussed in Section 1.6 of the GEIS—these are (as NEPA requires) alternatives to the proposed action (revising the Rule). In general, the NRC will address mitigation in site-specific licensing reviews. Section D.2.11.1 of this appendix provides additional insight into this approach. However, the GEIS does discuss mitigation related to aging, damaged, or degraded fuel (see Section 2.2.2.1 of the GEIS and Section D.2.17.4 of this appendix for additional information regarding this issue). Any determinations by the NRC about whether to require mitigation measures of any type will occur on a site-specific basis during facility licensing or during the course of ongoing NRC oversight. No changes were made to the GEIS or Rule as a result of these comments.

(11-2) (30-21-3) (45-11-11) (112-28-3) (246-32-2) (611-19) (693-1-11) (706-1-15)

D.2.7.3 – COMMENT: The NRC received a comment requesting the NRC clarify that ESPs are not included within the scope of the GEIS and Rule. The commenter stated that because ESPs do not authorize the generation or storage of spent fuel, NEPA does not require consideration of the environmental impacts of continued storage of spent fuel for ESP applications. The commenter also provided numerous conforming revisions to the GEIS to clarify that waste confidence does not apply to ESPs, in particular the cost-benefit analysis in Chapter 7 and in Appendix H.

RESPONSE: The NRC agrees with the comment that clarification of the scope of the proposed Rule change is appropriate. The NRC recognizes that neither the current language of the Rule, nor the proposed revision to that section, expressly addresses whether the Rule applies to ESP reviews.

However, the NRC disagrees with the comment that ESPs are not covered by the Rule. The clear purpose of the regulation was to preclude the need for a site-specific analysis of the environmental impacts of continued storage for all power-reactor-related and ISFSI-related licensing actions, including spent fuel generated by new reactors. This purpose is evident from the Commission's intention in past Waste Confidence proceedings and the 2007 rulemaking on Part 52 to encompass waste produced by a new generation of reactors—including those licensed under the Part 52 regime, which includes ESPs (49 FR 34688; 55 FR 38472; and 72 FR 49352). That the regulation did not expressly include ESPs in the list of reactor licensing actions under Parts 50 and 52 for which a site-specific analysis of the environmental impacts of continued storage is not necessary, coupled with the absence of an explanation as to why ESPs were not included in the regulation, is evidence that this was an oversight on the part of the NRC. Not including ESPs would also lead to the anomalous result—again, unexplained by NRC—of

precluding site-specific consideration of the environmental impacts of continued storage of spent fuel in licensing actions that result in the production of spent fuel, but at the same time allowing this site-specific consideration at an earlier licensing stage—the ESP—which never results in the production of spent fuel. Accordingly, the NRC has consistently interpreted the Rule to include ESPs within the generic reach of that Rule as regards discussion of continued storage impacts in environmental analyses, and in the same manner applicable to those licenses explicitly listed in the Rule. This interpretation has been approved by several Atomic Safety and Licensing Boards (NRC 2004a; NRC 2004b). For additional information, see Section D.2.3.5 of this appendix.

For these reasons, the language of the Rule has been revised to clarify that ESPs fall within the reach of the Rule. No changes were made to the GEIS as a result of these comments.

(810-1) (810-10) (810-11) (810-12) (810-13) (810-2) (810-4) (810-5)

D.2.7.4 – COMMENT: The NRC received several comments concerning certain waste types. These commenters stated that reprocessing, Department of Defense waste, and “greater-than-class-C” (GTCC) low-level waste should have been within scope of the GEIS and Rule. One commenter suggested that the NRC conclude that the GEIS analysis also applies equally to GTCC waste since there is the possibility of GTCC waste sharing the same disposal path as spent fuel. Another commenter questioned what the NRC is doing about Department of Defense waste.

RESPONSE: The NRC disagrees with these comments. The scope of this action is limited to the impacts of the continued storage of spent fuel from commercial nuclear power reactors. Wastes from the Department of Defense are not within the regulatory control of the NRC and are not within the scope of this GEIS. Reprocessing is one potential path for the eventual disposition of the spent fuel, not unlike disposal in a geologic repository. But either approach for the disposal of the fuel, by definition, occurs after the period of continued storage. It is, therefore, also outside the scope of the current action. Finally, GTCC low-level waste, while often handled in a manner similar to spent fuel, is not spent fuel and its handling and disposal are also outside the scope of the current action. No changes were made to the GEIS or Rule as a result of these comments.

(618-11) (693-4-8) (827-7-3) (896-1)

D.2.7.5 – COMMENT: One commenter requested that the NRC make site-specific recommendations for moving spent fuel from closed nuclear facilities.

RESPONSE: The NRC disagrees with this comment. The GEIS evaluates the environmental impacts during the period of continued storage. Any policy established by the Commission for the treatment of spent fuel at closed nuclear facilities would be addressed through rulemaking or, for site-specific issues, through the licensing process. The recommendation requested by

the comment is outside the scope of the GEIS and Rule. No changes were made to the GEIS or Rule as a result of this comment.

(624-1)

D.2.7.6 – COMMENT: One comment requested the NRC provide an analysis evaluating the role of nuclear power in the commercial energy sector in the distant future in the GEIS.

RESPONSE: The NRC disagrees with this comment. The scope of this action is limited to the impacts of the continued storage of spent fuel. That analysis is unaffected by the extent to which nuclear power is used in the future to meet the energy needs in the United States, because licensing decisions will continue to be made on a case-by-case basis. In addition, the NRC is not responsible for promoting the use of nuclear power or setting national policy on its use. No changes were made to the GEIS or Rule as a result of this comment.

(608-7)

D.2.7.7 – COMMENT: One commenter stated that the NRC must include a planning component in the GEIS. The commenter suggested that the planning component would have five elements:

- Execution (which would include full, phased environmental site evaluations of shutdown and operating storage facilities before licensing actions are taken, as well as an adaptive, phased management plan);
- Analysis and application (which would be looking at various studies [e.g., the effects of uprated burnup fuels and the three engineering studies conducted for the DOE Yucca Mountain no-action alternative]);
- Initiation (which would entail developing items [e.g., guidance documents] for institutional controls);
- Adoption (e.g., adoption of minimum standards for long-term at-reactor ISFSI storage); and
- Direction (e.g., direct utilities to do long-range planning specifying what will be needed to ensure complete replacement every 100 years).

The commenter also states that the scope of the GEIS is too narrow and must be expanded to include the indirect impacts of continued storage.

RESPONSE: The NRC disagrees with this comment. The types of activities described in the comment might be appropriate as part of a site-specific licensing action, for example for the licensing of an away-from-reactor ISFSI. However, that is not the action currently under consideration by the NRC. Therefore, this type of plan is not included in the GEIS. Regarding the inclusion of indirect impacts, the NRC did address indirect impacts, as defined in 40 CFR

1508.8, associated with continued storage. See, for example, the discussion of socioeconomic impacts in Section 4.2. No changes were made to the GEIS or Rule a result of this comment.

(820-15)

D.2.7.8 – COMMENT: The NRC received one comment that requested that the NRC include the previous five findings in the GEIS and include a discussion of whether the five findings are any more relevant to an examination of the comparative safety of various modes of radioactive waste storage.

RESPONSE: The NRC disagrees with the comment. The five findings that are mentioned in the comment are discussed in detail in the Background section (Part II) of the *Federal Register* Notice for the rulemaking (78 FR 56776, pages 56778-56779). As discussed in Appendix B to the GEIS and the Discussion section (Part III) of the *Federal Register* Notice (78 FR 56776, pages 56782 and 56790), the NRC has determined that it is no longer necessary to make five findings as part of this proceeding. The issues that were previously addressed in the five findings are discussed in more detail in Appendix B to the GEIS and in Section D.2.4.1 of this appendix. No changes were made to the GEIS or Rule as a result of this comment.

(937-24)

D.2.7.9 – COMMENT: The NRC received comments that stated that the GEIS cannot rely on Table S–3, which provides the environmental impacts of the uranium fuel cycle, because the analysis that supports the table presumed a repository would be available. One comment argued that the NRC cannot rely on Table S–3 to cover the impacts of the uranium fuel cycle in the indefinite timeframe because it does not evaluate the environmental impacts of failing to have a geologic repository. Another commenter stated that the Court of Appeals objected to the NRC depending on Table S–3 in support of the Rule.

RESPONSE: The NRC disagrees with the comments. Activities covered by 10 CFR Part 51, Table S–3 are outside the scope of the GEIS and Rule. Table S–3 covers impacts that are not caused by continued storage (see Figure 1-2 of the GEIS). The references to Table S–3 in the GEIS were included to provide readers with information about activities outside the scope of the direct and indirect impact analyses of continued storage. The GEIS itself in no way relies on the analyses in Table S–3 for the evaluation of the direct and indirect impacts of continued storage in Chapters 4 and 5.

Impacts addressed by Table S–3 could overlap in time and geographical extent with the impacts of continued storage. Therefore, the impacts addressed in Table S–3 could contribute to cumulative impacts. In its evaluation of the cumulative impacts of continued storage (see Chapter 6), the NRC does not rely directly on Table S–3. However, the NRC does provide an estimate of the carbon dioxide emissions of a reactor, including the fuel cycle, in Table 6-2 of

the GEIS. That estimate is based, in part, on the data that supports Table S–3. As discussed in Section 6.2.3 of the License Renewal GEIS (NUREG–1437, NRC 1996a), the use of modern fuel cycle equipment is expected to reduce the power needed by the fuel cycle, and thus reduce emissions. Therefore, the estimate of emissions shown in this GEIS is conservatively high.

The NRC also mentions impacts related to the fuel cycle in Sections 6.4.14.1 and 6.4.15.2 in relation to waste-management and transportation impacts. These discussions reference Section 4.12 of the 2013 revision to NUREG–1437 (NRC 2013m). As discussed in that section, and in the 1996 version of NUREG–1437, the NRC concludes that the assumptions and methodology used in preparing Table S–3 were conservative enough that the impacts described by the use of Table S–3 would still be bounding. The NRC is not aware of any new information that has been discovered since 2013 that would cause it to revisit these conclusions regarding Table S–3.

Therefore, to the extent that Table S-3 is used indirectly in Chapter 6 of the GEIS, the NRC concludes that this use is appropriate for the purposes of the cumulative impacts evaluation for continued storage.

Another comment asserted that the Court of Appeals objected to the NRC's reliance upon Table S–3 in the 2010 Waste Confidence proceeding (*New York v. NRC*). The NRC did not "rely" on Table S–3 in the 2010 Waste Confidence proceeding. In *New York v. NRC*, the Court of Appeals held that Table S–3 presumes the existence of a geologic repository, and therefore "cannot explain the environmental effects of a failure to secure a permanent facility". Accordingly, the Court of Appeals did not suggest that the analysis in Table S–3 is no longer reliable. Table S–3 was approved by the Supreme Court in *Baltimore Gas & Elec. Co. v. NRDC*. No changes were made to the GEIS or Rule as a result of these comments.

(706-3-15) (706-5-3) (813-3)

D.2.7.10 – COMMENT: The NRC received several comments about the uranium fuel cycle. Commenters stated that the NRC should have considered the environmental impacts of the entire uranium fuel cycle, including costs, in the GEIS. One commenter believes the environmental footprint of the nuclear fuel cycle should be evaluated and compared to the footprint of renewable energies. Other commenters requested that a financial accounting of the costs of the uranium fuel cycle be completed, including industry subsidies.

RESPONSE: The NRC disagrees with these comments. The scope of this action is limited to the impacts of the continued storage of spent fuel. The environmental impacts of the uranium fuel cycle were previously evaluated by the NRC and codified in 10 CFR 51.51. Any comments on those impacts should be raised in a petition for rulemaking. No changes were made to the GEIS or Rule as a result of these comments.

(30-21-11) (75-2) (250-2-1) (552-1-17) (707-8)

D.2.7.11 – COMMENT: The NRC received several comments that stated that the NRC should have included an analysis of the environmental impacts of a consolidated interim storage facility in the GEIS. One comment noted that including a consolidated interim storage facility would help the NRC prove that it is not endorsing indefinite storage. Another comment took issue with statements made by an industry organization about how the NRC would prepare an EA for a consolidated interim storage facility application; the comment indicated that such an EA would be less thorough than an EIS.

RESPONSE: The NRC disagrees with the comments. The GEIS was prepared by the NRC to support the rulemaking regarding the continued storage of spent fuel. The evaluation of impacts for any specific facility, including a consolidated interim storage facility, will be addressed in a site-specific licensing proceeding for that facility. However, as part of the impacts analysis in the GEIS, the NRC has analyzed the impacts of the possible construction and operation of a hypothetical away-from-reactor storage facility. The NRC included this analysis because it is reasonably foreseeable that spent fuel from a new or relicensed reactor could someday be sent to an away-from-reactor storage facility prior to disposal in a repository (see also Section D.2.16.3 of this appendix. If an applicant submits a request to the NRC to license a consolidated interim storage facility, then the NRC's review of that application would include an appropriate environmental review. In the only example of such a request, for the Private Fuel Storage Facility (PFSF), the NRC prepared and published an EIS. Further, as clarified in the *Federal Register* Notice for the Rule (78 FR 56776), an applicant for an away-from-reactor storage facility would not be able to rely on the GEIS or the Rule to avoid the consideration of the environmental impacts of constructing and operating that away -from-reactor storage facility. The analysis in this GEIS would only apply to any necessary environmental analysis of the environmental impacts of storing the spent fuel after the end of the facility's license term. No changes were made to the GEIS or Rule as a result of these comments.

(637-10) (937-8)

D.2.7.12 – COMMENT: The NRC received multiple comments on the inclusion of small modular reactors (SMRs) in the GEIS. These commenters did not agree that fuel from SMRs should be included in the GEIS. The commenters gave various reasons for why these fuels should not be included such as SMR technology is not fully developed. One commenter asserted that since we have existing technical challenges with current spent fuel, the NRC should not use the same standards for "new" fuel types. Another commenter requested that the NRC address nuclear plants used for tritium production and reference existing environmental analyses in the final GEIS and confirm it is bounded by the GEIS.

RESPONSE: The NRC disagrees with these comments. The NRC has not included all SMR spent fuel within the scope of the GEIS. The only in-scope spent fuel from SMRs is spent fuel

from integral pressurized water reactors. These advanced reactor designs are small light water reactors that would use nuclear fuel that is substantially similar to that already in use in current U.S. light water reactors.

The analysis in the GEIS does encompass spent fuel from light water reactors used for tritium production. As discussed in the comment letter, Watts Bar Nuclear Unit 1 is authorized to operate with fuel assemblies that have been modified to support tritium production. Section 2.1.1.3 of the GEIS makes clear that such fuel is included in the GEIS analysis. No changes were made to the GEIS or Rule as a result of these comments.

(23-3) (694-2-20) (703-11)

D.2.7.13 – COMMENT: Some commenters provided a reply to a prior comment that the "NRC need not assess the environmental impacts of nuclear plant operation more generally, in order to fulfill the requirements of the Waste Confidence Decision." The commenters stated that assessing environmental impacts of nuclear power plants more generally is implicitly required because there is no waste confidence, and stated that it is immoral to continue to generate nuclear waste.

RESPONSE: The NRC disagrees with the comments. The NRC evaluates the environmental impacts of power plant operation during NEPA reviews associated with licensing actions (e.g., combined license or license renewal applications). The environmental impacts addressed within the scope of this GEIS relate only to continued storage. No changes were made to the GEIS or Rule as a result of these comments.

(616-1) (709-1) (856-1)

D.2.7.14 – COMMENT: The NRC received comments expressing general support for the current scope of the GEIS. One commenter agreed that the Yucca Mountain application review is appropriately outside the scope of the GEIS. Other commenters agreed that the scope is appropriate and foreign spent fuel, need for nuclear power, and reprocessing are therefore correctly classified as out-of-scope. One commenter stated that the GEIS addresses the issues raised by the Court of Appeals, specifically spent fuel pool leaks, spent fuel pool fires, and the no-repository scenario. One commenter agreed that the analysis in the GEIS should include sabotage, terrorist acts, and current and future spent fuel pool leaks. Another commenter noted understanding of the need to address transportation, storage, and disposal of used nuclear fuel.

RESPONSE: The NRC agrees with these comments. The comments are general in nature and, therefore, no changes were made to the GEIS or Rule as a result of these comments.

(30-3-7) (30-7-7) (230-10) (534-4) (534-6) (697-2-2) (697-2-22) (825-3)

D.2.8 Comments Concerning Site-Specific Issues

D.2.8.1 – COMMENT: Many commenters expressed concerns related to particular nuclear power plants or spent fuel storage facilities, including DOE sites. Commenters raised issues including the performance histories of specific sites, radioactive releases and leaks, security, evacuation procedures, seismic risks, the potential for an accident like the one at Fukushima Dai-ichi, and NRC oversight and enforcement. Commenters expressed the belief that spent fuel should not be stored onsite at particular sites or in their communities. The commenters stated that individual sites should be closed, are at risk of accidents, or have a poor safety history and that the NRC should improve oversight. Other comments raised concerns about plants currently undergoing decommissioning. Some commenters implied that the GEIS should analyze the issues at individual plants on a site-specific basis.

RESPONSE: The NRC agrees that the environmental impacts of a nuclear plant or specifically licensed spent fuel storage facility must be considered during the site-specific licensing review for that particular facility. In this respect, this GEIS satisfies only a small portion of the NRC's NEPA obligations related to the issuance of a reactor or specific spent fuel storage facility license by generically evaluating the environmental impacts of spent fuel storage beyond the facility's license term. During the review of a facility licensing action, the NRC will conduct an environmental review and document the results of this review in an EA and FONSI or EIS. Whether for a power reactor or specifically licensed ISFSI, that site-specific environmental review will address, among other things, the environmental impacts of spent fuel storage during the license term. Any findings of the environmental review that are not precluded from challenge by Rule may be challenged by a petitioner during initial licensing of a facility and at license renewal. See Entergy Nuclear Vermont Yankee LLC and Entergy Nuclear Operations, Inc. (Vermont Yankee Nuclear Power Station), CLI-07-03 (NRC 2007a). An individual may also request that a rule not be applied in a particular proceeding when special circumstances exist. For a more detailed discussion on waivers see Section D.2.4.7 of this appendix. Taken together, the GEIS and other environmental reviews provide the decisionmaker with a complete environmental analysis of the impacts associated with the operation of a nuclear power facility and spent fuel storage facility.

The GEIS makes impact determinations that apply to all reactors and spent fuel storage sites. While the comments discussed site-specific characteristics to show why a generic approach should not apply to one or more particular facilities, their information did not justify changing the generic impact determinations in the GEIS. Further, none of the comments demonstrated that the environmental impacts of spent fuel storage in the continued storage period would differ from the impacts during the licensed period of operations, which will be assessed in the site-specific licensing review for each facility. For additional comments and NRC responses regarding the generic approach to the rulemaking see Section D.2.11 of this appendix.

Many comments requested that spent fuel be moved from spent fuel pools to dry casks, or moved from a particular site and stored or disposed of elsewhere. As explained in the GEIS, spent fuel is currently being stored in spent fuel pools and ISFSIs (where available) at all commercial nuclear power plants in the United States. Spent fuel will likely continue to be stored at existing nuclear power plant sites after reactor shutdown and decommissioning. Additional comments concerning expedited transfer of spent fuel into dry casks are addressed in Section D.2.50.1 of this appendix.

To the extent that commenters raised issues unrelated to the environmental impacts of continued storage of spent fuel (e.g., operating issues at particular plants), these issues are beyond the scope of the GEIS and Rule. The NRC addresses issues at operating plants through a combination of regulatory requirements; licensing; safety oversight, including inspection, assessment of performance, and enforcement; operational experience evaluation; and regulatory support activities. More information about reporting safety concerns involving a nuclear reactor, nuclear fuel facility, or radioactive materials can be found at http://www.nrc.gov/about-nrc/regulatory/allegations/safety-concern.html. Additional comments regarding reactor accidents are addressed in Section D.2.51 of this appendix. No changes were made to the GEIS or Rule as a result of these comments.

(22-1) (39-2) (45-11-7) (50-5) (53-1) (57-2) (63-11) (63-2) (63-6) (63-8) (64-10) (66-1) (95-1) (98-1) (102-5) (106-1) (112-14-1) (112-23-1) (112-7-1) (112-13-2) (112-15-3) (112-10-7) (112-5-8) (117-4) (121-1) (131-1) (136-3) (136-4) (136-6) (137-3) (158-4) (163-32-1) (163-34-1) (163-45-1) (163-46-1) (163-15-2) (163-25-2) (163-37-2) (163-42-2) (163-33-3) (163-35-3) (163-49-3) (163-33-4) (163-33-5) (163-16-6) (163-20-6) (163-15-7) (174-10) (190-4) (207-2) (214-1) (218-6) (218-9) (220-1) (220-3) (230-1) (231-2) (232-2) (233-1) (236-1) (236-3) (243-1) (244-3-8) (245-10-1) (245-13-3) (245-19-4) (245-13-5) (246-28-1) (246-17-3) (246-9-3) (246-23-4) (246-17-5) (249-13) (249-16) (249-4) (249-6) (249-7) (250-7-2) (250-20-4) (250-7-5) (252-2) (254-3) (269-2) (272-4) (280-11) (280-2) (280-6) (280-8) (283-2) (283-3) (284-11) (285-1) (286-1) (287-4) (289-1) (291-1) (298-1) (299-2) (301-1) (311-1) (318-1) (325-21-1) (325-29-1) (325-10-2) (325-12-2) (325-24-4) (325-3-4) (325-7-5) (325-12-6) (326-14-1) (326-53-1) (326-54-1) (326-62-1) (326-10-2) (326-4-2) (326-45-2) (326-58-2) (326-20-3) (326-23-3) (326-47-4) (326-52-4) (326-8-4) (326-4-5) (326-43-5) (326-63-5) (327-10-1) (327-8-1) (327-10-2) (327-11-2) (327-10-4) (327-9-4) (327-10-5) (327-2-5) (327-27-6) (327-10-7) (329-12-1) (329-13-1) (329-3-1) (329-4-1) (329-8-2) (329-13-3) (329-23-3) (329-20-4) (337-1) (338-1) (344-2) (345-1) (348-4) (352-4) (365-1) (369-1) (373-4) (377-4-1) (377-3-10) (377-3-11) (377-4-11) (377-3-12) (377-3-13) (377-4-13) (377-4-14) (377-3-15) (377-3-16) (377-3-17) (377-4-17) (377-3-18) (377-4-18) (377-4-19) (377-1-2) (377-4-2) (377-4-3) (377-5-3) (377-4-4) (377-5-4) (377-4-5) (377-3-7) (377-4-7) (377-3-8) (377-4-8) (377-3-9) (377-5-9) (395-1) (396-1) (397-1) (406-5) (407-1) (407-2) (434-1) (447-1-18) (469-1) (476-1) (476-2) (478-2) (481-1) (482-1) (487-1) (501-1) (501-4) (510-2) (515-11) (548-1) (548-11) (548-6) (552-3-1) (552-2-13) (552-2-14) (554-1) (562-11) (562-3) (562-7) (562-9) (566-11) (571-2) (584-1) (589-1) (589-3) (591-1) (604-4) (605-1) (609-1) (609-3) (611-1) (611-2)

(611-3) (611-40) (614-2) (614-4) (619-2-10) (619-1-2) (619-1-3) (632-1) (658-1) (665-1) (665-6) (668-2) (678-2) (680-2) (686-22) (701-10) (701-7) (708-3) (710-6) (710-7) (710-8) (717-1) (717-4) (717-5) (717-6) (718-1-1) (718-1-13) (718-1-21) (749-1) (769-1) (782-1) (783-1-3) (793-1) (793-4) (795-1) (799-1) (804-1) (811-1) (811-4) (823-10) (823-33) (823-35) (823-36) (823-37) (837-1) (848-2) (857-2) (858-1) (864-3) (887-1) (907-3) (918-3) (919-1-11) (919-5-11) (919-1-12) (919-5-12) (919-1-13) (919-5-13) (919-1-14) (919-5-14) (919-2-16) (919-4-21) (919-4-3) (919-1-6) (919-1-7) (933-5) (934-1) (945-2) (945-5) (945-7) (945-8) (959-3) (965-1)

D.2.8.2 – COMMENT: Commenters raised general concerns about specific nuclear power plants and waste sites, including DOE sites and a Canadian proposed low-level waste site. Commenters primarily expressed general opposition to local plants and their owners, including opposition to proposed and approved new reactors and reactor license renewals. Many commenters requested that plants be shut down. Commenters were generally concerned about the safety of their local plant, citing risks of accidents similar to Fukushima Dai-ichi, poor safety history, insufficient NRC oversight, radioactive leaks into local waters, poor emergency planning procedures, and health impacts of radiation. A few commenters expressed support of local plants, their continued safe operation, and the NRC.

RESPONSE: These comments are unrelated to the environmental impacts of continued storage of spent fuel and are beyond the scope of the GEIS and Rule. The NRC addresses issues at operating plants through a combination of regulatory requirements; licensing; safety oversight, including inspection, assessment of performance, and enforcement; operational experience evaluation; and regulatory support activities. More information about reporting safety concerns involving a nuclear reactor, nuclear fuel facility, or radioactive materials can be found at http://www.nrc.gov/about-nrc/regulatory/allegations/safety-concern.html. Additional comments regarding reactor accidents are addressed in Section D.2.51 of this appendix. No changes were made to the GEIS or Rule as a result of these comments.

(25-1) (30-15-2) (30-22-3) (30-6-8) (43-1) (45-12-5) (45-9-5) (45-12-6) (45-9-7) (54-3) (76-1) (87-1) (112-29-1) (112-15-2) (112-2-2) (112-24-2) (112-9-2) (112-22-4) (115-1) (118-1) (118-3) (119-2) (120-2) (120-4) (120-6) (120-8) (121-3) (121-4) (121-5) (125-1) (136-1) (137-1) (163-16-1) (163-25-1) (163-13-2) (163-4-2) (163-45-2) (163-8-2) (163-20-3) (163-25-3) (163-26-3) (163-51-3) (163-32-4) (163-26-5) (163-32-5) (181-5) (183-5) (218-4) (223-1) (230-14) (244-3-6) (245-19-1) (245-19-2) (245-18-3) (245-6-3) (246-18-2) (246-16-5) (250-20-1) (250-50-1) (250-66-1) (250-22-2) (250-3-3) (250-42-3) (250-29-9) (253-2) (275-4) (284-4) (292-4) (298-3) (312-3) (325-28-1) (325-8-1) (325-14-2) (325-17-3) (325-18-3) (325-7-8) (326-21-1) (326-27-1) (326-33-1) (326-43-2) (326-47-2) (326-33-3) (326-34-3) (326-35-3) (326-37-3) (326-59-3) (326-35-4) (326-9-7) (327-20-2) (327-22-2) (327-29-2) (327-20-3) (327-5-3) (328-17-3) (329-25-1) (329-34-1) (329-29-3) (329-29-4) (329-8-4) (334-1) (349-3) (382-1) (413-2) (421-4) (435-1) (442-1) (450-6) (450-8) (476-3) (548-5) (552-3-2) (597-2) (597-4) (599-2) (607-4) (611-36) (611-37) (612-1) (673-2) (686-12) (686-20) (686-7) (690-8) (691-10) (691-11) (694-2-19) (699-2) (699-4) (699-6)

(699-7) (715-2) (734-8) (800-2) (807-2) (817-2) (821-12) (821-4) (823-34) (864-1) (905-1) (919-5-10) (920-21) (920-46) (935-1) (945-3) (959-1) (959-2) (959-4)

D.2.8.3 – COMMENT: One commenter raised concerns regarding the scope and sufficiency of the NRC's Draft Supplement to the Final Plant Specific Supplement 38 to the *Generic Environmental Impact Statement for License Renewal of Nuclear Plants for Indian Point Nuclear Generating Units 2 and 3*. The commenter asserted that the NRC had insufficiently responded to its scoping comments, that the draft supplement to the final supplemental environmental impact statement did not sufficiently address the commenter's concerns regarding offsite decontamination and environmental restoration in the event of a nuclear accident, that the NRC failed to clarify whether the Price-Anderson Act ensured funding for these cleanup efforts, and that the NRC failed to clarify which Federal agency would be responsible for these cleanup efforts. The commenter also raised concerns regarding the adequacy of the NRC's analysis of severe accident mitigation alternatives (SAMA), purported to provide new and significant information stemming from the Fukushima nuclear accident relevant to the NRC's SAMA analysis, and requested additional information regarding the NRC's examination of potential aqueous releases following a severe accident.

RESPONSE: These comments are outside the scope of the GEIS and Rule because they do not raise concerns regarding the generic analysis of continued storage in the GEIS. Rather, they raise concerns regarding the sufficiency of a site-specific NEPA analysis for reactor license renewal and the impact of nuclear accidents during reactor operation. For a general discussion of the Price-Anderson Act and its applicability to continued storage, see Sections D.2.35.33 and D.2.49.8 of this appendix. For a discussion of the Fukushima nuclear accident as it relates to continued storage in spent fuel pools, see Sections D.2.52.1 and D.2.52.4 of this appendix. No changes were made to the GEIS or Rule as a result of these comments.

(718-6-1) (718-7-1) (718-6-2) (718-7-2) (718-6-3) (718-7-3)

D.2.9 Comments Concerning the Proposed Action & Purpose and Need

D.2.9.1 – COMMENT: Commenters asserted that the NRC inaccurately framed the purpose and need for the proposed Federal action and, as a result, has not properly evaluated the likely environmental impacts of the proposed action or considered reasonable alternatives and appropriate mitigation measures. These commenters asserted that the correct purpose and need for the proposed action are to meet the NRC's obligations under the AEA; NEPA; *Minnesota v. NRC*; and *New York v. NRC*, in determining whether the NRC will continue licensing or relicensing nuclear power reactors and allow continued operation of currently licensed reactors. Some commenters asserted that *New York v. NRC* ordered the NRC to prepare the GEIS. Some commenters argued that the NRC's statement of purpose and need of the proposed action is too vague to satisfy NEPA's goal of informing the public or allowing meaningful comment. Other commenters asserted that the GEIS and Rule violate NEPA

because they have predetermined that the NRC would continue to license reactors and storage facilities. Some commenters asserted that the GEIS and Rule amount to a licensing action, such that the no-action alternative is not to license.

Some commenters asserted that the NRC's improper statement of purpose and need for the proposed action skewed the NRC's assessment of alternatives to the proposed action. These commenters asserted that the alternatives considered should have included new licensing requirements for continued storage, suspending reactor licensing, shutting down reactors, and other alternatives to reduce the environmental impacts of reactor operation and spent fuel storage until a repository becomes available. These alternatives would also include prohibiting the use of high-burnup fuel, requiring expedited transfer of spent fuel from spent fuel pools to casks, and implementing HOSS. Some commenters argued that the GEIS should have included a cost-benefit analysis that compares continued storage to these alternatives because that analysis would favor ceasing reactor licensing. According to these commenters, the GEIS improperly limits the purpose and need of the proposed action to efficiency or paperwork reduction, and that the selection of alternatives is similarly limited to paperwork.

Some commenters asserted that the NRC would have to return to the scoping phase or reissue the GEIS to correct these deficiencies. One commenter asserted that NRC regulations require the NRC to address the potential environmental impacts of spent fuel storage during operations and after a plant shuts down as well as alternatives to mitigate those potential impacts.

RESPONSE: The NRC disagrees with these comments. These comments have confused the purpose of the GEIS with the purpose of the proposed Federal action. Some comments also confuse the proposed action here with a final licensing decision. As a result, these comments have erroneously concluded that a GEIS that analyzes continued storage impacts is itself a licensing action requiring consideration of alternatives to licensing.

The proposed Federal action is the issuance of a revised 10 CFR 51.23, not preparation of the GEIS (see Section 1.4 of the GEIS). Issuance of the Rule has a purpose distinct from the purpose of the GEIS. Thus, the proposed Federal action is not to perform the substantive analysis of continued storage presented in the GEIS, but rather to issue a revised Rule, 10 CFR 51.23, that codifies the generic impact analysis in the GEIS by regulation, eliminating the "need to separately consider the environmental impacts of continued storage" in future reactor and ISFSI licensing actions (see Section 1.4 of the GEIS). Because the rulemaking—the codification of the GEIS in 10 CFR 51.23—is the proposed Federal action, the purpose and need for the proposed action correctly focus on the rulemaking, not the GEIS. The purpose of the rulemaking is to preserve the efficiency of the NRC's licensing processes with respect to the environmental impacts of continued storage.

The purposes of the GEIS are defined by its scope and usage. In scope, the GEIS generically "assesses the environmental impacts of continued storage" (see Section 1.2 of the GEIS) with

regard to the various resource categories and three timeframe scenarios under stated analytical assumptions (see Section 1.8 of the GEIS). As stated in Section 1.2 of the GEIS, the NRC's generic analysis encompasses all direct, indirect, and cumulative impacts of continued storage, including those issues identified by the Court of Appeals for further analysis in *New York v. NRC*. As a result, the GEIS addresses the full range of impacts required by NEPA and the Court of Appeals' remand. In usage, the GEIS provides a regulatory basis for the NRC's amendment to 10 CFR 51.23 (see Section 1.4 of the GEIS). This generic consideration of continued storage is consistent with the NRC's practice of the past 40 years.

The NRC acknowledges the binding interpretation of NEPA by the Court of Appeals that reliance upon generic findings concerning the environmental impacts of continued storage constitutes a stage in licensing decisions requiring NEPA analysis (*New York v. NRC*). Indeed, the Commission restated its adherence to this principle when it suspended the completion of reactor licensing and relicensing proceedings pending resolution of the Court of Appeals' remand. Calvert Cliffs 3 Nuclear Project, LLC (Calvert Cliffs Nuclear Power Plant, Unit 3), CLI-12-16, 76 NRC 63 (slip op. at 4)("Waste Confidence undergirds certain agency licensing decisions, in particular new reactor licensing and reactor license renewal….[I]n recognition of our duties under the law, we will not issue licenses dependent upon the Waste Confidence Decision or the Temporary Storage Rule until the court's remand is appropriately addressed.") (NRC 2012b).

The stated purpose of the proposed action in Section 1.5 of the GEIS conforms to the decision of the Court of Appeals in *New York v. NRC*. The issue before the Court of Appeals was "whether the [Waste Confidence Decision] itself," not the licensing of a nuclear power reactor, "constitute[d] a major federal action". Thus, the Court of Appeals held that "the rulemaking at issue here constitutes a major federal action". The rulemaking, as the Court of Appeals held, "will be used to enable licensing decisions based on its findings". Therefore, the NRC's reliance upon generic environmental findings in licensing decisions does not equate to a licensing decision. In fact, the findings in 10 CFR 51.23 will constitute only a portion of the environmental analysis and findings by the NRC in licensing actions (e.g., a specific license for a spent fuel storage facility or a combined license for a nuclear power reactor). Accordingly, the purpose and need for the proposed action, as stated in Section 1.5 of the GEIS, are consistent with the Court of Appeals' characterization of the rulemaking in *New York v. NRC* which found the rulemaking at issue to constitute a major Federal action.

Given the stated need for the proposed action—to provide processes for use in NRC licensing to address the environmental impacts of continued storage—alternatives considered under NEPA will necessarily focus on processes that address environmental impacts of continued storage, and specifically, on alternatives to the rulemaking, rather than alternatives to licensing. Given the purpose of the proposed action—to preserve the efficiency of the NRC's licensing processes with respect to the environmental impacts of continued storage—the alternatives

considered in this GEIS (i.e., site-specific environmental review of continued storage, preparation of a GEIS without adopting a rule to codify the GEIS, or reliance upon a policy statement that expresses how the NRC intends to use the GEIS in site-specific licensing) are considered as options the NRC could pursue under the no-action alternative because the proposed action is the only action that preserves the efficiency of NRC's licensing processes (see Section 1.6 of the GEIS). Alternatives suggested by commenters that focus on licensing actions (e.g., cessation of licensing or reactor operations) (Section 1.6.2.1 of the GEIS) or implementing new regulatory requirements (Section 1.6.2.2 of the GEIS), are beyond the scope of the proposed action. The merits of these proposals would have to be evaluated in separate rulemaking proceedings apart from this one. Nonetheless, the NRC acknowledges that certain "alternatives" suggested by commenters have been seriously considered by the NRC in other contexts, and the NRC has responded to those suggestions separately in Sections D.2.14.1 and D.2.50.5 of this appendix.

Contrary to some comments, the NRC's rulemaking here does not predetermine future licensing decisions. Rather, the GEIS analysis of continued storage is limited to the impacts that would result if a power reactor or spent fuel storage facility were licensed. Requirements for reactor licensing under the AEA are set forth in 10 CFR Parts 50 and 52, and license renewal under 10 CFR Part 54. Requirements for independent spent fuel storage facility licensing under the AEA are set forth in 10 CFR Part 72. Every application for a reactor or specific ISFSI license or license renewal is published with a notice of an opportunity to intervene and request a hearing in the licensing proceeding under NRC hearing rules in 10 CFR Part 2, and interested parties who meet NRC standing and contention-admissibility requirements may challenge the applicant's compliance with NRC license application requirements.

Finally, the GEIS and Rule do not and need not address the potential environmental impacts of spent fuel storage during facility operations or after facility shutdown but before the end of the licensed life of the facility. Those impacts and mitigation alternatives will have already been evaluated and considered in licensing the facility. Impacts of storage that occur after the licensed life of the facility, on the other hand, are "continued storage" impacts evaluated by the GEIS and codified by 10 CFR 51.23.

The NRC has made changes to Sections 1.3, 1.4, 1.5, and 1.6 of the GEIS in response to comments to clarify the description of the purpose of the GEIS, proposed action, purpose and need, and alternatives, respectively. In particular, the discussion of the alternatives has been reorganized to clarify the relationship between the Federal action here and the options considered by the Commission in response to COMSECY-12-0016 (NRC 2012c). No changes were made to the Rule as a result of these comments.

(1-13) (1-15) (1-16) (1-18) (1-22) (1-25) (30-17-3) (30-4-6) (34-3) (59-9) (246-7-1) (328-1-5) (328-4-6) (341-2-16) (473-11-1) (473-9-1) (473-11-10) (473-11-11) (473-9-12) (473-11-14) (473-9-14) (473-9-16) (473-9-17) (473-9-18) (473-5-2) (473-11-3) (473-14-3) (473-3-3) (473-5-3)

(473-9-3) (473-9-4) (473-11-5) (473-9-5) (473-11-6) (473-12-6) (473-18-6) (473-9-6) (473-11-7) (473-9-7) (473-11-8) (473-9-8) (473-11-9) (473-9-9) (552-1-9) (556-1-6) (603-11) (669-7) (669-8) (688-10) (688-11) (688-5) (706-2-1) (706-1-11) (706-1-12) (706-1-14) (706-2-16) (706-1-17) (706-2-17) (706-1-18) (706-2-2) (706-1-20) (706-2-3) (706-1-4) (706-1-6) (706-1-7) (706-2-8) (706-2-9) (738-5) (783-1-13) (783-3-15) (783-3-16) (783-1-19) (783-2-23) (783-1-7) (783-3-7) (783-1-8) (820-10) (820-11) (820-14) (836-34) (867-3-19) (897-3-1) (897-3-11) (897-1-12) (897-3-13) (897-3-14) (897-3-15) (897-1-16) (897-3-16) (897-1-17) (897-1-18) (897-7-19) (897-2-2) (897-2-3) (897-3-3) (897-2-4) (897-2-5) (897-3-5) (897-3-6) (897-3-7) (897-3-8) (897-3-9) (930-2-8) (937-1) (937-12) (937-6)

D.2.9.2 – COMMENT: Several commenters disagreed with the stated purpose and need in the GEIS because they do not agree that the NRC should facilitate licensing or focus on efficiency of licensing and reviews. In addition, one commenter stated that the GEIS does not address the deficiencies identified by the Court of Appeals. Another commenter stated that the NRC should be pursuing safety, not efficiency. Two commenters noted that efficiency may benefit industry, but that the GEIS does not provide a real assessment of environmental impacts from continued storage. One commenter stated that the proposed purpose of the GEIS appeared to promote nuclear power and force continued use of nuclear power. Another commenter stated that the GEIS indicates consideration of a change in licensing while avoiding the scrutiny of the licensing process.

RESPONSE: The NRC agrees in part and disagrees in part with these comments. The increased efficiency of this generic approach will enhance the ability of the relevant NRC adjudications to focus on site- or proceeding-specific issues. The resolution of generic issues related to continued storage in a generic proceeding, rather than in site-specific proceedings, will allow the participants in these adjudications, including public interest groups, the nuclear industry, State, local, and Tribal governments, and the NRC, to focus resources on addressing issues raised about a specific site or in a specific proceeding.

The NRC does not agree that the GEIS serves to promote nuclear power or that the agency's preparation of the GEIS for regulatory efficiency comes at the expense of safety. The NRC's mission is to protect public health, safety, and the environment, and this mission remains the agency's sole focus. The NRC does not promote nuclear power. Rather, the NRC's robust regulatory regime, which includes site-specific licensing reviews and ongoing inspection and enforcement programs, ensures that NRC licensees continue to meet the NRC's safety standards. Further, the NRC does not agree that the GEIS forces the continued use of nuclear power. The analysis in the GEIS will be incorporated by the NRC in future licensing actions to satisfy the NRC's NEPA responsibilities to analyze the environmental impacts of continued storage. However, the GEIS does not represent or direct an NRC decision on any pending or future licensing action, nor does it have any effect on the current operation of licensed facilities.

The NRC does not agree that efficiency is an improper purpose for NRC NEPA reviews. The NRC is obligated under NEPA to conduct reviews of all environmental impacts reasonably likely to result from licensing actions. Historically, the NRC has fulfilled its NEPA obligations through generic or site-specific analyses, or some combination of both as appropriate. Where the impacts are susceptible to generic analysis, a GEIS or other document results in substantial benefits, because it analyzes those impacts through a rigorous and transparent public process while avoiding wasteful and repetitive reconsideration of these issues in numerous individual proceedings. For more discussion of NEPA's information requirements see Section D.2.5.15 of this appendix.

Finally, as stated in Section 1.2 of the GEIS, the NRC's generic analysis encompasses all direct, indirect, and cumulative impacts of continued storage, including those issues identified by the Court of Appeals for further analysis in *New York v. NRC*. As a result, the GEIS addresses the full range of impacts required by NEPA and the Court of Appeals' remand. No changes were made to the GEIS or Rule as a result of these comments.

(219-5) (244-6-3) (327-14-2) (660-2) (669-1) (693-4-2) (937-18) (937-5)

D.2.9.3 – COMMENT: One commenter stated their understanding that the purpose of the document is to ensure consistency of licensing in future licensing actions, and asked if the final GEIS will be as soft on facts and science as the draft GEIS.

RESPONSE: The NRC agrees in part and disagrees in part with the comment. The NRC agrees that the GEIS and Rule provide consistency in the licensing process for addressing the environmental impacts of continued storage of spent fuel. However, the NRC disagrees that the GEIS is "soft" on facts and science. As stated in Section 1.8 of the GEIS, the NRC's methodology and approach to evaluating the environmental impacts of continued storage follows the guidance in NUREG–1748, "Environmental Review Guidance for Licensing Actions Associated with NMSS Programs: Final Report," where applicable (NRC 2003a). In accordance with NEPA, the GEIS takes into account available information to analyze the environmental impacts of continued storage of spent fuel for each of the resource areas described in Chapters 4, 5, and 6 of the GEIS. Further, in accordance with NRC and CEQ regulations, the GEIS incorporates, by reference, information from many other sources into the analysis. The NRC invited commenters to submit additional information for consideration in the GEIS during the scoping and draft comment periods, and has addressed those comments in this GEIS. This factual and scientific information, which is the basis for the analysis, is sufficient to make the impact determinations in the GEIS. No changes were made to the GEIS or Rule as a result of this comment.

(881-1)

D.2.9.4 – COMMENT: Two commenters raised issues concerning Section 1.3 of the draft GEIS, which describes the purpose of the GEIS. One commenter disagreed with the statements that the environmental impacts of nuclear power plant operation are well understood, and the environmental impacts of continued storage can be reasonably predicted. The commenter expressed concern that there is excessive confidence in what is known about environmental impacts, and the GEIS applies generic determinations instead of complex site-specific evaluations. The other commenter noted that past site-specific licensing decisions did not have an EIS for long-term impacts of storage, but rather relied on an assumption from the old Waste Confidence Rule that continued storage was safe. The commenter expressed hope that the GEIS would be updated to avoid this flaw.

RESPONSE: The NRC agrees in part and disagrees in part with the comments. The NRC agrees that past site-specific licensing actions did not include an EIS for impacts of continued storage. The NRC is not reconsidering prior licensing decisions as part of this rulemaking. The proposed action is to issue a revised Rule that adopts into regulation the NRC's generic environmental analysis of continued storage. Further, the revision would state that because the impacts of continued storage have been generically assessed in this GEIS and codified in a Rule, the NRC will incorporate the impact determinations from the GEIS into the NEPA reviews for individual licensing actions. The NRC disagrees that the environment around spent fuel storage facilities is not well understood. Each licensed facility undergoes a site-specific licensing process that encompasses an assessment of the environmental conditions and the environmental impacts of operation for that particular site. The response to the concerns about applicability of a generic analysis to site-specific concerns can be found in Section D.2.11.1 of this appendix. The NRC has made changes to Sections 1.3, 1.4, 1.5, and 1.6 of the GEIS in response to comments to clarify the description of the purpose of the GEIS, proposed action, purpose and need, and alternatives, respectively. No changes were made to the Rule as a result of these comments.

(210-4) (783-2-2)

D.2.9.5 – COMMENT: One commenter stated that it is unclear why licensing efficiency is included in the scope of the GEIS if each licensing action is still required to have its own EA or EIS.

RESPONSE: An important distinction exists between different terms in the GEIS and Rule that is clarified here in light of this comment. The scope of the GEIS is defined in Section 1.2 of the GEIS as the analysis of environmental impacts of continued storage. As Section 1.2 further states, that analysis provides a regulatory basis for the revised Rule. Licensing efficiency, on the other hand, is unrelated to the scope of the GEIS. Rather, licensing efficiency is one of the stated purposes of the proposed action described in Section 1.5 of the GEIS, and the proposed action is in turn defined in Section 1.4 of the GEIS as the rulemaking to adopt the revised Rule. Thus, efficiency in licensing is achieved by the generic analysis of continued storage impacts

and the codification of the results of the generic analysis in the revised Rule, but this efficiency is unrelated to the scope of the GEIS.

Although the NRC will be required to perform a site-specific NEPA review for future licensing actions for a power reactor or specifically licensed ISFSI, the use of a GEIS and Rule to generically analyze the impact of continued storage does facilitate efficiency in these licensing proceedings. The GEIS is not intended to resolve all of the environmental impacts associated with site-specific licensing actions. Under NEPA, the NRC must analyze the environmental impacts associated with initial licenses and license renewals for any reactor and specifically licensed ISFSI. Many of the impacts associated with the construction and operation of a facility are analyzed on a site-specific basis. Other environmental impacts that are substantially the same at any site (e.g., the environmental impacts of continued storage) can be generically resolved by the NRC so they do not need to be revisited in each licensing review. This generic analysis produces efficiency in NRC proceedings by resolving the environmental impacts that are expected to be substantially similar at any reactor or specifically licensed ISFSI site. The Rule improves the efficiency of the NRC's proceedings by obviating the need to revisit the same issue in each proceeding. No changes were made to the GEIS or Rule as a result of this comment.

(619-1-7)

D.2.9.6 – COMMENT: Two commenters stated that the purpose of the GEIS should be to address deficiencies that the Court of Appeals identified. One commenter argued that the GEIS should address spent fuel pool leaks and fires and impacts of failure to secure a repository. Another commenter stated that an additional purpose should be to analyze the human environment for impacts of storage of spent fuels after license expiration.

RESPONSE: The NRC agrees with the comments that the purpose of the GEIS includes a response to the Court of Appeals' remand of the Waste Confidence Rule. As stated in Section 1.3 of the GEIS, the purpose of the GEIS is two-fold: (1) to determine the environmental impacts of continued storage, including those impacts identified in the remand by the Court of Appeals in the *New York v. NRC* decision; and (2) to determine whether those impacts can be generically analyzed. The first point addresses the comment's concerns about evaluation of environmental effects of continued storage on the environment, as well as inclusion of spent fuel pool leaks and fires and failure to secure a repository. The analyses of spent fuel pool leaks and fires can be found in Appendices E and F, respectively, and the impacts of indefinite storage can be found throughout Chapters 4 and 5. The GEIS reflects language clarified from the draft GEIS regarding the purpose and need and proposed action. No changes were made to the Rule as a result of these comments.

(219-2) (693-3-11)

D.2.9.7 – COMMENT: Commenters argued that the proposed Federal action goes beyond simply analyzing the environmental impacts of continued storage and codifying that analysis by rule. One commenter asserted that the proposed Rule would also codify the following:

- Generic findings in 10 CFR 51.23 on the feasibility of safe storage and a repository;
- An environmental finding in Table B-1 that spent fuel disposal impacts would not be large enough to require that the option of extended operation under 10 CFR Part 54 should be eliminated; and
- A finding in Table B-1 that the NRC has not assigned a single level of significance for the impacts of spent fuel and HLW disposal.

Commenters also stated that it is inappropriate to describe the proposed Federal action and the alternatives as administrative in nature because the GEIS still must satisfy *Minnesota v. NRC* and "determine whether there is reasonable assurance that an offsite solution [for spent fuel] will be available by the expiration of the plants' operating licenses, and if not, whether there is reasonable assurance that the fuel can be safely stored at the sites beyond those dates." One commenter stated that the NRC's assertion that the GEIS is not a licensing action and is separate from the licensing decisions that it enables are directly contradicted by *New York v. NRC*, and, therefore, that the proposed Federal action cannot be considered administrative in nature.

Commenters also indicated that the alternatives analysis in the GEIS violates NEPA.

First, commenters stated that neither of the two alternatives analyzed would achieve the GEIS's efficiency purpose because without a rule codifying the findings in the GEIS those findings would still be subject to challenge in site-specific proceedings.

Second, commenters argued that the alternatives presented in the GEIS are circular and not true alternatives to the proposed action. One commenter asserted that the no-action alternative is flawed because it does not represent the "environmental status quo," because it has not been the NRC's practice to consider the impacts of continued storage in individual licensing proceedings. The commenter argued that the GEIS both purports to assess alternatives to preparing a generic analysis and presents the results of a generic analysis that had already been prepared. Further, the commenter argued that even in the case of the no-action alternative, the GEIS asserts that a generic analysis would still be prepared, just in another form. Thus, the commenter argued the no-action alternative is not a true no-action alternative because the GEIS assumes that a generic analysis is inevitable.

Finally, commenters argued that the GEIS violates NEPA because the alternatives, as described, are irrelevant to the environmental impacts of the proposed action. Commenters suggested that the GEIS should have assessed whether choosing between a generic or site-

specific environmental analysis could affect the quality and level of analysis in a way that could change decision-making. Commenters also argued that the NRC should have considered different alternatives (e.g., alternate rule texts) that could have resulted in different environmental outcomes.

RESPONSE: The NRC agrees in part and disagrees in part with these comments.

Scope of the Rulemaking

One comment confused the scope of the proposed action—the codification of the conclusions from the GEIS in 10 CFR 51.23—with the scope of the revisions to the CFR that will be included in this rulemaking. As a result of the proposed action to codify the conclusions from the GEIS in 10 CFR 51.23, the NRC will need to make a number of conforming and clarifying changes to other sections in the NRC's regulations, including 10 CFR Part 51, Subpart A, Appendix B—Table B-1 ("Summary of Findings on NEPA Issues for License Renewal of Nuclear Power Plants"). These changes to Table B-1 and other sections in Part 51 simply make appropriate conforming changes to achieve consistency with the revisions to 10 CFR 51.23.

Minnesota v. NRC* and *New York v. NRC

Several comments asserted that the NRC's discussion of the purpose and need for the proposed action, and the associated analysis of alternatives, fails to comport with the court decisions in *Minnesota v. NRC* and *New York v. NRC*. The NRC disagrees with these comments. Insofar as the comments address the history of the Waste Confidence proceeding, including the "findings" structure that the NRC developed in response to *Minnesota v. NRC*, these matters are discussed in detail in Section D.2.4.1 of this appendix. The NRC disagrees with the comments' assertion that the Court of Appeals in *New York v. NRC* found that the Waste Confidence proceeding is itself a licensing action. In that case, the Court of Appeals held that "the [Waste Confidence] rulemaking at issue here constitutes a major federal action" requiring NEPA review (681 F.3d at 476). The current rulemaking to prepare the GEIS and codify its findings corresponds to the Waste Confidence rulemaking determined to be a major Federal action in *New York v. NRC*. Accordingly, the NRC has correctly identified the proposed action in the current rulemaking as the adoption of a Rule codifying the impact determinations of the GEIS, rather than a licensing action, as comments asserted. While the Court of Appeals further held that the Waste Confidence proceeding "is a predetermined 'stage' of each licensing decision" (id.), the Court of Appeals did not equate the Waste Confidence proceeding itself with a licensing action. Nothing the NRC has stated in the current rulemaking proceeding is inconsistent with the conclusion of the Court of Appeals that, like the earlier Waste Confidence Decision and previous 10 CFR 51.23, the GEIS and revised 10 CFR 51.23 similarly constitute a "stage" in licensing. In addition, like the earlier Waste Confidence Decision and Rule, the GEIS and revised Rule fulfill the purpose of and need for an environmental analysis that conclusively satisfies that portion of the NRC's NEPA obligations pertaining to continued storage while

preserving the efficiency inherent in NRC's historical practices. The proposed Federal action in this case—a rulemaking to codify the agency's generic conclusions regarding continued storage impacts—simply provides the same efficiency in NRC's licensing proceedings with respect to the environmental impacts of continued storage achieved earlier by the Waste Confidence Decision and rule, which the Court of Appeals recognized as the "major federal action" requiring NEPA compliance.

No-Action Alternative

The NRC disagrees with the comment that the no-action alternative cannot consider site-specific environmental reviews of continued storage because the "status quo" is a generic consideration of continued storage. This assertion misstates the status quo. The Waste Confidence Decision and rule were vacated by the Court of Appeals in *New York v. NRC*, leaving a procedural gap in NRC's consideration of environmental impacts in licensing actions. Absent a replacement for the vacated 10 CFR 51.23, the NRC would have to choose a different means for considering the environmental impacts of continued storage in connection with individual licensing decisions. However, the NRC recognizes that, in the absence of an existing process for these NEPA reviews, the Commission would be able to choose from several options if it decided not to issue the revised Rule. In fact, the alternatives considered in the GEIS are contained in the options and tracks presented to the Commission in COMSECY-12-0016 (NRC 2012c) and acknowledged by the Commission in CLI-12-16 (NRC 2012b).

The NRC has reorganized Section 1.6 of the GEIS to explain how the available alternatives are, in effect, all options that could be considered in the case of no action (i.e., if the proposed Rule was not adopted). This reorganization better reflects the relationship between the no-action alternative and the alternatives described in the GEIS, which are better understood as different options within the no-action alternative. However, the environmental impacts of these options and the various levels of efficiency they could provide have not changed, and this reorganization does not otherwise affect the NRC's consideration of reasonable alternatives. The reorganization is intended solely to clarify for commenters and the public how the NRC considers these options in relation to the proposed action.

Alternatives Considered in the Draft GEIS

The NRC disagrees with the comments that assert that the alternatives analysis in the draft GEIS violates NEPA because the alternatives would not achieve the same degree of efficiency as the rulemaking (See *Calvert Cliffs' Coordinating Comm., Inc. v. AEC*). However, the NRC agrees that the efficiency gains provided by the alternatives considered in the draft GEIS are different in kind and extent than the efficiencies provided by the Rule; specifically, the alternatives considered in the draft GEIS would not preclude challenge to the environmental impacts from continued storage in adjudicatory proceedings. The NRC has made clarifying changes to Section 1.6 of the GEIS as described above in response to these comments.

These comments point out that the alternatives considered in the draft GEIS would not codify the GEIS by Rule and would therefore allow continual challenges to the environmental conclusions in site-specific proceedings. Nonetheless, because the no-action options would still produce certain advantages in regulatory efficiency and clarity—although not to the same extent as, and without the conclusive effect of, the proposed action—they represent reasonable options that the NRC may pursue if it decides not to implement the proposed action. These options would, to a lesser degree than the proposed action, fill some of the gaps left by the vacated 10 CFR 51.23 by providing a means for the decisionmaker in NRC licensing proceedings to consider the environmental impacts of continued storage. In addition, under any of these options, the NRC and the participants in NRC proceedings would gain a better understanding of these generic issues over time, likely reducing duplicative litigation of these generic issues.

As explained in Section 1.6.1.1 of the GEIS, even in the event that the NRC chose to satisfy its NEPA obligations through site-specific reviews, the nature of the issues related to the environmental impacts of continued storage is sufficiently generic that after a few initial, complete site-specific analyses, future EISs would likely incorporate those analyses with only minor variations. That is the normal course for an agency (e.g., the NRC) in identifying environmental impacts that do not vary significantly from site to site and are not addressed by a generic analysis (e.g., a GEIS). Even where an agency makes a policy decision not to evaluate impacts through a single generic review, NEPA does not require the agency to expend resources reanalyzing issues once they have proven to be generic in nature.

Finally, by proposing to codify the conclusions from the GEIS in 10 CFR 51.23, the NRC has provided members of the public with an opportunity to challenge the generic conclusions during this proceeding. This allows the agency to take immediate advantage of the issues and information presented and to gain additional efficiency, instead of waiting to explore the generic issues through individual NRC licensing proceedings.

Consideration of Reasonable Alternatives

The NRC disagrees that the alternatives are invalid because the environmental impacts of the alternatives are the same. The alternatives considered in an EIS, including the no-action alternative, allow agencies to consider the full array of options for achieving the agencies' goals and the potential environmental impacts of those options. In the case of the proposed action, a procedural rulemaking to determine the environmental impacts of continued storage, the full array of options includes the proposed action and site-specific reviews for each licensing action. Because the proposed action serves an administrative purpose and need, it necessarily follows that the other reasonable options to serve that need would also be administrative in nature and have similarly insignificant environmental impacts. While the environmental and financial costs of the options vary, see Chapter 7 of the GEIS, none of the reasonable options to serve the NRC's purpose and need has environmental impacts greater than SMALL (i.e., environmental

effects are not detectable or are so minor that they will neither destabilize nor noticeably alter any important attribute of the resource). Thus, the NRC has concluded that none of the reasonable options for meeting the purpose and need for the proposed action has significantly greater or smaller environmental impacts than the others.

The NRC also disagrees with comments asserting that the NRC's alternatives analysis should have considered whether different methods of review could have affected the quality of the analysis. The quality of the NRC's environmental analysis of continued storage is not dependent on whether the NRC prepares a site-specific or generic analysis. Whatever method an agency chooses to examine environmental impacts, its analysis must satisfy NEPA's "hard-look" requirement. In this proceeding, the NRC took the required hard look when it reviewed the environmental impacts of continued storage and, because the impacts were found to be sufficiently common across the sites to which the analysis would apply, determined that the impacts could be assessed generically in a GEIS. Moreover, in conducting this generic analysis, the NRC employed assumptions that are sufficiently conservative to bound the impacts such that any variances that may occur from site to site are unlikely to result in environmental impact determinations that are greater than those presented in the GEIS. As a result, the NRC's analysis in the GEIS rigorously addresses the environmental impacts of continued storage while it avoids replication of approximately the same analysis for each site. The NRC has made changes in Section 1.6 of GEIS to clarify the relationship between the alternatives discussed in the GEIS and the Federal action. No changes were made to the Rule as a result of these comments.

(473-1-10) (473-1-11) (473-1-3) (473-1-9) (706-1-19) (706-2-20) (706-2-4) (706-2-5) (706-2-6) (897-3-2) (897-3-4) (897-1-8)

D.2.9.8 – COMMENT: The NRC received several comments related to NEPA segmentation and a comprehensive review of spent fuel issues, including an update to NUREG–0575, *Final Generic EIS on Handling and Storage of Spent Light Water Power Reactor Fuel* (NRC 1979).

Several commenters argued that the NRC has segmented the NEPA analysis of spent fuel management among several separate documents. Commenters argued that the GEIS and Rule improperly segment the NRC's environmental analysis of spent fuel issues by, for example, improperly relying on Table S-3.

Commenters argued that the NRC should review the environmental impacts of spent fuel storage, both during and after operations, along with the impacts of spent fuel disposal and mitigation alternatives, to provide a complete picture of the environmental impacts of spent fuel management. One commenter asserted that because the NRC has failed to do so, the NRC has allowed inconsistencies between the various analyses to persist. Commenters submitted a petition for rulemaking requesting that the NRC conduct a comprehensive review and update of its environmental studies and regulations and incorporate its update into a new regulatory

framework. Commenters also drew the NRC's attention to NUREG–0575 (NRC 1979), which they consider to be a legally sufficient, albeit outdated, NEPA document.

RESPONSE: The NRC disagrees with the comments.

Segmentation

The NRC has not segmented the NEPA analysis of continued spent fuel storage from its overall reactor and ISFSI licensing analyses, nor has the NRC segmented the environmental analysis of continued storage itself. Under CEQ regulations, segmentation refers to instances where a Federal agency splits a project into smaller components to avoid the NEPA requirement to prepare an EIS for the project, or where an agency does not consider related actions in a single EIS (40 CFR 1508.25). Here, the NRC has prepared an EIS to provide a complete analysis of the generic impacts of continued storage, an approach that improves the efficiency of environmental reviews by generically resolving issues that are not substantially different from one proceeding to another, while still ensuring those impacts are considered in subsequent licensing actions. The Supreme Court has explicitly approved NRC's methodology in generically analyzing one aspect of reactor licensing impacts that can be used for all reactor licensing proceedings, which is the same approach employed here in the GEIS for analyzing the impacts of continued storage (see *Baltimore Gas & Elec. Co. v. NRDC*).

For a given future licensing action that relies on the GEIS and Rule, the NRC will prepare a NEPA analysis that will incorporate the environmental impacts presented in the GEIS into the overall licensing decision. The NRC's NEPA review for each individual licensing action will thus fully account for the reasonably foreseeable impacts of that action, including, where applicable, the impacts from continued storage that have been analyzed generically in the GEIS. The NRC has updated the relevant paragraph of the final Rule to clarify how the NRC will consider the generic analysis in this GEIS as part of future licensing actions.

The NRC disagrees with comments asserting that the NRC's current practices improperly divide environmental reviews into separate rulemakings like Table S-3, Table B-1, and this proceeding, and that these practices result in in inconsistencies and incomplete analyses. The NRC notes that Table S-3 and the approach taken by the NRC in using Table S-3 data in licensing proceedings were approved by the Supreme Court in *Baltimore Gas & Elec. Co. v. NRDC*. The current continued storage proceeding merely continues the NRC's historic, judicially approved practice of generically addressing spent fuel storage impacts. The NRC is aware of differences between this Continued Storage GEIS and other NRC generic environmental reviews (see Section D.2.11.10 of this appendix). However, to the extent that comments assert than any differences may represent inconsistencies, the comments have not explained how those inconsistencies make the GEIS insufficient to satisfy the NRC's NEPA obligations to determine the environmental impacts of continued Storage. Further, comments on any NRC review outside of continued storage are beyond the scope of this proceeding.

Comprehensive Review and NUREG–0575

The NRC disagrees with the assertion that a broader analysis of spent fuel storage and mitigation alternatives to include storage during licensed life of a reactor is required in this proceeding. The GEIS and proposed revisions to the Rule relate exclusively to continued storage. Because this proceeding concerns only the impacts of continued storage, and those impacts are comprehensively examined in the GEIS, the GEIS suffices for its purpose. Prior to making a decision on a site-specific license application, the NRC will incorporate the impact determinations from the GEIS into the NEPA reviews for individual licensing actions.

In particular, some comments argued that the NRC should have prepared an update to or modeled this comprehensive analysis on NUREG–0575 (NRC 1979), an earlier EIS that provided a higher-level analysis of the environmental impacts of the handling and storage of spent fuel. The GEIS is a stand-alone document that, while referencing numerous supporting authorities, includes all information necessary for the NRC to generically evaluate the environmental impacts of continued storage. Accordingly, the NRC is not required to update or revise NUREG–0575 (NRC 1979) (or otherwise undertake a comprehensive review of licensed life spent fuel storage impacts that occur during the licensed life of a facility) in the GEIS.

The NRC has also docketed, as PRM-51-30, a petition for rulemaking, which was submitted with the comments, that requests a comprehensive analysis of spent fuel storage and new regulatory framework (NRC 2014b). The issues associated with the petition are not considered in this GEIS.

The NRC has not prepared a separate safety decision or safety finding for the GEIS or Rule, but the issues related to the safety decision are discussed in the *Federal Register* Notice. For more information on how the NRC addresses *Minnesota v. NRC*, the case that prompted the reasonable assurance findings, see Section D.2.4.1 of this appendix. No changes were made to the GEIS as a result of these comments.

(473-9-13) (679-1) (897-1-13) (897-1-20)

D.2.9.9 – COMMENT: Several commenters expressed general agreement with the proposed action in the GEIS. Two commenters expressed support for addressing Waste Confidence generically through rulemaking, rather than on a site-specific basis, to increase efficiency and limit budgetary expenditures. One commenter noted that the proposed action and amendment to the Rule adequately incorporate the issues identified by the Court of Appeals.

RESPONSE: The NRC acknowledges the comments in support of the proposed action. No changes were made to the GEIS or Rule as a result of these comments.

(327-31-4) (685-6) (783-3-19) (827-1-8) (942-3)

D.2.10 Comments Concerning Alternatives – General

D.2.10.1 – COMMENT: Several commenters expressed that the choice of alternatives in the GEIS was inadequate because the stated alternatives do not allow an adequate comparison of environmental consequences of continued storage, or include ways to substantially mitigate the potential adverse effects of continued storage. Some commenters asserted that the inclusion of other alternatives (e.g., cessation of licensing) must be considered in the absence of a repository, and that doing so would present a different picture of the environmental consequences. Other commenters stated that impacts of storage of additional spent fuel, if generated, could be mitigated by alternatives such as requiring dry cask storage after five years, which would substantially reduce accident risks.

One commenter noted two concerns with the NRC's scoping decision: (1) exclusion of the existence of viable mitigation alternatives and (2) that exclusion of those mitigation alternatives implies that they should be considered and evaluated as part of a site-specific EIS. The commenter stated that during scoping, the commenter requested an analysis of SAMA for continued storage at the Indian Point Energy Center, which would identify site-specific environmental impacts and potential alternatives to mitigate those impacts. The commenter cited *NRDC v. NRC*, to point out that the Court of Appeals rejected NRC's reliance on a GEIS as legally insufficient because in that instance a GEIS did not consider alternatives and special hazards to the public health, safety, and welfare which are vital to any impact statement. The commenter went on to say that this GEIS will also be legally insufficient unless it fully considers all alternatives to the long-term use of spent fuel pools.

Similarly, another commenter stated that the selection of alternatives and appropriate mitigation opportunities for adverse environmental consequences is one of the hallmarks of NEPA, and this requirement allows decisionmakers to confront and publicly evaluate adverse impacts of the final agency action rather than confirming or insulating previous agency choices. The commenter stated that the NRC is obligated to consider mitigation measures as part of the NEPA review, per the Commission's regulation at 10 CFR 51.103(a)(4). The commenter stated that (1) NRC is obligated to take all practicable measures to minimize environmental harm from the alternative selected or otherwise provide an explanation and (2) ensure that a legally sufficient analysis of spent fuel pool SAMA has been completed.

One commenter noted that the GEIS includes a statement that cessation of licensing may lead to environmental impacts from development of required alternate energy sources, but does not state what those consequences might be. Another commenter stated that a discussion should be included about how waste from high-burnup fuel affects consequences during the various phases of reactor life, storage, and decommissioning. Finally, one commenter stated that the NRC must consider how to mitigate the environmental impact of there being no solution to the storage of waste.

RESPONSE: The NRC disagrees with the comments that an analysis of mitigation measures and SAMA should have been considered as part of the NEPA review. The GEIS provides a generic analysis of the environmental impacts of the continued storage of spent fuel, and the proposed action and options under the no-action alternative (the site-specific review, GEIS-only, and policy-statement options) include various ways the NRC could use a generic assessment of environmental impacts of continued storage of spent fuel in its licensing actions. The GEIS does, however, discuss mitigation related to aging, damaged, or degraded fuel. See Section D.2.17.4 of this appendix and Section 2.2.2.1 of the GEIS for additional information regarding this issue. Any determinations by the NRC about whether to require mitigation measures of any type will occur on a site-specific basis during facility licensing or during the course of ongoing NRC oversight.

The comments also raise concerns about requirements for SAMA, which are addressed in Section D.2.35.3 of this appendix and alternate storage requirements (e.g., spent fuel pool thinning, expedited transfer, and safety-grade spray systems), which are addressed in Section D.2.14.2 of this appendix. The NRC considered and eliminated cessation of licensing as an alternative (see GEIS Section 1.6) and responses to comments about cessation of licensing as an alternative are found in Sections D.2.14.8 and D.2.14.5 of this appendix. Further, the concerns in the comments with regard to generic consideration of issues rather than on a site-specific basis are addressed in Section D.2.11.1 of this appendix. No changes were made to the GEIS or Rule as a result of these comments.

(1-11) (1-12) (1-23) (328-4-8) (465-7) (669-17) (669-9) (688-16) (688-17) (718-2-16) (718-1-9) (867-1-4) (937-16)

D.2.10.2 – COMMENT: One commenter stated that NRC must thoroughly review the environmental impacts of onsite storage and consider safer alternatives to nuclear during licensing decisions.

RESPONSE: The NRC agrees with the comment. To fulfill its obligations under NEPA, the NRC considers environmental impacts of onsite storage at a nuclear power plant or spent fuel storage site for the licensed term as part of the facility's licensing review. This GEIS considers the environmental impacts of onsite storage during the continued storage period after the licensed life for operations and before disposal in a repository. Alternatives to nuclear power production are considered in the NEPA analyses supporting licensing decisions for nuclear power plants. Safety of nuclear power plants is also considered in licensing decisions. No changes were made to the GEIS or Rule as a result of this comment.

(143-2) (718-3-7)

D.2.10.3 – COMMENT: Several commenters stated that the GEIS must consider a reasonable range of feasible alternatives to adequately review the possible set of risks and environmental

impacts of spent fuel storage and satisfy NEPA. Two commenters stated that the GEIS should consider all reactor sites and site-specific risks in its analysis. Another commenter stated that it is unwise to do a generic analysis, that this particular analysis cannot be done in the posited 24-month timeframe, and that the GEIS must address the original agency action that caused the production of spent fuel: licensing nuclear reactors. One commenter stated that because of the assumptions relied on in the GEIS, the NRC did not analyze realistic alternatives or realistic future conditions or their environmental consequences. Finally, one commenter stated that the GEIS must posit an alternative that is feasible; economically, politically, and ethically viable; and that protects people and the environment.

RESPONSE: The NRC disagrees with the comments that the GEIS does not reflect an adequate range of alternatives to address the purpose and need and assess the environmental impacts of continued storage. The proposed action is to issue a revised Rule that adopts into regulation the NRC's generic environmental conclusions for continued storage of spent fuel. Section 1.5 of the GEIS states that the purpose of the proposed action is to preserve the efficiency of the NRC's licensing processes, and the need for the proposed action is to provide processes for use in NRC licensing to address the environmental impacts of continued storage. Therefore, for this rulemaking, the proposed action and options under the no-action alternative to the proposed action concern how and whether a generic analysis is used in site-specific licensing reviews, rather than methods of continued storage. Continued storage may occur no matter which alternative the NRC selects in this proceeding, and the environmental impacts from continued storage do not vary among the proposed action, a rulemaking, and the NRC's potential options in the absence of this rulemaking. Moreover, because the proposed action serves an administrative purpose and need, it necessarily follows that the NRC's options to serve that need would also be administrative in nature and have similarly insignificant environmental impacts.

The NRC addressed a number of the concerns raised in these comments elsewhere in this document. The NRC believes that the 24-month timeframe is adequate to complete a comprehensive GEIS and Rule update (see Section D.2.2.7 of this appendix). Comments regarding the production of spent fuel (initial reactor licensing and reactor license renewal) as the reason for this rulemaking are addressed in Sections D.2.9.1 and D.2.14.5 of this appendix. The concerns raised in the comments about inclusion of site-specific information in a generic analysis are addressed in Section D.2.11.1 of this appendix. The concern about the need to include costs of continued storage is addressed in Section D.2.42 of this appendix. No changes were made to the GEIS or Rule as a result of these comments.

(222-8) (603-6) (604-13) (867-3-23) (937-20)

D.2.10.4 – COMMENT: One commenter provided suggestions for additional alternatives that the commenter claims should be evaluated in the GEIS. The proposed alternatives are based on the commenter's consideration of factors that the commenter claims affect the environmental

impacts of future licensing actions that would authorize continued production and surface storage of spent fuel for extended periods, including over the indefinite timeframe. These factors include relevant timescales, alternative storage modes and configurations, the safety-relevant classes of spent fuel requiring continued storage, storage cask technology options, and reliance on versus erosion of institutional controls over time. Based on evaluation of variants of these factors, the commenter formulated four unique alternatives (in addition to a no-action alternative). The unique alternatives included license extension only, near-term nuclear growth, constant nuclear market share scenario, and major nuclear growth.

RESPONSE: The NRC disagrees with the comments that the GEIS should consider the suggested alternatives. The proposed action is to issue a revised Rule that adopts into regulation the NRC's generic environmental analysis of continued storage of spent fuel. Section 1.5 of the GEIS states that the purpose of the proposed action is to preserve the efficiency of the NRC's licensing processes, and the need for the proposed action is to provide processes for use in NRC licensing to address the environmental impacts of continued storage. Therefore, the proposed action and options under the no-action alternative (the site-specific review, GEIS-only, and policy-statement options) include various ways the NRC could use a generic assessment of environmental impacts of continued storage of spent fuel in its licensing actions rather than in terms of timescales of spent fuel production, alternative storage modes and configurations, the safety-relevant classes of spent fuel requiring continued storage, storage cask technology options, or other factors suggested in the comments. Continued storage may occur no matter which alternative the NRC selects in this proceeding, and the environmental impacts from continued storage do not vary among the proposed action, a rulemaking, and the NRC's potential options in the absence of this rulemaking. Moreover, because the proposed action serves an administrative purpose and need, it necessarily follows that the other options to serve that need would also be administrative in nature and have similarly insignificant environmental impacts.

The comments also raise the issue of consideration of loss of institutional controls. Comments on this topic are addressed in Section D.2.19 of this appendix. No changes were made to the GEIS or Rule as a result of this comment.

(706-2-10) (706-2-12) (706-2-13) (706-2-14) (706-2-15)

D.2.10.5 – COMMENT: One commenter stated that before Waste Confidence can be assured, there needs to be a full EIS of any waste storage alternative (e.g., interim storage sites and transportation).

RESPONSE: The NRC agrees in part and disagrees in part with the comment. The NRC agrees that prior to the completion of an individual licensing action, including interim storage facilities, the NRC will conduct a site-specific environmental review and document the results of this review in an EA and FONSI or an EIS. However, the NRC disagrees that the environmental

impacts of continued storage of spent fuel cannot be assessed without a full EIS for every storage site, including interim storage sites. The GEIS generically addresses the environmental impacts of continued storage and would be used in site-specific reviews. Alternatives to spent fuel storage or alternate methods of spent fuel storage are considered as appropriate in site-specific reviews. No changes were made to the GEIS or Rule as a result of this comment.

(938-15)

D.2.10.6 – COMMENT: One commenter agreed with the three alternatives put forth in the GEIS. Two commenters stated overall agreement with the GEIS's proposed action, alternatives, and elimination of consideration of two alternatives (i.e., cessation of reactor licensing and imposition of additional requirements). One commenter agreed with the definition of the proposed action, which is promulgation of a Rule that generically addresses the environmental impacts of continued storage of spent fuel. Another commenter stated agreement that the GEIS does not need to discuss alternatives deemed remote and speculative and that viable alternatives must meet the purpose and need and proposed action. This commenter also stated agreement that the Rule would not have any "cumulative effect" and is not a licensing action, and that the environmental effects will not differ whether evaluated generically or in site-specific reviews.

RESPONSE: The NRC acknowledges the comments in agreement with the proposed action, alternatives, and elimination of some of the alternatives from consideration. However, in response to other comments, the NRC has made changes to sections 1.3, 1.4, 1.5, and 1.6 to clarify the description of the purpose of the GEIS, proposed action, purpose and need, and alternatives, respectively. No changes were made to the Rule as a result of these comments.

(30-16-1) (30-16-5) (827-1-5) (827-5-7) (827-1-9)

D.2.10.7 – COMMENT: One commenter asserted that the GEIS proposes indefinite aboveground storage, and has therefore abandoned geologic storage, which should have been treated as an alternative and analyzed. The commenter states that the failure to treat geologic disposal as an alternative shows that there is no safe way to manage spent fuel.

RESPONSE: The NRC disagrees with the comment. Disposal of spent fuel in a geologic repository remains the national policy, and feasibility of a repository is discussed in Appendix B of the GEIS. In accordance with the NWPA and recent court decisions, the NRC is continuing its evaluation of the DOE's license application for a disposal facility at Yucca Mountain. Because the purpose of the proposed action is to preserve the efficiency of the NRC's licensing processes, and the need for the proposed action is to provide processes for use in NRC licensing to address the environmental impacts of continued storage, spent fuel disposal is outside the scope of this analysis. The proposed action and options under the no-action alternative (the site-specific review, GEIS-only, and policy-statement options) include various

ways the NRC could use a generic assessment of environmental impacts of continued storage in its licensing actions. The comment's concerns regarding safe storage of spent fuel are addressed in detail in Section D.2.38 of this appendix. No changes were made to the GEIS or Rule as a result of this comment.

(329-25-3)

D.2.10.8 – COMMENT: One commenter stated that because the GEIS considers timeframes that extend far into the future, it should include an alternative that does not include a binding Rule, because a binding Rule could limit future public participation. The commenter also recommended that the purpose and need should be expanded to give equal importance to facilitation of public involvement in future decisions.

RESPONSE: The NRC agrees in part and disagrees in part with the comment. The NRC agrees that public involvement is important in licensing decisions and that the analysis should consider an alternative, or in this case, an option under the no-action alternative, that does not include a binding Rule. The GEIS-only option under the no-action alternative, described in Section 1.6.1.2 of the GEIS, and the policy-statement option, described in Section 1.6.1.3 of the GEIS, do not include a binding Rule. These options under the no-action alternative were not selected because they would reduce the efficiencies that NRC would gain through a binding Rule, resulting in considerable expenditure of public, NRC, and applicant resources. However, the NRC disagrees that future licensing decisions will not include appropriate opportunities for public participation. The NRC's detailed response to concerns regarding public participation in future licensing proceedings can be found in Sections D.2.4.7 and D.2.11.2 of this appendix. No changes were made to the GEIS or Rule as a result of these comments.

(669-16) (669-6)

D.2.10.9 – COMMENT: One commenter reasserted issues raised during the scoping period in a letter (Fettus et al. 2012) sent to NRC Chairman Allison Macfarlane shortly after the issuance of the GEIS scoping notice. The commenter stated that the NRC scoping for the draft GEIS lacked sufficient detail to generate meaningful public input on the proposed action and alternatives and that the scoping notice failed to meet NRC requirements by not providing a description of the proposed action and possible alternatives. The commenter further stated that the lack of information in the scoping notice was misleading to commenters who could view the action as a generic analysis of methods for storage, and that the truncated scope of alternatives fails to address the underlying action, which is reactor licensing. The comment also asserts that the scoping notice failed to comply with NRC requirements in 10 CFR 51.27(a)2.

RESPONSE: The NRC disagrees with the comment. NRC Chairman Macfarlane responded on behalf of the Commission to the letter referenced in the comment (NRC 2012d). As noted in the response letter, the scoping notice (77 FR 65137) describes that the action being proposed and

the Federal action under consideration, is an update to the Waste Confidence Rule. The scoping notice requested public comment on the scope of an EIS that would analyze the generic environmental impacts of continued storage to support the update to the Waste Confidence Rule. The scoping notice description provided sufficient information to generate meaningful public input on the proposed action and for commenters to suggest alternatives. As the Chairman noted in the response letter, the Waste Confidence Rule does not authorize the initial or continued operation of any nuclear power plant, and it does not authorize storage of spent fuel. A separate NRC safety and environmental review is required before a reactor is licensed and before fuel can be stored after the expiration of a reactor's license at a specific site.

Regarding whether the scoping notice complied with NRC requirements in 10 CFR 51.27(a)2, the response letter noted that the NRC did not base the scoping notice for this GEIS on 10 CFR 51.27. The requirements in 10 CFR 51.27 regarding the content of scoping notices apply only to scoping notices prepared under 10 CFR 51.26 (i.e., when NRC determines that an EIS should be prepared). In this case, the NRC did not determine that an EIS should be prepared; instead, the Commission exercised its discretionary authority under 10 CFR 51.20(a)(2) to direct the NRC to prepare an EIS to support an update to the Waste Confidence Rule. Nonetheless, the notice described that the action being proposed as an update of the Waste Confidence Rule, which provides sufficient information for commenters to suggest alternatives. No changes were made to GEIS or Rule as a result of this comment.

(706-1-3)

D.2.10.10 – COMMENT: One commenter requested that NRC convene a panel of scientific and engineering experts, non-governmental organizations, and concerned members of the public to discuss permanent and safe storage options for nuclear waste.

RESPONSE: The NRC disagrees with the comment. The GEIS provides a generic analysis of the environmental impacts from the continued storage of spent fuel, and the proposed action and options under the no-action alternative (the site-specific review, GEIS-only, and policy-statement options) include various ways the NRC could use a generic assessment of environmental impacts of continued storage in its licensing actions. Therefore, convening a panel of experts to discuss alternatives to spent fuel storage is outside the scope of this analysis. Responses to comments with concerns about the safe storage of fuel are found in Section D.2.38 of this appendix. No changes were made to the GEIS or Rule as a result of this comment.

(177-4)

D.2.10.11 – COMMENT: One commenter stated that nuclear power plants were not originally designed to host unlimited quantities of spent fuel, but rather that the spent fuel would be reprocessed and therefore the problem has become continuation of production of spent fuel.

RESPONSE: The NRC agrees in part and disagrees in part with the comment. The NRC agrees that fuel storage facilities were not originally designed to host unlimited quantities of spent fuel. The amount of fuel that can be stored onsite at any fuel storage location is considered in site-specific licenses. Irrespective of whether fuel was originally intended to be reprocessed, the NRC disagrees that because disposal or reprocessing is not currently available, that production of spent fuel should cease. Comments addressing cessation of nuclear power production are addressed in Section D.2.14.5 of this appendix. No changes were made to the GEIS or Rule as a result of this comment.

(867-1-17)

D.2.10.12 – COMMENT: One commenter stated that use of the Waste Isolation Pilot Plant should have been considered as an alternative in the GEIS. The commenter provided information about Waste Isolation Pilot Plant and noted that because it is already in use as a storage site for transuranic wastes, some of the barriers to its use as a geologic repository may not be present. The commenter asserted that the use of Waste Isolation Pilot Plant as an alternative would have required site-specific considerations, but its already well-known characteristics would have facilitated the analysis. The commenter stated that the assumptions in the GEIS preclude the use of such an alternative, as well as a purpose and need study, but that a geological storage alternative should have been included.

RESPONSE: The NRC disagrees with the comments. The GEIS provides a generic analysis of the environmental impacts from the continued storage of spent fuel, and the proposed action is to issue a revised Rule that adopts into regulation the NRC's generic environmental conclusions for continued storage. The options under the no-action alternative to the proposed action, as discussed in Section 1.6 of the GEIS, include other ways the NRC could address the environmental impacts of continued storage in its licensing actions, although they do not satisfy the purpose for the proposed action. Therefore, alternatives to spent fuel storage (e.g., disposal in a site such as the Waste Isolation Pilot Plant) are not considered in this analysis. No changes were made to the GEIS or Rule as a result of these comments.

(867-1-15) (867-1-21) (867-3-28)

D.2.10.13 – COMMENT: One commenter stated that the spent fuel storage issue should be made a military issue and nationalized.

RESPONSE: The NRC disagrees with the comment. Under the AEA and the Energy Reorganization Act of 1974, the NRC has the authority to regulate civilian use of radioactive materials, which includes storage of spent fuel. Changes to national laws regarding regulatory authority are outside the scope of the GEIS and Rule. No changes were made to the GEIS or Rule as a result of this comment.

(328-16-3)

D.2.10.14 – COMMENT: One commenter suggested that the GEIS consider the benefits of a kind of bacteria or fungus discovered in the reactor buildings at the Fukushima Dai-ichi nuclear power plant. The commenter suggested that Japan and others dealing with the aftermath of the accident consider whether the bacteria or fungus might eat spent fuel.

RESPONSE: The NRC disagrees with the comment. The proposed action and options under the no-action alternative (the site-specific review, GEIS-only, and policy-statement options) include various ways the NRC could use a generic assessment of environmental impacts of continued storage in its licensing actions. Alternative strategies for storing or disposing of spent fuel, including using bacteria or fungus to consume spent fuel, are outside the scope of this GEIS and Rule. Mitigation strategies for the consequences of the Fukushima Dai-ichi accident are also outside the scope of this GEIS and Rule, as explained in Section D.2.52 of this appendix. No changes were made to the GEIS or Rule as a result of these comments.

(244-13-7) (329-24-2)

D.2.11 Comments Concerning Alternatives – No Action/Site-Specific

D.2.11.1 – COMMENT: Numerous commenters expressed concern regarding the NRC's use of a generic analysis in the GEIS. These commenters requested that site-specific reviews be done instead, or that the EIS be re-written to include site-specific data. Many of these comments noted a site or site-specific issue of concern, such as earthquakes; proximity to coastal locations or waterways; proximity to sensitive, unique, or important ecosystems and protected areas; proximity to fisheries; differences among plant and dry cask storage designs; population density concerns, such as transportation and evacuation routes; or construction activities contributing to erosion at plants located near the coast. Some comments also expressed concern that the GEIS would preclude site-specific evaluation of spent fuel storage. One commenter expressed concerns about potential required modifications to existing power plant infrastructure, such as construction of large structures, and the related impact on cask storage space. Several commenters noted that the NRC treats all sites alike, without differentiating between sites with different physical characteristics. Other commenters noted concerns with cumulative effects, including proximity to DOE sites, which the commenters believe should be considered on a site-by-site basis. One commenter stated that the generic analysis does not adequately address concerns in *New York v. NRC* regarding future dangers and key consequences. One commenter argued that supplemental EISs will be required for each site.

RESPONSE: The NRC disagrees with the comments. The NRC has determined in the GEIS that the direct and indirect environmental impacts of continued storage at reactors can be analyzed generically. This means that, for each of the resource areas analyzed in the GEIS, the NRC has reached a generic determination (i.e., SMALL, MODERATE, LARGE, or a range), that is appropriate for all sites. These impact determinations are not expected to differ from those that would result from individual site-specific reviews for the continued storage period. The

NRC has codified these generic impacts in the revised Rule. Under the revised Rule, the NRC will incorporate the impact determinations from the GEIS into the NEPA reviews for individual licensing decisions. These generic determinations need not be revisited at the time of a specific license application. However, the NRC's regulations at 10 CFR 2.335 allow participants in NRC proceedings to request that a rule, including 10 CFR 51.23, not be applied, or be waived, in a particular proceeding because special circumstances are present that would prevent the application of the rule from satisfying the purpose of the rule. More information about the waiver process is discussed in Section D.2.4.7.

It is important to note that the GEIS satisfies a portion of the NRC's NEPA obligations related to the issuance of a reactor or spent fuel storage facility license by generically evaluating the environmental impacts of continued storage. Prior to the completion of a licensing action, the NRC will conduct a site-specific environmental review and document the results of this review in an EA/FONSI or EIS. The site-specific environmental review will address, among other things, the environmental impacts of spent fuel storage during the license term. The findings of the site-specific environmental review may be challenged by a petitioner during the initial licensing of a facility and at license renewal. Taken together, the GEIS and the site-specific environmental review will provide the decisionmaker in a licensing proceeding with a complete environmental analysis of the impacts associated with spent fuel storage prior to disposal in a geologic repository.

The NRC's evaluation of the environmental impacts of continued storage builds upon substantial operating experience over the licensed life of the reactor. As mentioned above, the environmental impacts associated with spent fuel storage during the licensed life for operation are addressed during the NRC's review of license applications and license renewal applications. These analyses capture the characteristics that most obviously vary from site to site, such as seismic activity, land use, ecosystem, and local population variations. In these site-specific licensing reviews, the NRC will consider and, as warranted, implement site-specific mitigation of impacts. During operation, facility operators, and the NRC gain significant additional experience with site-specific issues, including those related to issues of site configuration and maintenance history. During the licensed life of a facility, many factors ensure that operational impacts, including those from accidents or off-normal releases, are within regulatory limits at any given site. These factors include the plant's operating experience, licensee compliance with NRC regulations, site-specific mitigation and controls informed by the licensing reviews, and ongoing regulatory oversight and enforcement actions.

During the continued storage period, the environmental impacts related to storage of spent fuel are not expected to vary beyond the range experienced during operations. The continued storage of spent fuel would also not create any new effect on property values beyond what has already been experienced. Changes in the environment during the continued storage periods examined in the GEIS are expected to be gradual and predictable. There are inherent

uncertainties in determining impacts for long-term and indefinite timeframes, and, with respect to some resource areas, those uncertainties could result in impacts that, although unlikely, could be larger than those that are expected at most sites and have therefore been presented as ranges rather than as a single impact level. These uncertainties exist, however, whether the impacts are analyzed generically or on a site-specific basis. Because the impacts of continued storage are not expected to vary significantly across sites, despite variations in site-specific characteristics, a generic analysis is capable of determining and expressing the reasonably foreseeable environmental impacts that may result from continued storage.

In remanding the 2010 Waste Confidence Rule (75 FR 81032) to the NRC for additional analysis, the Court of Appeals continued the long history of Federal courts approving a generic approach to the analysis of the environmental impacts of nuclear power reactor operation. In *New York v. NRC*, the Court of Appeals endorsed the NRC's generic approach, stating that there is "…no reason that a comprehensive general analysis would be insufficient to examine onsite risks that are essentially common to all plants." The NRC believes that a generic approach is appropriate because the GEIS makes impact determinations that apply to all reactors and spent fuel storage sites. The reasonableness of NRC's determinations regarding continued storage is supported by numerous environmental reviews of spent fuel storage. Spent fuel storage during the period of operations has been considered in NRC's site-specific licensing of new reactors, ISFSIs, and license renewal. Further, some comments expressed site-specific concerns about safety at nuclear power plants and of continued storage of spent fuel. The safe operation of nuclear power plants and their spent fuel pools and at-reactor ISFSIs is dealt with on an ongoing basis as a part of the current licenses. As described in Appendix B, Section B.3.3.4 of the GEIS, safety issues and concerns are addressed by the NRC on an ongoing basis at every nuclear power plant and ISFSI. The NRC will continue its regulatory control and oversight of spent fuel storage at both operating and decommissioned reactor sites through both specific and general 10 CFR Part 72 licenses. If the NRC were to find noncompliance with these requirements or otherwise identify a concern with the safe storage of the spent fuel, the NRC would evaluate the issue and take whatever action or change in its regulatory program that is necessary to protect the public health and safety and the environment. While the comments asserted reasons why a generic approach was inappropriate, or why a generic approach should not apply to one or more particular facilities they mentioned, the comments did not justify changing the generic impact determinations in the GEIS. In particular, none of the comments demonstrated that the environmental impacts of spent fuel storage in the period of continued storage would be greater than the impacts during the licensed period of operations, which will be assessed in the site-specific licensing review for each facility.

Additional information about comment concerns regarding accidents can be found in Section D.2.35 of this appendix, and emergency planning concerns are addressed in Section D.2.44.2 of this appendix. Additional information addressing comment concerns regarding spent fuel

pool leaks are addressed in Sections D.2.40.2 and D.2.40.3 of this appendix. No changes were made to the GEIS or Rule as a result of these comments.

(30-12-4) (30-15-5) (30-21-9) (45-11-6) (54-2) (63-1) (63-12) (91-1) (112-13-1) (112-2-1) (112-5-2) (112-13-3) (112-31-5) (112-34-5) (136-13) (136-8) (136-9) (163-40-1) (163-42-1) (163-1-2) (163-20-2) (163-51-2) (163-1-4) (163-22-4) (163-7-4) (163-22-5) (163-2-6) (163-22-6) (174-9) (194-1) (200-2) (203-1) (210-5) (215-1) (218-1) (218-5) (222-1) (230-6) (233-3) (244-8-1) (244-8-3) (244-3-5) (244-14-9) (245-31-1) (245-46-2) (245-10-3) (246-26-3) (246-29-7) (246-2-9) (250-1-1) (250-45-1) (250-69-1) (250-8-1) (250-64-2) (250-7-3) (250-1-4) (250-63-4) (250-51-6) (250-28-7) (255-2) (255-3) (269-1) (277-7) (280-1) (280-12) (284-1) (284-5) (303-13) (303-8) (309-8) (325-11-1) (325-20-1) (325-23-1) (325-25-1) (325-27-2) (325-31-2) (325-8-3) (325-7-6) (325-12-7) (326-28-1) (326-63-1) (326-9-3) (326-15-7) (326-56-7) (326-63-7) (327-11-8) (328-6-1) (328-11-5) (328-7-7) (328-7-8) (329-26-1) (329-36-1) (329-12-2) (329-16-2) (329-26-2) (329-3-2) (329-12-3) (329-14-3) (329-18-3) (329-32-3) (329-23-4) (329-7-4) (329-16-6) (329-3-9) (339-1) (340-2) (348-3) (352-3) (356-1) (358-11) (373-3) (375-1) (377-3-14) (377-1-3) (377-1-6) (377-5-6) (377-5-8) (377-6-8) (419-11) (421-8) (423-3) (431-11) (447-1-8) (447-2-9) (450-1) (451-2) (451-5) (453-1) (454-1) (454-4) (464-4) (465-8) (472-3) (473-13-3) (473-6-3) (473-2-5) (473-15-7) (473-13-9) (531-1-14) (531-1-16) (531-2-24) (531-2-26) (531-1-6) (531-2-6) (540-4) (540-7) (541-1) (541-8) (552-2-15) (552-2-16) (553-2) (553-5) (556-1-10) (556-5-10) (556-1-14) (556-1-16) (556-1-22) (556-1-33) (556-1-34) (558-6) (576-1) (578-2) (585-1) (603-12) (604-11) (604-2) (604-3) (607-2) (611-17) (611-20) (614-1) (614-6) (618-12) (620-7) (622-2-13) (622-4-14) (622-1-15) (622-2-2) (622-1-4) (622-1-5) (622-4-5) (622-3-6) (622-4-8) (632-2) (636-4) (646-18) (649-2) (652-1) (660-1) (660-7) (665-3) (668-1) (684-1) (684-3) (684-5) (686-1) (691-3) (701-13) (701-9) (703-14) (703-9) (710-2) (711-2) (712-4) (716-17) (717-2) (718-1-12) (718-2-13) (718-1-16) (718-1-5) (718-1-6) (718-1-7) (718-1-8) (726-1) (727-1) (728-1) (728-5) (741-2) (757-13) (762-1) (764-3) (767-1) (770-1) (774-11) (774-7) (776-2) (785-2) (789-2) (794-1) (805-2) (805-5) (816-2) (816-3) (821-1) (821-2) (821-8) (823-40) (823-49) (823-51) (823-54) (823-57) (823-58) (826-24) (836-25) (846-2) (860-1) (860-7) (864-2) (866-2) (869-4) (872-8) (887-2) (887-3) (897-6-3) (897-6-4) (897-6-5) (897-6-6) (898-5-11) (898-5-12) (898-5-23) (898-5-5) (898-5-8) (908-1) (918-1) (919-5-2) (919-5-3) (920-11) (920-12) (920-23) (929-8) (929-9) (930-1-18) (933-6) (934-3) (937-10) (937-13) (937-14) (937-23) (938-12) (944-6) (944-8) (947-1) (951-1) (993-2)

D.2.11.2 – COMMENT: Many commenters expressed their concern that the public or interested parties would be precluded from raising issues regarding spent fuel storage in future licensing actions or for existing plants. Some commenters stated that interested parties would be unfairly burdened by having to go through a waiver process, and that new information may not be considered. Two commenters asserted that the Commission is abrogating due process by abandoning the responsibility of allowing the public to participate, and one commenter also stated that a generic determination should be accompanied by very detailed site-specific analyses at every site.

RESPONSE: The NRC disagrees with the comments that adequate opportunity for public participation has not been, or will not be, provided. Under the GEIS and Rule approach the NRC has adopted here, only the environmental impacts of the continued storage period are considered. The GEIS and Rule do not assess the environmental impacts of storage during the licensed life for operation, and members of the public may raise issues pertaining to spent fuel storage during licensed life for operation in site-specific licensing proceedings. Development of this GEIS and Rule has included a robust public comment process throughout the scoping and draft-stage public comment periods during which interested parties have had the ability to raise concerns regarding storage of spent fuel during the continued storage period. The NRC acknowledges the importance of meaningful public participation, and by providing these opportunities both in this process and in site-specific license reviews, the NRC has fulfilled its public participation obligations. Further, the NRC's regulations at 10 CFR 2.335 allow participants in NRC proceedings to request that a rule, including 10 CFR 51.23, not be applied, or be waived, in a particular proceeding because special circumstances are present that would prevent the application of the rule from satisfying the purpose of the rule. For more information on waiver, see discussion in Section D.2.4.7 of this appendix. The NRC disagrees that the generic analysis should be accompanied by a site-specific analysis at every site because to do so would not improve the efficiency of the NRC's licensing process. No changes were made to the GEIS or Rule as a result of these comments.

(222-5) (245-30-3) (245-19-5) (246-22-5) (287-3) (326-8-3) (326-61-6) (327-24-2) (327-38-2) (339-3) (669-3) (669-4) (669-5) (681-9) (691-13) (691-9) (693-3-8) (711-26)

D.2.11.3 – COMMENT: Several commenters stated that the framing of the alternatives is unreasonable and diminishes the benefits of a site-specific assessment, or that the GEIS should include an analysis of the benefits of site-specific assessments. One commenter stated that the structure of the alternatives around the efficiency of a generic assessment reduces the comparison of alternatives to a comparison of administrative efforts. The commenter stated that the GEIS does not sufficiently support the conclusion that there is no benefit to the more comprehensive information in site-specific reviews, which the commenter believes can provide more and better information on the relative risk of high-consequence events and appropriate mitigation strategies across sites. Commenters stated that the current inclusion of long-term and indefinite timeframes and discussion of high-consequence events is ineffectual and plays no role in real analysis. The commenter also stated that because the conclusion in the GEIS is that environmental impacts are not affected by performing a generic versus a site-specific analysis, the inclusion of site-specific information that would allow for an adequate review is "assumed away." Further, the commenter stated that the GEIS does not provide evidence for the assertion that the impacts do not vary across alternatives and provide for the same level of protection. The commenter goes on to say that the Court of Appeals' standard for acceptability of a generic evaluation is based on risk, not on a comparison of fuel handling, as the GEIS describes. The commenter stated that postulated accidents or catastrophic events vary across

sites due to site-specific concerns, but are calculated in the GEIS according to the magnitude of the population exposed; however, populations residing near individual plants receive limited discussion in the GEIS. The commenter notes that if these factors were considered on a site-specific basis, they may lead to different impact determinations (MODERATE or LARGE rather than SMALL) and therefore different outcomes.

RESPONSE: The NRC disagrees with the comments. The Federal action in this proceeding is the issuance of a rule, whose consequences—and thus its environmental impacts—are primarily administrative in nature. For a more detailed discussion of comments on whether the NRC has properly framed the Federal action see Sections D.2.9.1 and D.2.9.7 of this appendix.

In addition, the NRC has not determined—and NEPA does not require the NRC to consider—whether one method of analysis would provide a better environmental review than another. Nonetheless, in Chapter 7, the NRC acknowledges that some view a site-specific review to be superior to a generic approach. For each of the resource areas analyzed in the GEIS, the NRC has reached an impact determination (SMALL, MODERATE, LARGE, or a range) that is appropriate for all sites. The assumptions used in the analysis are sufficiently conservative to bound the impacts such that variances that may occur between sites are unlikely to result in environmental impact determinations that are greater than those presented in the GEIS. Although a site-specific review might produce more details for analysis, the NRC has concluded that the activities and potential impacts during continued storage are sufficiently similar at all sites that a conservative generic analysis is capable of providing the “hard look” required by NEPA. It is important to note that this GEIS satisfies only a portion of the NRC’s NEPA obligations related to the issuance of a reactor license or spent fuel storage facility license by generically evaluating the environmental impacts of continued storage. Prior to the completion of an individual licensing action, the NRC will conduct a site-specific environmental review and document the results of this review in an EA with a FONSI or in an EIS. For each site-specific ISFSI license (new, amended, or renewed) an EA is prepared.

The concerns raised in these comments regarding use of a generic analysis are discussed in more detail in Section D.2.11.1 of this appendix. The concerns raised in these comments regarding use of a generic analysis for accidents, including consideration of mitigation, are discussed in Sections D.2.35.2 and D.2.35.3 of this appendix. Further, NRC’s regulations at 10 CFR 2.335 allow participants in NRC proceedings to request that a rule, including the new Rule, not be applied—or be waived—in a particular proceeding because special circumstances are present that would prevent the application of the rule from satisfying the purpose of the rule. For more information on waivers, see the discussion in Section D.2.4.7 of this appendix.

Under the GEIS and Rule approach the NRC has adopted here, only the environmental impacts of the continued storage period are considered. The efficiencies gained through the resolution of generic issues related to continued storage in the GEIS, followed by codification of GEIS conclusions in 10 CFR 51.23 will allow the participants in NRC adjudications—including public

interest groups, the nuclear industry, State, local, and Tribal governments, and the NRC—to focus limited resources on addressing site- or proceeding-specific issues of concern. Further concerns about the use of the GEIS as a means to improve the efficiency of the licensing process are considered in Sections D.2.9.2 and D.2.9.5 of this appendix. Because the proposed action and options under the no-action alternative to the proposed action vary in terms of whether or how to use the GEIS in site-specific license reviews, rather than in terms of production or storage of the spent fuel, the environmental impacts of those applications do not vary among the alternatives. No changes were made to the GEIS or Rule as a result of these comments.

(473-4-1) (473-1-13) (473-1-14) (473-1-8) (619-1-21) (937-9)

D.2.11.4 – COMMENT: One commenter stated that because a site-specific review would be required for a permanent disposal site, site-specific reviews should be required for permanent onsite storage as well.

RESPONSE: The NRC disagrees with the comment. There are important differences between the analysis of indefinite continued storage in the GEIS and the analysis of the environmental impacts of a permanent disposal facility in a site-specific EIS. Section 1.1 of the GEIS includes an analysis of the impacts of indefinite storage because the Court of Appeals held that the Commission must evaluate the environmental impacts of continued storage assuming the Federal government fails to site a permanent disposal facility (*New York v. NRC*). This analysis of indefinite storage in the GEIS does not mean that the Commission endorses indefinite storage or that the Commission believes that disposal is not feasible, but rather reflects the Commission's need to develop an analysis that assesses the environmental impacts of continued storage in a manner that addresses the Court's remand. Further, the Rule does not authorize indefinite storage at any site, and a site-specific NRC environmental review is required before a reactor is licensed or before fuel can be stored onsite. The licensing process for the disposal of spent fuel falls under NRC regulations at 10 CFR Parts 60 and 63 and the requirements for environmental review fall under Part 51. This GEIS and Rule do not support a license application for permanent disposal at any site or sites. No changes were made to the GEIS or Rule as a result of this comment.

(619-1-22)

D.2.11.5 – COMMENT: One commenter asserted that a comprehensive analysis of safety data from all reactor sites, along with interactions of all elemental isotopes, structures, and other components, including cumulative impacts, must be analyzed. The commenter stated that without these elements, a generic analysis is incomplete and inadequate and leads to distortion and suppression of site-specific facts.

RESPONSE: The NRC disagrees with the comments that a generic environmental analysis is incomplete and inadequate without comprehensive site-specific safety data from all reactor sites. The courts have supported a generic evaluation of continued storage since the late 1970s (*Minnesota v. NRC*), and in 2012, the Court of Appeals noted that a generic assessment is an acceptable way to evaluate the environmental impacts of continued storage (*New York v. NRC*). Examples of other NRC generic environmental impact statements include nuclear power plant decommissioning (NUREG–0586, NRC 2002a), nuclear power plant license renewal (NUREG–1437, NRC 2013m), and uranium recovery in-situ leach facility licensing (NUREG–1910, NRC 2009a).

Under the GEIS and Rule approach the NRC has adopted here, only the environmental impacts of the continued storage period are considered. The Rule does not authorize the initial or continued operation of any nuclear power plant, and it does not authorize storage of spent fuel. A separate NRC action is required before a reactor is licensed and before fuel can be stored after the expiration of a reactor's license at a specific site. For site-specific licensing actions, the NRC conducts both a technical review of the safety aspects of a proposed facility and an environmental review in compliance with the provisions of NEPA. Site-specific factors are taken into account during these individual licensing reviews, including, as appropriate, the physical environment and the interaction of the facility with this environment both independently and cumulatively. Safety aspects, such as the topics raised in the comments, are the focus of the technical review. No changes were made to the GEIS or Rule as a result of these comments.

(823-64) (823-66) (823-67) (823-68)

D.2.11.6 – COMMENT: Several commenters stated that the analysis in the GEIS must bound site-specific issues in order for the NRC to analyze those issues generically. One commenter stated that some issues can be considered generically, but others cannot, so a bounding analysis is necessary for each type of impact. Another commenter stated that the NRC should enumerate which site-specific issues are excluded, or demonstrate that the analysis for each type of impact is bounding, especially for long-term and indefinite timeframes. The commenter listed several examples of needed bounding estimates, including cancers attributable to a radionuclide release, damage to riverine or other ecosystems, loss of agricultural land and production, and property damage. The commenter requested that these estimates be projected into the future to include accumulations of spent fuel.

RESPONSE: The NRC agrees in part and disagrees in part with the comments. The NRC agrees that the GEIS analysis must be adequately inclusive of the characteristics of sites and resource areas considered for a generic determination to be applied. However, the NRC does not agree that the analysis was not adequately bounding in the GEIS, or that the bounding estimates in the analysis must be specifically enumerated in the GEIS. The assumptions used in the analysis are sufficiently conservative to bound the impacts such that variances that may occur between sites are unlikely to result in environmental impact determinations greater than

those presented in the GEIS. In complying with the requirements of NEPA, the NRC developed what it views as reasonable conclusions regarding the environmental impacts. In accordance with NEPA, the NRC developed what it views as reasonable conclusions regarding the environmental impacts. In accordance with NEPA, the GEIS takes into account available information to analyze the environmental impacts of continued storage of spent fuel for each of the resource areas described in Chapters 4, 5, and 6 of the GEIS. This information, which is the basis for the analysis, is sufficient to make the impact determinations in the GEIS, which NRC concludes are neither worst case, nor underestimated. Additional concerns regarding use of a bounding analysis are discussed in Sections and D.2.16.6 and D.2.16.30 of this appendix.

As further detailed in Section D.2.11.1 of this appendix, the NRC has determined in the GEIS that the direct and indirect environmental impacts of continued storage at reactors can be analyzed generically. No changes were made to the GEIS or Rule as a result of these comments.

(897-6-1) (897-6-7) (898-5-13) (898-5-6)

D.2.11.7 – COMMENT: Many commenters requested clarification in the GEIS regarding what types of issues or resource areas would be covered or excluded under site-specific reviews compared to the generic assessment.

One commenter stated that during scoping, numerous participants expressed concern about the need for site-specific treatment of certain issues, and that the NRC recognized that some such issues may exist; however, the scoping decision did not provide criteria for site-specific consideration, and without amendments to 10 CFR 51.23(b), 51.53(c)(2), and 51.95(c)(2), participants in NRC adjudicatory proceedings must go through a laborious and uncertain waiver process to raise site-specific issues. The commenter stated that without these criteria, public participation is severely limited.

A commenter stated that the GEIS appears to conclude that although site-specific concerns can be considered later, no site-specific reviews will be required for continued storage. The commenter also asserted that the GEIS fails to demonstrate that the impacts identified in site-specific environmental reviews would not differ from the impacts identified in the GEIS, which is required if no areas are called out as needing site-specific review. Another commenter advises the NRC to use caution when determining which issues will be eliminated from future licensing considerations based on the commenter's experience with the PFSF in Utah.

One commenter expressed concern about the coverage of the Rule for the ISFSI at the Pilgrim nuclear power plant, asking whether the site-specific concerns such as vulnerability to sea-level rise and other climate change effects are being addressed with a site-specific EIS, or whether there are aspects of the GEIS that would apply to Pilgrim to cover those concerns. Another

commenter cited San Onofre transportation concerns and requested enumeration of how the GEIS adequately addresses those concerns.

Another commenter stated concern that if site-specific reviews are not required to take into account long-term storage concerns, as covered by the GEIS, then new information will not have an opportunity for consideration.

Last, a commenter stated concern that where the GEIS does leave opportunity for site-specific reviews, the review may be an EA (rather than an EIS), which the commenter indicates is less thorough.

RESPONSE: The NRC disagrees with the comments. The Rule codifies the environmental impacts of continued storage of spent fuel, which the NRC determined it was able to assess generically in the GEIS. The NRC's regulations at 10 CFR 2.335 allow participants in NRC proceedings to request that a rule, including 51.23, not be applied, or be waived, in a particular proceeding because special circumstances are present that would prevent the application of the rule from satisfying the purpose of the rule. For more information on the waiver, see discussion in Section D.2.4.7 of this appendix. Concerns in these comments about the use of a generic analysis, including whether it is appropriate for addressing climate change and transportation, are discussed in Section D.2.11.1 of this appendix. Concerns about the adequacy of public participation for issues related to continued storage are addressed in Section D.2.11.2 of this appendix. Further, as explained in Section D.2.11.1 of this appendix, the NRC has determined that the environmental impacts of continued storage can be analyzed generically and that the differences among specific sites did not render a generic analysis impossible or inappropriate. This means that, for each of the resource areas analyzed in the GEIS, the NRC has reached a generic determination (SMALL, MODERATE, LARGE, or a range) that is appropriate for all sites. The assumptions used in the analysis are sufficiently conservative to bound the impacts such that variances that may occur from site to site are unlikely to result in environmental impact determinations that are greater than those presented in the GEIS.

The NRC developed the analysis of the away-from-reactor ISFSI in the GEIS to provide readers a reasonable estimate of the impacts of this type of facility, which could possibly play a role in the continued storage of spent fuel. The analysis for an away-from-reactor ISFSI did not assume any specific location, and thus comments regarding any specific site are not applicable. If the NRC receives an application to license an away-from-reactor ISFSI, it will prepare a site-specific EIS for that action as required by 10 CFR 51.20(b)(9), addressing all of the environmental impacts of building, operating, and decommissioning the ISFSI. Regarding the consideration of new information, the NRC will review the GEIS and Rule for possible revision when warranted by significant events that may call into question the appropriateness of the rule.

Regarding the concern about allowance of EA reviews instead of EISs in site-specific reviews, adoption of the GEIS and Rule does not differ from the current licensing framework, which also allows either type of review for licensing actions, depending on the expected impacts. No changes were made to the GEIS or Rule as a result of these comments.

(1-28) (473-3-2) (473-1-4) (473-1-6) (473-1-7) (553-3) (579-3) (622-1-8) (718-2-15) (805-3) (836-14) (836-67) (898-5-29) (920-1) (920-15) (930-3-19) (930-1-7) (937-7)

D.2.11.8 – COMMENT: One commenter stated that in site-specific license renewal cases, the NRC does not consider energy conservation as part of the no-action alternative. The commenter states that the NRC's regulatory system does not provide a method for evaluating the effects of spent fuel storage and disposal costs on the choice of the no-action alternative in these site-specific reviews.

RESPONSE: The NRC disagrees with the comment. The selection of the no-action alternative in site-specific license renewal proceedings is outside the scope of this GEIS. The GEIS provides a generic analysis of the environmental impacts from the continued storage of spent fuel, while the proposed action and options under the no-action alternative include ways the NRC could address the environmental impacts of continued storage in its licensing actions. No changes were made to the GEIS or Rule as a result of this comment.

(897-7-14)

D.2.11.9 – COMMENT: Several commenters expressed their support for the use of a GEIS to evaluate the environmental impacts of continued storage of spent fuel. Some commenters cited the Court decision in *New York v. NRC* as supporting a generic determination or the efficiency of a generic assessment. Other commenters stated that site-specific reviews during individual licensing actions adequately consider alternatives to licensing, that a generic analysis adequately bounds site-specific concerns, and that the use of a GEIS is preferable to the no-action alternative.

RESPONSE: The NRC acknowledges the supportive comments. No changes were made to the GEIS or Rule as a result of these comments.

(30-16-3) (112-19-6) (205-2) (244-11-5) (250-15-3) (672-5) (827-1-10) (827-1-13) (827-1-14) (827-1-15) (827-1-7)

D.2.11.10 – COMMENT: Commenters argued that the GEIS is inconsistent with both court decisions and the NRC's practice of evaluating certain issues on a site-specific basis. Commenters questioned why the NRC is treating some issues, like severe accidents, differently during a plant's operating life and during continued storage. Some commenters noted that the License Renewal GEIS treats issues like severe accidents as site-specific issues, while this

GEIS addresses these issues generically. Further, the commenters noted that the NRC has stated in the past that certain aspects of spent fuel storage are inherently site-specific and require site-specific consideration. The commenters asserted that under *Limerick Ecology Action v. NRC*, the NRC is required to conduct a site-specific analysis of mitigation of severe accident risk and that the court excluded spent fuel storage from that requirement only because a repository would be available in the near future. The commenters contended that a site-specific analysis of severe accident risk for spent fuel storage is now required for each plant because the spent fuel pools contain more potential source term than the reactors, they are not within containment, and a repository is less likely now than when the Limerick court reached its decision.

RESPONSE: The NRC agrees in part and disagrees in part with the comments. First, the NRC agrees that the treatment of storage issues in the GEIS and Rule is different than in other NRC documents and proceedings. However, these differences do not represent a flaw or inconsistency in NRC regulations and technical analysis.

With regard to generic versus site-specific analysis, the comments mistake a policy decision for a NEPA obligation. In the License Renewal GEIS, the NRC elected to treat only a subset of issues generically: those for which the NRC was able to determine a single level of impacts that would occur at each site. However, in this GEIS, the NRC has determined either a range of impact levels or a single bounding impact level for each of the environmental resource areas. The NRC's analysis concluded that no site-specific analysis would result in an impact determination greater than those disclosed in the GEIS, although it is possible that impacts could be smaller. As discussed in Section D.2.9.7 of this appendix, NEPA does not require the NRC to perform site-specific reviews merely because a site-specific review could result in a more specific impact determination. Rather, NEPA requires that an agency analyze, disclose, and consider environmental impacts before deciding whether to proceed with a proposed action. The NRC has analyzed and determined the environmental impacts of continued storage as described in the GEIS, and these impacts will be incorporated or considered in licensing actions as described in 10 CFR 51.23.

To accommodate site-specific variation in future licensing actions that will rely on the Continued Storage GEIS, the NRC employed assumptions that are sufficiently conservative to bound impact determinations at various sites such that any differences that may exist between sites are unlikely to result in environmental impact determinations that are greater than those presented in the GEIS, including in the analysis of severe accident likelihood and consequences.

Second, the NRC agrees that no site-specific analysis of SAMAs (and in particular, those SAMAs that may be associated with continued storage) has been performed by the NRC or described in the GEIS or Rule. However, *Limerick* does not require the NRC to consider SAMAs in conjunction with codifying its generic determination of the environmental impacts of

continued storage. The Court of Appeals for the Third Circuit held in *Limerick* that the NRC cannot by policy statement generically exclude SAMAs from consideration in site-specific reactor licensing proceedings. The Court of Appeals did not require any special or different consideration for SAMAs bearing upon spent fuel storage, nor was it asked to decide that issue. No changes were made to the GEIS or Rule as a result of these comments.

(473-13-1) (473-13-2) (473-15-8) (897-6-2)

D.2.11.11 – COMMENT: One commenter stated that the no-action alternative should be revised to encompass the environmental consequences of continued storage of spent fuel generated pursuant to past and existing NRC licenses, including the minimum amount of spent fuel storage that would continue as a result of already licensed activities, types of spent fuel, current practices for transferring spent fuel from pools to dry casks, and currently available technologies required to manage spent fuel under existing licenses and allowable amendments. The commenter stated that the no-action alternative should also project types of fuel that would be produced over time, as well as mitigation options that may emerge, and that the NRC should consult with other agencies to describe the range of reasonably foreseeable impacts.

RESPONSE: The NRC disagrees with the comments. Under NEPA, alternatives to the proposed action necessarily focus on other means to achieve the purpose of and satisfy the need for the proposed action. Section 1.5 of the GEIS states that the purpose of the proposed action is to preserve the efficiency of the NRC's licensing processes with respect to the environmental impacts of continued storage, and the need for the proposed action is to provide processes for use in NRC licensing to address the environmental impacts of continued storage. Here, the proposed action satisfies the purpose and need for the proposed action by issuing a revised Rule that adopts into regulation the NRC's generic environmental conclusions for continued storage that NRC will consider with regard to continued storage in future licensing actions (See GEIS Section 1.4).

The no-action alternative here, including the options NRC could pursue in case of no action, is strictly related to the proposed action of issuing a Rule codifying the GEIS, rather than a new regime of regulatory actions imposing new obligations upon licensees. As explained in Section 1.6 of the GEIS, alternatives related to current spent fuel management practices or technologies, as well as future technologies are beyond the scope of the proposed action. Additional concerns that the comments raise regarding alternate options for spent fuel storage practices, such as expedited transfer, are addressed in Section D.2.14.2. No changes were made to the GEIS or Rule as a result of these comments.

(706-2-11) (706-2-7)

D.2.11.12 – COMMENT: One commenter asserted that the no-action alternative presented in the draft GEIS should not rely on the no-action alternative analysis in the Yucca Mountain EIS

because the commenter believes the DOE deliberately underestimated the environmental impacts. The commenter also stated that even without a generic Waste Confidence Rule, there may not be sufficient information to resume site-specific licensing decisions.

RESPONSE: The NRC disagrees with the comment. The Commission directed the NRC to incorporate by reference, as appropriate, existing studies and documents, including the no-action alternative addressed by DOE in the Yucca Mountain EIS (DOE 2008), in the development of the GEIS (NRC 2012a). Although the analysis of the no-action alternative in the Yucca Mountain EIS, which considers disposal of spent fuel, differs substantially from the assumptions and scenarios pertinent to continued storage as analyzed in the GEIS, the NRC has included information from the DOE analysis to describe the relative magnitude of the consequences that might occur should institutional controls be lost. This discussion will ensure that a decisionmaker will be adequately informed of the potential consequences of the total loss of institutional controls. Further information about NRC's consideration of loss of institutional controls can be found in D.2.19.1.

Regarding whether sufficient information exists to resume site-specific licensing, the NRC would conduct analyses to satisfy its NEPA obligations with respect to continued storage for reactor and storage facility licensing proceedings, regardless of the alternative selected. These analyses would use the best available information to satisfy NEPA and to address the concerns regarding continued storage that caused the Commission to halt final licensing decisions in CLI-12-16 (NRC 2012b). No changes were made to the GEIS or Rule as a result of this comment.

(610-10)

D.2.11.13 – COMMENT: Several commenters expressed support for the no-action alternative, or for site-specific reviews as an alternative, and provided several reasons for their support. Some commenters expressed concern that a less expensive option does not equal lower risk, or that concerns for issues such as wildlife habitats, land use, or socioeconomic circumstances must be considered on a site-specific basis. Two commenters stated that transparency and maximum input from the public is needed during site-specific reviews. One commenter stated that they disagree with the statement in the GEIS that the no-action alternative is not consistent with CEQ guidance on achieving efficiency and timeliness under NEPA. Another commenter stated that a generic analysis allows judgment to be used rather than factual analysis. In the context of their comments on the no-action alternative, one commenter stated a need for NRC to understand that sometimes consequences are so severe that even a small risk is unacceptable. Another commenter cited concern about the use of the pool fires study in the GEIS.

RESPONSE: The NRC disagrees with the comments in support of the no-action alternative or site-specific reviews as an alternative. Section 1.6 of the GEIS was updated to provide clarification of site-specific reviews as one option under the no-action alternative (not issuing a

rule) to the proposed action (rulemaking). Section 1.6 of the GEIS includes a discussion of how the various options under the no-action alternative would be implemented, while Chapter 7 addresses the costs of each option. The proposed action and each option under the no-action alternative provide a means for the NRC to address, in its environmental review documents, the environmental impacts of continued storage. The NRC has determined that a generic analysis of the environmental impacts of continued storage is possible despite site-specific differences, and the environmental impacts do not vary among the alternatives presented in the GEIS. Further, the NRC has determined that the most efficient means for fulfilling its NEPA obligations with respect to continued storage is to implement the proposed action, which is to issue a revised Rule that adopts into regulation the NRC's generic environmental conclusions in the GEIS.

The NRC acknowledges the benefits of and is committed to securing meaningful public participation. Concerns about the level of public participation associated with the proposed action and a preference for site-specific reviews to increase public input opportunities is discussed in Section D.2.11.2 of this appendix.

As previously noted, the environmental impacts of continued storage are essentially the same—not significant—for the proposed action and each of the options under the no-action alternative. The distinctions among the proposed action and the various options in the case of no action, as described in the cost-benefit analysis in Chapter 7 of the GEIS, relate to costs and timeliness. Based on those two factors, the site-specific review option is not consistent with CEQ guidance (CEQ 2012) regarding efficiency and timeliness in NEPA reviews.

The concern that the GEIS substitutes judgment for factual analysis speaks to the information basis for the GEIS. The NRC's analysis of the impacts of continued storage builds upon substantial experience and knowledge concerning siting reactors and spent fuel storage facilities and regulating storage facilities. Therefore, the NRC is able to reasonably describe typical spent fuel storage facility characteristics and activities in Chapter 2 and the affected environment in Chapter 3 of the GEIS. The NRC has concluded that sufficient information exists to perform a generic environmental analysis of the impacts of continued storage.

A response to concerns that sometimes consequences are so severe that even a small risk is unacceptable can be found in Section D.2.35.27 of this appendix. Regarding comments that certain information must be considered on a site-specific basis, the NRC discussed these concerns in Section D.2.11.1 of this appendix. Concerns or dissatisfaction with the studies referenced in the pool fires analysis in the GEIS is discussed in Section D.2.39.32 of this appendix. No changes were made to the GEIS or Rule as a result of these comments.

(30-17-7) (89-19) (112-3-3) (112-18-8) (327-38-1) (327-38-4) (354-1) (610-11) (622-1-3) (684-7) (693-2-13) (937-11) (937-19)

D.2.11.14 – COMMENT: One commenter stated that site-specific reviews are necessary to ensure that Fukushima lessons-learned are adequately incorporated, citing the NRC Near-Term Task Force report, that states, "the licensing bases, design and level of protection from natural phenomena differ among the existing operating reactors in the U.S., depending on when the plant was constructed and when the plant was licensed for operation."

RESPONSE: The NRC agrees in part and disagrees in part with the comment. The NRC agrees that the Near-Term Task Force reviews were considered and conducted on a site-specific basis. However, the NRC disagrees that the generic analysis in the GEIS is inadequate because it does not explicitly incorporate lessons-learned from the Fukushima Dai-ichi event.

Section 2.1.2.1 of the GEIS describes the NRC's responses to lessons learned from the Fukushima Dai-ichi nuclear accident. The NRC established a task force of senior agency experts (i.e., the Near-Term Task Force). In response to the Near-Term Task Force's recommendations, the NRC issued multiple orders and a request for information to all of its operating nuclear power plant licensees on March 12, 2012 (NRC 2012e). The NRC will use the information collected to determine whether to update the design basis and systems, structures, and components important to safety, including spent fuel pools. However, because the NRC has not yet received all responses to the request for information and has not decided whether any license needs to be modified, suspended, or revoked, the NRC assumes for purposes of analysis in this GEIS that the existing regulatory framework remains unchanged. Also, the NRC has determined that lessons-learned from Fukushima about reactor accidents do not apply to decommissioning nuclear power plants that have spent fuel in continued storage in either spent fuel pools or dry casks. However, as any new lessons-learned arise, the NRC will consider whether they should be applied to facilities with spent fuel in continued storage.

The GEIS describes the environmental impacts of postulated accidents during continued storage of spent fuel. This includes both design basis accidents in Section 4.18.1 of the GEIS and severe or beyond-design basis accidents in Section 4.18.2. Because the GEIS impacts analysis is based on the existing regulatory framework and considers beyond design-basis accidents, consideration of the outcome of the Fukushima Dai-ichi lessons-learned is not needed for the GEIS analysis. No changes were made to the GEIS or Rule as a result of these comments.

(693-2-15) (693-2-17) (693-4-7)

D.2.12 Comments Concerning Alternatives – GEIS Only

D.2.12.1 – COMMENT: One commenter expressed disapproval that the GEIS-only alternative allows for EA reviews instead of more thorough site-specific EIS reviews.

RESPONSE: The NRC disagrees with the comment. The NRC has clarified in the final GEIS that the no-action alternative to the rulemaking would be not to conduct a rulemaking, that is, not to codify the impact determinations from the GEIS. Further, the NRC has clarified that the GEIS-only alternative described in the draft GEIS is an option that the NRC could pursue under the no-action alternative. If NRC were to pursue the GEIS-only option under the no-action alternative, then allowance of EA reviews instead of EIS would not differ from the current licensing framework or from the proposed action, which also allow either type of review for licensing actions, depending on the expected impacts. No changes were made to the GEIS or Rule as a result of this comment.

(937-21)

D.2.12.2 – COMMENT: One commenter requested clarification about the GEIS-only alternative; specifically, whether it includes an analysis of failure to secure a permanent disposal site, as mandated by the Court of Appeals, and the manner in which site-specific issues will be addressed. The commenter stated that the GEIS process could serve as a beneficial starting point to scope and establish parameters for addressing site-specific issues.

RESPONSE: The NRC agrees with the comment that the GEIS can be a beneficial starting point for addressing site-specific issues and issues regarding continued storage of spent fuel. The GEIS provides a generic assessment of environmental impacts of continued storage. The NRC will incorporate the impact determinations from the GEIS into the NEPA reviews for individual licensing actions. In response to the comment's request for clarification, this GEIS, whether prepared for either the proposed action or under the GEIS-only no-action alternative option, does include an analysis of impacts resulting from failure to secure a permanent disposal site (the indefinite storage scenario), as mandated by the Court of Appeals. The NRC has clarified in the final GEIS that the no-action alternative to the rulemaking would be not to conduct a rulemaking, that is, not to codify the impact determinations from the GEIS. Further, the NRC has clarified that the GEIS-only alternative described in the draft GEIS is an option that the NRC could pursue under the no-action alternative. No changes were made to the GEIS or Rule as a result of this comment.

(328-12-2)

D.2.12.3 – COMMENT: One commenter expressed support for the GEIS-only alternative, because it would serve as a guidance document, may prevent the GEIS from becoming an impediment to decision-making, planning, and mitigation strategy implementation, and does not prevent filing of contentions or challenges. The commenter stated that the GEIS-only alternative provides a “middle ground” of efficiency, and would allow the GEIS to serve as a tool, not a Rule. Another commenter also expressed support for the GEIS-only alternative, but stated that current nuclear waste storage facilities are not safe enough for use after the 60-year decommissioning period, at which point canisters should be transported offsite for disposal.

RESPONSE: The NRC disagrees with the comments. The NRC has clarified in the final GEIS that the no-action alternative to the rulemaking would be not to conduct a rulemaking, that is, not to codify the impact determinations from the GEIS. Further, the NRC has clarified that the GEIS-only alternative described in the draft GEIS is an option that the NRC could pursue under the no-action alternative. Although the GEIS-only option under the no-action alternative would satisfy the NRC's NEPA obligations, the use of this option without an accompanying rule would result in the constant litigation of identical issues in multiple proceedings. The NRC has decided to codify the GEIS findings and conclusions of the GEIS in a rule to allow for the more efficient conduct of its proceedings, and to allow licensing boards and parties to focus limited resources on site-specific issues. In addition, the NRC's regulations at 10 CFR 2.335 allow participants in NRC proceedings to request that a rule, including 10 CFR 51.23, not be applied, or be waived, in a particular proceeding because special circumstances are present that would prevent the application of the rule from satisfying the purpose of the rule. For more information on waiver, see Section D.2.47 of this appendix. With respect to mitigation strategies, these issues will generally be considered in site-specific environmental reviews. The GEIS does, however, discuss mitigation related to aging, damaged, or degraded fuel (see Section D.2.17.4 of this appendix). Any determinations by the NRC about whether to require mitigation measures will occur on a site-specific basis during facility licensing or during the course of ongoing NRC oversight. The comment's concerns regarding safe storage of spent fuel beyond the 60-year decommissioning period are addressed in Sections D.2.38.6 and D.2.38.8 of this appendix. No changes were made to the GEIS or Rule as a result of these comments.

(820-12) (836-26) (836-63) (836-65) (930-3-15) (930-3-17) (930-1-19)

D.2.13 Comments Concerning Alternatives – Policy Statement

D.2.13.1 – COMMENT: Some commenters did not support the policy-statement alternative, as specified in the draft GEIS. Two commenters disagreed with the policy-statement alternative because they believe it would circumvent public oversight. One commenter stated that the policy statement would allow nuclear waste operations to persist on a permanent basis. Several commenters stated that a policy-statement alternative would inappropriately allow use of the GEIS to avoid addressing site-specific issues. One commenter did not support the policy-statement alternative because it would result in a costly and inefficient review process. The commenter supported the proposed action.

RESPONSE: The NRC agrees in part and disagrees in part with the comments. The NRC has clarified in the final GEIS that the no-action alternative to the rulemaking would be not to conduct a rulemaking, that is, not to codify the impact determinations from the GEIS. Further, the NRC has clarified that the GEIS-only alternative described in the draft GEIS is an option that the NRC could pursue under the no-action alternative. The NRC acknowledges and agrees with the comments' support for not choosing the policy-statement alternative in the draft GEIS (clarified as an option under the no-action alternative in this final GEIS). However, the NRC

disagrees that the policy-statement option would circumvent public oversight. In fact, the policy-statement option would open the GEIS determinations to litigation in each site-specific licensing proceeding. In contrast, binding rules—like the proposed update to 10 CFR 51.23—are generally not subject to litigation in a site-specific licensing action, absent a waiver. The NRC's regulations at 10 CFR 2.335 allow participants in NRC proceedings to request that a rule, including 51.23, not be applied, or be waived, in a particular proceeding because special circumstances are present that would prevent the application of the rule from satisfying the purpose of the rule. For more information on waiver, see Section D.2.4.7 of this appendix. In addition, the NRC disagrees that the GEIS would be inappropriately applied to avoid site-specific issues or that it allows for nuclear waste operations to persist on a permanent basis. Under the GEIS and Rule approach adopted by the Commission, participants in site-specific proceedings can request a waiver for those issues where they can demonstrate that special circumstances exist for their proceeding. Finally, the GEIS only provides a generic analysis of the environmental impacts from the continued storage of spent fuel and licensees still need to obtain a license to construct and operate a facility; the GEIS does not permit permanent operations of any facility. No changes were made to the GEIS or Rule as a result of these comments.

(827-1-16) (836-27) (930-2-1) (930-3-22) (937-22)

D.2.13.2 – COMMENT: One commenter expressed support for the policy-statement alternative as specified in the draft GEIS because the GEIS could be incorporated into future licensing actions, and a policy statement would allow for consideration of site-specific facts and filing of contentions while eliminating rehearing of generic issues.

RESPONSE: The NRC disagrees with the comment. The NRC has clarified in the final GEIS that the no-action alternative to the rulemaking would be not to conduct a rulemaking, that is, not to codify the impact determinations from the GEIS. Further, the NRC has clarified that the GEIS-only alternative described in the draft GEIS is an option that the NRC could pursue under the no-action alternative. The policy-statement option, as stated in GEIS Section 1.6.1.3, would not preserve the efficiency of NRC's licensing processes like a binding Rule would, resulting in considerable expenditure of public, NRC, and applicant resources. Under the policy-statement option, the Commission would still have the choice to apply the environmental impact conclusions determined in the GEIS in site-specific NEPA analyses for a specific proceeding, but that determination could be subject to litigation in each proceeding. In contrast, binding rules—like the proposed update to 10 CFR 51.23—are generally not subject to litigation in a site-specific licensing action, absent a waiver. NRC's regulations at 10 CFR 2.335 allow participants in NRC proceedings to request that a rule, including 10 CFR 51.23, not be applied, or be waived, in a particular proceeding because special circumstances are present that would

prevent the application of the rule from satisfying the purpose of the rule. For more information on waiver, see Section D.2.4.7 of this appendix. No changes were made to the GEIS or Rule as a result of this comment.

(579-4)

D.2.14 Comments Concerning Alternatives – Considered but Eliminated

D.2.14.1 – COMMENT: Several commenters stated that the NRC should consider, as an alternative in the GEIS, a requirement that licensees transfer spent fuel from spent fuel pools to dry cask storage on an expedited basis. Some commenters stated that the NRC did not provide proper reasoning for eliminating this alternative. Several commenters stated that the NRC should consider expedited transfer as a mitigation measure. Several commenters also requested hardened onsite storage (also known as HOSS) and stated that HOSS is a safer alternative. One commenter disagreed with the NRC's finding that spent fuel can be stored in pools safely over the short term, and two commenters cited multiple papers supporting the environmental benefits of moving fuel more than 5 years old into dry cask storage to reduce potential risks (e.g., spent fuel pool fires). Several commenters stated that the NRC did not properly consider the dangers or consequences of crowded spent fuel pools. One commenter stated that the NRC expedited transfer study (COMSECY–13–0030) is not directly applicable to continued storage because it did not consider transfer of fuel at plants that are not operating and assumed that the fuel may be able to be immediately shipped rather than stored in dry casks onsite.

RESPONSE: The NRC disagrees with the comments. As explained in Section 1.6.2.2 of the GEIS, expedited transfer of spent fuel from spent fuel pools to dry cask storage systems is outside the scope of this rulemaking proceeding, for the following reasons. First, the suggested alternative does not meet the purpose and need for the proceeding. Second, neither the GEIS nor the Rule proposes or imposes new requirements for the storage of spent fuel (e.g., expediting the transfer of spent fuel from pools to casks for dry storage). The GEIS, which provides a regulatory basis for the Rule, assesses the reasonably foreseeable environmental impacts of the continued storage of spent fuel in accordance with current NRC requirements. The impacts of expedited transfer and the use of hardened dry storage are not within the scope of this proceeding because the NRC does not currently require these actions. Further, the Commission evaluated a staff assessment of this issue in a separate process and issued its decision on May 23, 2014 (NRC 2014a) not to pursue further evaluation of the expedited transfer of spent fuel from pools to dry storage.

Additional comments concerning expedited transfer are addressed in Section D.2.50.1 of this appendix. Some comments raised other issues in addition to expedited transfer. Comments concerning HOSS are addressed in Section D.2.50 of this appendix. Comments concerning risk

of spent fuel pool fires are addressed in Section D.2.39 of this appendix. No changes were made to the GEIS or Rule as a result of these comments.

(1-2) (245-29-1) (556-5-2) (604-10) (607-5) (681-6) (706-2-19) (718-2-18) (836-33) (930-2-7)

D.2.14.2 – COMMENT: The NRC received several comments that challenged the NRC's selection of alternatives in the GEIS and requested consideration of alternatives for storage of spent fuel. Specifically, these comments argued that the NRC should have assessed other reasonable alternatives that reduce the environmental impacts of reactor operation and spent fuel storage, such as requiring spent fuel to be moved from spent fuel pools to dry casks as soon as possible (expedited transfer) and suspending the operation of nuclear power plants until a repository becomes available. Several commenters suggested that the NRC require the use of HOSS, reduce spent fuel pool density, and move casks to safer or consolidated locations. Several commenters cited studies that address spent fuel pool risks, including a Sandia National Laboratories study on the reduction of spent fuel storage volume, which a commenter stated was new and significant information requiring the NRC's consideration under NEPA; studies by Robert Alvarez (Alvarez et al. 2003; Alvarez 2011) recommending a return to open-rack configurations in spent fuel pools; and a National Academy of Sciences (NAS) study (NAS 2006) recommending that, space permitting, empty slots in spent fuel pools be arranged throughout the pool to promote air cooling in the event of a complete pool drainage. One commenter also stated that the NRC Fukushima Near-Term Task Force failed to follow the advice of the Blue Ribbon Commission to the NAS to analyze the advantages and disadvantages of moving fuel into dry storage to reduce pool density as part of the Near-Term Task Force report.

RESPONSE: The NRC disagrees with the comments. Sections 1.4 and 1.5 of the GEIS state that the proposed action is to issue a revised Rule that adopts into regulation the NRC's generic environmental conclusions for continued storage, and the purpose is to preserve the efficiency of the NRC's licensing processes with respect to the environmental impacts of continued storage, and the need for the proposed action is to provide processes for use in NRC licensing to address the environmental impacts of continued storage. The NRC considered a number of the alternatives suggested by the comments; however, these suggestions were eliminated because they failed to address the purpose and need for the proposed action. Considered-but-eliminated alternatives include the cessation of licensing or reactor operation and the implementation of additional regulatory requirements, such as the expedited transfer of spent fuel from pools to casks and the use of HOSS. Alternatives such as denials of operating licenses or renewals of licenses are considered during the site-specific environmental reviews of individual license applications. Additional discussion of these issues can be found in Section 1.6 of the GEIS.

Secondly, as detailed in Section 1.6.2.2 of the GEIS, the GEIS does not propose or impose safety requirements for the storage of spent fuel, such as those suggested by the comments.

The GEIS assesses the reasonably foreseeable environmental impacts of the continued storage of spent fuel in accordance with current NRC requirements. The impacts of the suggested alternatives are not within the GEIS scope because the NRC does not currently require these actions.

Finally, the comments raise additional concerns addressed in further detail in this GEIS. Comments regarding stopping NRC licensing activities and halting any further production of spent fuel are addressed in Section D.2.14.5 of this appendix. Additional information regarding comments related to expedited transfer can be found in Section D.2.14.1 of this appendix. The NRC's consideration of spent fuel pool fires is detailed in Appendix F of the GEIS; comments concerning spent fuel pool fires are addressed in Section D.2.39 of this appendix. No changes were made to the GEIS or Rule as a result of these comments.

(1-17) (141-1) (222-15) (326-12-2) (377-5-20) (490-5) (537-5) (611-54) (706-2-21) (718-3-1) (718-2-10) (718-2-17) (916-2-10) (916-3-24)

D.2.14.3 – COMMENT: One commenter disagreed with a statement in Section 1.6.3.1 of the draft GEIS, which states that "the Commission has already established criteria that provide reasonable assurance of public health and safety and due consideration of environmental impacts in the construction and operation of nuclear power plants, including facilities for continuing storage of spent fuel."

RESPONSE: The NRC disagrees with the comment. The NRC sets forth its siting and safety requirements for nuclear reactors in 10 CFR Part 100 (Reactor Site Criteria), 10 CFR Part 50 (Domestic Licensing of Production and Utilization Facilities), and 10 CFR Part 52 (Licenses, Certifications, and Approvals for Nuclear Power Plants). As described in Section 4.18 of the GEIS, additional measures for mitigation include the NRC's reactor site criteria in 10 CFR Part 100 that require nuclear power plant sites to have (1) certain characteristics that reduce the risk to the public and the potential impacts of an accident and (2) emergency preparedness plans and protective actions measures for the site and environs. The safety features, measures, and plans established in 10 CFR Part 100 and 10 CFR Parts 50 and 52 reflect the defense-in-depth philosophy used by the NRC to protect the health and safety of the public and environment. No changes were made to the GEIS or Rule as a result of this comment; however, Sections 1.3, 1.4, 1.5, and 1.6 of the GEIS have been updated to provide clarification to the descriptions of the purpose of the GEIS, proposed action, purpose and need, and alternatives, respectively, and the statement to which the comment refers has been revised for clarity.

(684-8)

D.2.14.4 – COMMENT: Several commenters suggested that the NRC should have considered HOSS as an alternative. The commenters stated that many environmental groups have advocated for HOSS, and that HOSS appears to be the safest alternative until final disposal is

ready. One commenter stated that the NRC should disclose the differences between surface storage and deep geologic disposal in a safety context.

RESPONSE: The NRC disagrees with the comments. As explained in Section 1.6.2.2 of the GEIS, requiring HOSS is outside the scope of this rulemaking proceeding for the following reasons. First, the suggested alternative does not meet the purpose and need for the proceeding. Second, neither the GEIS nor the Rule proposes or imposes safety requirements for the storage of spent fuel. The GEIS, which provides a regulatory basis for the Rule, assesses the reasonably foreseeable environmental impacts of the continued storage of spent fuel. The impacts of requirements or use of hardened dry storage are not within the scope of this proceeding because the NRC does not currently require these actions. Ongoing NRC actions regarding the use of HOSS are described in Section D.2.50.5 of this appendix. No changes were made to the GEIS or Rule as a result of these comments.

(329-33-1) (688-18) (836-32) (930-2-6) (938-5)

D.2.14.5 – COMMENT: Many commenters disagreed with elimination of Cessation of Licensing or Cessation of Reactor Operation as an alternative in the GEIS, or stated that the NRC did not give these alternative due consideration. Several commenters stated that the NRC must analyze these alternatives to comply with NEPA, that the Court of Appeals in *New York v. NRC* has already identified this alternative as a reasonable alternative, and that failure to include these alternatives in the GEIS is arbitrary and capricious. Another commenter stated that the NRC inappropriately defined the purpose and need of the GEIS to restrict the alternatives that must be analyzed to comply with NEPA, including eliminating the option to cease licensing and operations. One commenter pointed to Section 103.d of the AEA, which prohibits the NRC from issuing a license if issuance would be “inimical” to public health or if the NRC does not have “reasonable assurance,” further stating that the “essence” of the Court of Appeals’ decision in *New York v. NRC* was that spent fuel is a danger to public health and safety, and that there is no reasonable assurance that a repository will ever be available, thus requiring the NRC to consider ceasing nuclear power production as an alternative. One commenter stated that the generic approach is inadequate to meet the NEPA requirements for licensing decisions. One commenter stated that because licensing decisions cannot be made absent a Waste Confidence Rule, cessation of licensing must be considered under the no-action alternative. Two commenters stated that the argument against termination of licensing is circular because the NRC states that it already has regulations in place to provide reasonable assurance of public health and safety, but part of the regulatory basis providing this assurance is the Continued Storage Rule. These commenters also noted that the NRC has authority to revoke or decline to issue licenses under 10 CFR 50.100, including if or when operation is inimical to public health and safety, or if or when the Commission has no reasonable assurance of safe operation. Another commenter stated that the NRC must reject all license renewal applications whose proceedings are currently held in abeyance. One commenter requested consideration of

a scenario in which there is no way to safely store waste, which would then require the shutdown of reactors. Other commenters stated that because a permanent repository still does not exist, licensing should not continue.

RESPONSE: The NRC disagrees with the comments. The NRC considered and rejected cessation of reactor licensing or cessation of reactor operations as alternatives to the revised Rule, as detailed in Section 1.6.2.1 of the GEIS. The stated purpose and need for the rulemaking proceeding are not satisfied by cessation of reactor licensing or reactor operations. The alternative of not issuing or not renewing a nuclear power plant license is considered during the site-specific review of an individual license application. Through the AEA, Congress has mandated that the NRC establish criteria to allow the licensing of nuclear power plants. Therefore, without Congressional direction to do so, the NRC may not deny a reactor license unless it determines that a license applicant has not met the NRC's regulatory standards for issuance of a license. Further, unless a threat to the public health and safety or the common defense and security exists, the NRC has no authority to deprive current licensees of their vested interest in licenses already issued in compliance with those regulatory standards. Although cessation of nuclear power plant licensing and operations would halt the future generation of spent fuel, the environmental impacts of continued storage would not cease until sufficient repository capacity becomes available to dispose of the spent fuel already amassed. Regarding the comment that licensing decisions cannot be made absent a Waste Confidence Rule, the NRC has suspended issuance of final licenses until the Court of Appeals' remand is addressed (CLI-12-16, NRC 2012b). However, as an option under the no-action alternative, absent a GEIS, consideration of impacts from continued storage of spent fuel would be addressed in site-specific licensing reviews, as described in Section 1.6.1 of the GEIS.

The comments raise several other issues that are discussed elsewhere in this document. Comments regarding the adequacy of a generic approach are addressed in Section D.2.11.1 of this appendix. Concerns regarding reasonable assurance of safety are addressed in Section D.2.38. Comments regarding assurance of repository availability are addressed in Section D.2.37 of this appendix. Additional comments regarding concerns with alternatives are addressed in Sections D.2.9.1 and D.2.9.7 of this appendix. No changes were made to the GEIS or Rule as a result of these comments.

(1-24) (1-3) (30-12-11) (30-12-5) (45-11-8) (65-2) (163-2-3) (222-22) (222-9) (246-32-3) (326-63-2) (327-13-4) (328-4-10) (328-4-2) (328-4-5) (328-4-7) (371-1) (496-7) (604-9) (610-9) (611-14) (611-22) (611-33) (611-58) (614-7) (614-8) (640-4) (684-10) (688-12) (688-13) (688-15) (688-2) (688-23) (688-8) (688-9) (693-1-10) (706-2-18) (707-3) (836-28) (836-30) (843-1) (897-3-10) (898-5-25) (930-2-2) (930-2-4) (950-1)

D.2.14.6 – COMMENT: Several commenters requested that licensing and relicensing of nuclear reactors or production of nuclear waste should not continue until such time that a permanent solution for nuclear waste (e.g., a geologic repository) is available. One commenter

requested that the current moratorium on licensing continue until an interim storage facility has been sited and licensed.

RESPONSE: The NRC disagrees with the comments that the NRC should continue the licensing moratorium or cease licensing or relicensing of nuclear reactors until a permanent solution (e.g., a repository) or an interim storage facility is available. As stated in Section 1.6.2.1 of the GEIS, the cessation of licensing or licensed operations was considered but eliminated as an alternative because it would not satisfy the purpose and need for the proposed action. As further discussed in Section 1.6.2.1 of the GEIS, the NRC has no authority under the AEA to deny a license if the applicant has met the NRC's licensing requirements, or to suspend a license on grounds other than noncompliance with legal requirements.

Regarding the request that the current moratorium on licensing continue until interim storage facilities are sited or disposal is available, licensing decisions are not dependent on siting, licensing, or operation of interim storage facilities or disposal sites. Further information about concerns regarding the NRC's authority to license in the absence of a repository are addressed in Section D.2.14.5 of this appendix. No changes were made to the GEIS or Rule as a result of these comments.

(406-2) (451-6) (569-3) (572-2) (714-2-4) (714-1-6) (716-2) (716-6) (739-3) (757-7) (758-2) (763-3) (791-3) (939-3) (940-1) (1004-2)

D.2.14.7 – COMMENT: Many commenters stated that use of nuclear power, production of nuclear waste, or licensing and relicensing of nuclear power plants should cease. The commenters did not expressly request that this be considered as an alternative to the Rule, but the comments related to the GEIS or GEIS analysis. Some requested licensing cease until it can be proven that waste can be stored safely, or expressed concern that current waste storage is unsafe. Others requested that other energy sources be used instead of nuclear power or analyzed as an alternative to nuclear power. Some commenters expressed concern about the age of the reactors and the safety of the aging fleet. Other commenters called for HOSS, cleanup of existing sites, or transfer of fuel from pools to casks. Some commenters also stated that leaving nuclear waste for future generations to deal with is an intergenerational injustice.

RESPONSE: The NRC disagrees with the comments that the GEIS should have considered cessation of licensing, or shutting down nuclear power plants, in greater depth as an alternative in the GEIS. The NRC considered and rejected cessation of reactor licensing or cessation of reactor operations as an alternative to the Rule in the GEIS, as detailed in Section 1.6.2.1 of the GEIS. The cessation of reactor licensing or reactor operations does not satisfy the stated purpose for this proceeding, which is to preserve the efficiency of the NRC's licensing processes, or the need for the GEIS, which is to provide processes for use in the NRC's licensing process to address the environmental impacts of continued storage. For this rulemaking, the proposed action and options under the no-action alternative to the proposed

action concern how and whether to use a generic analysis in site-specific licensing reviews, rather than alternative methods of power production or ceasing production of spent fuel. The alternatives of not renewing or not issuing a nuclear power plant license or use of alternate sources of energy generation can be considered in a site-specific review.

The NRC acknowledges the concerns reflected in the comments regarding continued nuclear power plant operation, but issues involving reactor operations, generation and storage of spent fuel during the licensed life of a reactor, and the ultimate disposal of spent fuel are beyond the scope of the GEIS and Rule, which concerns the environmental impacts of continued storage of spent fuel. Further, the NRC is an independent regulator that does not promote nuclear or other types of energy.

The comments also raised additional concerns that are addressed elsewhere in this document. Concerns about the safe storage of spent fuel are addressed in Section D.2.38 of this appendix. Comments requesting additional regulatory requirements for storing spent fuel are addressed Section D.2.14.2 of this appendix. Comments with concerns about intergenerational justice are addressed in Section D.2.23.1 of this appendix. No changes were made to the GEIS or Rule as a result of these comments.

(30-12-7) (45-11-10) (244-14-12) (245-8-2) (245-46-3) (245-15-4) (245-37-5) (250-28-8) (325-19-4) (327-39-5) (329-17-4) (329-32-5) (336-15) (402-4) (402-6) (405-5) (443-9) (491-2) (491-6) (552-1-5) (610-2) (620-12) (711-4) (819-23) (836-29) (851-13) (929-18) (930-2-3) (938-1) (1007-3)

D.2.14.8 – COMMENT: Several commenters requested that the GEIS consider, as an alternative, cessation of licensing, relicensing, or production of nuclear waste until a permanent repository is available. Some commenters stated that the NRC does not have the authority to license production of more waste until safe isolation of waste from the environment is proven, and one commenter stated that this position was found reasonable by the Court of Appeals in *New York v. NRC*. Commenters also raised the issue of regulatory capture.

RESPONSE: The NRC disagrees with the comments. The NRC considered and rejected cessation of reactor licensing or cessation of reactor operations as an alternative in the GEIS, as detailed in Section 1.6.2.1 of the GEIS. The cessation of reactor licensing or reactor operations does not satisfy the stated purpose for this proceeding, which is to preserve the efficiency of the NRC's licensing processes with respect to the environmental impacts of continued storage, or the need for the GEIS, which is to provide processes for use in the NRC's licensing process to address the environmental impacts of continued storage. For this rulemaking, the proposed action and NRC's potential options under the no-action alternative concern how and whether a generic analysis is used in site-specific licensing reviews, rather than alternative methods of power production or ceasing production of spent fuel. The

alternative of not renewing or issuing a nuclear power plant license is considered in individual site-specific licensing reviews.

The comments also raise additional concerns that are addressed elsewhere in the GEIS. Concerns about the NRC's ability to regulate in an unbiased way are addressed in Section D.2.49.19 of this appendix. Comments regarding the authority for licensing in the absence of a repository are addressed in Section D.2.37.14 of this appendix. No changes were made to the GEIS or Rule as a result of these comments.

(30-21-2) (72-1) (143-4) (330-3) (357-2) (507-1) (556-5-9) (938-16)

D.2.14.9 – COMMENT: Several commenters requested that the GEIS include an analysis of alternative sources of energy, including their feasibility, "cradle to grave" environmental impacts, and a comparison of the costs from nuclear energy and other energy sources. Some of the commenters requested an end to nuclear power based on this analysis. One commenter cited numerous sources with information about replacement of nuclear power with renewable energy generation.

RESPONSE: The NRC disagrees with the comments insofar as they request an analysis of alternative energy sources. As noted in Sections 1.4 and 1.5 of the GEIS, the proposed action is to issue a revised Rule that adopts into regulation the NRC's generic environmental conclusions for continued storage, and the purpose is to preserve the efficiency of the NRC's licensing processes with respect to the environmental impacts of continued storage, and the need for the proposed action is to provide processes for use in NRC licensing to address the environmental impacts of continued storage. For this rulemaking, the proposed action, as well as NRC's potential options under the no-action alternative to the proposed action, concern how and whether a generic analysis is used in site-specific licensing reviews, rather than alternative methods of power generation, such as renewable energy. Alternative methods of power generation and the costs of those alternatives will be evaluated in site-specific nuclear power plant licensing reviews. No changes were made to the GEIS or Rule as a result of these comments.

(3-5) (39-8) (110-2) (198-6) (241-4) (327-27-7) (336-13) (688-19) (688-20)

D.2.14.10 – COMMENT: Several commenters stated support for continued nuclear power generation, or stated that the GEIS correctly eliminated cessation of licensing and cessation of reactor operation as alternatives. One commenter stated that delay in continued and expanded use of nuclear power would result in public health effects related to use of fossil fuels for power generation.

RESPONSE: The NRC acknowledges the comments. Because the GEIS assesses the environmental impacts of the continued storage of spent fuel, the impacts from the use of either

nuclear power or fossil fuels for power generation are outside the scope of this analysis. No changes were made to the GEIS or Rule as a result of these comments.

(30-16-2) (347-3) (355-4) (692-9) (745-5)

D.2.15 Comments Concerning Alternatives – Costs

D.2.15.1 – COMMENT: One commenter stated that the cost-benefit analysis in the GEIS is meaningless because the cost difference is limited to administrative costs, which are not typically the focus of NEPA analysis. Further, the commenter noted that the method of evaluating the administrative costs is inappropriate, in part because it includes "sunk" costs of developing the GEIS for the three action alternatives. The commenter stated that these sunk costs can no longer be avoided and thus should not be included.

RESPONSE: The NRC disagrees with the comment with respect to the meaningfulness of the cost-benefit analysis and the exclusion of sunk or past costs in the cost-benefit analysis. The analysis in Chapter 7 is appropriate because it focuses on the cost and benefit distinctions between the proposed action and the options under the no-action alternative (i.e., the site-specific review, GEIS-only, and policy-statement options) rather than the similarities. The comparison of the proposed action and options under the no-action alternative in Section 7.6 of the GEIS includes the unquantified costs and benefits and the quantified costs, which the comment refers to as administrative costs.

Because the proposed action serves an administrative purpose (i.e., to preserve the efficiency of the NRC's licensing processes with respect to the environmental impacts of continued storage) and an administrative need (i.e., to provide processes for the NRC to use in NRC licensing to address the environmental impacts of continued storage), it necessarily follows that any alternatives would also be administrative in nature. Moreover, only a binding rule preserves the efficiency of the NRC's licensing processes. However, the NRC includes other processes that the NRC could use to address the environmental impacts of continued storage as options that the NRC could pursue in the case of no action. Each of these options would result in insignificantly different environmental impacts. In Section 1.6.3 of the GEIS, the NRC notes that the environmental impacts of the proposed action and NRC's options under the no-action alternative—which, as the comment notes, are all administrative in nature—are not significant.

The comment does not express disagreement with the reasons the NRC did not address the environmental impact costs and benefits in the analysis in Chapter 7, but instead characterizes the resulting analysis as atypical. The NRC believes that the Chapter 7 analysis is appropriate for capturing and comparing the costs and benefits of alternatives associated with this rulemaking because NEPA requires a balancing of the benefits and costs of the proposed action and alternatives, and because the differences between the proposed action and the NRC's options in the case of no action are not environmental in nature.

With respect to past or sunk costs, the comment correctly points out that (1) Section 7.1 of the draft GEIS stated that the NRC projects the costs of each alternative (note that in the final GEIS, the draft GEIS alternatives are now characterized as the NRC's options in the case of no action) from fiscal year 2015 to 2044 and (2) the proposed action and the NRC's options in the case of no action, excepting the site-specific review option, include development of the GEIS, which is scheduled to be accomplished prior to 2015. The NRC disagrees that the costs of developing the GEIS should not have been included in the analysis because including the costs provides a transparent and complete disclosure of the relative costs of the proposed action and the NRC's options in the case of no action. Because not including the 2013 and 2014 costs would give the appearance of no cost for the proposed action, inclusion of these in the cost comparison of Appendix H and Chapter 7 provides a more complete estimate. While the 2013 and 2014 costs are, in effect, sunk costs, development of the GEIS and Rule in response to the Court of Appeals' remand does not preclude the Commission from selecting any of the options under the no-action alternative. Most importantly, inclusion of costs that have already been incurred would not result in the NRC reaching a different conclusion than it would if it removed those costs; inclusion of previously incurred costs merely reduces the net financial benefit that the proposed action provides over all of the NRC's potential options in case of no action. However, to address the comment's concern, the GEIS has been revised to include additional text in Chapter 7 and Tables H-4 to clarify where 2013 and 2014 costs may be considered previously incurred costs. No changes were made to the Rule as a result of this comment.

(473-1-12)

D.2.15.2 – COMMENT: The NRC received several comments on the considerable costs of litigation related to nuclear waste storage and disposal, many of which recommended inclusion of the costs of litigation in the GEIS cost considerations. One commenter noted the significant sums associated with cost recovery of continued at-reactor storage, asserting that further litigation and awards would result in even higher sums. Two commenters noted the costs of supplemental EISs in addition to litigation. A commenter stated the belief that "costs" of litigation do not justify dismissal of the no-action alternative, because the licensee will pass the costs of application review and litigation onto the ratepayers, who are not necessarily aware of how the decisions made by the licensee or how the Rule affects their community. The commenter stated that the ratepayers expect their fees to fund a repository and thorough site-specific reviews, and that the cost savings of the proposed action should not serve as legal shield to prevent site-specific litigation.

RESPONSE: The NRC agrees in part and disagrees in part with the comments regarding litigation costs related to waste storage and disposal. The NRC recognizes the concerns about the current and future burden placed on taxpayers that results from DOE's failing to remove spent fuel from reactor sites as specified in DOE's contracts with power plant owners and operators. In addition, the NRC recognizes that some taxpayers and ratepayers would prefer

that the collected funds be spent to fund a repository rather than to reimburse licensees for storage costs. However, until DOE satisfies its contractual obligations, these burdens will exist irrespective of which alternative is selected. Therefore, the NRC disagrees with the comment that the expenses associated with cost recovery should be included in the GEIS.

Chapter 7 of the GEIS includes some of the costs associated with site-specific litigation of generic continued storage issues (although not, for the reasons stated in the previous paragraph, the cost-recovery issues raised in the comment) along with the costs of supplemental EISs and inclusion of continued storage in ongoing and new site-specific reviews. However, the comments correctly note that all site-specific litigation costs are not included in the quantitative cost estimates. Moreover, because all litigation costs are not quantified, Section 7.6 of the GEIS includes site-specific litigation costs as part of the unquantified costs. The GEIS notes that these costs may be large and are difficult to quantify because they vary significantly and are case- and fact-dependent. The GEIS includes a quantitative assessment of the cost of supplemental, existing, and new reviews, which includes some litigation support costs, within the context of the 30-year timeframe of the cost-benefit analyses.

As described in Chapter 7, the cost-benefit analysis is only one of the factors that informs the NRC's decision regarding which alternative to implement. The NRC has identified that one of the benefits of the proposed action is efficiency—and attendant cost savings—that would be gained from a generic, rule-based approach rather than site-specific reviews. The analysis in Chapter 7 focuses on the cost and benefit distinctions between the proposed action and the options under the no-action alternative regardless of who bears the burden of this cost, and the cost of site-specific litigation is one such distinction. Therefore, the NRC disagrees with the comment's suggestion that the cost of site-specific litigation is not an important factor in considering whether to implement the proposed action or an option under the no-action alternative because the licensee will pass this and other costs onto the ratepayers. The NRC acknowledges that some ratepayers believe that the money should be spent on site-specific reviews of continued storage rather than on a GEIS. The NRC considers this a statement in support of the options under the no-action alternative, each of which allows for site-specific reviews. The NRC's responses addressing comments on the various no-action alternative options are discussed in Section D.2.11 of this appendix. In addition, the NRC acknowledges that despite its best efforts, some ratepayers may not be aware of how the Rule affects their communities. The NRC's public involvement efforts included, but were not limited to, scoping as described in Section 1.7.1 of the GEIS, along with the public comment period for the draft GEIS and proposed Rule as described in Section D.1 of this appendix and also in Appendix C. Insofar as the comment asserts that some ratepayers may not be aware of how decisions made by licensees affect their communities, these matters are outside the scope of this rulemaking. No changes were made to the GEIS or Rule as a result of these comments.

(484-6) (529-3) (611-21) (619-1-10)

D.2.15.3 – COMMENT: One commenter stated that the GEIS does not include a discussion of the intergenerational impacts of accidents and the associated discounting methods over the long-term and indefinite timeframes. The commenter notes that because the GEIS does not account for costs of environmental impacts of accidents or high-consequence events, it does not include discussion of discounting impacts to estimate a present value over time. The commenter states that the GEIS discount rates are consistent with the U.S. Office of Management and Budget recommendations over the short timeframe, but that the Office of Management and Budget recommends lower discount rates over intergenerational timeframes due to consideration of the well-being of future generations and uncertainty. The commenter stated that not using a declining discount rate calls into question how the NRC concludes that environmental impacts are SMALL across all alternatives, scenarios, and sites.

RESPONSE: The NRC agrees in part and disagrees in part with the comments about the inclusion of the intergenerational impacts of accidents and the associated discounting methods over the long-term and indefinite timeframes in the GEIS. The NRC agrees that comparing benefits and costs across generations can vary from other types of cost-benefit analyses. The NRC disagrees that the GEIS cost-benefit analysis should include the intergenerational impacts of accidents. The analysis in Chapter 7 focuses on the cost and benefit distinctions between the proposed action and the options under the no-action alternative over a 30-year time span, rather than over intergenerational periods. Moreover, the proposed action and the NRC's options in the case of no action are administrative approaches to considering the environmental impacts of continued storage and therefore do not differ in terms of impacts that may result from accidents.

Section 7.0 of this GEIS explains that the analysis does not include the costs or benefits of the environmental impacts of continued storage, which includes accidents, because continued storage is an activity that may occur regardless of the process that the NRC selects to consider the environmental impacts of continued storage. Under each of the no-action options and under the proposed action, the NRC considers in its licensing reviews an analysis of the environmental impacts of continued storage. Because the proposed action serves an administrative purpose and need, it necessarily follows that the other reasonable options to serve that need would also be administrative in nature and have similarly insignificant environmental impacts.

In Section 7.1 of the GEIS, the NRC describes the 30-year timeframe that it used for the cost-benefit analysis based on the example provided in guidance from the Office of Management and Budget (OMB 2003), which is the same as the approximate cumulative period for which all previous versions of the Rule existed. Insofar as the comment states that the approach used by the NRC is consistent with best management practices for Federal agencies as described by the Office of Management and Budget (OMB 2003), the NRC acknowledges the statement. Because the cost-benefit analysis in the GEIS examines a 30-year timeframe and because environmental impacts of the proposed action do not differ from those of NRC's options under

the no-action alternative, the GEIS does not need to include the types of discussion and analysis suggested by the comment (e.g., discussing discounting impacts to estimate a present value over time or using lower or declining discount rates) to address the environmental impacts of accidents over the long-term and indefinite timeframes.

Insofar as the comment questions how the NRC concludes that environmental impacts are SMALL across all alternatives, scenarios, and sites, Sections 4.18, 5.18, and 6.4.17 of the GEIS address the environmental impacts of accidents including NRC's impact magnitude conclusions. The NRC response to requests to include cost in the accident impact magnitude determination in the GEIS is discussed in Section D.2.35.34 of this appendix. In addition, Sections 4.3, 5.3, and 6.4.3 of the GEIS address environmental justice. The NRC response to requests to include intergenerational equity in the GEIS is discussed in Section D.2.23.6 of this appendix. No changes were made to the GEIS or Rule as a result of this comment.

(473-2-2) (473-2-3) (473-2-4)

D.2.15.4 – COMMENT: Several commenters disagreed with the use of public-perception costs and benefits in the GEIS. Citing examples of how viewpoints might differ, the commenters stated that public perception should not be included because the costs and benefits are speculative, subjective, and different among stakeholders. Two of the commenters noted that avoidance of such speculation is consistent with the approach in the DOE Yucca Mountain EIS. One commenter stated that public perception is too far removed from the physical environment to be an appropriate consideration in NEPA reviews. Two commenters stated that it is inappropriate for the NRC, as a regulatory body, to speculate on public perception and for the NRC to decide which group's perception is credited with a cost or benefit. These commenters also stated that public opinion surveys reveal that a majority of the public favors nuclear power as one of the ways to produce electricity.

RESPONSE: The NRC agrees in part and disagrees in part with the comments about the inclusion of public-perception costs and benefits in the GEIS. The NRC agrees with the comments that costs and benefits should be discussed in the GEIS in a manner that (1) provides a basis for the factors included in the analysis, (2) avoids speculation regarding public opinion, and (3) acknowledges varying stakeholder perspectives. As stated in Section 7.0 of the GEIS, the proposed action and options under the no-action alternative for this GEIS do not vary in environmental impacts, but rather in the approach that NRC could apply to future licensing activities to address potential environmental impacts of continued storage. As described in Section 7.6 and Table H-5 of the GEIS, the proposed action differs from the options under the no-action alternative in that the proposed action conclusively addresses the environmental impacts of continued storage without site-specific reviews of continued storage and precludes the ability to challenge an applicant's or the NRC's consideration of the impacts of continued storage without a waiver, which is a well-documented topic of concern to some members of the public, as discussed elsewhere in Section D.2.15. Public perception is included as an

unquantified cost in the cost-benefit analyses because—contrary to assertions that public perceptions are speculative—there is a substantial record of public interest and concern throughout scoping and in the comments on the draft GEIS and proposed Rule regarding how site-specific reviews will be addressed in the context of a binding rule. Section 8.6 of the GEIS acknowledges that perceptions vary among stakeholders regarding whether use of the GEIS and Rule to improve efficiency in reviewing environmental impacts of continued storage in site-specific licensing actions or being able to challenge the consideration of these impacts without a waiver are classified as costs or benefits. However, the NRC recognizes that the presentation of this information in Table 7-6 conveys the most common perspective on this topic. Chapter 7 of the GEIS has been updated to indicate that NRC received alternative perspectives.

Chapter 7 of the GEIS addresses whether site-specific reviews for continued storage will be conducted and whether the impact conclusions can be challenged without a waiver in the summary of unquantified costs and benefits. For some who commented on the GEIS, the absence of the ability to challenge impact conclusions without a waiver was a cost. For others, this was a benefit, although it is a benefit that is consonant with efficiency, a factor that the NRC considered throughout its cost-benefit analysis.

The NRC disagrees with one comment's statement that public perception should not be included in NEPA reviews based on a court case in which alleged psychological impacts were considered too far removed from the physical environment of a nuclear facility to require consideration under NEPA. Here, the sections of the GEIS to which this comment relates are not associated with alleged impacts—as occurred in the court case—but with whether consequences of selecting among alternatives are classified as either costs or benefits.

One comment cited public support for nuclear power as an electricity generation option as a benefit of the proposed action, but the purpose of the GEIS is to determine the environmental impacts of continued storage and determine whether impacts can be generically analyzed. The purpose is not to analyze various means of electricity generation, an issue that can be addressed in site-specific licensing proceedings for new-reactor licensing and reactor license renewal (see Section D.2.14.9 of this appendix for the NRC's response to comments that assert that the NRC should address the environmental impacts of other forms of power generation in the GEIS).

To address the concerns expressed in these comments and to acknowledge the varying perspectives of stakeholders, a clarification was made in Table 7-6 of the GEIS to note both perspectives. Sections 7.3, 7.4, 7.5, and 7.6 of the GEIS have been revised to reflect the change in language. No changes were made to the Rule as a result of these comments.

(544-30) (827-5-1) (942-6)

D.2.16 Comments Concerning GEIS Assumptions and Analysis

D.2.16.1 – COMMENT: One commenter asserted that a draft NRC report related to an earlier NRC study about the assumptions for an EIS related to a long-term waste confidence update should be withdrawn because it violates NEPA and because the NRC's decision to issue it without publishing a notice in the *Federal Register* is inconsistent with the agency's own policy on open government.

RESPONSE: The NRC disagrees with this comment. The comment relates to a report published by the NRC in 2011 (NRC 2011b) as part of a long-term effort to develop a basis for a future update to the Rule. This report is not part of the current proceeding, was not considered by the NRC in preparing the GEIS, and is outside the scope of the current action. No changes were made to the GEIS or Rule as a result of this comment.

(954-1)

D.2.16.2 – COMMENT: One commenter stated that the description of the affected environment in the GEIS needs to be expanded. The commenter expressed concern regarding potential downstream impacts resulting from accidental releases of irradiated nuclear fuel to air or water. The commenter asserted that both water and air impacts could travel large distances, impacting the food chain, and would persist for many generations.

RESPONSE: The NRC disagrees with this comment. The GEIS provides a thorough description of potentially affected resources, including ground and surface waters, terrestrial and aquatic species and habitats, and sources of public radiation dose due to natural and artificial sources other than spent fuel. The draft GEIS provided an assessment of public health impacts of storage facilities from both routine operations and accidents. The draft GEIS concluded that public health impacts from routine operations are being maintained well below regulatory dose limits and can be maintained below dose limits throughout the short-term, long-term, and indefinite storage timeframes. The draft GEIS analysis of accidents concluded that storage systems are designed to withstand all postulated design basis accidents with no loss of safety functions and that the risk from severe accidents in storage systems is small. No changes were made to the GEIS or Rule as a result of this comment.

(919-4-16)

D.2.16.3 – COMMENT: One commenter stated that the NRC should clarify which impacts would not be considered as part of a site-specific evaluation of an away-from-reactor ISFSI license application.

RESPONSE: The NRC agrees with the comment. An EIS for the licensing of an away-from-reactor ISFSI would evaluate the environmental impacts of building and operating the facility,

including the impacts of moving spent fuel from reactors to the away-from-reactor ISFSI. See, as an example, the EIS for the PFSF (NUREG–1714, NRC 2001a). The analysis would incorporate the impacts of continued storage of spent fuel beyond the licensed life of the away-from-reactor ISFSI as determined in the GEIS (NUREG–2157). Section 5.0 of the GEIS has been revised to provide this clarification. No changes were made to the Rule as a result of this comment.

(579-8)

D.2.16.4 – COMMENT: One commenter stated that the NRC could have used various methods to better forecast future conditions and alternatives, including the case study method and general morphological analysis. The commenter stated that an array of analysis techniques would be more likely to be valid and reliable compared to a generic methodology. The commenter stated that the GEIS could have examined future alternatives by using the case study method to extrapolate from similar cases, using actual data, and then applying that data at other locations. The commenter acknowledged that the NRC tried to apply this approach in the GEIS by relying on existing environmental studies; however, the commenter claimed that NRC used a complete abstraction of the available information in developing the GEIS analysis. The commenter identified a number of advantages of the case study method and cited a number of claimed deficiencies in the NRC's conduct of its analysis. The commenter identified general morphological analysis as another analytical approach that could have been used for predicting future impacts of spent fuel storage. The commenter described the key aspects of this technique. The commenter stated that the NRC could have used this technique to assess various timeframes and institutional controls. The commenter asserted that better results could be achieved using two or more methodologies, where each methodology could cover the shortcomings of the others.

RESPONSE: The NRC disagrees with these comments. While the comments describe other approaches to the analysis that could have been used, and indicate perceived weaknesses in the approach used by the NRC, the comments do not show that the approach used by the NRC resulted in a deficient analysis of the environmental impacts of continued storage. Further, the NRC's approach has been used successfully in previous GEISs. The NRC continues to find that the approach it used in the analysis is valid and that the results achieved provide decisionmakers with a reasonable characterization of the impacts of continued storage over the three timeframes.

For additional information related to institutional controls, see Section D.2.19.1 of this appendix. No changes were made to the GEIS or Rule as a result of these comments.

(867-1-1) (867-1-10) (867-1-11) (867-1-12) (867-1-13) (867-3-30) (867-3-31)

D.2.16.5 – COMMENT: One commenter stated that the GEIS does not describe information and data gaps and their importance to the environmental analysis. The commenter stated that

critical data gaps could result in meaningful uncertainty, which should be explicitly identified in the analysis results. The commenter stated that the GEIS failed to evaluate the consequences of these gaps on the analysis and conclusions.

RESPONSE: The NRC disagrees with the comment. The NRC acknowledges that the GEIS should identify significant unknowns, and the GEIS does so. One significant unknown is when a repository will become available. This issue is addressed in the GEIS using the three timeframes. Other unknowns are addressed using assumptions (see Section 1.8.3 and Chapter 5 of the GEIS). The NRC makes assumptions that it considers reasonably conservative—in other words, the assumptions used in the analysis are sufficiently conservative to bound the impacts such that variances that may occur from site to site are unlikely to result in environmental impact determinations that are greater than those presented in the GEIS. The assumptions made by the NRC address the unknowns that could have a measurable effect on the outcome of the analyses.

In some cases, even with the use of assumptions, significant uncertainties remain. For example, site-selection for an away-from-reactor ISFSI creates uncertainty for many resource areas. However, there is also some uncertainty associated with predicting impacts that occur in the distant future. This is particularly true for the evaluation of the impacts to historic and cultural resources in the long-term and indefinite timeframes. The NRC recognizes that there is uncertainty associated with the degree of prior disturbance and the resources, if any, present in areas where future ground-disturbing activities (e.g., initial and replacement DTS and ISFSI) could occur. The NRC cannot eliminate the possibility that historic and cultural resources would be affected by construction activities during the long-term and indefinite timeframes because the initial ISFSI could be located within a less-disturbed area with historic and cultural resources in close proximity. Further, resources may be present that would not have been considered significant at the time the initial or replacement facilities were constructed, but could become significant in the future. As a result, the impacts to these resources are shown as SMALL to LARGE for the long-term and indefinite timeframes for at-reactor ISFSIs and for all timeframes for the away-from-reactor ISFSIs. These conclusions reflect the fact that the resources that might be affected are unknown at this time. For additional information related to this issue, see Section D.2.38.16 of this appendix. No changes were made to the GEIS or Rule as a result of this comment.

(898-2-5)

D.2.16.6 – COMMENT: A commenter argued the NRC did not follow the Court of Appeals' decision in *New York v. NRC* by not developing a bounding analysis for spent fuel fires. The commenter noted that by failing to account for the differences between spent fuel pool sites and the effects of those differences on the impacts of an accident, the GEIS failed to perform a conservative bounding analysis. The commenter argued that administrative convenience or tradition did not justify use of obsolete or inapplicable information. They commenter suggested

site-specific characteristics for the configuration of spent fuel pool and seismicity were also crucial to a conservative bounding analysis and should be corrected in the GEIS.

The commenter also noted the Court of Appeals found that a comprehensive general analysis of risks was sufficient; however, the commenter asserted the NRC failed to employ conservative bounding assumptions in examining the impacts of spent fuel pool leaks. As an example, the commenter noted that the GEIS conclusion that groundwater impacts would be SMALL rests on the NRC finding that hydrologic characteristics associated with typical nuclear power plant settings would act to impede the offsite migration of future spent fuel pool leakage. The commenter argued that reliance on the characteristics of typical nuclear plants did not result in a conservative estimation of the impacts of leaks. The commenter argued such an analysis provided no sense of the groundwater impacts at a plant lacking typical hydrologic characteristics. The commenter suggested that while the NRC stated that leaks at sites with different hydrological conditions could have the potential to affect nearby groundwater users, the GEIS concluded that in the unlikely event that contamination exceeded maximum contaminant level for a groundwater source, the EPA could take emergency action under the Safe Drinking Water Act. The commenter suggested the GEIS did not state which plants lack the typical hydrologic characteristics, what combination of hydrologic characteristics could lead to groundwater contamination, or what the expected groundwater impacts could be (aside from exceeding drinking-water standards). The commenter argued the NRC must conduct a conservative bounding analysis that takes a detailed look at the impacts at plants lacking typical hydrologic characteristics (e.g., plants where there are nearby groundwater users of shallow groundwater aquifers).

The commenter offered similar arguments as to why the examination of surface-water impacts in the GEIS lacked conservative bounding assumptions. The commenter noted that while the GEIS acknowledged that a leak could result in indirect effects on surface-water quality due to groundwater contamination, the analysis concluded that the effects would be SMALL because the contaminated groundwater would be diluted by the large volume of surface water. The commenter argued that contrary to the NRC's approach, impacts to surface waters should be bounded by sites that are different in character. For example, the commenter cited Vermont Yankee's upstream location from a dam where the commenter believed contaminated sediment accumulated. The commenter noted the GEIS also stated that even if a pool leaked into surface waters continuously, the quantities of radioactive material would be comparable to quantities associated with permitted, treated effluent discharges from plants. However, the commenter asserted that the NRC failed to examine the combined impact of a leak and effluent discharges on sensitive surface waters, including whether State or Federal water-quality standards could be violated.

The commenter also argued the GEIS did not employ conservative bounding assumptions to determine the impacts of leaks on soils. They suggested such an analysis would have looked at the impacts at sites in agricultural areas. The commenter recommended, at a minimum, that the

NRC must include such conservative bounding assumptions if it is to conduct a generic analysis of the risks of spent fuel pool leaks; however the commenter further noted that the findings of the GEIS indicated that generic analysis is not appropriate for spent fuel pool leaks.

RESPONSE: The NRC disagrees with the comments. The assumptions used by the NRC in the GEIS provide reasonable predictions to support the NRC's analysis of the environmental impacts associated with the continued storage of spent fuel. The assumptions used in the analysis are sufficiently conservative to bound the impacts such that variances that may occur from site to site are unlikely to result in environmental impact determinations that are greater than those presented in the GEIS.

The NRC performed its analysis of the environmental impacts of spent fuel pool leaks and fires by considering the impacts at both typical and atypical locations. For example, Section E.2.1 of the GEIS discusses the typical hydrologic characteristics at nuclear power plant sites. In most cases, contamination from a spent fuel pool leak would remain onsite, or be directed to a nearby surface waterbody. Although unlikely, contamination from a spent fuel pool leak could impact an offsite groundwater receptor. Section E.2.2 addresses the impacts of leaks, including such an unlikely scenario.

For its analysis of leaks, the NRC assumed the existence of a nearby waterbody of sufficient size to provide the amount of cooling water required by a nuclear plant. Because a plant must have such a cooling-water source, the assumption is reasonable and provides the basis for the NRC's analysis of impacts. In addition, the NRC Groundwater Task Force concluded that the NRC is accomplishing its mission of protecting public health, safety, and the environment through its response to groundwater leaks and spills (NRC 2006a). That Task Force evaluation included leaks that had occurred at plants surrounded by agricultural areas. On the issue of combined impacts of effluents and spent fuel pool leaks, as discussed in Section E.2.2.2, in the unlikely event that a spent fuel pool leak were to flow continuously to a local surface waterbody, the quantities of radioactive material discharged would be comparable to permitted, treated effluent discharges from operating nuclear power plants, which are typically well below Federal and State regulatory limits. Routine effluent discharges to a surface waterbody would stop once a reactor has shut down. Further, the impacts of contamination discharged to a surface waterbody after shutdown are expected to be non-detectable (NRC 2002a). As a result, the combined impacts of a spent fuel pool leak and effluents discharged to a surface waterbody would not be expected to exceed any Federal or State water-quality standards. For additional information on issues related to spent fuel pool leaks, see Sections D.2.40.6 and D.2.40.15 of this appendix.

Appendix F of the GEIS provides a detailed discussion of spent fuel pool fires. Section F.1.2 contains a number of reasons why the NRC's analyses are conservative in nature. For additional information regarding spent fuel pool fires, see Sections D.2.39.2, D.2.39.4, D.2.39.5, D.2.39.6, and D.2.39.23 of this appendix, and for additional information regarding accidents and

natural events, see Section D.2.35.3 of this appendix. No changes were made to the GEIS or Rule as a result of these comments.

(473-13-10) (473-15-4) (473-13-5) (473-15-5) (473-15-6)

D.2.16.7 – COMMENT: One commenter stated that aging management for the spent fuel pool should be an ongoing process and should be continued into the short-term timeframe to ensure early detection and repair of leaks.

RESPONSE: The NRC agrees with the comment that activities to ensure the integrity of the spent fuel pool should be carried out both during facility operation and during the short-term timeframe. As noted in Appendix E of the GEIS, under the Maintenance Rule (i.e., 10 CFR 50.65), licensees are required to monitor the performance or condition of structures, systems, and components associated with the storage, control, and maintenance of spent fuel in a manner sufficient to give reasonable assurance that structures, systems, and components are capable of fulfilling their intended functions. Further, licensees are required to take appropriate corrective action when the performance or condition of a structure, system, or component does not conform to established goals. All licensees have specific aging management programs to inspect, monitor, detect, and trend the aging of spent fuel pool structures. These requirements are applicable throughout the life of the facility license, from operation through decommissioning. No changes were made to the GEIS or Rule as a result of this comment.

(920-2)

D.2.16.8 – COMMENT: Several commenters expressed concern about the assumption of repackaging spent fuel every 100 years. One commenter raised concerns regarding the costs of repeatedly replacing dry casks. One commenter stated that there is no basis for assuming that fuel can be transferred without damaging embrittled fuel cladding or that technology will be available to safely transfer fuel over extended timeframes. One commenter asserted that the Fukushima Dai-ichi accident showed that spent fuel will degrade with age and will cause degradation of the storage canisters and stated that this degradation makes the assumption regarding periodic replacement of storage systems deficient. One commenter cited problems experienced with existing spent fuel storage containers at a nuclear plant site as evidence that the assumption of a 100 year replacement interval is unrealistic. Another commenter supported specific safety requirements for dry cask storage. These proposed requirements included locating casks at higher elevations to avoid flooding and exposure to corrosive elements, outfitting casks with temperature and radiation monitors, placing casks in buildings for protection from storms and attacks, and requiring offsite emergency planning. This commenter also stated that the assumption of a 100-year replacement interval for the casks was inconsistent with cask license and renewal timeframes. Two commenters stated that the NRC should not assume that after 100 years an ISFSI will be replaced, but should instead assume the spent fuel is moved to another location. They state that ISFSIs should not continue to operate for more than 100 years

and the canisters should instead be transported to a more appropriate area. One commenter stated that the GEIS needed to demonstrate that replacement functions could actually be performed, and that the costs for such replacement functions be specified and accounted for. Another commenter stated that the NRC should have referred to manufacturers' analysis or warranty on the useful life of the casks to support the conclusions in the GEIS.

RESPONSE: The NRC disagrees with the comments. The NRC believes the 100-year replacement interval represents a reasonably conservative assumption such that the variances in the environmental impacts of replacement that may occur between sites are unlikely to result in environmental impact determinations that are greater than those presented in the GEIS. Appendix B of the GEIS describes the design of storage casks and national and international experience that supports the assumptions about longevity of dry storage casks. Current information supports low degradation rates for dry cask storage systems. The NRC considered the experience with dry cask storage systems, information related to certification and regulatory oversight of dry cask storage systems, and monitoring and maintenance of dry cask storage systems to provide an informed basis for understanding the behavior of these systems and estimating an assumed replacement interval for the GEIS.

The operating experience referenced and considered in the GEIS includes problems encountered with existing dry cask storage systems and subsequent corrective actions to address these issues. Regarding licensing terms, as noted in Appendix B, the current regulatory framework for dry storage of spent fuel allows for multiple license renewals. The NRC does not believe that consideration of manufacturers' analyses or warranties would add further significant information beyond what has already been considered for estimating the behavior and longevity of dry cask storage systems. The NRC is unaware of any information related to the Fukushima accident that raised issues with respect to spent fuel or storage canister degradation.

The GEIS and Rule do not impose any additional regulatory requirements with respect to dry casks. Rather, the Rule codifies the NRC's analysis of the generic environmental impacts of continued storage to satisfy a portion of the agency's NEPA obligations.

Damaged fuel issues are addressed in Sections D.2.17.4 and D.2.38.8 of this appendix. Further information regarding fuel degradation rates is provided in Sections D.2.38.19 and D.2.38.16 of this appendix. Comments related to demonstrating that replacement functions can actually be performed are addressed in Section D.2.17.1 of this appendix. Additional information regarding safety, hardened storage, and emergency planning for dry cask storage is located in Sections D.2.50.5, D.2.38.5, and D.2.44.2 of this appendix. No changes were made to the GEIS or Rule as a result of these comments.

(30-4-2) (30-4-4) (89-10) (127-2) (329-11-1) (329-20-1) (556-5-7) (556-5-8) (608-15) (681-1) (693-4-10) (783-2-10) (783-1-11) (783-3-20) (836-54) (930-3-6)

D.2.16.9 – COMMENT: Three commenters stated they disagreed with the assumption in the GEIS that an ISFSI of sufficient size to hold all spent fuel generated by a reactor will be constructed during the reactor's licensed life for operation. Two commenters referred to the San Onofre nuclear plant, which did not have an ISFSI of sufficient size when the owners decided to cease operation, as an example of why the assumption is invalid. The commenters suggested that the NRC change the assumption to read, "An ISFSI of sufficient size to hold all spent fuel generated will be constructed during the licensed life for operation and decommissioning time (60 years)." The commenters also questioned the need for this assumption.

RESPONSE: The NRC disagrees with the comments. The NRC considers this assumption to be a reasonable representation of the timing for the construction of the ISFSI that will be needed to store the fuel generated by a future reactor during its lifetime. As used in the GEIS, the term "licensed life for operation" of a reactor or ISFSI is the period running to the end of the operating license term for a reactor or the end of the license term for an ISFSI (including any license renewals). As pointed out in some of the comments, Units 2 and 3 at the San Onofre Nuclear Generating Station were shut down early (in 2013). However, the operating licenses for these two units do not expire until 2022. As the term "licensed life for operation" is defined in the GEIS, the end of licensed life for operation for these two units is 2022.

In the GEIS, the NRC assumes that the licensed life for operation for a reactor includes a 40-year operating license and two 20-year license renewal terms. As discussed in the GEIS, Section 1.8.3, the NRC expects that some fuel will need to be moved from the spent fuel pool into casks before the end of the initial 40-year license because of the limited capacity of the pools. Therefore, casks and pads will be constructed over a period of time to accommodate the spent fuel and the NRC believes the full ISFSI (i.e., pads) will be in place by the end of licensed life.

Section 1.0 of the GEIS was modified as a result of these comments to clarify the meaning of the term "licensed life for operations". No changes were made to the Rule as a result of these comments.

(827-7-19) (836-36) (836-40) (930-2-10) (930-2-14)

D.2.16.10 – COMMENT: A commenter stated that it was incorrect for the NRC to assume that all spent fuel will be removed from the spent fuel pool and the pool decommissioned by the end of the short-term timeframe. The commenter stated that the regulations at 10 CFR 50.82(a)(3) allow the Commission to extend the time allowed to complete decommissioning, with "unavailability of waste disposal capacity" being one of the factors to be considered when reviewing such a request. The commenter argues that, with no repository currently available, it is likely that some licensees would seek approval to delay decommissioning, including the option to maintain an existing spent fuel pool. The commenter, referencing the discussion of decommissioning options in the Decommissioning GEIS, further stated that the NRC has

previously contemplated storage in spent fuel pools for up to 100 years after shutdown in the context of the ENTOMB decommissioning option. Further, the commenter stated that the draft GEIS ignored the ENTOMB option and only considered DECON and SAFSTOR for spent fuel pools. The commenter stated that the NRC should include an analysis of storage in a spent fuel pool beyond the 60-year short-term timeframe, or revise the Rule language to "limit the prediction of environmental impacts to only 60 years."

RESPONSE: The NRC agrees in part and disagrees in part with the comment. While the comment is correct to note that the regulations at 10 CFR 50.82(a)(3) allow the Commission to extend the time allowed to complete decommissioning and that "unavailability of waste disposal capacity" is one of the factors to be considered, requests will only be granted on a case-by-case basis, and only after licensees have demonstrated that an extended decommissioning is necessary to protect public health and safety. The NRC disagrees with the comment's position that it is incorrect to assume that all spent fuel will be removed from the spent fuel pool prior to the end of the short-term timeframe. Further, the NRC disagrees that the GEIS should include an analysis of spent fuel pool storage beyond the short-term timeframe.

The comment is correct to note that the NRC considered timeframes of up to 100 years after shutdown in its consideration of the ENTOMB decommissioning option. However, the comment is incorrect that the NRC contemplated storage in a spent fuel pool for up to 100 years. As described in NUREG–0586, Supplement 1, the NRC considered two ENTOMB scenarios, designated ENTOMB1 and ENTOMB2, designed to "envelope a wide range of potential options by describing two possible extreme cases of entombment" (NRC 2002a). As explained in NUREG–0586, Supplement 1, both options assumed that spent fuel "would be removed from the facility and either transported to a permanent HLW repository or placed in an onsite ISFSI" (NRC 2002a). Further, while the industry has expressed interest in having ENTOMB as a decommissioning option, as noted in SECY-02-0191, no licensees have committed to using it (SECY-02-0191, NRC 2002b).

The NRC disagrees that the draft GEIS ignored the ENTOMB option and only considered DECON and SAFSTOR for spent fuel pools. The ENTOMB decommissioning option is described in Section 2.2.1.1. While the NRC disagrees with this comment, the discussion of decommissioning options in Section 2.2.1.1 was revised to provide additional information, including the status of the spent fuel pool, for the ENTOMB option. In addition, Section 2.2.1.2 of the GEIS was revised to clarify that spent fuel would be removed from the pool, regardless of the decommissioning option selected.

Finally, the NRC disagrees with the comment that, with no repository currently available, it is likely that some licensees would seek approval to delay decommissioning, including the option to maintain an existing spent fuel pool. Historically, all licensees of permanently shutdown reactors that are not colocated with an operating reactor have transferred, or are in the process of transferring, all spent fuel to an ISFSI. More recently, the licensees for the Kewaunee and

Crystal River reactors have submitted decommissioning plans indicating their intent to have all spent fuel transferred to an ISFSI within approximately seven years of permanent cessation of operation (DEK 2013a; DEF 2013). The NRC expects that this will continue to be the case in the future, as licensees balance regulatory and financial incentives to decommission facilities in a timely manner.

With the exception of revisions to Section 2.2.1 as noted above, no changes were made to the GEIS or Rule as a result of these comments.

(473-12-7) (897-6-10) (897-6-11) (897-4-25) (897-6-8)

D.2.16.11 – COMMENT: Two commenters contested the lack of site-specific information related to any operating nuclear power plant in the GEIS and the lack of forecasts of the impacts of indefinite storage at specific geographic locations near any nuclear power plant. One commenter claimed that the GEIS failed to assess any genuine condition of the environment and did not assess impacts due to failure to site a repository.

RESPONSE: The NRC disagrees with the comments. The GEIS satisfies a portion of the NRC's NEPA obligations related to the issuance of a reactor or spent fuel storage facility license by generically evaluating the environmental impacts of continued storage. Prior to the completion of an individual licensing action, the NRC will conduct a site-specific environmental review and document the results of that review in an EA and FONSI or EIS. The GEIS also specifically addressed the potential impacts if a repository is delayed (the long-term timeframe), or is never built (the indefinite timeframe). These impacts would occur at the reactor sites or at the site of any away-from-reactor storage facility that might be built. No changes were made to the GEIS or Rule as a result of these comments.

(867-2-3) (919-3-8)

D.2.16.12 – COMMENT: Several commenters stated either that the NRC needed to evaluate the environmental consequences of failing to site a repository, or that the NRC's evaluation of the consequences of failing to site a repository was inadequate. Some commenters pointed out that there is no repository currently available and expressed the belief that the availability of a repository was not reasonably foreseeable. One commenter stated that the NRC should evaluate the consequences of the case that a repository was unable to "effectively contain radioactivity." One commenter stated that the NRC should evaluate the likelihood that a repository will be successfully sited and then evaluate the consequences of accidents related to the repository. One commenter expressed concern that long-term storage could exceed the viability of the human species. Another commenter contended that onsite or away-from-reactor ISFSIs could become de-facto permanent surface storage facilities.

RESPONSE: The NRC disagrees with these comments. While a repository is not currently available, the GEIS explains that the NRC believes that siting a repository within 60 years is the most likely scenario.

The GEIS also addresses the environmental impacts of a failure to site a repository in its evaluation of the indefinite timeframe. Attempting to evaluate the likelihood that a repository will be successfully sited, as suggested in one of the comments, would serve no purpose that is not already served by the consideration of the three timeframes. The comment that long-term storage could exceed the viability of the human species is outside the scope of the GEIS and Rule.

At-reactor and away-from-reactor storage facilities would have to remain in operation until the fuel can be transferred to a repository. If a repository is never built (i.e., the indefinite timeframe), then the spent fuel would be stored indefinitely either in at-reactor or away-from-reactor ISFSIs. The impacts of such storage have been evaluated in the GEIS.

Finally, potential issues related to the performance of a repository are outside the scope of the GEIS because the GEIS analyzes the environmental impacts of continued storage, not the environmental impacts of, the performance of, or the consequences of potential accidents at a repository. No changes were made to the GEIS or Rule as a result of these comments.

(611-12) (622-1-12) (711-38) (919-3-18)

D.2.16.13 – COMMENT: Three commenters question the ability of the NRC to make generic determinations about spent fuel when the types of fuel being used are so variable. In particular, one commenter referred to DOE's Inventory and Description of Commercial Fuels in the U.S. (DOE 2011a) which showed how fuel types and storage differ from site to site; and asserted that it indicated potential environmental impacts would vary. As an example, the commenter cited tritium issues resulting from high-burnup fuel at reactor sites. The commenter asserted that the NRC's generic assumption makes no sense because the time spent fuel is stored in pools and casks varies from one reactor to the next. Another commenter stated that some fuels require special consideration in a prolonged storage scenario (e.g., aging effects).

One commenter stated that the NRC mistakenly projects uniformity in parameters such as heat load, aging, fissile material content, and overall biological effectiveness for various types of fuel that have different levels of burnup, decay, and damage. In addition, the commenter stated that the NRC failed to factor in the changing characteristics of waste over time.

RESPONSE: The NRC disagrees with these comments. The NRC considered the various fuel types and determined that they are sufficiently similar, following discharge from the reactor, such that separate environmental impacts based on fuel type are not necessary. Information on the characteristics of low-burnup, high-burnup and MOX fuels (e.g., radionuclide inventories and

thermal outputs) has been added to the GEIS in Appendix I to help clarify the similarities between these fuel types. For those assessments that did consider high-burnup fuel, the GEIS describes how high-burnup fuel is considered in the analysis. The NRC knows that the fuels are not uniform and the characteristics of the various fuels (e.g., decay heat and radioactive isotopes) are considered in the licensing of each storage facility. The NRC regulatory approach to the licensing of spent fuel storage casks (e.g., limited license period) also address concerns related to the effects of aging on fuel integrity. See the requirements at 10 CFR Part 72, Subparts C and L and 10 CFR 72.42(a) in particular.

The NRC also knows that the time that spent fuel will spend in a pool before being moved into a cask will vary. However, the fuel cannot be moved into a cask until it meets the conditions specified in the certification for that cask. Therefore, the environmental impacts of the fuel stored in the cask will be within the bounds of the impacts assessed by the NRC in the certification of the cask.

The NRC requires physical protection of the spent fuel, regardless of its age or storage location. Therefore, even if the radiation levels around the stored fuel have been reduced over time, access to the fuel is restricted. See 10 CFR 73.51 and Section D.2.36.6 of this appendix.

For additional information regarding the analysis in the GEIS of various fuel types, see Section D.2.38.19 of this appendix.

As discussed above, information has been added to the GEIS in Appendix I to clarify the similarities between the various fuel types. No changes were made to the Rule as a result of these comments.

(556-1-36) (706-2-22) (711-9)

D.2.16.14 – COMMENT: Many commenters expressed general disagreement with the assumptions made in the GEIS or with the analysis of environmental impacts in the GEIS. Commenters stated that assumptions used in the GEIS analysis, including assumptions regarding repository availability, institutional controls, replacement of storage casks, funding, and staffing, were unreasonable, unsupported by analysis or evidence, unrealistic, or oversimplified. Commenters stated that the GEIS analysis relied on unsupported assumptions and incorrect information, did not consider site-specific factors, understated certain factors, did not adequately describe impacts, did not provide a complete analysis of potential impacts, and did not provide a sufficient basis for supporting claims of small environmental impacts.

RESPONSE: The NRC disagrees with these comments. These general comments are related to the assumptions used by the NRC to support the GEIS analysis, or are related to the GEIS analysis itself. Many of the comments are general in nature, while other comments broadly question the basis for various assumptions or various attributes of the analysis. The issues

raised generally in these comments were also raised in greater detail in other comments received by the NRC. The specific issues raised are addressed in responses to those comments throughout this appendix. For example, comments on repository availability, institutional controls, safety of spent fuel storage, and contentions that the GEIS does not meet NEPA requirements are addressed, respectively, in Sections D.2.37, D.2.19, D.2.38, and D.2.5 of this appendix. No changes were made to the GEIS or Rule as a result of these comments.

(23-5) (30-15-6) (163-21-1) (163-33-2) (163-7-5) (219-7) (239-1) (244-15-1) (244-14-5) (244-14-6) (244-15-8) (245-5-3) (250-5-6) (274-5) (328-3-1) (328-6-3) (329-25-2) (341-1-18) (341-1-19) (402-1) (431-2) (465-9) (473-1-1) (473-1-2) (473-16-2) (496-11) (531-1-3) (531-2-3) (531-1-5) (531-2-5) (541-2) (553-16) (553-6) (556-2-1) (556-1-11) (604-12) (608-16) (608-5) (611-30) (619-2-9) (686-2) (693-1-12) (706-4-3) (712-1) (716-24) (716-5) (718-2-14) (738-19) (757-4) (774-1) (783-3-1) (783-2-12) (783-1-14) (783-2-4) (783-2-6) (805-15) (805-6) (819-6) (820-7) (823-1) (823-6) (823-65) (823-82) (836-22) (836-38) (838-5) (860-2) (867-2-2) (867-3-20) (867-3-21) (867-3-22) (867-3-24) (867-3-25) (867-3-26) (867-3-27) (867-3-29) (867-1-3) (867-3-32) (867-2-5) (869-3) (887-5) (897-1-15) (908-2) (910-9) (916-2-3) (920-22) (930-2-12) (930-1-15) (937-2) (944-5) (951-2)

D.2.16.15 – COMMENT: Several commenters expressed concerns about the assumptions used in the GEIS. These commenters asserted a variety of concerns, including that (1) evidence or experience demonstrated that the assumptions used were faulty or lacked substantiating evidence, (2) that the assumptions were incomplete or lacked an appropriate foundation (i.e., technical or otherwise), (3) that future uncertainties render the assumptions meaningless, and (4) that the assumptions failed to account for external events and conditions as well as possible internal conditions (e.g., degradation of spent fuel). Some commenters simply disagreed with the assumptions used, asserted that the scope of the GEIS was insufficient, or claimed that the use of assumptions conflicted with the NWPA. Several commenters stated that the GEIS did not contain the full analysis ordered by the Court of Appeals in *New York v. NRC*.

RESPONSE: The NRC disagrees with these comments. The NRC reviewed the assumptions in the GEIS and concluded that the assumptions, based on current law, regulatory practices and the body of scientific and technical knowledge from which the NRC has drawn the assumptions, are reasonable. As pointed out in some of the comments, assumptions do not equate to certainty. Many of the comments raised the issue of the uncertainty of what will actually occur in the future.

The assumption of a 60-year period of short-term storage is based on the NRC's decommissioning rules as well as the NRC's technical judgment that spent fuel pools will be durable and reliable for at least 60 years beyond the licensed life for operation of the reactor (see Section 1.8 of the GEIS). It is reasonable for the NRC to draw upon its extensive licensing and regulatory experience with nuclear power reactor spent fuel pools and ISFSIs in predicting

how those facilities will continue to perform. Because NEPA analyses are by their nature forward-looking, it would be impossible to perform such analyses without making a set of reasonable assumptions. For that reason, the NRC has historically prepared its environmental review documents by formulating assumptions of future conditions, where necessary, based on the best available information. The courts have approved this methodology as NEPA-compliant (see *Baltimore Gas & Elec. Co. v. NRDC*).

The NRC acknowledges that the GEIS forecast of future storage cask performance, for example, might vary somewhat from actual performance. For example, individual casks may not require replacement for over 100 years, while some might require replacement before 100 years. However, the NRC has concluded that a timeframe for replacement of about 100 years is reasonable, based on its knowledge of the materials and physical processes affecting cask performance. Other assumptions in the GEIS are similarly based upon the NRC's technical knowledge and regulatory experience. Further, the NRC will continue to gain practical experience in its oversight of the spent fuel management and will apply any "lessons learned" to adjust its activities (e.g., inspection and other oversight) as safety and protection of the environment warrant.

Some comments questioned the ability to repackage spent fuel because of potential degradation of the fuel over time. Historical evidence shows that licensees have dealt with damaged fuel in the past. In the most extreme example, the damaged fuel from the core of Three Mile Island, Unit 2 was removed and put into storage. If this type of fuel can be successfully moved and managed, it is reasonable to assume that damaged spent fuel in casks can also be handled if necessary.

One comment indicated that the "assumption" that fuel could be stored safely onsite indefinitely conflicts with the NWPA. Although the NRC continues to believe that spent fuel can and will, in due course, be removed to a repository (see Appendix B of the GEIS), the GEIS describes the impacts of continued storage. Until a repository becomes available, spent fuel would continue to be stored at existing nuclear power plant sites after reactor shutdown and decommissioning and potentially at away-from-reactor ISFSIs. The NRC has concluded that spent fuel could be safely stored in spent fuel pools for up to 60 years after a reactor's licensed life, if necessary, and in ISFSIs during all three of the timeframes used in the GEIS. Indefinite ISFSI storage would result only if a repository does not become available and would not result from NRC's licensing actions or environmental review. However, the NRC has considered continued storage impacts if a repository did not become available in response to the Court of Appeals' remand in *New York v. NRC*.

The NRC also concludes that the analysis performed in the GEIS is responsive to the Court of Appeals' decision in *New York v. NRC*. In the GEIS, the NRC considered the environmental impacts of short-term, the long-term, and indefinite storage. As stated above, the NRC used reasonable assumptions to perform that analysis.

For issues related to the potential loss of institutional controls, see Section D.2.19.1 of this appendix. No changes were made to the GEIS or Rule as a result of these comments.

(89-9) (177-5) (244-3-3) (244-8-6) (245-27-2) (246-22-2) (250-52-4) (276-5) (341-2-12) (419-10) (430-2) (454-6) (552-1-6) (556-1-3) (556-2-6) (611-9) (693-3-1) (714-1-7) (724-5) (819-5) (820-8) (823-52) (913-6) (913-7) (919-2-14)

D.2.16.16 – COMMENT: Some commenters contested another commenter's statement that other NRC EISs cover the basic question of whether it is logical to continue to generate waste when there is no place to dispose of the waste. These commenters claim NRC and DOE EISs assume the waste problem will be solved and relegate the dangers of continued operation and mining of uranium to issues resolved by probabilistic risk assessment.

RESPONSE: The NRC disagrees with the comments. The national policy remains disposal in a geologic repository. As explained in the GEIS, spent fuel is currently being stored in spent fuel pools and ISFSIs (if available) at all commercial nuclear power plants in the United States. Although the NRC continues to believe that spent fuel can and will, in due course, be removed to a repository, the GEIS describes the impacts of continued storage. Until a repository becomes available, spent fuel would continue to be stored at existing nuclear power plant sites after reactor shutdown and decommissioning and potentially at away-from-reactor ISFSIs. Issues related to reactor operations and to mining of uranium are outside the scope of the direct and indirect impacts of continued storage. The NRC will continue to regulate the storage of spent fuel and will make regulatory changes, if and as needed, to ensure that such storage is performed safely. No changes were made to the GEIS or Rule as a result of these comments.

(616-6) (709-6) (856-6)

D.2.16.17 – COMMENT: Several commenters expressed concern about the NRC's assumption that fuel will be moved from the spent fuel pool within 60 years after licensed life ends. Commenters stated that NRC regulations do not require transfer of spent fuel from fuel pools to dry casks in any specific timeframe. One commenter considered the assumption that licensees will voluntarily move spent fuel from pools to casks to be unrealistic, both due to the cost and to NRC statements that both spent fuel pools and dry casks provide adequate protection of public health and safety. One commenter stated that spent fuel should be moved to dry casks as soon as reasonable and in no case should spent fuel remain in pools for more than 5 years. Another commenter stated that the details of and schedule for decommissioning are left up to the plant owner. Further, commenters also stated that NRC regulations permit licensees to request exemptions from requirements to complete decommissioning within a 60-year timeframe, resulting in the potential for spent fuel to be stored in wet storage pools longer than the 60-year short-term timeframe. As a result, commenters stated that there is no basis for limiting the analysis of long-term effects to dry storage.

RESPONSE: The NRC disagrees with the comments. The assumption in Section 1.8 of the GEIS that spent fuel will be transferred to casks within 60 years after the licensed life of the facility is based upon actual operating experience to date, as well as licensees' announced intentions for decommissioning facilities. Licensees of permanently shutdown reactors not colocated with an operating reactor have transferred, or are in the process of transferring, all spent fuel to an ISFSI. All shutdown reactors co-located with operating facilities have completed transfer of spent fuel from the fuel pools, or have submitted plans to complete transfer within the short-term timeframe. More recently, the licensees for the Kewaunee and Crystal River reactors have submitted decommissioning plans indicating their intent to have all spent fuel transferred to an ISFSI within approximately seven years of permanent cessation of operation (DEK 2013a, DEF 2013). The NRC expects that this will continue to be the case in the future, as licensees balance regulatory and financial incentives to decommission facilities in a timely manner.

Also, licensees are required by 10 CFR 50.54(bb) to submit written notification to the Commission for review and preliminary approval of the program by which the licensee intends to manage and provide funding for the management of all irradiated fuel at the reactor following licensed operations. In this submittal, the licensee must demonstrate that the elected actions "will be consistent with NRC requirements for licensed possession of irradiated nuclear fuel and that the actions will be implemented on a timely basis," including the 60-year deadline for decommissioning in 10 CFR 50.82(a)(3). This provision states that extensions would only be granted after licensees have demonstrated that an extended decommissioning period is necessary to protect public health and safety. No changes were made to the GEIS or Rule as a result of these comments.

(146-2) (464-3) (465-3) (473-12-12) (604-7) (607-6) (681-3) (681-5) (783-2-14) (826-15)

D.2.16.18 – COMMENT: Some commenters questioned the NRC's assumptions about future continued storage activities, citing concerns relating to continued availability of sufficient funding, staffing, and equipment. One commenter was concerned about the availability of knowledgeable employees after the nuclear power plant is shut down. Other commenters expressed similar concerns about the NRC's assumption that there will be money, equipment, and available expertise to support activities in the long-term and indefinite storage timeframes, especially because the utility will no longer be obtaining income from the plant and may even no longer exist.

A commenter stated that while there may be money, equipment and expertise available to transfer fuel while plants are still operating, the GEIS lacks analysis to demonstrate that fuel can be transferred from wet storage to dry cask storage within the short-term timeframe. The commenter also stated that it is inappropriate to assume that the NRC would continue to exist with adequate funding and noted that NRC funding is derived from fees paid by operating nuclear power plants; thus, the NRC is subject to the economic whims of energy production.

Further, a commenter asserted that the NRC may not function and could be replaced by another agency or that Congressional budget constraints would limit the funds available to fully operate the NRC or its successor to the same extent as now available.

RESPONSE: The NRC disagrees with the comments. A license holder for an ISFSI is required to comply with the requirements of NRC regulations for the duration of the license, including requirements for the monitoring of the ISFSI, training of personnel, and requirements to maintain a decommissioning fund for the facility. The NRC has legal authority to take enforcement action against a licensee if it fails to comply with the regulations. The AEA prohibits transfer of the license without prior NRC authorization and approval of the entity to which the license is being transferred.

The NRC does, by law, recover most of its appropriated funds for operations through fees charged to applicants and licensees. These fees come from all types of applicants and licensees, including power reactors, ISFSIs, and medical facilities (see 10 CFR Parts 170 and 171). These fees are adjusted periodically to ensure the NRC is recovering adequate funds. The NRC will not speculate as to whether Congress will limit the NRC's budget to such an extent that the agency is no longer capable of fulfilling its statutorily mandated regulatory functions or replace the NRC with another agency. Nevertheless, it is reasonable to assume that the Federal government will continue to fulfill its responsibilities to regulate and oversee the storage of spent fuel. See Section D.2.19 of this appendix for additional information regarding institutional controls. Comments regarding the transfer of spent fuel from spent fuel pools to dry cask storage within the short-term timeframe are addressed in Sections D.2.16.10, D.2.16.17, and D.2.18.8. No changes were made to the GEIS or Rule as a result of these comments.

(245-24-6) (783-2-11) (867-2-12) (867-2-13) (867-2-14) (867-2-15) (867-3-8)

D.2.16.19 – COMMENT: A commenter stated that the NRC should have evaluated a scenario in which Yucca Mountain was completed and accepting waste, and stated that it is unclear how the NRC can ignore this alternative. The commenter asserted that the Yucca Mountain alternative would have the least cumulative environmental impacts compared to those analyzed in the GEIS. The commenter stated that a comparison should be made within the impacts assessment that illustrates the difference in cumulative impacts between a Yucca Mountain scenario and those analyzed in the GEIS. The commenter asserted that the comparative analysis should recognize that without Yucca Mountain or some other repository in the near term, multiple transportation campaigns would be required. In addition, the commenter stated that without Yucca Mountain, all spent fuel will have to be repackaged for ultimate repository disposal after it is put into dry cask storage. By including the Yucca Mountain scenario, the commenter stated that a significant portion of the spent fuel would be loaded by the utilities in transportation, aging, and disposal canisters and disposed directly without repackaging.

RESPONSE: The NRC disagrees with the comment. The proposed action is the adoption of a revised Rule, 10 CFR 51.23, that codifies, or adopts into regulation, the NRC's generic analysis of environmental impacts of continued storage of spent fuel. Because the purpose of the proposed action is to preserve the efficiency of the NRC's licensing processes, and the need for the proposed action is to provide processes for use in NRC licensing to address the environmental impacts of continued storage, alternatives to continued storage of spent fuel—such as immediate disposal in Yucca Mountain—are outside the scope of this analysis. Both the short-term and long-term timeframes evaluated in the GEIS include the assumption that a geologic repository is available before the end of those timeframes. Disposal of spent fuel in a geologic repository remains the national policy, and feasibility of siting and the expected date of availability of a repository are discussed in Appendix B of the GEIS. The analysis of the environmental impacts of continued storage during the timeframes considered in the GEIS is not dependent on any specific site of a geologic repository, including Yucca Mountain. Further, a comparison between the environmental impacts of continued storage and disposal is not necessary because the environmental impacts of disposal are outside the scope of this GEIS and Rule. The GEIS evaluated the impacts of continued storage at both at-reactor and away-from-reactor facilities for up to an indefinite timeframe.

Regarding the assertion that multiple transportation campaigns would be needed in the absence of a geologic repository, the NRC evaluated the impacts of transportation of spent fuel to an away-from-reactor storage facility in Section 5.16.1 of the GEIS. The GEIS reasonably assumes that transportation of spent fuel from a reactor site to an away-from-reactor storage facility would occur during the short-term timeframe. The analysis concludes that the magnitude of the increase in dose and risk from this transportation would be low and therefore the radiological impacts would continue to be SMALL. Transportation of spent fuel to a geologic repository, whether directly from a reactor site or from an away-from-reactor storage facility, is outside the scope of the GEIS; however, the impacts of this transportation are considered in the cumulative impacts analysis in Section 6.4.15.2 of the GEIS. Impacts of transportation of spent fuel are addressed further in Sections D.2.33.2, D.2.33.16, and D.2.33.18. The comment's concern regarding repackaging of spent fuel is addressed in Section D.2.17.1 of this appendix. No changes were made to the GEIS or Rule as a result of this comment.

(544-12)

D.2.16.20 – COMMENT: One commenter argued that the GEIS does not appropriately consider the disparity in economic impacts of accidents at plants (e.g., Indian Point Energy Center) and the sites used by the NRC in the documents used to support the GEIS (e.g., Peach Bottom Atomic Power Station and Surry Power Station).

RESPONSE: The NRC disagrees with the comment. The NRC recognizes that the consequences of a severe accident in an area of higher population density would involve higher consequences. However, the probability of such an event remains very low and, because of

this, the risk (which is a product of the probability of an accident and the consequences of that accident) remains low. The NRC concludes that impacts related to the risk from these events are SMALL. No changes were made to the GEIS or Rule as a result of this comment.

(473-13-6)

D.2.16.21 – COMMENT: One commenter stated that the GEIS should include new proposed and reasonably foreseeable storage technologies and their implications on long-term surface storage safety and environmental impacts.

RESPONSE: The NRC disagrees with the comment. The GEIS analysis relies on information regarding existing storage technologies. Any reasonably foreseeable future technologies would have to meet the associated NRC regulations and, therefore, the impacts associated with such technologies would be similar to or less than the impacts of the existing technologies. The NRC rulemaking for the certification of each cask design involves both a safety and an environmental review. However, the NRC concludes that the specific cask design plays essentially no role in the evaluation of the environmental impacts of continued storage. No changes were made to the GEIS or Rule as a result of this comment.

(706-2-23)

D.2.16.22 – COMMENT: One commenter questioned the NRC's assumption that the spent fuel pool would reach capacity after 30 years of licensed life and therefore require fuel to be transferred from the pool to dry cask storage. The commenter stated that the use of higher burnup fuel could affect operational choices such as storage, transfer, and the integrity of the fuel itself.

RESPONSE: The NRC disagrees with the comment. Longer fuel cycles and running fuel to higher burnups means that fuel is transferred to the spent fuel pools at a slower rate. Therefore, the 30-year value stated in the GEIS is conservatively low. Regardless, at some time before the end of a reactor's licensed life the NRC expects that each licensee will have transferred some fuel from the spent fuel pool to dry cask storage. The exact amount of fuel transferred over time does not affect the outcome of the analysis. In general, fuel can generally be transferred into dry cask storage after it has been out of the reactor for more than 5 years. The oldest fuel is typically transferred first, which means fuel has generally been out of the reactor for over 10 years when it is transferred. For issues specific to high-burnup fuel, see Section D.2.38.19 of this appendix. No changes were made to the GEIS or Rule as a result of this comment.

(867-2-17)

D.2.16.23 – COMMENT: A number of commenters expressed various concerns about the NRC's use of current technology and regulations as a basis for the analysis in the GEIS.

Commenters expressed concern that current technological and regulatory levels might not be sustainable over the timeframes analyzed, that this use avoids the use of rigorous and scientific study in the GEIS, that current technology and regulations would not be sufficient to accomplish the activities described in the GEIS, and that current technology has substantial limitations.

RESPONSE: The NRC disagrees with these comments. The GEIS analysis is based on current technology and legal standards under the NRC's organic statute and implementing regulations (see Section 1.8.3 of the GEIS), as with any other EIS prepared by a Federal agency under NEPA. NEPA requires agencies to conduct environmental analyses based on current technology and the available scientific information. It is reasonable to assume that science, engineering, and technology will advance with time and that the increased knowledge available to the NRC and industry can only improve continuing storage safety and mitigate storage environmental impacts. Accordingly, the use of current laws and technology as a baseline in forecasting the environmental impacts of continued storage is reasonable. No changes were made to the GEIS or Rule as a result of these comments.

(303-7) (505-6) (505-7) (553-17) (556-2-3) (919-2-8)

D.2.16.24 – COMMENT: Commenters asserted that the GEIS did not meet expectations for necessary and sufficient information to support impact analyses. Specifically, commenters said the GEIS should have included (1) a summary of the final EIS documents for each nuclear power plant, (2) tables and charts showing the remaining capacity of spent fuel pools, (3) identification of facilities using dry casks, (4) guidelines for best practices that underlie the GEIS analysis assumptions, (5) additional details on the robustness of dry storage casks, and (6) an analysis to demonstrate the availability of land sufficient for dry cask storage of 80 years of irradiated fuel at every reactor site.

RESPONSE: The NRC disagrees with the comments. The information requested by the comments is either included in the GEIS in a form that was readily useable for the analysis or is not within the scope of the GEIS. Although the NRC did not include a summary of the final EIS documents for each nuclear power plant in the GEIS, the NRC presented information in the GEIS necessary to characterize the environment and environmental impacts during reactor operations to establish the baseline affected environment at the beginning of continued storage as the basis for analyzing impacts. This information, presented in Chapter 3 (Affected Environment) of the GEIS was obtained largely from the License Renewal GEIS (NRC 2013m), which in turn summarized information from nuclear plant-specific EISs.

The licensed and operating ISFSIs in the United States are identified in Figure 2-2 of the GEIS. The NRC provided information related to the amount of fuel typically stored in dry casks in Section 2.1.2.2 of the GEIS and the amount of fuel typically stored in spent fuel pools in Section 2.1.2; the information is not presented separately for each ISFSI or spent fuel pool. Section 2.1.1.3 of the GEIS provides the amount of spent fuel anticipated to be generated (based on

fuel type) during 80 years of plant operation. Regarding the availability of land at each reactor site to house 80 years of spent fuel for each reactor onsite, Section 2.1.1.1 provides the range in area for existing nuclear plant sites and Section 2.1.2.2 provides the total acreage required for different types of ISFSIs. Additional information concerning spent fuel storage facilities located at operating and decommissioned reactor sites is provided in Appendix G of the GEIS.

A comment indicated an expectation for information in the GEIS related to best practices and guidelines for safe storage of fuel. As discussed in the introduction to the GEIS, the scope of the GEIS is to analyze the environmental impacts of continued storage and provide a regulatory basis for the revision to the Rule. The NRC provides guidance related to spent fuel storage in regulatory guides, interim staff guidance, and other guidance documents, which can be found on the NRC website, http://www.nrc.gov/waste/spent-fuel-storage/regs-guides-comm.html.

A comment requested additional details regarding the robustness of storage casks. Section B.3.2.2 of the GEIS discusses the robust design of dry cask storage systems. It indicates that "[t]o date, the NRC and licensee experience with ISFSIs and cask certification indicates that spent fuel can be safely and effectively stored using passive dry cask storage technology. There have not been any safety issues with dry cask storage." Further, Section B.3.2.2 of the GEIS discusses the characteristics of the dry cask that contribute to the low risk from accidents and indicates that dry casks have withstood significant challenges such as the earthquake at Mineral, Virginia (2011) and the earthquake and subsequent tsunami in Japan in March 2011. Neither of these events resulted in significant damage or release of radionuclides from dry cask storage containers.

Because the information requested in these comments is either already contained in the GEIS, or in the case of best practices and guidelines for safe storage of fuel, is contained in NRC guidance, as appropriate, no changes were made to the GEIS or Rule as a result of these comments.

(219-1) (245-31-2) (250-27-4) (608-19)

D.2.16.25 – COMMENT: Commenters expressed concerns about the analysis of risks in the GEIS. Several commenters claimed that the NRC used an insufficient or inappropriate risk analysis methodology. Specifically, commenters criticized the use of probability determinations to conclude that high-consequence events may be assigned low environmental risk levels. One commenter cited perceived inadequacies in the treatment of climate change and seismic risks as examples of shortcomings in the risk analysis methodology. One commenter asserted the risk analysis in the GEIS ignored historical nuclear accidents and incidents. Another commenter stated that the results of the risk analysis were inconsistent with public concerns about the risks of indefinite onsite storage of waste. One commenter stated that the GEIS did not provide details to explain how event probabilities were derived.

RESPONSE: The NRC disagrees with the comments. The NRC's analysis of the environmental impacts of severe accidents for at-reactor continued storage of spent fuel is provided in Section 4.18.2 of the GEIS. The assessment appropriately considers risk information, which is an important element in providing an accurate assessment of the environmental impacts of low probability events. This formulation of the assessment of the environmental impact of severe accidents is based on the NRC's policy on reactor severe accidents in NEPA reviews (see 45 FR 40101, "Nuclear Power Plant Accident Considerations Under the National Environmental Policy Act of 1969.") This approach was cited with approval by the Court of Appeals in its 2012 remand (*New York v. NRC*). The assessment of environmental impacts included consideration of external events, such as seismic events, and climate change. The studies relied on to derive event probabilities are summarized and referenced in Section 4.18.2 of the GEIS. Additional information regarding the treatment of low probability events in the environmental review is discussed in Section D.2.35.27 of this appendix. No changes were made to the GEIS or Rule as a result of these comments.

(284-14) (341-2-1) (341-2-2) (341-2-5) (431-12) (431-8) (620-9) (693-4-6)

D.2.16.26 – COMMENT: Several commenters requested that more detailed information supporting the conclusions in the GEIS be provided. One commenter requested that engineering calculations and computer source code be made available. Another commenter requested that additional information supporting impact level determinations be provided. Another commenter suggested that providing additional technical information supporting the GEIS conclusions would ease public concerns about spent fuel storage. One commenter requested that extensive data, assumptions, and calculations regarding climate impacts to a specific river network and the resulting effects on the GEIS assumptions be provided. Two commenters requested that more information, including EISs and EAs supporting prior fuel storage licensing and cask design analyses, be provided in the GEIS. One commenter stated that NRC reviews of spent fuel storage and handling operating experience did not appear to be provided in any official document.

RESPONSE: The NRC disagrees with the comments. NRC and CEQ regulations encourage incorporation of material by reference when the effect will be to cut down on bulk without impeding review of the action. In accordance with the direction provided by the Commission in SRM-COMSECY-12-0016 (NRC 2012a), this GEIS and Rule rely on numerous technical reports and documents on related issues to support the analysis of potential impacts. Each chapter in the GEIS and selected appendices (e.g., Appendix E), provide lists of references identifying the technical reports and environmental review documents supporting the data and analyses summarized in the GEIS. Table 1-1 of the GEIS provides a list of environmental review documents that the NRC relied on, including EISs and EAs supporting prior fuel storage licensing. These references and review documents are available through ADAMS, the NRC public website, public and special technical libraries, or the originating organizations.

The potential effects of climate change are discussed relative to their effects on the accident analyses in Section 4.18, and to their effects on cumulative impacts for relevant resources in Chapter 6. An analysis of the effect of continued storage on climate change is provided in Section 4.5.

The NRC routinely inspects spent fuel pool and dry cask storage operations as part of the agency's inspection program, and considers reports about spent fuel storage handling issues for generic applicability as part of the agency's operating experience and generic issues programs. Copies of NRC inspection reports and generic communications are available in ADAMS and on the NRC public website. No changes were made to the GEIS or Rule as a result of these comments.

(30-14-5) (244-15-6) (262-12) (716-14) (718-3-17) (783-3-4) (823-23) (937-31)

D.2.16.27 – COMMENT: One commenter stated that the NRC has failed to address the environmental impacts of constructing and operating a spent fuel pool island, including economic costs and vulnerability to accidents and malevolent acts.

RESPONSE: The NRC disagrees with this comment. The NRC expects that the structure of the existing spent fuel pool would remain as it is during reactor operation, except that the cooling and other support systems would be isolated from other portions of the plant, allowing the rest of the plant to be decommissioned. The licensee would be unlikely to construct a new spent fuel pool, and no licensee for a decommissioning plant to date has done so. Therefore, the environmental impacts of creating the "spent fuel pool island" would be negligible. Because this activity would occur as part of the decommissioning of the reactor, even those negligible impacts were only considered under cumulative impacts in Chapter 6 of the GEIS. The spent fuel pool would remain subject to applicable security requirements. These requirements are designed to provide adequate protection of public health and safety. Section 4.18 of the GEIS evaluates the impacts of accidents in spent fuel pools and of potential acts of sabotage or terrorism. In addition, Sections D.2.35 and D.2.36 of this appendix address related issues. No changes were made to the GEIS or Rule as a result of this comment.

(867-2-18)

D.2.16.28 – COMMENT: Several commenters suggested that the GEIS did not properly identify the starting point for the continued storage period. These commenters asserted that the timeframe for the analysis of storage impacts should begin when the spent fuel is initially produced, or when it is placed in wet or dry storage. One commenter cited as an example a two-reactor nuclear plant that began storing spent fuel in dry casks in 1993; but the reactors will not cease operating until 2033 and 2034. The commenter argued that applying the timeframes in the GEIS for replacement of casks would result in some casks being over 140 years old before replacement, and stated that this would be inconsistent with the GEIS assumption that

casks would be replaced every 100 years. Another commenter stated that adopting this later starting point excluded from consideration significant environmental impacts that arise in earlier phases of the life of a fuel assembly. One commenter stated that radioactive waste at operating and decommissioning facilities can have similar characteristics. Another commenter asserted that the baseline for evaluating impacts should begin before construction and operation of the reactor facility.

RESPONSE: The NRC disagrees with the comments. The environmental impacts of spent fuel storage during the period of licensed life for reactor operations are addressed in the EIS prepared for the licensing or license renewal of the reactor. The proposed action—the revision to the Rule—specifically addresses the impacts of continued storage. In terms of the baseline considered in the GEIS, the impacts of continued storage are discussed in Chapters 4 and 5. In Chapter 6, the NRC evaluated the cumulative impacts, which adds the impacts considered in Chapters 4 and 5 to the impacts of other past, present, and reasonably foreseeable actions that affect the same resources. This includes any appropriate impacts associated with the reactor that generated the spent fuel.

As the comment indicated, it is possible that the first casks that are loaded at a plant could be over 100 years old before the end of the short-term timeframe. Using the example cited in the comment, if a cask was loaded in 1991, and the reactor license expired in 2034, the GEIS would use the year 2094 as the end of the 60 year short-term timeframe. At that point the oldest cask would be 103 years old. This issue is addressed in the first bullet of Section 1.8.3 of the GEIS, where the NRC stated, “For an ISFSI that reaches 100 years of age near the end of the short-term storage timeframe, the NRC assumes that the replacement would occur during the long-term storage timeframe.” In other words, because the 100-year timeframe for replacement is an assumption, and not a regulatory requirement, the NRC assumed that replacement could be delayed a few years until after the short-term timeframe. No changes were made to the GEIS or Rule as a result of these comments.

(783-2-1) (783-1-6) (916-1-16) (919-4-17) (937-32)

D.2.16.29 – COMMENT: The NRC received several comments either expressing disagreement with or asking for clarification of the summary of environmental impacts presented in Chapter 8 of the GEIS. Specifically, some commenters disagreed with the NRC’s determination that there would be no irreversible and irretrievable commitments of resources during continued storage for most resources. One commenter stated that the resources affected are significant and that the use of resources during continued storage precludes their use for renewable energy development. One commenter stated that indefinite storage of spent fuel should be analyzed as an irreversible and irretrievable commitment of resources. One commenter asked whether an irreversible and irretrievable commitment of a resource meant an acceptance of permanently sacrificed land.

RESPONSE: The NRC agrees in part and disagrees in part with the comments. The NRC agrees that the GEIS identifies specific resource areas for which there would be irreversible and irretrievable resource commitments resulting from continued storage. The NRC notes, however, that the proposed action in this case is a rulemaking to update the Rule; and that there are no irreversible or irretrievable commitments of resources associated with this proposed action. However, to provide a complete picture of the environmental impacts of continued storage, the NRC is providing an analysis of the irreversible commitment of resources associated with continued storage. The NRC revised Section 8.3 of the GEIS to clarify that the proposed action is a rulemaking and to note why the NRC is providing a more detailed discussion of the irreversible and irretrievable commitments of impacts associated with continued storage. Regarding the impact of resource commitments on renewable energy development, the resources that would be committed to continued storage represent a very small fraction of those resources available to support residential, commercial, and industrial development, including renewable energy projects.

As noted in Section 8.4 of the GEIS, NEPA requires that an EIS include information about the relationship between short-term uses of the environment and maintenance and enhancement of long-term productivity. The purpose of this analysis is to assess and disclose whether any unavoidable adverse impacts (as summarized in Section 8.2) and irreversible and irretrievable commitments of resources from continued storage (as identified in Section 8.3) would persist as impacts beyond the period of continued storage and therefore affect “the maintenance and enhancement of long-term productivity” as described in NEPA. The terms “short-term uses” and “long-term productivity” are different than the GEIS timeframes of short-term, long-term, and indefinite. Section 8.4 describes how the GEIS impact analysis conclusions for the three timeframes fit within the short-term use and long-term productivity analysis framework required by NEPA.

Section 8.3 of the GEIS has been revised to clarify the discussion of irreversible and irretrievable resource commitments. No changes were made to the Rule as a result of these comments.

(93-8) (328-11-2) (820-6) (910-12)

D.2.16.30 – COMMENT: Several commenters expressed general support for the assumptions made in the GEIS regarding transfer of spent fuel from spent fuel pools to dry casks within 60 years of reactor operation and about the activities associated with the storage of fuel in casks during the long-term and indefinite timeframes. The commenters stated that some assumptions are conservative (e.g., requiring fuel to be transferred to new casks every 100 years and rebuilding the entire ISFSI every 100 years). One commenter stated that the NRC should be clear that because these assumptions are so conservative they should be characterized as bounding, and that all the assumptions listed in Section 1.8.3 should state the conservative or bounding nature of the assumption. Two commenters stated that the assumption of a 100-year

replacement interval is conservative. Another commenter stated that cask systems would continue to be licensed well beyond 100 years.

RESPONSE: The NRC agrees in part and disagrees in part with the comments. The NRC agrees that the assumptions provide reasonable predictions to support the NRC's analysis of the environmental impacts associated with the continued storage of spent fuel. The assumptions used in the analysis are sufficiently conservative to bound the impacts such that variances that may occur from site to site are unlikely to result in environmental impact determinations that are greater than those presented in the GEIS. In complying with the requirements of the NEPA, the NRC based its environmental impact analysis on reasonable assumptions so that the impacts, as evaluated in the GEIS, are neither worst case, nor underestimated. For further information regarding the assumption about repackaging of fuel, see Section D.2.16.8 of this appendix. No changes were made to the GEIS or Rule as a result of these comments.

(30-7-6) (30-6-9) (112-25-4) (163-11-2) (244-11-8) (245-20-3) (329-10-4) (694-3-12) (694-2-13) (694-3-19) (694-2-25) (697-2-21) (697-1-30) (697-2-6) (827-1-17) (827-1-18) (827-1-19) (827-2-2) (827-7-2)

D.2.16.31 – COMMENT: A commenter stated that the timing and movement of spent fuel to an away-from-reactor ISFSI cannot be assessed generically because it is site-specific.

RESPONSE: The NRC disagrees with this comment. In the GEIS, the NRC evaluated, on a generic basis, the impacts of transporting spent fuel from reactor sites to an away-from-reactor ISFSI, and the NRC continues to consider such an analysis reasonable under NEPA. This is because the impacts associated with transportation of spent fuel (e.g., doses to workers and public, and traffic impacts) are well understood and have been addressed in a number of reports and in 10 CFR Part 51, Table S-4. The comment did not provide any specific objection to such analyses. The timing of such shipments does not affect the analyses, and thus is not included as a factor in the GEIS. No changes were made to the GEIS or Rule as a result of this comment.

(867-2-16)

D.2.16.32 – COMMENT: Several commenters stated that the GEIS failed to demonstrate that the generic analysis in the GEIS is bounding, and that a GEIS is not as protective as a site-specific analysis. One commenter stated that the flawed structuring of alternatives avoided developing solutions to the hazards and consequences associated with continued storage. In addition, the commenter asserted that the generic approach only facilitates licensing and avoids site-specific analysis, thus subverting the purpose and utility of NEPA. The commenter argued that each site is unique and the GEIS does not provide an accurate assessment of the site-specific environments and impacts.

Another commenter asserted that the NRC failed to sufficiently demonstrate that a generic assessment "provides for the same level of environmental protection as the other alternatives." The commenter stated that benefits gained from a generic analysis accrue predominantly to private and corporate stakeholders and cited the cost analysis provided in Chapter 7 of the GEIS which stated that it could cost approximately $24 million to address continued storage impacts in site-specific proceedings. The commenter stated that this cost, though not small, is minor compared to the cost of constructing a new nuclear power plant.

Another commenter stated that the generic approach of the proposed Rule and draft GEIS were fundamentally misguided because the practical, technical, and logistical challenge of responsibly managing spent fuel distributed across the United States necessitates a structured and regulatory approach that is site-specific. The commenter asserted that the NRC has not demonstrated that the technical process of continued storage is generic rather than site-specific. Another commenter asserted that there was an insufficient basis to assume that an at-reactor ISFSI or DTS could be built at every site.

One commenter asserted that a generic analysis is insufficient to provide the "hard look" required by NEPA. This commenter argued that the site-specific affected environments vary too much to be adequately described generically. The commenter called the description of the affected environment in the GEIS cursory, and asserted that it was inadequate for an action as large in magnitude as storage over the long-term and indefinite timeframes. The commenter asserted that there could be a meaningful examination of environmental impacts at a site-specific level or at least a regional level where the NRC can evaluate a diverse range of alternatives in terms of the amount of spent nuclear, storage configurations, spent fuel classes, cask options and institutional control scenarios. The commenter stated that the cursory descriptions of resource areas in Chapter 3 of the GEIS illustrate the need for a tiered process on a site-specific or at least regional level to adequately inform decisionmakers.

One commenter stated that the GEIS contains a deficiently generic analysis of the impacts associated with continued storage during the long-term and indefinite timeframes to support a Rule that would preclude site-specific NEPA analyses in future licensing actions. Further, the commenter asserted that the GEIS failed to identify and assess critical site-specific concerns related to the impacts of onsite continued storage, and as a result does not take the "hard look" required by NEPA. The commenter stated that the GEIS is fundamentally flawed, and that the NRC should require site-specific review of the impacts of future spent fuel pool leaks, and the risk and consequences of pool fires in all licensing proceedings.

RESPONSE: The NRC disagrees with the view stated in the comments that the differences between sites render a generic analysis inappropriate.

The NRC has determined in the GEIS that the direct and indirect environmental impacts of continued storage can be analyzed generically. This means that, for each of the resource areas

analyzed in the GEIS, the NRC has reached a generic determination (SMALL, MODERATE, or LARGE, or a range) that is appropriate for all sites. The assumptions used in the analysis are sufficiently conservative to bound the impacts such that variances that may occur from site to site are unlikely to result in environmental impact determinations that are greater than those presented in the GEIS. In addition, in remanding the 2010 Waste Confidence Rule (75 FR 81032) to the NRC for additional analysis, the Court of Appeals continued the long history of Federal courts approving a generic approach to the analysis of common environmental impacts. In *New York v. NRC*, the Court of Appeals stated that the NRC could assess the impacts of continued storage generically, indicating that there is "…no reason that a comprehensive general analysis would be insufficient to examine onsite risks that are essentially common to all plants... given the Commission's use of conservative bounding assumptions and the opportunity for concerned parties to raise site-specific differences at the time of a specific site's licensing."

It is important to note that this GEIS satisfies a small portion of the NRC's NEPA obligations related to the issuance of a reactor or spent fuel storage facility license by generically evaluating the environmental impacts of continued storage. Prior to the completion of an individual licensing action, the NRC will conduct a site-specific environmental review and document the results of this review in an EA and FONSI or EIS. The site-specific environmental review will address, among other things, the environmental impacts of spent fuel storage during the license term. In these site-specific licensing reviews, NRC will also consider site-specific mitigation measures. Taken together, the GEIS, which assesses spent fuel storage impacts during continued storage, and the site-specific environmental review, which assesses spent fuel storage impacts during the period of licensed operations, will provide the Commission with a complete environmental analysis of the impacts associated with spent fuel storage prior to disposal in a geologic repository. These environmental analyses will also provide the Commission with the information necessary to properly consider protection of the environment in its licensing decisions, as intended by NEPA.

The suggestion of a "regional" analysis would not address the perceived shortcomings of the generic analysis because this type of analysis would still not be site-specific. However, as discussed above, the environmental impacts of each facility will be addressed by a site-specific environmental analysis for the licensed period and the GEIS for the continued storage period.

Having concluded that the impacts of continued storage can be addressed generically, and that the combination of the GEIS and site-specific reviews will meet the requirements of NEPA, the use of the GEIS alternative, with its lower cost compared to other alternatives, is appropriate. Each of the alternatives considered by the NRC in Chapter 7 of the GEIS would satisfy the NEPA requirement for a hard look at the environmental impacts of the action. Therefore, any of the alternatives could be chosen. The use of a GEIS and Rule enables the NRC to satisfy its NEPA obligations with respect to continued storage in the most efficient manner while still taking the requisite hard look at environmental impacts. While applicants (and their ratepayers) will

benefit from the lower cost of the alternative chosen, the key point is that the alternative first had to enable the NRC to meet the requirements of NEPA.

The NRC does not believe that it must perform a site-by-site review and prove that every reactor site could host an ISFSI and a DTS as part of the GEIS. Every licensee that has chosen to build an onsite ISFSI to date (61 sites) has been able to locate the ISFSI suitably. Onsite space exists for an ISFSI given that every reactor site must include an exclusion area (see 10 CFR 100.3, 100.11(a)(1), and 100.21(a)). The NRC reasonably expects that future licensees will also be able to provide space for an ISFSI and a DTS on their sites.

The GEIS evaluates the environmental impacts of continued storage. Safe management of spent fuel is achieved by the licensee's compliance with NRC requirements in 10 CFR Parts 50, 52, and 72 for the construction and operation of spent fuel pools and ISFSIs. The NRC periodically updates to those rules, (e.g., the improvements to safety in response to the September 11, 2001 terrorist attacks and the Fukushima accident, and ongoing NRC inspection and enforcement activities).

For additional information regarding the use of generic analyses, see Section D.2.11.1 of this appendix. For additional information on the matter of institutional controls, see Section D.2.19.1 of this appendix. No changes were made to the GEIS or Rule as a result of these comments.

(447-2-1) (473-12-20) (603-10) (603-9) (706-4-2) (710-1) (897-4-24)

D.2.16.33 – COMMENT: Commenters expressed concerns about the use of the Private Fuel Storage, LLC (PFS) FEIS (NRC 2001a) as an example of an away-from-reactor storage facility in the GEIS. Commenters opposed its use as a model for away-from-reactor storage. One commenter asserted that it was wholly inappropriate to incorporate the site-specific details of the PFS FEIS into a GEIS and suggested an earlier version of the Waste Confidence Rule had prevented the consideration of any environmental impacts for continued storage beyond the storage licensing period in the PFS FEIS. They asserted that without an adequate explanation for the basis of incorporating portions of the PFS FEIS findings into the final GEIS, it was circular logic to rely on an analysis that did not consider the impacts of continued storage when the stated purpose of the GEIS was to "address the environmental impacts of continuing to store spent fuel…at an away-from-reactor storage facility, after the end of a reactor's licensed life for operation until final disposition in a geologic repository ('continued storage')."

RESPONSE: The NRC disagrees with these comments. As discussed in Section 5.0 of the GEIS, the PFSF was used primarily to establish a reasonable set of parameters for a possible away-from-reactor ISFSI. So, for example, the NRC used the physical size of the PFSF, its facilities, and its workforces (construction and operation) as parameters in the analyses. But the NRC also assumed construction and operation of a DTS, and eventual replacement of facilities and storage pads to address storage over periods longer than that addressed for the PFSF.

The NRC also did not make any specific assumption regarding the location of the away-from-reactor ISFSI, and more specifically, did not assume it was at the location proposed for the PFSF, and did not assume the environmental impacts of an away-from-reactor ISFSI would be the same as those for the PFSF. The NRC concludes that the GEIS provides an adequate explanation of how information regarding the PFSF was used in the analysis. The analysis in the GEIS for an away-from-reactor ISFSI also does not stop at the end of the initial licensed period, but continues through the three timeframes discussed in the GEIS. No changes were made to the GEIS or Rule as a result of these comments.

(410-20) (579-5) (648-8) (919-4-6)

D.2.16.34 – COMMENT: One commenter stated that the NRC should discuss when at-reactor storage would not be appropriate and away-from-reactor storage would be preferable.

RESPONSE: The NRC disagrees with the comment. The GEIS and Rule satisfy the NRC's NEPA responsibilities by analyzing the environmental impacts of continued storage in at-reactor or away-from-reactor storage sites. The SOC in the Rule and Appendix B of the GEIS support the conclusion that it is technically feasible to safely store spent fuel at either at-reactor or away-from-reactor sites. It is up to licensees to determine whether they will use at-reactor or away-from-reactor storage facilities until DOE takes possession of the fuel. Therefore, a discussion of whether and when at-reactor or away-from-reactor storage would be appropriate or preferable is not necessary to the analysis of the environmental impacts of continued storage. No changes were made to the GEIS or Rule as a result of this comment.

(622-1-13)

D.2.16.35 – COMMENT: Two commenters noted that the NRC is required to provide an analysis of the public health, safety, and environmental impacts of continued storage before allowing continued storage activities to occur.

RESPONSE: The NRC agrees with the comment. Before any license or license renewal can be issued, the NRC must determine that the license application complies with the NRC's regulations for protection of the public health and safety. As part of this review, the NRC will also conduct an appropriate NEPA review that will consider the environmental impacts of the proposed action. However, the analysis in this GEIS does not authorize any licensed activities; rather, this GEIS satisfies a portion of the NRC's NEPA obligations related to the evaluation of a reactor or spent fuel storage facility license application by generically evaluating the environmental impacts of continued storage. The NRC further notes that the storage of spent fuel by existing licensees must meet the NRC's safety requirements and remains subject to ongoing NRC inspection and enforcement.

For more information on the NRC's role in licensing a repository see Sections D.2.37.10 and D.2.37.5 of this appendix. No changes were made to the GEIS or Rule as a result of these comments.

(245-14-3) (325-11-2)

D.2.17 Comments Concerning GEIS Assumptions – Dry Transfer System

D.2.17.1 – COMMENT: Several commenters questioned the reliance in the GEIS on a DTS and long-term dry cask storage because no DTS has ever been licensed and the technology is uncertain. The commenters asserted that the assumption of a DTS violates the stated reliance on existing technology and regulations. Many commenters asserted that the GEIS provided insufficient detail about the DTS and how it would operate, and others asserted that DTSs are too uncertain to be relied upon in the long-term and indefinite timeframes. One commenter indicated that the conceptual design of a DTS cited in the GEIS was not a realistic or adequate basis for developing a reference design or for evaluating impacts. One commenter requested the NRC clarify what is meant by the phrase "DTS or equivalent" in the DTS assumption. Another commenter concluded that although a solution to spent fuel pool storage will be needed in the 60-year timeframe, none is contemplated in the GEIS. Commenters also questioned the NRC's impact analyses involving references to the Transnuclear-EPRI DTS described by DOE (DOE 1996), and the NRC EIS for the proposed Idaho Spent Fuel Facility (NRC 2004c) asserting that these documents likely do not reflect advancements in science, engineering, and operational experience and that these DTSs were conceptually less complex than the DTS described in the GEIS. Several commenters requested that the NRC provide more detailed information about the DTS, including (1) whether the DTS would be inside a containment building, (2) what skill level of workers would be required to operate the DTS, (3) the minimum level of institutional controls needed at each DTS and ISFSI, (4) the consequences of DTS failure, (5) the environmental impacts of DTS construction and operation, and (6) the costs of constructing and operating a DTS.

Commenters also raised questions about the inspection and monitoring of dry casks. Commenters requested that the NRC provide additional information about (1) the circumstances that would affect the feasibility of repackaging in the DTS, including fuel, cladding, and storage system degradation; (2) how likely these issues are to arise; (3) how inspections and remediation would be implemented; (4) whether fuel inspections during repackaging would be performed in air, underwater, or in an inert atmosphere; (5) potential damage to fuel from inspections; and (6) the potential radiological, environmental, and public health consequences of these operations.

In light of the technological uncertainty, commenters requested that the NRC assess the impacts of not having a DTS in the long-term and indefinite timeframes including evaluation of storage options. One commenter requested an explanation of what would be done to address

damaged casks and fuel in the time before a DTS could be constructed. Further, some commenters asserted that because the DTS is unlikely, the NRC cannot rely on the assumption that all spent fuel would be transferred to dry casks by the end of the short-term timeframe. Other options suggested by commenters include wet transfer in new or existing fuel pools and overpacking.

Some commenters requested additional clarification on the regulatory status of the DTS. One commenter requested that the GEIS state that a DTS is necessary based on GEIS assumptions and to allow transfer of spent fuel stored in casks that are not approved for transportation. Several commenters asserted that the GEIS could not rely on the DTS unless NRC regulations would require one to be built. Other commenters asked the NRC to explain what current regulations address the DTS.

One commenter requested additional detailed discussion of the reference facilities, including (1) an explanation of the reasons why these facilities have not yet been constructed; (2) a discussion of how that may affect any assumptions; (3) a discussion of the technical and regulatory challenges that have hindered the development of such systems; (4) whether these facilities were licensed to retrieve, inspect, and repackage fuel, including high-burnup fuel, after prolonged storage; (5) and the potential for these challenges to be encountered in future efforts.

RESPONSE: The NRC agrees in part and disagrees in part with the comments. The NRC considers the assumption regarding the future use of DTS to be reasonable, as discussed in Section D.2.17.3 of this appendix. Because NEPA analyses are, by their nature, forward-looking, it would be impossible to perform such analyses without making a set of reasonable assumptions. For that reason, the NRC has historically prepared its environmental review documents by formulating assumptions of future conditions, where necessary, based on available information and the agency's technical and scientific expertise. The courts have approved this methodology as NEPA-compliant. See *Baltimore Gas & Elec. Co. v. NRDC*. In this case, the NRC used available information regarding future facilities for handling spent fuel, drawing from previous reviews performed by both DOE and NRC.

The NRC agrees with the comment that there could be other options available in the future to meet the same objectives as having a DTS at each spent fuel storage installation. Because such facilities would be needed several decades into the future and would be the subject of separate future NRC licensing actions, a comparison of spent fuel transfer technology options in the GEIS now would not inform the decision to license or renew the license of a power plant at-reactor ISFSI or away-from-reactor ISFSI because the NRC believes that the DTS option reasonably bounds the other options that may be available.

Regarding inspections of dry cask storage systems, as described in Section B.3.3.3 of the GEIS, after the end of the reactor's licensed life for operation, the licensee would continue to store spent fuel onsite under either a general or specific 10 CFR Part 72 license. During this

time, the licensee would remain under the NRC's regulatory control and NRC inspections and oversight of storage facilities would continue. The NRC monitors the performance of ISFSIs (at both decommissioned and shutdown reactor sites and operating reactor sites) by conducting periodic inspections.

The opportunity to inspect spent fuel that has been placed into dry cask storage would occur during repackaging of the fuel. During the short-term timeframe, repackaging would occur, if needed, in the spent fuel pool. In the long-term and indefinite timeframes, repackaging would occur in the DTS. In addition, as described in Section 2.2.1.3 of the GEIS, in accordance with 10 CFR 72.42, ISFSI license renewal applications must include, among other things, (1) time-limited aging analyses that demonstrate that structures, systems, and components important to safety will continue to perform their intended safety function for the requested period of extended operation and (2) a description of the aging management program for management of issues associated with aging that could adversely affect structures, systems, and components important to safety. Similar aging analysis and management requirements apply to general ISFSI licensees as part of storage cask certificate of compliance (CoC) renewals, for more information see Section D.2.38.3 of this appendix. These requirements enhance confidence that spent fuel, including bare fuel, fuel in canisters, or damaged fuel that has been canned and stored in dry casks could be retrieved for repackaging, if needed. Finally, historical evidence shows that licensees have dealt with damaged fuel in the past. In the most extreme example, the damaged fuel from the core of Three Mile Island, Unit 2, was removed and put into storage. If this type of fuel can be successfully moved and managed, then it is reasonable to assume that damaged spent fuel in casks can be handled if necessary.

For additional information regarding the cost of spent fuel storage, see Section D.2.42.2 of this appendix. Additional descriptions of spent fuel degradation and damaged fuel handling were added to Appendix B in response to this and other comments. No changes were made to the Rule as a result of these comments.

(163-34-9) (459-5) (473-12-10) (473-12-16) (473-12-17) (473-12-18) (473-1-20) (473-12-21) (553-15) (556-2-8) (619-1-16) (619-1-17) (637-7) (669-11) (706-3-23) (783-2-17) (783-2-9) (836-16) (836-41) (836-42) (836-43) (836-45) (836-66) (867-2-10) (867-3-12) (867-2-7) (898-2-16) (913-10) (913-5) (913-8) (915-1) (915-13) (915-15) (915-5) (915-6) (915-8) (919-3-1) (919-4-10) (919-4-9) (929-2) (930-2-15) (930-2-16) (930-2-17) (930-3-18) (930-2-19) (930-1-9)

D.2.17.2 – COMMENT: One commenter stated that experience suggests that the installation of a DTS at every ISFSI location is not likely to be necessary, and that should repackaging become necessary, it is more likely that industry would consider portable systems or overpacks. This commenter also stated that it is likely that advances in technology over the centuries would provide for improved repackaging methods with smaller environmental impacts.

RESPONSE: The NRC agrees with the comment that there might be other options available in the future to meet the same objectives as having a DTS at each spent fuel storage installation. The GEIS assumed a DTS at each storage site as a conservative assumption for the purpose of evaluating potential environmental impacts of continued storage. As with all NEPA analyses, the assumptions in the GEIS in no way approve actions or constitute requirements. No changes were made to the GEIS or Rule as a result of this comment.

(827-2-1)

D.2.17.3 – COMMENT: Several commenters stated that there will be unspecified difficulties, costs, spills, and accidents stemming from transfers of spent fuel from spent fuel pools to dry casks, and from dry casks to other dry casks. One commenter stated that there may not be room on the existing sites to construct the necessary DTSs and ISFSIs. In addition, one commenter asserted that no generic environmental impacts assessment can be made because of site-specific variations in the condition of spent fuel pools, canisters, and casks; the existence of multiple types of dry storage systems; and the unverified performance of the reference DTS. Another commenter asserted that the GEIS discussion of effluent radiation monitoring is an admission that there will be radiological releases from the DTSs over time. One commenter expressed general skepticism about the reliability of the NRC's DTS and dry cask assumptions because the NRC's assessments of the technical capabilities of dry casks "keep expanding and improving as time progresses and the prospect of an available repository diminishes."

RESPONSE: The NRC disagrees with the comments. Because continued storage activities involving a DTS are assumed to occur in the long-term timeframe after the operating license of a power reactor expires, the DTS activities evaluated in the GEIS would occur many decades into the future (i.e., beyond 60 years past the term of the operating license). Therefore, some uncertainty exists regarding the specific methods and equipment that would be used. For the purpose of evaluating environmental impacts in the GEIS, the NRC conservatively assumed DTSs would be employed based on existing technology and regulations. This assumption is conservative because constructing, operating, and replacing DTS facilities would have greater environmental impacts than other plausible future options for addressing at-reactor transfer needs (e.g., use of overpacks that would not require bare fuel handling). In addition, industry has decades of operating experience with wet transfer of new fuel and spent fuel, which involves some spent fuel handling equipment and procedures similar to what would be used in a DTS. Based on these factors, the NRC considers the assumption regarding the future use of DTSs to be reasonable. Additional details about the design, operation, and safety of the DTS concept are provided in the supporting references in Sections 2.1.4 and 2.2.2.1 of the GEIS.

While spent fuel transfer operations can present challenges to operators (e.g., working with damaged fuel [see Section D.2.17.4 of this appendix for more information]), as described in Section 4.17.2 of the GEIS operation of a DTS would be similar to the operations conducted at current reactor sites with licensed ISFSIs where spent fuel is loaded in dry storage cask

systems. These operations routinely maintain public and occupational doses well within existing requirements. This is done despite variations in the facilities and equipment and the characteristics of the spent fuel being transferred. While these characteristics may vary, the safety regulations do not; therefore, the variation in equipment and fuel characteristics do not present insurmountable challenges or preclude a generic approach to analysis of impacts. In addition, the NRC requires that facilities and equipment are maintained to ensure safety functions and are not compromised. Further, the NRC inspects operating facilities to verify compliance with requirements.

The impacts from accidents, including those involving transfer operations, are evaluated in Sections 4.18, 5.18, and 6.4.17 of the GEIS. Although the consequences of an accident could be high, the impacts were found to be SMALL based on the low likelihood and, therefore, low risk (see Section D.2.35.27 of this appendix for more information). As described in Section 2.1.4 of the GEIS, a DTS would be licensed by NRC under the regulations in 10 CFR Part 72. Therefore, future licensing of site-specific DTSs would undergo thorough NRC safety and environmental reviews that would consider potential accidents and evaluate in detail how each proposed facility operator would maintain safety in transfer operations involving the specific fuel pool, transfer equipment, and type of dry storage system (including canisters and casks) for that facility.

Radiation monitoring is conducted at all NRC-licensed facilities to comply with the radiation protection program requirements in 10 CFR Part 20. Radiation monitoring verifies that licensees are maintaining control of radioactive materials and not exceeding worker and public dose limits. Any planned radioactive effluents from a DTS would be documented in detail during a site-specific licensing of a transfer facility. An applicant for an NRC license would need to demonstrate how applicable standards for worker and public safety would be met by proposed operations (see Section D.2.34.11 of this appendix for more information).

Regarding the availability of land area to accommodate the construction of a DTS or an ISFSI, as described in Section 3.1 of the GEIS, most U.S. power plants are sited on large tracts of land that have available areas where a DTS or ISFSI could be located. Table 3-1 of the GEIS provides a comparison of the small amount of land required for an ISFSI with the total site area at various power plant sites. If a power plant site with limited available land area did not have sufficient land area to construct a DTS or ISFSI then the licensee would have to pursue other options (e.g., arranging for storage at an away-from-reactor storage facility). The impacts of continued storage at an away-from-reactor storage facility were evaluated in Chapter 5 of the GEIS. No changes were made to the GEIS or Rule as a result of these comments.

(163-34-5) (328-7-4) (459-4) (553-14) (619-1-23) (805-14) (919-4-12)

D.2.17.4 – COMMENT: Several commenters stated that NRC has not described how damaged spent fuel transfer operations can be carried out. The commenters believe significant

uncertainty exists about the technology to transfer even undamaged fuel and asserted that at least some spent fuel and casks have already degraded, or will inevitably degrade, as they age or otherwise be damaged such that transfer operations cannot be carried out safely or smoothly. One commenter cited a Bechtel SAIC study (Bechtel 2005) and testimony to the Blue Ribbon Commission on America's Nuclear Future (BRC 2012) for estimates that 10 percent of the fuel arriving at a future repository will be damaged. These commenters criticized the draft GEIS for failing to adequately address the potential consequences and costs of damaged fuel affecting DTS operations. Another commenter asserted that the radiological risks of packaging spent fuel will vary by fuel type and volume and, therefore, that a generic assessment might not be appropriate in light of that variability.

One commenter cited a 1993 Palisades Nuclear Plant situation as reason to doubt that the technology to address damaged fuel or casks exists. As the commenter described it, Consumers Energy, the plant's operator, discovered weld flaws in a fuel cask and initially planned to unload the irradiated fuel in the cask, having only a 50-hour window of time in which to accomplish the task; however, insurmountable technical difficulties prevented the operator from unloading that cask. The commenter suggested that this damaged cask and dozens more of the same type (VSC-24) remain in use. Other commenters asserted that the likelihood of damage is even greater for high-burnup fuel.

RESPONSE: The NRC agrees with the comments that suggested the GEIS did not describe damaged spent fuel transfer operations and costs. The NRC also acknowledges the uncertainty associated with the technology that could be used, as well as challenges presented by transfer of damaged fuel. However, the NRC disagrees with the comments that damaged fuel cannot be transferred safely, that the GEIS did not evaluate the consequences of damaged spent fuel transfer, and that variability in spent fuel characteristics precludes a generic analysis of environmental impacts from transfer operations. Although technically the costs of such operations are outside the scope of the GEIS, the NRC has added information throughout Chapter 2 regarding the costs related to the DTS and other activities associated with continued storage. For additional information related to the cost of continued storage, see Sections D.2.42.1 and D.2.42.2 of this appendix.

The reference DTS was described in Section 2.1.4 of the GEIS and its construction and operation in Section 2.2.2.1 of the GEIS. These sections did not describe damaged fuel. Because the topic of damaged fuel is relevant to the description of DTS operations in Section 2.2.2.1 of the GEIS, in response to the comments, the NRC has added information within Section 2.2.2.1 of the GEIS describing damaged fuel in the context of DTS operations, including descriptions of methods for handling damaged spent fuel. In addition, Section 4.18.1.2 of the GEIS addresses the environmental impacts of handling damaged fuel in the DTS.

In addition, the NRC acknowledges in Section 2.1.4 of the GEIS that there are no DTSs at U.S. nuclear power plants. Although exact design specifications for dry transfer facilities are not yet

established, the NRC's previous review of the Transnuclear-EPRI DTS design found the concept had merit. Given this review combined with decades of industry operating experience with wet transfer of new fuel and spent fuel, the NRC has reasonably concluded that DTSs are technically feasible.

While the possibility of damaged fuel presents challenges for transferring fuel, various methods for safely handling damaged fuel have been reviewed in the literature. See for example International Atomic Energy Agency (IAEA), Management of Damaged Spent Nuclear Fuel, IAEA Nuclear Energy Series No. NF-T-3.6 (IAEA 2009), and IAEA, Management of Severely Damaged Nuclear Fuel and Related Waste, Technical Report Series No. 321 (IAEA 1991). The NRC requires spent fuel that has been classified as damaged for storage be protected during storage (e.g., placed in a can designed for damaged fuel, referred to as a damaged fuel can or damaged fuel container) (see 10 CFR 72.122(h)(1) and Interim Staff Guidance SFST-ISG-1 (NRC 2007b). A damaged fuel can is designed to ensure that the fuel-specific or system-related functions continue to be met (i.e., when a spent fuel assembly is placed in a damaged fuel can, one or more of the necessary safety functions, depending on the type of can, is performed by the can instead of the spent fuel assembly) (IAEA 2009). A damaged fuel can will confine fuel particles, debris, and damaged spent fuel to a known volume in a cask; ensure compliance with criticality safety, shielding, thermal, and structural requirements; and permit normal handling and retrieval of spent fuel from a cask. Therefore, damaged fuel that was placed in a damaged fuel can prior to dry storage or transportation to a repository for disposal would be transferred to a storage or disposal cask in the same manner as undamaged fuel with comparable consequences. Descriptions of mechanisms for spent fuel degradation during continued storage including those associated with high-burnup fuel are provided in Appendix B of the GEIS. Finally, the fuel transfer case study example raised by one commenter involving the need for corrective actions at a facility to address flaws in cask closure welds was resolved through the implementation of changes to closure welding practices and inspection procedures. Its occurrence does not cast doubt on the conclusions of the GEIS regarding the technical feasibility of DTS operations.

The long history of spent fuel handling provides a basis to conclude that spent fuel variability by age and volume do not preclude a generic analysis of fuel transfer impacts. The public and occupational health impacts of operating a DTS are evaluated in Section 4.17.2 of the GEIS. The operation of a DTS would be similar to the operations conducted at current reactor sites with ISFSIs. At those sites, spent fuel is loaded into dry storage cask systems that maintain public and occupational doses within existing NRC requirements. This is routinely accomplished despite the variety of spent fuel characteristics encountered. While the fuel characteristics may vary, the safety regulations governing public and occupational exposures do not vary.

In response to comments about damaged fuel, NRC has added information within Section 2.2.2.1 of the GEIS describing damaged fuel in the context of DTS operations, including descriptions of methods for handling damaged spent fuel. No other changes were made to GEIS and no changes were made to the Rule as a result of these comments.

(2-4) (163-22-7) (230-5) (336-8) (377-5-18) (431-10) (608-18) (819-14) (867-3-13) (867-2-20) (898-2-19) (919-4-11)

D.2.18 Comments Concerning GEIS Assumptions – Timeframes

D.2.18.1 – COMMENT: Many commenters provided comments on the likelihood of the indefinite timeframe and the NRC's statement that the short-term timeframe is the most likely timeframe. Commenters questioned the NRC's statements in the draft GEIS that the indefinite timeframe was highly unlikely and stated that it was unreasonable to assume a repository would be available within the short-term timeframe.

In contrast, other commenters expressed support for repository availability in the short-term timeframe. One commenter stated a no-repository scenario is contrary to current law and is remote and speculative and represents a worst case, which is not required by NEPA.

RESPONSE: Geologic disposal remains the national strategy for the disposition of spent fuel under the NWPA and the Federal government, through the DOE, is continuing its work on a disposal solution for spent fuel. Based on these factors and the technical feasibility of a geologic repository (discussed in Appendix B of this GEIS), the NRC has concluded that siting, constructing, and licensing of a repository within the short-term timeframe is the most likely outcome. Consequently, the NRC believes that the indefinite timeframe is the least likely of the three timeframes. However, sufficient uncertainty remains in the timing of the effort to open a repository that the NRC cannot completely rule out the possibility that a repository will not be available by the end of the short-term timeframe. Therefore, the NRC has prepared an analysis of an additional 100 years of continued storage (i.e., the long-term timeframe) and, in accordance with the direction of the Court of Appeals, has assumed that a repository never becomes available (i.e., the indefinite timeframe).

In addition, a number of comments were submitted that expressed concern regarding both the costs and responsibilities of continued storage (see Section D.2.42 in this appendix). DOE has estimated that future liabilities, should the U.S. Government not take custody of spent fuel, will total about $20.7 billion through 2020 and may cost about $500 million each year after that (GAO-12-797, GAO 2012). Furthermore, the NRC acknowledges that, because of delays in the siting and licensing of a repository, the Federal government bears an increasing financial responsibility for spent fuel storage costs, and it may become responsible for paying all the costs associated with spent fuel storage at some time in the future. Financial liabilities of this magnitude support the NRC's view that the short-term timeframe is the most likely outcome.

Appendix B in the GEIS has been revised to provide further clarification of the basis for the Commission's conclusions concerning the feasibility of geologic disposal. No changes were made to the Rule as a result of these comments.

(59-10) (112-20-1) (163-7-3) (208-2) (222-13) (244-11-6) (250-7-4) (431-5) (459-7) (532-6) (544-23) (544-5) (556-2-7) (611-25) (714-1-10) (818-1) (827-2-4) (827-2-5) (827-5-6) (919-4-8) (942-9)

D.2.18.2 – COMMENT: Commenters expressed concerns regarding the adequacy of the evaluation of future impacts in the GEIS. Although some commenters questioned the credibility of the estimates of future impacts for the short-term timeframe, the majority of comments expressed concern regarding the long-term and indefinite timeframes. These concerns were mainly attributed to uncertainty in how conditions may evolve in the future. Commenters stated that the impacts, including costs, during the indefinite period need to be analyzed, and that, based on the impact determinations of SMALL in the draft GEIS, the analysis of costs appears inadequate. In contrast, one commenter stated that with proper maintenance and monitoring spent fuel could be indefinitely stored in pools or dry casks.

RESPONSE: The NRC agrees that evaluation of future environmental impacts are uncertain due to uncertainties in future conditions, however, the presence of uncertainty does not invalidate nor preclude the development of reasonable determinations of potential environmental impacts in the GEIS. Section 1.8.3 of the GEIS presents assumptions used for evaluating environmental impacts that provided appropriate and reasonable bounds for projecting future conditions and activities related to continued storage (e.g., see response to comments in Sections D.2.18.8 and D.2.19.1 of this appendix.

The NRC does not agree that the adequacy of the GEIS should be based on the impact determinations being SMALL. The GEIS fully describes the evaluations and impact determinations for each resource area and each timeframe. The NRC has responded to comments for each resource area, including postulated accidents and climate change, made any necessary changes to the GEIS, and determined the GEIS evaluations are appropriate (see Chapters 4 and 5 for at-reactor and away-from reactor storage impacts.

The suggestion that costs of continued storage be considered in the GEIS is addressed in Section D.2.18.1 of this appendix. Except for the changes made to the GEIS discussed in Section D.2.42.1, no changes were made to the GEIS or Rule as a result of these comments.

(112-20-2) (163-39-1) (163-12-2) (163-24-2) (163-16-7) (208-1) (208-3) (239-2) (245-14-4) (250-17-1) (250-17-2) (250-26-2) (250-69-3) (250-9-3) (250-5-4) (250-18-5) (262-4) (326-21-3) (326-53-4) (341-1-16) (341-1-20) (373-10) (402-3) (417-10) (431-7) (552-1-25) (553-1) (652-2) (674-5) (701-4) (714-1-1) (805-1) (823-76) (823-77) (860-3) (897-4-1) (919-2-1) (919-2-3)

D.2.18.3 – COMMENT: Many commenters stated that the GEIS timeframes are too long or expressed confusion about them. Some commenters suggested that the GEIS use shorter timeframes and not include the consideration of long-term storage. Other commenters considered long storage times to be permanent storage or "de-facto" disposal, which they assert is contrary to the NWPA. Some commenters also expressed support for the reasonableness of the timeframes.

One comment suggested that the NRC add text to Section 1.8.2 of the GEIS to clarify that the timeframes presented are just one analytical approach that ensures all spent fuel is analyzed for the entire period before geologic disposal and that other analytical approaches would have worked just as well.

RESPONSE: The NRC acknowledges the comments in support of the timeframes selected, and agrees with the comment that NRC could have used different analytical approaches (i.e., different time periods) to analyze the environmental impacts of continued storage. However, the NRC disagrees that consideration of long-term storage should not be included in the GEIS. Regardless of the number and length of specific timeframes, the GEIS needs to evaluate and disclose the impacts of continued storage. However, sufficient uncertainty remains in the timing of the effort to open a repository that the NRC cannot completely rule out the possibility that a repository will not be available by the end of the short-term timeframe. The NRC has therefore prepared an analysis of an additional 100 years of continued storage (the long-term timeframe) and, in accordance with the direction of the Court of Appeals, has analyzed the indefinite timeframe.

The timeframes selected for the GEIS conform to the GEIS assumption that dry cask storage systems would be replaced every 100 years. The NRC believes the replacement period provides reasonable increments of time for evaluating environmental impacts because the replacement of dry cask storage systems is likely to be more environmentally significant than routine storage operations. In addition, replacement activities provide a distinct period of time to analyze. Although the GEIS evaluates the impacts of storage activities for all three timeframes, it does not authorize storage during these timeframes. Authorization for storage, if it were ultimately pursued, would require separate licensing actions with requisite environmental analysis.

The NRC notes that some comments expressed confusion regarding the timeframes and their relationship to licensed facility life. As explained in the GEIS, including Section 1.8.2, the environmental impacts considered in the GEIS are for the time period "after" the licensed life for reactor operations. At that time, the licensee would no longer be authorized to operate a reactor, but would continue to store spent fuel onsite under either its 10 CFR Part 50 or Part 52 license, or a 10 CFR Part 72 license. During this time, the licensee would remain under the NRC's regulatory control and NRC inspections and oversight of storage facilities would continue. The NRC monitors the performance of ISFSIs (at both decommissioned and

shutdown reactor sites and operating reactor sites) by conducting periodic inspections. As discussed in Section D.2.18.4, revisions to Section 1.8.2 of the GEIS have been made to provide further context for the evaluation of the impacts after licensed life that also provide clarity for the timeframes considered. No changes were made to the Rule as a result of these comments.

(219-8) (262-6) (326-43-1) (447-2-20) (447-2-3) (544-14) (544-20) (544-24) (544-29) (622-1-11) (622-1-14) (637-8) (646-17) (689-3) (698-1) (819-2) (836-52) (919-7-20) (919-6-6) (930-3-4)

D.2.18.4 – COMMENT: Some commenters stated that the timeframes in the GEIS, which begin at the date the plant ceases operations, do not account for casks that have been loaded and are sitting for years prior to the cessation of plant operations. Commenters requested that the consideration of storage run from the date that the spent fuel is put into a cask, not the date that the plant ceases operations. One commenter noted that the 100-year timeframe for cask replacement does not take into consideration any information from the manufacturer of the casks, such as a warranty or statement on the useful life of the cask.

One commenter stated that the NRC should delete any reference to the storage timeframe including operations of the plant (i.e., text starting on page 1-12 and continuing to 1-13 in Section 1.8.2 of the draft GEIS) to make clear that continued operation of the plant is separate and distinct from storage times for dry casks.

RESPONSE: The NRC agrees in part and disagrees in part with the comments. In general, the NRC agrees with commenters that the consideration of continued storage needs to consider the age of storage facilities in place at the beginning of the continued storage period; however, the NRC disagrees with the assertions that the environmental impacts of storage of spent fuel during reactor operations should be included in the GEIS.

Prior to the completion of an individual licensing action (e.g., review for a combined license), the NRC will conduct a site-specific environmental review and document the results of this review in an EA and FONSI or EIS. The environmental impacts of storing spent fuel at reactor facilities during the licensed life for reactor operations will be evaluated during that review. Though those impacts are assessed separately, they will be considered in conjunction with the impacts in the GEIS at the time of licensing, and thus do not need to be considered as part of the GEIS.

As explained in the GEIS, including Section 1.8.2, the environmental impacts considered in the GEIS are for the time period after the licensed life for reactor operations and the age of the storage facilities are considered in the analysis. For example, the GEIS assumption that replacement of the entire ISFSI would occur over the course of each 100-year interval, starting at the beginning of the long-term storage timeframe (see Section 1.8.3 of the GEIS) specifies the beginning of the long-term storage timeframe because: (1) a typical spent fuel pool reaches its licensed capacity limit about 30 years into the licensed life for operation of the reactor after

which some spent fuel would need to be removed from the spent fuel pool and transferred into a dry cask storage system; (2) for a reactor that is assumed to operate for 80 years the spent fuel that was first placed in dry casks would have been stored on the order of 50 years at the beginning of the short-term timeframe; and (3) the beginning of the long-term timeframe, which occurs 60 years after the end of reactor operations, represents a period of approximately 100 years of dry cask storage for the spent fuel that was initially placed into dry cask storage, which is the time period over which it is assumed a dry cask storage system would be replaced. Thus, the consideration of replacement of dry cask storage systems at the beginning of the long-term storage timeframe explicitly accounts for the assumed lifetime of the dry cask storage system. The NRC has revised Sections 1.8.1, 1.8.2, and 1.8.3 of the GEIS to clarify the approach in the GEIS for evaluation of cask lifetimes in the context of evaluating impacts after licensed life for reactor operations. No changes were made to the Rule as a result of these comments.

The consideration of “warranty” type information, as suggested by the commenter, is not expected to add further significant information beyond what has already been considered for estimating the behavior and longevity of dry cask storage systems. Appendix B of the GEIS describes the design of storage casks as well as national and international experience with storage casks in support of the longevity of dry casks (e.g., current understanding for slow degradation rates of dry storage casks). The GEIS assumes casks will be replaced every 100 years as a conservative assumption to facilitate the NRC’s environmental analysis. For example, this assumption results in increased land use and generation of concrete waste. The NRC notes that the 100-year replacement interval is not intended to convey that dry casks and facilities need to be replaced every 100 years to maintain safe storage. The NRC considered experience with dry cask storage systems, information related to certification and regulatory oversight of dry cask storage systems, and monitoring and maintenance of dry cask storage systems to provide an informed basis for understanding the behavior of dry cask storage systems and estimating a replacement interval for the GEIS that is considered conservative (i.e., replacement times would most likely be longer than 100 years).

(328-2-4) (417-1) (783-1-5) (783-2-5) (836-35) (930-2-9)

D.2.18.5 – COMMENT: Commenters expressed concern that the assumptions in the GEIS regarding the longevity of storage casks and pools are based on NRC experience with spent fuel storage for shorter durations than the lifetimes of up to 140 years for spent fuel pools and 100 years for spent fuel casks projected in the GEIS.

RESPONSE: The NRC agrees in part and disagrees in part with these comments. The NRC agrees that spent fuel is currently stored in spent fuel pools and dry casks for less time than the NRC assumes could occur in the GEIS (i.e., the GEIS assumes a spent fuel pool is operational for up to 140 years and dry casks are in service for 100 years). The NRC disagrees with the comments’ concerns that the experience with spent fuel storage does not support the storage times considered in the GEIS because the assumed GEIS storage times are longer than the current storage duration.

Appendix B of the GEIS provides the technical basis for the NRC's conclusions that it is feasible that spent fuel may be safely stored in spent fuel pools and dry casks for the periods projected in the GEIS. This analysis in Appendix B includes support for the robust structural design and construction of spent fuel pools and dry cask storage, their slow rate of degradation, and programs for monitoring and maintenance at storage facilities. In response to public comments, the NRC has revised Appendix B to add additional information regarding the role of monitoring and maintenance programs for collecting operational experience. No changes were made to the Rule as a result of these comments.

(544-13) (783-3-21) (783-2-7) (867-2-4) (920-24)

D.2.18.6 – COMMENT: One commenter suggested that the GEIS could be developed around scenarios that present the expected impacts on the environment at each of the timeframes used in the GEIS.

RESPONSE: The NRC agrees that the GEIS could present the environmental impacts using a 'scenario' approach as suggested by the comment. However, the NRC has decided to use its well-established format for EISs; the GEIS is organized to present the environmental impacts for each timeframe according to the specific resource areas of the affected environment. The comment did not suggest the GEIS approach was inappropriate. No changes were made to the GEIS or Rule as a result of this comment.

(867-1-6)

D.2.18.7 – COMMENT: One commenter raised concerns with quality assurance violations related to the design and manufacture of dry casks and questioned how the NRC could have confidence in indefinite dry cask storage when significant quality assurance issues exist.

RESPONSE: The NRC disagrees with the comment's assertion that past quality assurance issues undermine confidence in the safety of dry cask storage systems. Although there have been isolated instances involving dry cask storage system design or operational issues, the extent of the issues identified have not called into question the safety of dry cask storage systems. Further information on monitoring and maintenance of dry cask storage systems is provided in Section D.2.38.19. No changes were made to the GEIS or Rule as a result of this comment.

(327-10-3)

D.2.18.8 – COMMENT: Commenters questioned the technical and factual basis for the assumptions that (1) pool storage would end 60 years after the licensed life for operation of the reactor, (2) storage facilities (i.e., dry casks) would be replaced every 100 years, and (3) the amount of spent fuel considered in a timeframe was appropriate. Some commenters stated that

storage assumptions need to be based on regulatory requirements, others asserted that experience did not challenge the GEIS assumptions.

RESPONSE: The NRC agrees in part and disagrees in part with the comments. The NRC agrees that assumptions made in the GEIS for evaluating environmental consequences are not always based on regulatory requirements; however, the NRC disagrees with statements in the comments that the assumptions in the GEIS need to be based on regulatory requirements.

The NRC has made reasonable assumptions that support the analysis of the environmental impacts of continued storage in the GEIS. The cessation of pool storage 60 years after the licensed life of the reactor is reasonable because (1) there is no need to cool spent fuel in a pool for more than 60 years after a reactor stops operating; (2) operational costs associated with pool storage exceed dry cask storage costs; and (3) experience with decommissioning of nuclear power plants indicates that spent fuel pools are decommissioned before the end of the 60-year period. No dry cask storage systems have reached a 100-year service time; however, current information supports low degradation rates for dry cask storage systems (see Appendix B of the GEIS and Sections D.2.38.5 and D.2.38.19 of this appendix for further details).

The NRC is not aware of information that would suggest that dry cask storage systems would need to be replaced after 100 years of service. However, the NRC believes that the 100-year replacement period provides a reasonable timeframe for the routine replacement of dry storage systems, and that actual storage facility replacement will be needed less frequently than assumed in the GEIS. The conservative nature of this assumption ensures that the environmental impact determinations in the GEIS are unlikely to underestimate the actual environmental impacts, should continued storage be necessary.

The GEIS considers the environmental impacts from continued storage for an at-reactor site and an away-from-reactor ISFSI. The amount of spent fuel considered for each site is consistent with the operational volume of a single facility (i.e., 1,600 metric tons of uranium [MTU] of spent fuel for the at-reactor site and 40,000 MTU for an away-from-reactor ISFSI). No changes were made to the GEIS or Rule as a result of these comments.

(163-2-4) (163-1-5) (200-3) (244-14-3) (244-14-4) (473-10-1) (473-12-11) (473-12-14) (473-11-2) (473-17-2) (473-12-8) (473-12-9) (556-2-4) (608-14) (637-6) (669-10) (916-2-1) (916-2-2) (919-3-5)

D.2.19 Comments Concerning GEIS Assumptions – Institutional Controls

D.2.19.1 – COMMENT: Many commenters questioned the reasonableness of the draft GEIS assumption that effective institutional controls will continue indefinitely into the future. Some of these commenters argued that the NRC could not support a conclusion that loss of institutional controls is remote and speculative. Other commenters believe that the NRC's conclusions

regarding institutional controls are arbitrary and capricious. These commenters argue that the NRC must analyze the environmental impacts of continued storage, including indefinite storage, without effective institutional controls. Some commenters requested that the NRC analyze the total loss of institutional controls and provided examples of how the effectiveness of institutional controls is limited in time for evaluating disposal of radioactive materials. They also asserted that many existing authorities, including the National Research Council, have concluded that long-term waste and remediation policy should be based on the assumption that institutional controls will eventually fail (e.g., the National Academy of Sciences (NAS) reported that "institutional controls will fail" in its study on buried and tank waste (NAS 2000). Commenters recommended that the NRC consider using the DOE Yucca Mountain EIS (DOE 2008), which evaluated the loss of institutional controls after 100 years, as a starting point for the NRC's evaluation of the loss of institutional controls. Some commenters identified what they considered to be limitations in the DOE's analysis of loss of institutional controls.

RESPONSE: The NRC agrees in part and disagrees in part with these comments. As described below, the NRC agrees with comments that there are limitations in the DOE's analysis of the loss of institutional controls for the Yucca Mountain EIS (DOE 2008). The NRC disagrees with comments that requested additional detailed analysis of the loss of institutional controls in the GEIS; to the extent that the comments requested a qualitative discussion of the loss of institutional controls, the NRC has provided this discussion here and in revisions to the GEIS. In the GEIS, the NRC's approach to institutional controls is based on: (1) an evaluation of reasonably foreseeable environmental impacts of continued storage requires an assumption that institutional controls will be maintained; (2) the most reasonable assumption is that institutional controls will continue; (3) accidents provide a helpful surrogate for analysis of a temporary lapse of institutional controls, including perspectives on the environmental implications of such a lapse; and (4) although too remote to calculate meaningfully, a permanent loss of institutional controls would likely have catastrophic consequences. Detailed discussions of these topics are provided below.

An evaluation of reasonably foreseeable environmental impacts in the GEIS requires an assumption that institutional controls will be maintained

In *New York v. NRC*, the Court of Appeals held that because the NRC had not demonstrated that the unavailability of a repository was "remote and speculative," NEPA required the NRC to analyze the environmental impacts of continued storage in the absence of a repository (D.C. Cir. 2012). The NRC believes that, if geologic disposal were not possible, national spent fuel policy would change but would not default to relying on the storage facilities as they currently exist—the design of facilities and the regulations governing those facilities would change to accommodate the new policy. Further, the NRC is not in a position to predict how the policy would change or what technical advancements would become available to serve a new national policy if geologic disposal were not feasible or achievable by consensus. Analyzing the

consequences of failing to secure a repository requires assumptions about what indefinite continued storage would encompass. Because the current methods of continued storage employ institutional controls, the NRC considered whether it was reasonable to assume that institutional controls would remain in place in the timeframes being considered, and as explained below, concluded that the assumption is reasonable for the purposes of this GEIS. While the NRC does not believe that the indefinite storage scenario described in the GEIS is likely, the NRC has analyzed this scenario in the GEIS to provide a conservative picture of the environmental impacts should a repository not become available by the end of the long-term timeframe.

As stated in Chapter 1 of this GEIS, the Federal government, by national policy set forth in the NWPA, has assumed responsibility for the permanent disposal of HLW and spent fuel. The NWPA specifies that the cost of both interim storage and permanent disposal is the responsibility of the generators and owners of the waste. Further, the NWPA defines the current national strategy for disposition of spent fuel as disposal in a geologic repository and that the geologic repository strategy was recently reaffirmed by the Blue Ribbon Commission on America's Nuclear Future (BRC 2012).

In response to the Blue Ribbon Commission's report (BRC 2012), DOE expressed its intent to provide repository capacity by 2048, which is about 10 years before the end of the short-term timeframe for the oldest spent fuel storage facility within the scope of this analysis (DOE 2013a). In this GEIS, the NRC concludes that a repository is most likely to be available by the end of the short-term timeframe, and failing that, likely to be available by the end of the long-term timeframe. In the event a repository could not be sited by the end of the long-term timeframe, the NRC has concluded that it is not reasonable to assume that national policy would default to complete inaction so as to leave spent fuel in dry casks unprotected, much less unattended or ultimately forgotten. However, because an alternate path forward is unknown at this point, the NRC has not attempted to forecast a different solution and assumes that temporary storage continues indefinitely.

Should the national policy change from geologic disposal to permanent storage (i.e., on-site or away-from-reactor "disposal" in facilities that resemble ISFSIs), the NRC expects that planning and decision-making for permanent storage of spent fuel would take into account the appropriate balance of engineering design and institutional controls to address the challenges presented by permanent storage. There is no national historic precedent and, more particularly, no regulatory history of nuclear materials to suggest that the Federal government, including the NRC in its assigned role under the AEA, would not engage in planning and decision-making regarding changes or enhancements that would be necessary to accommodate permanent storage, in the unlikely event that option was adopted. Should national policy change to a policy of permanent storage, the NRC believes that significant regulatory changes and design modifications would be required to transfer spent fuel to offsite facilities or convert continued storage facilities to onsite permanent storage facilities. Further, even if a repository does not

become available, the NRC believes that, based on the factors discussed in the next section, institutional controls will be maintained as long as the spent fuel needs to be stored.

With respect to costs, the NRC acknowledges that, because of delays in the siting and licensing of a repository, the Federal government bears an increasing share of the financial responsibility for storage costs, and it may become responsible for paying all costs associated with spent fuel storage at some time in the future. Although the annual costs for continued storage are manageable, cumulative costs will continue to increase. The Federal government has estimated it will pay a total of approximately $20 billion in damage awards and settlements by the year 2020 and $500 million per year after that, if DOE does not accept fuel by 2021 and spent fuel continues to accumulate at reactor sites (GAO 2013). Thus, the escalating costs of continued storage provide incentive for the Federal government to implement the national policy for disposal of spent fuel in a deep geologic repository.

The assumption that institutional controls will continue enables an appropriate and reasonable evaluation of the environmental impacts of continued storage over an indefinite timeframe. Absent the stability and predictability that follows from institutional controls, including but not limited to NRC licensing and regulatory controls, few impacts could be reliably forecast. The "hard look" required by NEPA would quickly become unfocused, highly speculative, and ill-defined. Analyzing the impacts that might result from a permanent and total loss of institutional controls would require NRC to reach unsupportable conclusions about how and when our nation and its government, institutions, and social cohesiveness might degrade or even collapse. Such speculation would preclude meaningful calculations of impacts for the timeframes envisioned in the GEIS.

The assumption that institutional controls continue is reasonable

Consistent with NEPA's rule of reason, which provides that agencies conduct an analysis according to the usefulness of the information to the decisionmaker and full disclosure to the public of predictable benefits and impacts, this GEIS assumes that institutional controls at any storage site are maintained. This assumption is reasonable for two reasons: First, in any timeframe it would be illogical for any government at any level to abandon the storage facilities, given the particular hazards of the fuel. Continued storage is designed to allow the eventual transport of the spent fuel to a repository, not to permanently sequester the material from the environment without continued active oversight and maintenance. Second, these highly visible storage facilities are much less likely than geologic repositories to simply be forgotten.

Spent fuel is highly hazardous, requiring robust containment structures to minimize exposure risks. Spent fuel in storage facilities on the surface of the earth presents a visible hazard that requires active oversight to ensure safety and security measures are maintained and functioning as designed. Storage facilities remain under license and have aging management programs to support their maintenance and monitoring. Thus the visibility of storage facilities and the

hazards of spent fuel strongly support the reasonableness of assuming the continuation of institutional controls throughout all of the timeframes analyzed in the GEIS. While changes may occur over time to governments or society, highly visible, hazardous facilities are unlikely to be left abandoned or forgotten. As a result, it is a reasonable assumption that any government would, in the interest of its citizenry, ensure appropriate oversight (e.g., monitoring, maintenance, replacement of facilities as needed) remains in place, consistent with radiation protection principles and regulatory restrictions, until final disposition of the spent fuel occurs. Accordingly, the NRC has determined that the assumption of continued institutional controls is reasonable in each of the timeframes considered in the GEIS.

In contrast, consideration of the loss of institutional controls in the context of disposal of spent fuel (e.g., as in DOE's Yucca Mountain EIS [DOE 2008]) is not directly applicable to storage—NRC regulations for deep geologic disposal of spent fuel recognize there is a point when the repository ceases operation, is permanently closed, and the license terminated. After permanent closure, regulations specify institutional controls (e.g., the requirements to place markers to identify what is buried deep below the surface of the earth and to maintain records regarding the hazard). However, these institutional controls are part of a defense-in-depth approach to disposal; the facility design is not permitted to rely on those institutional controls to meet post-closure safety requirements.

Additionally, as identified in the public comments for this proceeding, a repository applicant is required to prepare a stylized calculation to evaluate the consequences should humans inadvertently disrupt the repository (see 10 CFR 63.322). These requirements for disposal address the situation where human activities could occur at a disposal site that is no longer recognizable at the earth's surface following waste burial, permanent closure of the facility, and license termination. However, in contrast to underground disposal facilities, storage installations are not designed to be abandoned and will remain highly visible on the earth's surface. As explained previously, the visibility and purpose of temporary storage facilities differ significantly from those of permanent disposal facilities, supporting the reasonableness of assuming that institutional controls over cask storage will be maintained.

The NRC recognizes information presented by the National Academies National Research Council and others regarding the durability of institutional controls (i.e., *Technical Bases for Yucca Mountain Standards*, NAS 1995; and *Long-Term Institutional Management of U.S. Department of Energy Legacy Waste Sites*, NAS 2000). The NRC is also aware of international reports that discuss the durability of institutional controls (e.g., *The Roles of Storage in the Management of Long-Lived Radioactive Waste*, NEA 2006; and *Disposal of Radioactive Wastes*, Specific Safety Requirements [SSR-5], IAEA 2011a). However, this commentary does not conclude that a permanent loss of institutional controls is likely or that effective government and governmental oversight of continued storage will cease in the distant future. Rather, these documents focus on developing plans and strategies regarding what should be done today to

address future uncertainty due, in part, to institutional controls. For example, the Board on Radioactive Waste Management, in its study on long-term institutional management, stated: "No plan developed today is likely to remain protective for the duration of the hazards. Instead, long-term institutional management requires periodic, comprehensive reevaluation of those legacy waste sites still presenting risk to the public and the environment to ensure that they do not fall into neglect and that advantage is taken of new opportunities for their further remediation." (NAS 2000). While regulations may need to be updated over time, the NRC does not view possible future regulatory updates as an impediment to a current understanding of likely environmental impacts of continued storage. Further, future regulatory development would be expected to be undertaken to enhance and/or improve the effectiveness of regulatory oversight.

Accident analysis provides a perspective on the environmental impacts of a temporary lapse of institutional controls

The GEIS considers the environmental impacts of accidents during continued storage (e.g., certain cask drop events) in Section 4.18 of the GEIS. These accidents, for the purposes of this NEPA analysis may serve as a surrogate or proxy for the temporary loss of institutional controls, and the impacts of these accidents are representative of impacts from a temporary loss of institutional controls. An accident condition approximates a limited period during which institutional controls are less than effective, after which the NRC expects that institutional controls and oversight would resume. Consequences from accidents resulting in small releases represent a lapse in more routine maintenance tasks, whereas accidents resulting in significant radioactive releases constitute a reasonable surrogate to evaluate consequences that might result from hypothetical acts of radiological sabotage or terrorism in the indefinite timeframe. Consideration of accident consequences thereby provides a reasonable basis for understanding the consequences of continued storage should institutional controls prove temporarily ineffective.

Given the physical characteristics of spent fuel, in most cases, the level of institutional controls necessary for safety would diminish over time and the consequences associated with accidents made possible by lapses in institutional controls would be expected to decrease with the passage of time. The thermal output of spent fuel decreases by approximately a factor of ten in the first 100 years after it is removed from the reactor, which means that maintenance activities and related institutional controls could be adjusted, as appropriate, to account for lower thermal loads. Therefore, the consequences of ineffective institutional controls will diminish over time because lower thermal loads should reduce the need for maintenance activities to maintain safety and lower radioactivity should reduce the consequences of releases of spent fuel. In contrast, institutional controls with respect to security may not diminish. As discussed in Section 4.19.2 of the GEIS, because spent fuel radiation levels will decrease over time, spent fuel could become more susceptible to theft or diversion (i.e., a more attractive target to individuals with

malevolent intent). For this reason, additional security requirements may be necessary in the future if spent fuel remains in storage, to ensure that risk posed due to theft or diversion remains very low.

A permanent loss of institutional controls could have catastrophic impacts

Some comments recommended that the NRC consider the evaluation of the loss of institutional controls based, in part, on DOE's Yucca Mountain EIS (DOE 2008), which included an analysis for the loss of institutional controls for storage facilities under the no-action alternative. The NRC notes that DOE's proposed action in that instance was the construction of a repository and that, as a result, analysis of the no-action alternative was required by NEPA. Permanent disposal of spent fuel is a DOE responsibility, and DOE's analysis was designed to evaluate the environmental impacts of not meeting that responsibility. DOE evaluated the storage of the total volume of HLW (i.e., 70,000 MTU) that would be disposed at the repository and, as a means of evaluating what would happen if it took no action, it considered the consequences of a simultaneous loss of institutional controls at 72 commercial and 5 DOE storage sites. In contrast, this GEIS considers the environmental impacts of continued storage at a single generically profiled commercial facility. While the DOE analysis may have sufficed for DOE's Yucca Mountain EIS, the NRC does not believe that the passive scenario assumed as part of the no-action alternative there provides a meaningful method of analyzing the consequences of indefinite storage for purposes of analyzing continued storage in this GEIS.

DOE's analysis evaluates degradation of the storage structures in the absence of human intervention (i.e., that neither government nor local residents, or even malevolent forces, would respond to the degradation in any fashion over a 10,000-year period). DOE did not state that its analysis of the loss of institutional controls represents the reasonably foreseeable impacts of permanent aboveground storage. To the contrary, DOE stated that neither of the no-action scenarios is likely to occur (DOE 2002). However, DOE's Yucca Mountain EIS (DOE 2008) concluded that the consequences of the potential loss of institutional controls could be "catastrophic" in some resource areas.

As discussed previously, merely assuming loss of institutional controls in the distant, but undefined, future is not enough for the NRC to reasonably foresee when and how the loss of institutional controls might occur, and the consequences of that loss, with the kind of detailed and scientifically supportable analysis of resource impacts that the GEIS provides in every other respect for decision-makers and the public. Rather, the NRC would need to hypothesize the extent to which controls must fail before spent fuel would be effectively abandoned. The difficulty in predicting future consequences is further compounded by the lack of any credible way to foresee the combination of human and natural forces that might act on abandoned storage casks and cause a release. In addition, the baseline human environment becomes increasingly unpredictable the further out in time projections are made.

Nevertheless, the NRC can state broadly that, if institutional controls should be lost through a gradual dissolution of government or an apocalyptic event, unmitigated physical deterioration of spent fuel casks and cladding over decades, if not centuries, would eventually expose radionuclides to the environment. While the consequences—as explained above—are unpredictable, the NRC can state qualitatively that the consequences of such a catastrophe to the environment and public health could be similar to the impacts DOE analyzed for the no-action alternative (scenario 2—permanent loss of institutional controls) in its Yucca Mountain EIS (assuming a similar number of facilities were considered). Thus, in the event of a permanent loss of institutional controls, the resulting consequences to the environment across nearly all resource areas would be clearly noticeable and destabilizing.

As a result of comments, NRC has revised Section 1.8.3 and Appendix B of the GEIS to clarify its assumptions on institutional controls.

(2-3) (4-1) (30-5-1) (30-8-2) (45-8-3) (45-8-6) (93-1) (93-2) (93-5) (97-1) (112-35-1) (112-20-3) (112-35-3) (163-15-10) (163-2-5) (163-15-8) (163-34-8) (187-2) (208-4) (219-6) (230-4) (244-5-3) (244-3-7) (245-45-1) (245-43-3) (245-3-4) (245-43-4) (245-29-6) (245-19-7) (246-4-2) (246-22-3) (250-33-2) (250-52-2) (250-68-3) (250-26-4) (250-5-7) (274-4) (287-6) (326-13-1) (326-29-1) (326-34-2) (326-40-2) (326-61-2) (326-39-3) (326-47-3) (326-64-4) (326-56-6) (326-8-6) (327-14-1) (327-30-1) (327-4-2) (327-30-3) (327-20-4) (327-10-6) (327-36-6) (327-4-6) (328-7-1) (328-12-3) (328-3-3) (328-7-3) (328-2-7) (328-1-9) (329-11-2) (329-29-2) (329-11-3) (329-12-5) (329-32-7) (336-7) (341-2-11) (341-2-13) (341-1-21) (341-1-22) (341-2-9) (348-10) (352-10) (377-5-17) (410-22) (419-2) (421-6) (439-1) (447-2-4) (450-2) (451-4) (454-11) (465-2) (505-8) (530-1) (531-2-16) (544-11) (544-26) (547-2) (547-4) (556-2-2) (556-2-5) (604-6) (608-10) (608-6) (608-9) (610-8) (611-23) (615-3) (620-5) (622-1-10) (637-11) (646-16) (648-6) (685-7) (686-5) (693-2-10) (693-2-6) (693-2-7) (693-2-8) (693-2-9) (694-2-11) (694-3-20) (697-3-1) (697-1-28) (701-18) (706-3-1) (706-4-1) (706-3-10) (706-3-11) (706-3-12) (706-3-13) (706-3-14) (706-3-2) (706-2-24) (706-3-24) (706-3-3) (706-3-4) (706-3-5) (706-3-6) (706-3-7) (706-4-7) (706-3-8) (706-3-9) (711-16) (711-18) (711-42) (714-1-21) (714-1-22) (714-1-4) (714-2-5) (716-10) (716-19) (716-3) (716-9) (724-2) (724-3) (734-5) (738-12) (738-13) (738-14) (738-15) (738-16) (738-18) (738-6) (738-7) (738-9) (757-6) (783-1-12) (783-3-22) (783-3-6) (783-2-8) (805-16) (815-3) (818-4) (819-7) (823-2) (827-2-6) (827-2-7) (827-2-8) (836-15) (867-3-1) (867-1-7) (867-1-8) (867-2-8) (867-1-9) (867-2-9) (897-6-16) (897-3-18) (897-3-19) (897-7-2) (897-3-20) (897-3-21) (897-1-7) (898-4-1) (898-3-10) (898-3-11) (898-3-12) (898-3-13) (898-3-14) (898-3-15) (898-3-16) (898-3-17) (898-5-17) (898-3-18) (898-3-19) (898-4-2) (898-3-20) (898-5-26) (898-5-27) (898-4-3) (898-4-4) (898-1-5) (898-4-5) (898-4-7) (898-3-8) (898-4-8) (898-3-9) (908-5) (916-1-14) (916-1-15) (919-2-11) (919-2-13) (919-2-15) (919-2-5) (919-2-6) (919-6-7) (919-6-9) (921-4) (930-1-8) (935-3) (945-6) (951-5) (998-2) (1006-1)

D.2.20 Comments Concerning Site and Activity Descriptions

D.2.20.1 – COMMENT: Several commenters described current spent fuel storage practices. The commenters discussed the safe and robust designs of spent fuel pools and dry storage systems, explained how certain nuclear facilities store and transfer spent fuel from pools to dry casks, and described how the pools and dry storage systems are managed. One commenter noted that the nuclear industry has safely loaded more than 1,700 dry storage systems over the past 30 years, with no releases.

RESPONSE: The NRC agrees that spent fuel is being stored safely in spent fuel pools and dry casks. The NRC will continue its regulatory control and oversight of spent fuel storage. Decades of operating experience and ongoing NRC inspections demonstrate that the NRC ensures that reactor and ISFSI licensees continue to meet their obligation to safely manage spent fuel in accordance with the requirements of 10 CFR Parts 50, 52, and 72. No changes were made to the GEIS or Rule as a result of these comments.

(45-13-1) (45-13-2) (138-3) (250-6-4) (325-14-3) (326-3-2) (916-3-18)

D.2.20.2 – COMMENT: Some commenters expressed the belief that NRC has not adequately described in the GEIS how spent fuel is transferred between canisters or casks, and that therefore the public is unable to assess the risk of spent fuel transfer. One commenter questioned how, if canisters are hermetically sealed, the casks and storage pads could become contaminated and create additional LLW.

RESPONSE: The NRC disagrees with the comment that the GEIS does not contain sufficient details regarding transfer and management of spent fuel in canisters and casks. Chapter 2 of the GEIS provides details regarding the design of dry casks and transfer of spent fuel that are appropriate for evaluating the environmental impacts. This chapter includes both descriptions of the canisters and casks as well as conceptual sketches of a DTS. In addition, references are provided for the information discussed if a reader wishes to examine details further. Section 2.2.2.1 (Construction and Operation of a DTS) has been revised to provide additional detail regarding the handling of damaged fuel (also see Section D.2.17.4 of this appendix).

With regard to the contamination of storage canisters, Section 4.15.2.1 of the GEIS states the following: “Because storage canisters come into direct contact with spent fuel, it is possible that the metal components could become contaminated or activated and require disposal as LLW (EPRI 2010a).” Decontamination of potentially contaminated components is expected to remove surface contamination, and activation of metal components is expected to result in a small amount of radioactive material. Thus, the GEIS assumes there would be some radioactive material generated during cask replacement, including portions of the casks and

storage pads, that would be managed and disposed of as LLW. No changes were made to the Rule as a result of these comments.

(410-25) (836-46) (930-2-20)

D.2.20.3 – COMMENT: Commenters expressed concern about the nature of spent fuel and stated that the fuel is not actually spent. One of the commenters described the process of fission and the resulting generation of daughter elements. The commenter stated that the products of fission (e.g., plutonium, cesium, strontium) are radioactive and dangerous, and that nuclear waste should not be considered to be "spent" in the same manner as, for example, a burned log. Another commenter added that spent fuel rods stored in pools generate an enormous amount of heat and create radioactive water.

RESPONSE: The NRC agrees that spent fuel is still thermally hot and highly radioactive. The NRC refers to the fuel as "spent" because the fuel's fission process has slowed and the fuel is no longer efficient in creating electricity. The NRC agrees that spent fuel can create radioactive water, and this is discussed further in Section E.2.1 of the GEIS, which identifies the radionuclides of concern in spent fuel pool water.

A glossary has been added as an appendix to the GEIS that includes a definition of spent fuel. No changes were made to the Rule as a result of these comments.

(293-3) (326-57-1) (326-44-2)

D.2.20.4 – COMMENT: Several commenters suggested editorial or substantive revisions, clarifications, and corrections to the text and tables in Chapter 2 of the GEIS. These suggestions are summarized by subject matter below:

- A commenter believed the NRC should make it clear in this chapter that Federal law prohibits the construction and operation of an interim storage facility and that the NRC's termination of the Yucca Mountain licensing review was illegal.
- Commenters requested clarifications about the inclusion of MOX fuel in this GEIS. One commenter wanted it noted that MOX fuel is "hotter" and more radioactive than typical fuel and therefore would require more shielding and time to cool. Another commenter believed the language in the GEIS and Rule regarding MOX fuel should be bolstered by analysis in the Yucca Mountain EIS.
- A commenter listed various text sections that should be updated to reflect data and values from the nuclear power industry's records, such as the annual rate of generation of spent fuel and the annual discharge of spent fuel per reactor. The commenter stated that the GEIS estimate of high-burnup fuel is likely too low and that a figure of 22 MTU per year should be used. This commenter also clarified the conditions for making changes to programs supporting reactor operation, stating that the NRC should recognize that

decommissioned reactors may have the option of keeping spent fuel in pools until it is collected for transport offsite. The commenter suggested clarifying the language concerning the management of confinement boundary material (to prevent a loss of confinement).

- A commenter requested clarification about whether or not 10 CFR Part 72 covers the licensing of dry transfer and repackaging systems.
- A commenter noted that the Crystal River Nuclear Plant and Kewaunee Power Station have shut down, and that the San Onofre Nuclear Generating Station and Vermont Yankee Nuclear Power Station have announced that they will shut down by the end of 2014.
- A commenter stated that "Private Fuel Storage Environmental Impact Statement" should be capitalized. The commenter also noted that the extension of the ISFSI initial license term from 20 to 40 years represents a decrease in oversight.

RESPONSE: The NRC has reviewed each of these specific comments and made changes to Chapter 2 of the GEIS as appropriate and described below.

The NRC agrees in part and disagrees in part with the comments about the Yucca Mountain licensing process. The NWPA states that long-term storage of high-level radioactive waste or spent fuel in a monitored retrievable storage (MRS) facility is an option for providing safe and reliable management of such waste or spent fuel, and that such a facility would be owned and operated by the Federal government. The NWPA provides limitations on where an MRS facility can be located and that construction of such a facility may not begin until the Commission has issued a license for the construction of a repository. Federal law, however, does not prohibit the construction of privately owned ISFSIs. Concerning the Yucca Mountain repository license application review, see Sections D.2.45.4 and D.2.53 of this appendix for discussions regarding the status of the NRC's review. In addition, text has been added to Appendix B of the GEIS to provide more information about this issue.

The NRC agrees in part with the comments about MOX fuel and disagrees in part. The NRC agrees that MOX spent fuel is generally thermally hotter and more radioactive than other typical light water reactor (LWR) spent fuel, assuming similar burnup or time in the reactor. The NRC does not agree that it is appropriate for the GEIS to reference the statement in Section A.2.4.5.1.1 of the 2002 Yucca Mountain EIS (DOE 2002), which states, "[b]ecause of the similarities in the two fuel types, impacts to the repository would be small." The NRC agrees that the fuel types are similar and that the differences in impacts from these fuel types would not be significant. However, this statement is not appropriate for use in the GEIS's discussion of the impacts from continued storage because it is referring to impacts on a repository and because it does not compare the differences in impacts between MOX and other typical light water reactor fuels. Section D.2.38.19 of this appendix provides additional information regarding the analysis in the GEIS of various fuel types. In addition, an Appendix I has been added to the GEIS to provide more information on the various fuel types.

Concerning the several comments providing data and information about nuclear power plant operation and spent fuel generation, the NRC has reviewed each of these comments and made changes in Chapter 2 of the GEIS, as appropriate.

Concerning the applicability of 10 CFR Part 72 to dry transfer and repackaging operations, 10 CFR Part 72 regulations do apply to these activities. Section 2.1.4 of the GEIS describes how the NRC has already licensed a facility with substantially similar capabilities (i.e., the Idaho Spent Fuel Facility [see NRC 2004d and NRC's Safety Evaluation Report for this facility (NRC 2004e)]). Clarifying text has been added to Section 2.1.4 concerning the applicability of 10 CFR Part 72 to a DTS and repackaging activities.

The NRC agrees with the comment about closed power plants. Appendix G of the GEIS notes that the Crystal River and Kewaunee plants have ceased operations. Chapter 2 of the GEIS has been updated to reflect the status of these plants, as well as the San Onofre and Vermont Yankee plants. Appendix G of the GEIS has been updated to reflect the status of the San Onofre and Vermont Yankee plants.

The NRC agrees with the editorial comment concerning PFS and has made the change as noted. The NRC disagrees that extending the initial license period to 40 years represents a decrease in oversight. Regardless of the period of operation of the license, operators still must meet certain requirements and standards, conduct inspections, and develop aging management programs as necessary. Further information about the NRC's oversight of dry cask storage is provided in Sections D.2.38.3, D.2.38.4, D.2.38.5, and D.2.38.8 of this appendix. No changes were made to the Rule as a result of these comments.

(544-27) (544-28) (694-2-24) (827-7-10) (827-7-11) (827-7-12) (827-7-13) (827-7-14) (827-7-15) (827-7-16) (827-7-22) (827-7-5) (827-7-6) (827-7-7) (827-7-8) (827-7-9) (919-3-10) (919-3-13) (919-4-4)

D.2.20.5 – COMMENT: Referring to text in Chapter 4 of the draft GEIS, a commenter expressed concern that fuel from the damaged Three Mile Island Nuclear Station Unit 2 (TMI-2) reactor core is still generating hydrogen that must be vented from the dry storage system (NUHOMS-12T). The commenter wanted to know if venting is required to prevent gas pressure damage or explosion. The commenter also wanted to know if the hydrogen gas is tritiated, if other radionuclides, including noble gases, are released when the hydrogen is released, and what their decay products are. The commenter asked about the potential impacts of these releases on Idaho residents downwind of the Idaho National Laboratory location where the TMI-2 fuel is stored.

RESPONSE: The NRC disagrees with the comment. Most of the fission products from the TMI-2 fuel debris were vented in accordance with NRC limits during the first several years of storage. Any fission products remaining in the canister are entrained within the fuel debris and

would only be vented in the unlikely occurrence of high temperatures or pressures. Any venting of these remaining fission products would be at trace levels, well below NRC limits for the protection of public health and safety. This also applies to any hydrogen gas, including tritiated hydrogen, that may have been generated as a result of radiolysis (from water trapped in the spent fuel debris at the time the debris was initially placed in the canisters). No changes were made to the GEIS or Rule as a result of this comment.

(919-6-8)

D.2.21 Comments Concerning Land Use

D.2.21.1 – COMMENT: Commenters expressed concern about land-use, economic, and aesthetic impacts caused by the continued long-term storage of spent fuel at decommissioned nuclear power plants. One commenter noted that communities with decommissioned reactors no longer receive the significant financial benefits experienced during reactor operations. The commenter stated that this economic loss should be considered in determining an appropriate use of the land at the decommissioned reactor site including land that might be used for the continued storage of spent fuel.

Another commenter stated local, regional, and state-wide economic and land use impacts were not adequately addressed in the draft GEIS and argued that the effects of long-term spent fuel dry cask storage would not be small. This commenter asserted that continued spent fuel storage at decommissioned reactor sites inhibits alternate economic development of the land. The continued storage of spent fuel ties up the land and decreases its availability to generate additional property-tax revenue and employment; it also reduces the appraised value and limits the use of surrounding land because of the radiological effects of spent fuel, security requirements, and visual impact. The commenter also stated that the NRC offers no guidance or regulation regarding land requirements pertaining to the safe storage of spent fuel. Without a specific rule or regulation, the commenter believes that it is not possible to generically determine land-use impacts.

The commenter noted that costs of managing spent fuel at a nuclear reactor site or a decommissioned reactor are generally reimbursable by the DOE, but costs that are not reimbursable must be paid from another source such as a limited decommissioning trust fund or the ratepayers of a regulated utility. The commenter asserted that DOE has not made any determination regarding a generic level of property taxes that will be reimbursable for short-term, long-term, or indefinite storage. Without this determination, the commenter believes it is not possible to evaluate economic value of the use of a generic site for spent fuel storage relative to the value of alternative uses and thus believes it is not possible to determine that socioeconomic impacts would be small.

The commenter uses the Maine Yankee and Vermont Yankee sites as examples. Both sites have existing infrastructure (e.g., rail lines, barge slips, switchyards, transmission lines, and municipal and sewer systems) that currently are unavailable for productive economic use.

The commenter goes on to assert the NRC does not regulate the amount of land needed to store and secure spent fuel, and has made no meaningful effort to calculate the lost value of the land needed to store and secure spent fuel, or value of land that will be left fallow to buffer an ISFSI. Neither the NRC nor DOE have established a standard property-tax assessment for spent fuel or the surrounding land. Without clear regulatory guidance regarding the required size of an ISFSI and reimbursable property tax, it is simply not possible to make a generic or specific determination regarding the land-use and socioeconomic impacts of the more than 100 nuclear plants in the United States. Because the NRC does not require movement of spent fuel from wet to dry storage, it is not possible to make a generic assessment of impact of dispersed onsite storage of spent fuel by focusing primarily on dry storage. Absent these essential determinations, the Waste Confidence Rule is built upon a false premise, and should be rejected.

Another commenter stated that it is disingenuous to consider spent fuel as similar to any other industrial land uses because nuclear waste lasts forever, and the stigma associated with continued storage will “psychologically limit” future uses of any site. The commenter stated that the land must be considered a “sacrifice zone” from the start with no pretense that it will ever be reclaimed for general use.

Two commenters raised concerns about the aesthetics associated with “fuel mausoleums” that many see as inherently grotesque or problematic and the conversion of valuable sites into a wasteland. One commenter suggested that the best type of onsite storage has three characteristics: a low visual signature, berms, the best casks (e.g., triple-top German model) that are built to withstand seismic events.

RESPONSE: NRC partly agrees and partly disagrees with the comments that state that continued spent fuel storage at decommissioned reactor sites would inhibit alternate economic development of the land. The economic impacts of reactor shutdown and decommissioning are described in the Decommissioning GEIS (NRC 2002a) and summarized in the License Renewal GEIS (NRC 2013m). The economic impact of reactor shutdown and decommissioning is also discussed along with other cumulative impacts in Chapter 6 of the draft GEIS. As discussed in Section 3.2 of the GEIS, continued storage of spent fuel at decommissioned reactors would require fewer workers and a small amount of land. Storage of spent fuel would only require 20 to 85 workers. Property-tax payments would continue to provide revenue as long as spent fuel is stored onsite. As described in Section 6.4 of the GEIS, impacts from the loss or reduction of tax revenue because of the termination of reactor operations and power plant shutdown on community services could range from SMALL to LARGE. Urban and semi-urban communities with a large or growing tax base near publicly owned and property-tax-exempt nuclear power

plants, or fully depreciated power plants, would not likely experience many changes in overall socioeconomic conditions. The shutdown and decommissioning of a nuclear power plant in rural areas could create a greater socioeconomic effect.

One comment noted that the DOE is responsible for reimbursing the costs of continued storage at nuclear power plant sites. The NRC believes that this comment is referencing a series of recent cases where utilities have successfully sued the DOE for costs related to the ongoing storage of spent fuel. See, e.g., *So. Nuclear Operating Co. v. United States*; *Maine Yankee Atomic Power Co. v. United States.* In at least one of these cases, DOE reimbursed a utility for property taxes incurred due to construction of a dry storage facility (*Consolidated Edison Co. of N.Y. v. United States*). The determinations by DOE as to which costs are reimbursable are beyond the scope of this GEIS and Rule; however, the NRC does not believe that a generic analysis of land-use impacts is dependent on knowing the identity of the party ultimately responsible for payment of property taxes incurred due to continued storage.

Land used for the ISFSI will not be available for redevelopment as long as spent fuel remains in storage. However, once power plant decommissioning activities are completed, the licensee may amend its Part 50 or Part 52 general license to reduce the amount of land covered by the license to only include the land used for the ISFSI. It is the licensee's responsibility to operate the ISFSI in accordance with NRC regulations, including NRC-approved and monitored programs for security, emergency planning, radiological monitoring, and quality assurance.

With the exception of the ISFSI, land within the decommissioned power plant site could be released for unrestricted use and would be available for redevelopment. For example, after decommissioning, the Maine Yankee Part 50 general license was amended in 2005 to cover only the approximately 3.2-ha (8-ac) Maine Yankee ISFSI site. During the decommissioning of Maine Yankee (on Bailey Point in Wiscasset, Maine), 174 ha (430 ac) of the power plant site was sold to a developer and is now undergoing economic redevelopment. Another 81 ha (200 ac) of the power plant site was donated to the Chewonki Foundation for conservation, public access, and environmental education as part of a Federal Energy Regulatory Commission settlement agreement.

In addition, a nuclear plant site would likely remain in industrial use after reactor shutdown and decommissioning. Most of the site infrastructure would remain (including electrical transfer stations, cooling towers, intake and discharge structures, and other improvements). As noted in the comment, the Maine Yankee and Vermont Yankee sites still have existing infrastructure (e.g., rail lines, barge slips, switchyards, transmission lines, and municipal water and sewer systems). Given the capital investment in infrastructure, a power plant owner or operator may want to continue to generate and sell electricity by constructing or installing another type of power generating facility at the site (e.g., coal, gas, wind, and solar). The utility also has a trained workforce and holds a number of Federal, State, and local permits. The nuclear power plant site will likely remain an industrial site for many years following the termination of reactor

operations, either as the site of a decommissioned nuclear plant, or as a decommissioned nuclear plant together with an operating non-nuclear power generating facility.

Given the likelihood that the nuclear plant site would remain an industrial site for many years, surrounding land use and property values would not likely be affected by the continued storage of spent fuel. Any attempt to estimate when the site would convert from industrial to some other land use and the impacts on offsite land and property values as a result of such conversion would be both remote (in time) and speculative.

Regarding the commenter's concerns about the visual impact of continued spent fuel storage, individual storage casks generally have a low profile (maximum height of approximately 6 m [20 ft]) (see Section 2.1.2.2 of the GEIS). As described in Sections 4.14.2 and 4.14.3 of the GEIS, construction and operation of a DTS during long-term and indefinite storage would have a limited visual impact. A DTS (about 14 m [47 ft] tall) is likely to have a larger visual profile than other ISFSI structures; however, it would not be expected to provide a significant visual contrast to the surrounding landscape. In addition, the ISFSI facility and concrete pads for the storage casks would take up a small amount of land area in comparison to the total site area of the nuclear power plant (see Table 3-1 of the GEIS). Although not required, berms have been constructed around some ISFSIs. For example, a 5.2-m (17-ft) tall earthen berm surrounds the Prairie Island ISFSI (NRC 2013o). The berm was designed for radiation shielding but also limits the visual profile of the ISFSI. Therefore, given the industrial appearance of decommissioned nuclear reactor sites, continued spent fuel storage would not have a noticeable aesthetic impact. No changes were made to the GEIS or Rule as a result of these comments.

(112-28-4) (146-3) (146-4) (146-5) (146-6) (146-7) (410-21) (431-9) (540-5)

D.2.21.2 – COMMENT: A commenter expressed concern about potential land-use impacts should a spent fuel pool fire occur. In particular, the commenter stated that the GEIS should analyze the potential consequences of a spent fuel pool fire and the resulting land contamination and costs associated with evacuation of the surrounding population and abandonment of land.

RESPONSE: The NRC disagrees with the comments. The impacts and consequences of a spent fuel pool fire are provided in Appendix F of the GEIS. As noted in Section F.1 of the GEIS, the NRC's current judgment concerning the impacts from a spent fuel fire during the short-term storage timeframe is derived from NUREG–1738, "Technical Study of Spent Nuclear Fuel Pool Accident Risk at Decommissioning Nuclear Power Plants" (NRC 2001b). In Section F.1.1 of the GEIS, the potential consequences of a spent fuel pool fire and the resulting land contamination and cost associated with evacuation of the surrounding population and abandonment of land were analyzed in terms of the economic consequences arising from the actions taken to avoid human exposure. The economic consequences take into account various costs, including offsite and onsite property damage resulting from the release of

radioactive material and the resulting land contamination. Offsite property damage would include evacuation costs, relocation costs for displaced persons, property decontamination costs, and loss of use of contaminated property through interdiction, crop, and milk losses. Onsite property damage costs include onsite cleanup and decontamination, repair of the spent fuel pool, and removal of fuel. The NRC estimated the total onsite and offsite economic damage values to be between $55.7 and $57.8 billion per event (NRC 1989a, 1997a), when adjusted to 2010 dollars (see Table F-1 in the GEIS). As discussed in Section F.1.1 of the GEIS, the economic impacts of a spent fuel pool fire would vary for different facilities. For example, high relocation costs would result from higher total population or population density and land use (e.g., whether land is used as farmland or not) would impact decontamination and condemnation costs. No changes were made to the GEIS or Rule as a result of these comments.

(693-3-16) (693-3-17)

D.2.21.3 – COMMENT: A commenter stated that, if context is not provided, the discussion of land-use requirements for dry cask storage is significantly misleading. The commenter suggested that it is the permanent, dangerous nature of spent fuel that must be addressed, regardless of the small acreage needed for dry casks.

RESPONSE: The NRC disagrees with the comment that the discussion of land-use requirements for dry cask storage is misleading. Section 3.1 of the GEIS accurately describes the affected environment with respect to land use associated with continued storage. Table 3-1 of the GEIS provides comparisons of land area needed for ISFSIs at various nuclear power plants in contrast to the total land area of power plant sites. The information in Table 3-1 indicates that land-use requirements for at-reactor ISFSIs are small in comparison to the total power plant site area. As presented, this information does not imply that, because land requirements for at-reactor ISFSIs are small, the environmental impacts of continued storage are likewise small.

The NRC recognizes that, regardless of the amount of land required for continued storage, spent fuel from reactors is highly radioactive and potentially harmful. Nonetheless, as stated in Section 4.17.1 of the GEIS, at-reactor storage will continue in the same manner as during the licensed life for operation of a reactor, and because continued storage represents but a fraction of operational activities at a reactor, public and occupational doses would continue to be within regulatory limits. Likewise, the discussion in Section 5.17.1 of the GEIS shows that public and occupational doses at away-from-reactor storage facilities also would be within regulatory limits. No changes were made to the GEIS or Rule as a result of this comment.

(919-5-1)

D.2.21.4 – COMMENT: A commenter expressed concern that Section 4.1 does not consider radiological impacts. The commenter believes that the land-use section should consider radiological impacts, not just the physical use of the land because radiological contamination could preclude other future uses of the land.

RESPONSE: The NRC disagrees with the comment. The purpose of the land-use section is to describe potential impacts on land-use from activities associated with routine activities associated with continued storage. It is not the purpose of the land-use analysis to address the radiological impacts of continued storage. Radiological impacts are addressed in Sections 4.17, 4.18, 4.19, 5.17, 5.18, 5.19, and Appendix E and F of the GEIS.

The NRC recognizes that radiological contamination from an accidental release could impair, limit, or preclude the use of the land for other purposes. Potential radiological contamination of the land from continued storage most likely would occur from accidents that result in the release of radioactivity to the surrounding environment. However, the likelihood of such an event is extremely small for both spent fuel pools and dry cask storage systems. As stated in the GEIS, the probability-weighted impacts from a severe accident involving spent fuel pools and dry cask storage systems would be SMALL. No changes were made to the GEIS or Rule as a result of this comment.

(919-6-10)

D.2.21.5 – COMMENT: Two commenters expressed concern regarding the conclusion in the GEIS and Rule that land-use and socioeconomic impacts of continued storage would be SMALL. In particular, the commenters asserted that no reasonable basis was provided for these conclusions; therefore, the Rule should be rejected.

RESPONSE: The NRC disagrees with the comments that there is no reasonable basis provided for the conclusions in the GEIS that land-use and socioeconomic impacts of continued storage would be SMALL. The bases for the conclusions that land-use and socioeconomic impacts from continued storage would be SMALL are summarized in Sections ES.13.1.1 and ES.13.1.2 and detailed in Sections 4.1 and 4.2 of the GEIS for continued storage at at-reactor sites and in Sections 5.1 and 5.2 of the GEIS for continued storage at away-from-reactor sites. In assessing land-use impacts, the NRC evaluated attributes such as land requirements for constructing and operating continued storage facilities, operational and maintenance activities that would change land use, and mitigation measures that would reduce land-use impacts. In assessing socioeconomic impacts, the NRC evaluated factors such as size of the workforce needed to construct and operate continued storage facilities, tax payments, and the demand for housing and public services. Based on an assessment of these factors, NRC concluded that the potential environmental impacts on land-use and socioeconomic conditions from continued storage for all the timeframes considered would be SMALL. No changes were made to the GEIS or Rule as a result of these comments.

(146-1) (354-3)

D.2.21.6 – COMMENT: A commenter stated that the GEIS should provide the rationale behind siting nuclear power plants and cited concerns about other land uses (e.g., leasing land). The commenter referenced the discussion in Section 3.1 of the GEIS, and stated that the reason for siting nuclear power plants in undeveloped, sparsely populated areas near water sources is to create a buffer zone, so densely concentrated populations are not exposed to routine and off-normal (e.g., accidental) radioactive releases. In addition, the commenter expressed concern over power plant owners leasing land for other uses (e.g., agricultural, forestry, cemetery and historical site access, and recreation) and questioned if these activities pose any security or radiological risks. The commenter also expressed concern about radioactive contamination in food, drinking water, and fish from nuclear power plants.

RESPONSE: The NRC disagrees with the comments. As stated in Chapter 3 of the GEIS, the affected environment is the environment that exists at and around facilities that store spent fuel after the reactor ceases operations. The NRC requires that nuclear power plants be both safe and secure. Safety refers to operating the plant in a manner that protects the public and the environment. The selection of nuclear power plant sites is made by private business interests along with State, local, and public utility officials. The NRC does not participate in site-selection decisions. The impacts of such decisions are outside the scope of the Rule and GEIS.

As explained in the GEIS, spent fuel is currently being stored in spent fuel pools and, in many cases, ISFSIs at all commercial nuclear power plants. Until a repository becomes available, spent fuel would be stored at existing nuclear power plant sites after reactor shutdown and decommissioning. The continued storage of spent fuel would not result in operational or maintenance activities that would change land-use conditions beyond those currently being experienced.

All NRC licensees are required to assess the impact from facility operations on the environment in their radiological environmental monitoring programs (REMPs). Samples are collected from aquatic pathways (e.g., fish, surface water, and sediment) and terrestrial pathways (e.g., soils, airborne particulates, radioiodine, milk, food products, crops, and direct radiation). Once reactor operations cease, the REMP would be modified to consider only the potential sources of radiation and radioactivity that might be released from a spent fuel pool or at-reactor ISFSIs. As discussed in Section 3.3 of the GEIS, REMP reports indicate contaminant concentrations around nuclear power plants are usually quite low (i.e., at or near the threshold of detection) and are seldom above background levels. In addition, operating nuclear power plants are required to implement security measures for the protection of stored spent fuel and high-level radioactive waste and to have comprehensive REMPs to assess the impact of reactor and storage operations on the environment. NRC regulations at 10 CFR 73.51 establish security requirements for the protection of stored spent fuel and high-level radioactive waste at nuclear power plants. The NRC does not believe that these additional activities pose any additional

security risks for nuclear power plants. No changes were made to the GEIS or Rule as a result of these comments.

(919-4-18) (919-4-19)

D.2.21.7 – COMMENT: A commenter stated that future land use cannot be assessed generically and does not agree with the NRC's assumption that land used for a future ISFSI pad and DTS would be reclaimed after the facilities are demolished and used again in the next 100-year replacement cycle. The commenter also asserted that the NRC does not have special expertise.

RESPONSE: The NRC disagrees with the comment. In developing the land-use impacts of continued at-reactor storage in a spent fuel pool or ISFSI (Section 4.1 of the GEIS) and continued storage at an away-from-reactor ISFSI (Section 5.1 of the GEIS), the NRC compiled and evaluated information and data from published EISs, site-specific monitoring data, and publicly available literature to make an impact determination.

As discussed in Section 1.8.3 of the GEIS, the NRC concludes that the land used for the ISFSI pads and DTS could be reclaimed after the facilities are demolished and, therefore, could be used again in the next 100-year replacement cycle. This conclusion is reasonable because land has already been disturbed and the environmental review for the original ISFSI and DTS would have already determined that the land was suitable for ISFSI and DTS design and construction. The comment disagrees with this assumption, but provides no contrary basis for eliminating the reuse of the land in the next 100-year replacement cycle. Further, the NRC disagrees with the comment's assertion that the NRC does not have special expertise. To complete the GEIS, the NRC employed a highly qualified team of scientists and engineers with requisite expertise in the affected resource areas, including land use. No changes were made to the GEIS or Rule as a result of this comment.

(867-2-11)

D.2.21.8 – COMMENT: Three commenters expressed support for the land-use conclusions presented in the draft GEIS. One commenter stated that the NRC appropriately relied upon a precedent set by prior EAs to conclude that operation of an at-reactor ISFSI would require no new or additional maintenance activities that would affect current land use. The commenter also provided excerpts from the Trojan ISFSI EA, which resulted in a FONSI. Two commenters stated that they agreed with the conclusions in Section 4.1 of the GEIS that land-use impacts would be SMALL because continued storage would only affect a small fraction of land committed for a nuclear power plant.

RESPONSE: The NRC acknowledges the supportive comments and the information relating to land-use impact determinations from a prior ISFSI EA. No changes were made to the GEIS or Rule as a result of these comments.

(694-3-3) (697-2-12) (697-4-3) (827-7-25)

D.2.21.9 – COMMENT: A commenter stated that continued storage sites should not be located in close proximity to facilities that process radioactive materials (e.g., location of NewGreen Legacy Services, LLP near Perry Nuclear Power Plant). The commenter is concerned that colocating continued storage facilities with facilities that process radioactive materials could mask or interfere with the continued storage facility's radiological environmental monitoring program.

RESPONSE: The NRC disagrees with the comment. Licensees of spent fuel storage facilities are required to measure radiological effluent from facilities and to maintain environmental monitoring programs to provide data on measurable levels of radiation and radioactive materials in the environment. These programs are designed to ensure that licensees control, monitor, and perform radiological evaluations of all releases and document and report all radiological effluents discharged into the environment. The programs are designed to ensure that the radiation or radioactive material measured can be attributed to the licensed activities for which monitoring is conducted. No changes were made to the GEIS or Rule as a result of this comment.

(819-21)

D.2.22 Comments Concerning Socioeconomics

D.2.22.1 – COMMENT: One commenter noted that the GEIS did not appear to evaluate the increases in population since reactors were originally licensed, which could affect emergency response and evacuation.

RESPONSE: The NRC disagrees with the comment. While populations have changed since reactors were originally licensed, the purpose of the socioeconomic impacts section is to describe the potential socioeconomic impacts caused by continued storage operations. To the extent that the comment was focused on emergency planning for reactor events, such events are outside the scope of the GEIS and Rule, which concerns the evaluation of the environmental impacts of the continued storage of spent fuel, not reactor operations. In addition, the likelihood of an accident requiring an evacuation is extremely small for both spent fuel pools and dry cask storage systems. As stated in Section 4.18.2.3 of the GEIS, the NRC has examined the risk of severe accidents in spent fuel pools and dry cask storage systems in several studies over the years. Based on these assessments, the NRC concludes that the risk

of severe accidents in spent fuel pools and dry cask storage systems is SMALL. No changes were made to the GEIS or Rule as a result of this comment.

(693-3-19)

D.2.22.2 – COMMENT: A commenter asserted that long-term or permanent storage at reactor sites represents a new use of land that should be subject to tax reassessment and a premium tariff levied by the State. The commenter cited Indian Point Nuclear Generating Plant as an example of a facility that has been paying a reduced property-tax rate for years. The commenter also cited the Price-Anderson Act and expressed concern that there are not enough funds to cover the costs of continued storage. Further, the commenter stated that NRC has not established guarantees for ongoing funding to protect nuclear waste now and into the future.

RESPONSE: The NRC disagrees with the comment that continued storage represents a new use of land. Nuclear power plant sites are industrial sites, and storage of spent fuel will occur during the licensed life for operations of the plant; thus, no change in land use will occur during continued storage. If anything, the area of land used by the facility will decrease during continued storage because the licensee will decommission most of the site during the short-term timeframe, with the last fuel being transferred from the pool sometime before the end of the short-term timeframe. In addition, any future construction activities (e.g., ISFSI and DTS replacement) during the long-term and indefinite timeframes would most likely occur on land previously used for industrial purposes.

Licensees of nuclear power plants pay taxes to local and State governments. After termination of reactor operations, property-tax payments would continue to provide revenue to State and local governments, albeit at a reduced rate. As long as a licensee continues to store spent fuel on land it owns, the licensee will have to pay some form of property taxes and associated fees to local and State governments. Also, the NRC has no role in the decisions of State and local tax and utility officials in determining what is taxed, how taxes are collected, and how tax revenue is allocated. In addition, potential replacement of the at-reactor ISFSI and construction, operation, and subsequent replacement of the DTS during the long-term and indefinite storage timeframes could be viewed as property improvements by local tax assessors, which could cause property-tax payments to increase.

The Price-Anderson Nuclear Industries Indemnity Act (Price-Anderson Act; 42 USC 2210), which became law in 1957, was designed to ensure that adequate funds would be available to satisfy liability claims of members of the public for personal injury and property damage in the event of a nuclear accident. The Price-Anderson Act is not the source of funds to pay for continued storage of spent fuel as implied by the comment.

The costs of continued storage are discussed in Sections D.2.42.2 and D.2.42.3 of this appendix. NRC regulations contain provisions to determine and remain current on the financial qualifications of its reactor licensees in 10 CFR 50.33(f) and to reevaluate these qualifications

within 2 years following permanent cessation of operations of the reactor or 5 years before expiration of the reactor license under 10 CFR 50.54(bb). Paragraph 50.54(bb) requires licensees to submit written notification to the Commission for its review and approval of the program by which the licensee intends to manage and provide funding for the management of all irradiated fuel at the reactor following permanent cessation of operation of the reactor until title to the irradiated fuel and possession of the fuel is transferred to the Secretary of Energy. Therefore, the financial plan and financial burden of continuing spent fuel storage is analyzed within the NRC's regulatory framework. However, the NRC acknowledges that, because of delays in the siting and licensing of a repository, the Federal government bears an increasing financial responsibility for spent fuel storage costs, and it may become responsible for paying all costs associated with spent fuel storage at some time in the future. No changes were made to the GEIS or Rule as a result of this comment.

(611-48)

D.2.22.3 – COMMENT: Commenters stated that the GEIS underestimated the impacts of continued storage on future land uses and local economic development. In particular, one commenter stated that the NRC's socioeconomic analysis placed undue attention on the "benefits" derived from hosting an ISFSI, and asked why the negative economic consequences of continued storage are not considered. For example, communities such as Red Wing, Minnesota find themselves in the untenable position of having to host spent fuel for an indefinite period of time, which could affect Red Wing's economy and potential development. The perceived negative effect of continued storage could impact Red Wing's ability to attract new businesses and maintain existing businesses. The commenter asserted that the Blue Ribbon Commission recognized the chilling effect of continued spent fuel storage on communities such as Red Wing.

The commenter stated that the description and analysis of land-use and socioeconomic impacts presented in the Executive Summary and Chapters 3, 4, 6, and 8 of the GEIS is too narrow, and the analysis does not weigh the effect that continued storage has on public safety services nor its negative chilling impact on development and economic growth in the surrounding area. As an example, the commenter noted that continued spent fuel storage at the Prairie Island Nuclear Generating Plant would negatively impact commercial activity and potential development in Red Wing, Minnesota in both the short-term and long-term timeframes. Specifically, the commenter stated that land-use and socioeconomic impacts in Section 4.20 and Section 8.1 of the GEIS should be modified from SMALL or MODERATE to LARGE and these tables should also indicate that the impact is site-specific.

In addition, the commenter asserted that an appropriate analysis should not be limited to direct impacts (e.g., the number of workers at the storage facility), but should include indirect impacts as well (e.g., the chilling effect on land development in the area which in turn would impact employment and income, taxes, demography, and housing). Further, the commenter stated that continued storage would not provide sufficient taxes needed to support public safety services.

The commenter also believed that cumulative land-use impacts, presented in Section 6.4.1.3 of the GEIS, should be amended from SMALL or MODERATE to LARGE and that the productivity analysis in Section 8.4 of the GEIS be expanded to include an evaluation of the long-term impact of indefinite storage on economic productivity. The commenter stated that there is an indirect impact or chilling effect that continued storage will have on the natural development of the area surrounding the storage facility. The commenter noted that costs associated with maintaining emergency preparedness were not considered in the Section 8.4 analysis, and urged that these costs be factored into the cost-benefit analysis in Chapter 7 of the GEIS.

Another commenter questioned the SMALL land-use impact conclusion for the indefinite storage timeframe citing safety, security, health, and environmental risks of storing spent fuel which would preclude other uses of the land that is “hosting” the ISFSI. The commenter believed that a perceived “radioactive stigma” could prove significant and the commenter cited the lack of development at the decommissioned Big Rock Point site as an example. The commenter noted that residents attending the Kewanee Power Station End of Cycle Meeting in June 2013, expressed concern about spent fuel remaining onsite and could not foresee any alternative use of land, much less an economic benefit for the area. Overall, the commenter stated that NRC’s examination of economic benefits is not sufficient given the shallow analysis of the risks associated with generating spent fuel, storage, and disposal in the GEIS.

RESPONSE: The NRC disagrees that the GEIS underestimates the impacts of continued storage on future land-use and economic development. The NRC used currently available information to predict the impacts of continued storage on economic development from site-specific and generic environmental reviews (e.g., EAs for ISFSIs and EISs for the renewal of existing and new reactors). The comments refer to the socioeconomic analysis presented in the Chapters 3, 4, 6, and 8 of the GEIS. The affected environment discussion in Chapter 3 is not a description of the economic benefits of spent fuel storage; rather, it is a general description of the dynamic socioeconomic system that supports and is supported by storage facility operations. The communities supply the people, goods, and services required to operate and maintain storage facilities. Storage operations, in turn, supply wages and benefits for people and dollar expenditures for goods and services. The measure of a community’s ability to support storage operations depends on its ability to respond to changing environmental, social, economic, and demographic conditions. This discussion also identifies the socioeconomic factors that have the potential to be directly or indirectly affected by changes in storage operations over time at a storage facility.

Another comment expressed the belief that the storage of nuclear material at an existing nuclear power plant would have a chilling effect or stigma on future development of the area. In *Metropolitan Edison Co. v. People Against Nuclear Energy*, the Supreme Court concluded there must be a “reasonably close causal relationship between a change in the physical environment and the effect at issue.” Id. at 774. The element of perceived risk, in this case the chilling effect

or stigma of continued storage, lengthens the “causal chain” such that the connection between continued storage and diminished future economic development is tenuous. Therefore, the NRC concludes that perception-based chilling effects and stigma-related impacts are uncertain or speculative and do not need to be considered in this GEIS.

As explained in the GEIS, spent fuel is currently being stored in spent fuel pools and ISFSIs (where available) at all commercial nuclear power plants in the United States. Until a geologic repository becomes available, spent fuel would continue to be stored at existing nuclear power plant sites after reactor shutdown and decommissioning. The continued storage of spent fuel would not create any new effect on property values beyond what has already been experienced. With regard to socioeconomic impacts, the proposed action would not require any additional employees to maintain or monitor an existing ISFSI. With no new employment expected and no additional burden on the community to provide housing and public services, an increase to the tax base is not anticipated. Based on this information, no change (direct or indirect) to the local economy would result from the continued storage of spent fuel and socioeconomic impacts would be SMALL. In addition, it is the licensee’s responsibility to operate the ISFSI in accordance with NRC regulations including NRC approved and monitored programs for security, emergency planning, radiological monitoring, and quality assurance.

Continued storage of spent fuel at a reactor site after reactor shutdown and decommissioning would not create any new effect on offsite land use beyond what is currently being experienced. Because land-use conditions would not change at an existing reactor site, the NRC concluded that the impacts from the proposed action on land use would not be significant. The NRC agrees that the land used for the at-reactor ISFSI will not be available for redevelopment as long as spent fuel remains in storage. However, once power plant decommissioning activities are completed, the licensee may amend its Part 50 or Part 52 license to reduce the amount of land covered by the license to only include the land used for the ISFSI. With the exception of the ISFSI, land within the decommissioned power plant site could be released for unrestricted use and would be available for redevelopment. For example, during decommissioning the NRC-approved Maine Yankee Atomic Power Company’s request to amend its Part 50 license to only include the land used for the ISFSI and the licensee sold a large parcel of land to a developer for economic redevelopment. In addition, a smaller parcel of land was donated for conservation, public access, and environmental education as part of a Federal Energy Regulatory Commission settlement agreement.

As described in Section 6.4 of the GEIS, the magnitude of cumulative land-use impacts resulting from general trends near a storage facility would depend on current land-use patterns and proposed land-use changes, the number and density of actions, and the extent to which these actions (e.g., facilities or projects) employ mitigation measures to reduce impacts. Based on its assessment of general trends and activities near at-reactor and away-from-reactor storage facilities and the likely future trends of these activities using projections prepared by Federal,

State, and local agencies, the NRC concluded that cumulative impacts could range from minimal (e.g., minor changes from limited development in the area, [NRC 2011d (NRC 2011c)]) to noticeable (e.g., construction and operation of a new coal-fired power plant, new transmission lines, and climate change in the area [NRC 2011a]) (NRC 2011d).

The NRC believes it has adequately and appropriately assessed the impacts of continued storage on future land uses and economic development, including cumulative impacts, and that the comment does not provide an adequate basis for amending the land-use and socioeconomic impact conclusions in Chapters 4, 6, and 8 of the GEIS from SMALL or MODERATE to LARGE. In assessing the cumulative impacts on future land-use and economic development, the NRC also evaluated the incremental effects of land-use activities occurring near at-reactor and away-from-reactor storage facilities and the future trends of these activities using projections prepared by Federal, State, and local agencies (see Table 6-1 of the GEIS). No changes were made to the GEIS or Rule as a result of these comments.

(783-1-10) (783-3-11) (783-3-12) (783-1-16) (783-3-17) (783-2-18) (783-3-18) (783-2-19) (783-3-2) (783-2-20) (783-3-24) (783-3-3) (919-6-11) (919-5-4) (919-5-5) (919-5-6)

D.2.22.4 – COMMENT: Several commenters argued that the NRC should have included an analysis of the environmental impact of continued storage on property values as part of the analysis of land use in the GEIS. One commenter stated that the GEIS did not consider the socioeconomic impacts of continued storage on property values and business development. The commenter also noted that declines in property values affect tax revenues. Another commenter stated that spent fuel pool leaks and the associated cleanup may also affect property values, especially if a utility is financially unable to clean up leaks from spent fuel pools 60 years into the future. Another commenter contended that without an analysis of the impacts of continued storage on property values, the analysis in the GEIS cannot support a conclusion that the environmental impacts for land use are SMALL.

RESPONSE: The NRC disagrees with the comments. Any impact to property values would have occurred prior to or during the construction of the nuclear power plant and would be factored into existing property values when the continued storage period begins. As explained in the GEIS, spent fuel is currently being stored in spent fuel pools and ISFSIs (if available) at all commercial nuclear power plants in the United States. Although the NRC continues to believe that spent fuel can and will, in due course, be removed to a repository, the GEIS describes the impacts of continued storage. Until a repository becomes available, spent fuel would continue to be stored at existing nuclear power plant sites after reactor shutdown and decommissioning and potentially at away-from-reactor ISFSIs. The continued storage of spent fuel would not create any new effect on property values in the vicinity of existing nuclear power plants beyond what has already been experienced.

A power plant site will remain in industrial use for many years following the termination of reactor operations and decommissioning while continuing to store spent fuel. However, given the substantial investment in power plant infrastructure and the continued demand for electricity, a power plant owner or operator may opt to continue generating electricity at the site after the termination of reactor operations with a non-nuclear power plant.

With respect to a licensee's financial stability, NRC regulations contain provisions to determine and remain current on the financial qualifications of its reactor licensees in 10 CFR 50.33(f) or 10 CFR 52.77 and to reevaluate these qualifications within 2 years following permanent cessation of operations of the reactor or 5 years before expiration of the reactor license under 10 CFR 50.54(bb). Any significant radioactivity identified by licensees, including that resulting from a spent fuel pool leak, must be addressed during the decommissioning process to meet the license-termination requirements of 10 CFR Part 20, Subpart E. The NRC has determined that reasonable assurance of decommissioning funding is necessary to ensure the adequate protection of public health and safety. Decommissioning funding is an obligation that is taken on by a licensee when an NRC license is issued. Under 10 CFR 50.75(b), a reactor licensee is required to provide decommissioning funding assurance by one or more of the methods described in 10 CFR 50.75(e) as determined to be acceptable to the NRC. In addition, the NRC has a comprehensive, regulation-based decommissioning funding oversight program in place to provide reasonable assurance that sufficient funds will be available for decommissioning and radiological decontamination for each U.S. commercial nuclear facility to meet NRC standards and regulations. However, given that a power plant site would remain an industrial site for many years, any impacts on property values as a result of industrial activity, including leaks and spills, would be negligible compared to the impacts that occurred when the power plant was constructed and commenced operation. No changes were made to the GEIS or Rule as a result of these comments.

(473-16-3) (473-16-4) (693-3-18) (897-5-14)

D.2.22.5 – COMMENT: Several commenters questioned whether tax payments for storage facilities would continue after plant operations cease. One commenter stated that no historic justification exists for the property owner (licensee) to continue tax payments into the long-term and indefinite storage timeframes. Rather, the commenter believes that the Federal government would purchase or take control of sites that store spent fuel to ensure continued safety. Other commenters asserted that the socioeconomics analysis in the GEIS did not account for the impact of reduced tax payments on local municipalities and their ability to maintain and provide necessary public safety services to respond to an incident at the facility during the continued storage period. Another commenter stated that the burden of a host community has and will continue to be shifted to other taxpayers through increased property taxes.

One commenter stated that the GEIS cumulative effects analysis should reference the negative impact associated with continued storage in the trends and activities section. In addition, the commenter expressed concern that there does not appear to be any reference to costs associated with emergency preparedness, a decrease in taxes, the inability to develop land around a spent fuel storage facility, and the cost to develop infrastructure and public services. The commenter believes that these issues need to be considered in the NRC's analysis.

RESPONSE: The NRC disagrees with the comments. As discussed in Section 3.2 of the GEIS, licensees of nuclear power plant sites pay taxes to State and local governments as well as other taxing jurisdictions. While the Federal government bears an increasing financial responsibility for spent fuel storage costs—as a result of delays in the siting and licensing of a repository—judgments or payments from the Federal government to licensees to defray storage costs do not change ownership of storage sites. As long as licensees own the land on which spent fuel is stored, they will continue to pay taxes. In addition, under 50.54(bb), the NRC requires licensees to submit written notification to the Commission for review and approval of the licensee's plan for spent fuel management plan following cessation of reactor operations. If the Federal government were, however, to take possession of a spent fuel storage facility to ensure public safety, it is possible that some form of tax compensation would continue.

The impacts of terminating reactor operations and the associated potential impacts of reduced tax payments and the ability to maintain and provide necessary public safety services until reactor decommissioning are outside the scope of this GEIS. These impacts would occur separately from the impacts of continued storage and are mentioned in the GEIS only as a point of comparison. Impacts of terminating reactor operations and the effects associated with the potential reduction in tax payments are discussed in greater detail in NUREG–1437, *Generic Environmental Impact Statement for License Renewal of Nuclear Plants* (NRC 2013m). The impacts from decommissioning nuclear plants are discussed in greater detail in NUREG–0586 "Generic Environmental Impact Statement for Decommissioning Nuclear Facilities: Supplement 1, Regarding the Decommissioning of Nuclear Power Reactors" (NRC 2002a). No changes were made to the GEIS or Rule as a result of these comments.

(93-3) (328-2-6) (783-3-13) (783-1-2) (783-2-21) (783-1-9)

D.2.22.6 – COMMENT: One commenter stated that the NRC does not have adequate support or justification for its decision to incorporate the findings from the 2001 PFS EIS (NRC 2001a) into the GEIS. The commenter asserted that the GEIS failed to consider the negative impacts of continued storage on local and State economies, including the potential loss of economic development projects in a community. The commenter questioned whether the owner of the property and spent fuel storage facility (e.g., Native American or Federal), would pay local and state property taxes. The commenter also asserted that the GEIS failed to consider potential local and State infrastructure impacts, which should be assessed in a site-specific review.

The commenter noted that the GEIS stated that the PFS EIS designated proposed payments made by PFS to the Skull Valley Band of Indians as a large benefit. In addition, the commenter asserted that the GEIS failed to discuss the consent agreements with PFS and why the PFS EIS found them to be beneficial.

In addition, the commenter stated that the GEIS failed to justify the assumption that away-from-reactor storage facilities would be sited in “sparse population” areas similar to PFSF. The commenter argued that the NRC should compare PFS demographics to GEH Morris or other proposed storage sites in the GEIS. The commenter also asserted that the NRC failed to consider the impact of continued storage on jurisdictions with limited local law enforcement and emergency facilities as was discussed in the proposed PFS EIS.

The commenter noted that the GEIS does not address transportation infrastructure or safety-related infrastructure impacts caused by heavy construction vehicles, heavy-haul trucks, and local impacts related to highway maintenance.

In addition, the commenter stated that away-from-reactor storage facilities may negatively impact regional and state economics, separate and apart from any environmental justice issues. The commenter believes that NRC should acknowledge in the GEIS that these impacts would be evaluated on a site-specific basis. Finally, the commenter stated that the GEIS cannot support a conclusion that the socioeconomic benefits at an unknown site are large because the host community has yet to negotiate the terms of any consent agreements.

RESPONSE: The NRC disagrees with the comments. The NRC did not incorporate findings from the PFS FEIS into the GEIS. The NRC used the PFSF characteristics (e.g., physical size and workforce) to evaluate the impacts of an away-from-reactor facility. However, the conclusions in the GEIS do not result from the incorporation of the PFS FEIS conclusions. For example, the PFS FEIS concluded that the impacts to terrestrial resources would be SMALL. However, because of the uncertainty associated with an unknown location, the NRC concluded that the impacts to terrestrial resources would be SMALL to MODERATE.

The GEIS and Rule do not authorize the storage of spent fuel at an away-from-reactor storage facility. Before authorizing the construction and operation of any future away-from-reactor ISFSI, the NRC would perform a site-specific NEPA review as required by 10 CFR 51.20(b)(9). As stated in the Commission's “Policy Statement on the Treatment of Environmental Justice Matters in NRC Regulatory and Licensing Actions,” (69 FR 52040) “EJ [environmental justice], as well as other socioeconomic issues, are considered in all site-specific EISs.” The NRC collects demographic and economic information on local communities potentially affected by proposed new nuclear facilities during the environmental review process. Socioeconomic impacts would be determined during the site-specific NEPA review process for that licensing action, including specific concerns attributable to the special conditions within a community. As stated in the Commission’s policy statement, should the NRC receive an application for a

proposed away-from-reactor ISFSI license, a site-specific NEPA assessment would be conducted, and this analysis would include the consideration of environmental justice, socioeconomics, and transportation impacts. Clarifying changes have been made to Sections 5.2 and 5.3 of the GEIS in response to these comments. No changes were made to the Rule as a result of these comments.

(579-13) (579-17) (579-6) (579-9)

D.2.22.7 – COMMENT: A commenter agreed with the NRC's estimated staffing needs in Sections 4.2 and 4.3 of the GEIS, provided the estimates include security personnel. However, the commenter questioned the rationale for the difference in the number of workers for dry storage versus wet storage, stating that it is not clear. The commenter believed the lower end of the range would be the same.

RESPONSE: The NRC disagrees with the commenter. The NRC is unaware of any particular reasons for the differences in staffing needs between wet and dry storage. However, the estimates are derived from data on multiple existing sites, and the NRC has no reason to believe that data presents an inaccurate picture of the staffing needs for those forms of storage. No changes were made to the GEIS or Rule as a result of this comment.

(827-7-17)

D.2.23 Comments Concerning Environmental Justice

D.2.23.1 – COMMENT: Several commenters expressed concern regarding the Environmental Justice Sections in the GEIS, citing the limits of a generic analysis. A commenter stated that Executive Order 12898 (59 FR 7629) mandates that Federal agencies identify and address potential disproportionately high and adverse impacts to minority and low-income populations because these populations have historically been disregarded in environmental decision-making. The commenter indicated that the GEIS should consider local and intergenerational environmental justice to ensure that future generations are not disproportionately affected. In addition, the commenter believes that the environmental justice analysis in the GEIS could potentially be flawed and incorrect. Another commenter would prefer a more detail-oriented environmental justice discussion in the GEIS and questioned how impacts could be forecasted for a potential future away-from-reactor ISFSI.

One commenter stated that the 2010 Waste Confidence draft GEIS needs to be revised and that it was unreasonable for the NRC to claim that a survey of human health and environmental effects on a "generic" minority and low-income community provides a level of analysis that satisfies NEPA. The commenter asserted that environmental justice is site-specific, and stated that an impact analysis in a GEIS is insufficient for NEPA purposes. Another commenter

argued that the environmental justice impact determinations in the tables in Chapter 8 of the GEIS are not supported by the analysis in Chapters 4 and 5 of the GEIS.

One commenter expressed concern that a member of the public could be precluded from raising an issue in a site-specific licensing action after impacts are determined for continued storage. The commenter further stated that the GEIS analysis is an attempt to foreclose any consideration of site-specific environmental justice issues (e.g., human health effects), especially those related to the long-term and indefinite timeframes (i.e., failure to secure a geologic repository).

RESPONSE: The NRC agrees with the comments in part and disagrees in part. The NRC agrees that Executive Order 12898 (59 FR 7629) directs Federal agencies to identify and address, as appropriate, disproportionately high and adverse human health or environmental effects of its programs, policies, and activities on minority and low-income populations. The environmental justice impact analysis performed for the GEIS was conducted in accordance with the Commission's "Policy Statement on the Treatment of Environmental Justice Matters in NRC Regulatory and Licensing Actions" (69 FR 52040), which states "The Commission is committed to the general goals set forth in EO 12898 (59 FR 7629), and strives to meet those goals as part of its NEPA review process." The GEIS considers the potential human health and environmental effects from continued storage of spent fuel on minority and low-income populations.

Per the Commission's policy statement, the NRC considers environmental justice issues in all licensing and regulatory actions primarily by conducting an environmental review and fulfilling its NEPA responsibilities for these actions. Environmental justice-related issues and demographic conditions (i.e., potentially affected minority and low-income populations) differ between sites and environmental justice issues and concerns usually cannot be resolved generically. Consequently, environmental justice impacts are normally considered in site-specific environmental reviews (69 FR 52040) for "underlying licensing actions for each particular facility." However, the NRC has determined that a generic analysis of the human health and environmental effects of continued storage on minority and low-income populations is possible.

As explained in the GEIS, spent fuel is currently being stored in spent fuel pools and ISFSIs (where available) at all commercial nuclear power plants in the United States. Until a geologic repository becomes available, spent fuel would continue to be stored at existing nuclear power plant sites after reactor shutdown and decommissioning. The continued storage of spent fuel would not create any new effect on minority and low-income populations beyond what is currently being experienced.

As discussed in Chapter 4 of the GEIS, the overall human health and environmental effects from the continued storage of spent fuel in existing spent fuel pools and ISFSIs would be limited in scope and SMALL for all populations. Therefore, minority and low-income populations are

not expected to experience disproportionately high and adverse human health and environmental effects from the continued storage of spent fuel. In addition, there would be no new, added, or increased human health or environmental effects from existing spent fuel storage beyond what is currently being experienced during reactor operations. As indicated in the Commission's policy statement, environmental justice impacts would also be considered during site-specific environmental reviews for specific licensing actions. Based on this information, the NRC disagrees with the commenter that the environmental justice analysis in the GEIS is incorrect. However, the NRC clarified the discussion in Section 4.3 of the GEIS as a result of these comments.

Another comment is incorrect in assuming a draft of the GEIS was issued in 2010. The environmental analysis supporting the 2010 Waste Confidence rulemaking was an EA. To the extent that the comment intended to reference the draft GEIS, those concerns are addressed in this response. In addition, the NRC does not agree with the comment that stated that site-specific environmental justice issues could not be raised once a determination is made in the GEIS that the environmental effects of continued storage are "SMALL." Members of the public will have the opportunity to raise environmental concerns regarding environmental impacts during the license term, including environmental justice, in site-specific NEPA reviews.

The NRC agrees with one comment regarding the environmental justice summary statements in Section 8.1 and Tables 8-1, 8-2, and 8-3 of the GEIS. The environmental justice summary statements in Tables ES-3, ES-4, ES-5, 4-2, 5-1, 6-4, 8-1, 8-2, and 8-3 of the GEIS have been revised for consistency with the environmental justice impact determinations presented in Chapter 4 of the GEIS to read, "[d]isproportionately high and adverse impacts are not expected." In addition, environmental justice summary discussions in the Executive Summary and Chapters 4, 5, 6, and 8 of the GEIS have been similarly revised. No changes were made to the Rule as a result of these comments.

(47-2) (47-3) (47-4) (244-15-4) (244-15-7) (354-4) (669-12) (898-5-7) (898-5-9)

D.2.23.2 – COMMENT: A commenter stated that while claiming compliance with Executive Order 12898, which would necessitate a site-specific environmental analysis, NRC clearly indicates that there is no licensing action planned as part of this GEIS.

RESPONSE: The NRC agrees with the commenter that there is no licensing action planned as part of this GEIS and rulemaking. The GEIS and Rule analyze and codify the environmental impacts of continued storage but do not license or authorize storage at any particular site or facility. The environmental justice analysis presented in this GEIS combined with the consideration of environmental justice during site-specific environmental reviews for specific licensing actions, as indicated in the Commission's policy statement, demonstrates the

Commission's compliance with Executive Order 12898 (59 FR 7629). No changes were made to the GEIS or Rule as a result of this comment.

(693-3-20)

D.2.23.3 – COMMENT: Several commenters expressed concern that spent fuel storage sites would be located in minority or low-income communities. One commenter stated that ISFSIs are de-facto nuclear waste dumps, and that the Rule is based on finding one or more waste sites located in economically stressed communities. The commenter stated that potential sites would be in the Southeast, at sites such as the Savannah River Site or on Native American land (e.g., Yucca Mountain). The commenter believes this is fundamentally unjust. Another commenter stated that centralized interim storage is an environmental injustice to any community residing near a proposed repository. One commenter stated that shipping waste from an area which benefitted from the electricity to a poorer region who received no benefit is an environmental justice violation.

RESPONSE: The NRC disagrees with the comments. As explained in the GEIS, spent fuel is currently being stored in spent fuel pools and ISFSIs (where available) at all commercial nuclear power plants in the United States. Although the NRC continues to believe that spent fuel can and will, in due course, be removed to a repository, the GEIS describes the impacts of continued storage. Until a repository becomes available, spent fuel would continue to be stored at existing nuclear power plant sites after reactor shutdown and decommissioning. The continued storage of spent fuel would not create any new effect on minority and low-income populations beyond what is currently being experienced.

In addition, the GEIS and Rule do not authorize the continued storage of spent fuel. Should the NRC receive an application for an away-from-reactor ISFSI or a geologic repository, a site-specific NEPA analysis would be conducted, which would include consideration of all environmental impacts including environmental justice. As stated in Chapter 5 of the GEIS, if the away-from-reactor ISFSI can be located in a remote area far enough away from any people, the storage of spent fuel would not likely have high and adverse impacts to minority and low-income populations. No changes were made to the GEIS or Rule as a result of these comments.

(222-2) (250-1-2) (377-6-1) (611-31)

D.2.23.4 – COMMENT: The commenter disagreed with the inclusion of a reference to potential MODERATE or LARGE historic and cultural resource impacts in Section 4.3.2 of the GEIS, which analyzes the environmental justice impacts of long-term storage. The commenter stated that this reference is inappropriate and unnecessary. While the commenter believed that the environmental justice determination was correct, the commenter stated that impacts to historic and cultural resources would likely be avoided at decommissioned reactor sites where future

construction could occur on previously disturbed lands. In addition, the commenter noted that historic and cultural resource impacts were not included in the discussion of away-from-reactor environmental justice impacts discussed in Chapter 5 of the GEIS.

RESPONSE: The NRC agrees in part and disagrees in part with the comment. As discussed in Section 3.3 of the GEIS, a disproportionately high and adverse environmental impact refers to an impact or risk of an impact on the natural or physical environment in a low-income or minority community that appreciably exceeds the environmental impact on the larger community. Such effects may include cultural impacts. In assessing cultural environmental impacts, impacts that uniquely affect minority or low-income populations or American Indian tribes are considered. Based on this information, the reference to historic and cultural resources is appropriate and necessary. No changes were made to the GEIS or Rule as a result of this comment.

The NRC agrees with the portion of the comment that states the away-from-reactor ISFSI can be sited to avoid significant historic and cultural resources. In most instances, placement of away-from-reactor storage facilities can be adjusted to minimize or avoid impacting historic and cultural resources, but NRC recognizes that this is not always possible. However, the NRC disagrees with the comment's assertion that reference to historic and cultural resource impacts in the away-from-reactor environmental justice discussion in Chapter 5 of the GEIS would be inappropriate and unnecessary. The environmental effects analysis in Section 5.3 has been revised to include an appropriate discussion of the possible impacts to historic and cultural resources at an away-from-reactor ISFSI. No other changes were made to the Rule as a result of this comment.

(827-4-5)

D.2.23.5 – COMMENT: A commenter suggested nuclear energy could provide a zero-emission energy source that would benefit minority and underserved communities. The commenter cited a column written by Luz Weinberg, the City Commissioner of Aventura, Florida and Vice-President of the National Association of Latino Elected and Appointed Officials. The column stated that minority communities including those with health conditions are best served by clean-air energy such as nuclear power.

RESPONSE: The NRC acknowledges the comments regarding the benefits of nuclear energy and clean air for minority and underserved and underprivileged communities. The comments are supportive of nuclear power and general in nature. No changes were made to the GEIS or Rule as a result of this comment.

(244-9-7)

D.2.23.6 – COMMENT: Several commenters stated that minority and low-income populations have historically been disproportionately affected by nuclear energy production. Two

commenters stated that the GEIS should consider who bears the burden and reaps the benefits of continued storage. Seven commenters stated that Native peoples, people of color, and those in poor communities have historically been disproportionately impacted by the uranium fuel cycle (mining to disposal) and will continue to be impacted into the future. Another commenter stated that there has been a history of environmental racism associated with uranium extraction around the world.

Another commenter objected to the statement that "socioeconomic conditions affected by continued storage of spent fuel as they relate to minority and low-income populations living near nuclear power plants would remain unchanged." The commenter believes that continued storage is a continued disproportionate impact on these populations who have "hosted" a nuclear power plant for 40 to 80 years. The commenter asserted that this represents a "nuclear sacrifice zone attitude" by the NRC and cited the Prairie Island Indian Community as an example. The commenter does not believe that "acceptable" or "permissible" releases from spent fuel storage at Prairie Island Nuclear Generating Plant comport with environmental justice principles, and stated that the Prairie Island Indian Community should not continue to be burdened with spent fuel.

RESPONSE: The NRC acknowledges that it is possible that minority and low-income populations could have historically been disproportionately affected by "nuclear energy production." As explained in the GEIS, spent fuel is currently being stored in spent fuel pools and ISFSIs (where available) at all commercial nuclear power plants in the United States. The continued storage of spent fuel would not create any new effect on minority and low-income populations beyond what is currently being experienced.

Executive Order 12898, "Federal Actions to Address Environmental Justice in Minority Populations and Low-Income Populations" (59 FR 7629), was issued in February 1994, well after all currently operating commercial nuclear power plants had been constructed, except Watts Bar Unit 1, which began operations in 1994. Therefore, minority and low-income populations could have been disproportionately affected by the construction and operation of a nuclear power plant prior to Executive Order 12898. However, the selection of a nuclear power plant site and the location of a uranium fuel cycle facility, including mining and disposal facilities, are made by private business interests along with State, local, and utility officials. The NRC does not participate in site-selection decisions. Rather, the NRC reviews the characteristics of the site selected to ensure that it satisfies any applicable regulatory requirements. The impacts of site-selection decisions are outside the scope of this GEIS. The NRC is responsible for addressing the environmental impacts from the continued storage of spent fuel in this GEIS.

The NRC considers environmental justice impacts during NEPA assessments for all regulatory and licensing actions per the Commission's "Policy Statement on the Treatment of Environmental Justice Matters in NRC Regulatory and Licensing Actions" (69 FR 52040). Potential human health and environmental effects on minority and low-income populations are

determined during the NEPA review process, including impacts unique to the special character of minority, low-income, and American Indian communities.

As explained in Chapter 4 of the GEIS, the overall human health and environmental effects from the continued storage of spent fuel in existing spent fuel pools and ISFSIs would be SMALL for all populations. Therefore, minority and low-income populations are not expected to experience disproportionately high and adverse human health and environmental effects from the continued storage of spent fuel. Based on this information, the NRC disagrees with the commenter that the continued storage is a continued disproportionate impact on populations who have "hosted" a nuclear power plant. No changes were made to the GEIS or Rule as a result of these comments.

(30-21-5) (143-7) (326-51-2) (327-22-4) (357-6) (507-5) (707-7) (919-6-15) (919-6-16) (919-6-17) (938-7)

D.2.23.7 – COMMENT: The commenter expressed disbelief that environmental justice impacts have been fully evaluated in the GEIS. The commenter stated that the rulemaking is not a licensing action, but asserted that the Rule allows for long-term and indefinite storage by virtue of conclusions presented in the GEIS. Referencing the ongoing license renewal review of the Prairie Island Nuclear Generating Plant ISFSI, the commenter questioned whether the storage term would be limited to 40 years, given the status of the geologic repository. The commenter asserts that the 40-year renewal is an arbitrary timeframe, based on nothing more than the hope that a repository becomes available. The commenter stated that the Prairie Island Indian Community will continue to be impacted by the Prairie Island Nuclear Generating Plant ISFSI long after the GEIS is finalized, and that generations of their descendants will have to keep fighting to remove spent fuel from the Tribe's homeland.

RESPONSE: The NRC agrees in part and disagrees in part with the comments. The GEIS and Rule do not authorize the continued storage of spent fuel. As discussed in Chapter 4 of the GEIS, the overall human health and environmental effects from continued storage would be SMALL for all populations. Therefore, minority and low-income populations are not expected to experience disproportionately high and adverse human health and environmental effects. In the interim, spent fuel will continue to be stored at existing nuclear power plant sites after reactor shutdown and decommissioning and away-from-reactor ISFSIs. The continued storage of spent fuel at existing reactor sites would not create any new effect on minority and low-income populations beyond what is currently being experienced. As indicated in the Commission's policy statement "Policy Statement on the Treatment of Environmental Justice Matters in NRC Regulatory and Licensing Actions" (69 FR 52040), environmental justice impacts are considered during the site-specific environmental assessments for specific licensing actions. Based on this information, the NRC disagrees with the commenter that the environmental justice impacts have not been fully evaluated in the GEIS. However, the NRC clarified the discussion in Section 4.3 of the GEIS as a result of these comments.

With regard to the Prairie Island Nuclear Generating Plant ISFSI license now under consideration, that review is outside the scope of this GEIS and rulemaking. If approved, the license renewal for the Prairie Island Nuclear Generating Plant ISFSI would allow for up to an additional 40 years of storage. Any future requests for license renewal would be reviewed in accordance with 10 CFR Part 72. Per the Commission's policy statement, the NRC considers environmental justice issues in all licensing and regulatory actions by conducting an environmental review and fulfilling its NEPA responsibilities for these actions. No changes were made to the Rule as a result of this comment.

(619-2-6)

D.2.23.8 – COMMENT: Six commenters disagreed with the use of the PFSF as the basis for determining impacts from an away-from-reactor storage facility due to environmental justice concerns. The commenters questioned NRC's commitment to observe environmental justice principles and cited the NRC's issuance of a license to PFSF as a violation of those principles. One commenter disputed the proposed location of the PFSF site in relation to the Skull Valley Band's Reservation and stated that the NRC's approval of that license was a violation of environmental justice and should not be relied upon as proof that away-from-reactor storage can be licensed.

RESPONSE: The NRC disagrees with the commenters. The NRC used the PFS EIS as a model in the GEIS to describe the physical characteristics of a hypothetical away-from-reactor ISFSI. It is important to note that the GEIS and rulemaking are not licensing actions and do not authorize the storage of spent fuel at an away-from-reactor ISFSI. Should the NRC receive an application for a proposed away-from-reactor ISFSI, a site-specific NEPA analysis would be conducted, and that analysis would include consideration of environmental justice impacts per the Commission's policy statement (69 FR 52040). No changes were made to the GEIS or Rule as a result of these comments.

(2-5) (127-3) (142-1) (336-9) (648-9) (919-6-13) (919-6-14) (919-3-16) (919-3-17)

D.2.23.9 – COMMENT: A commenter expressed concern that a statement within Section 4.3 of the draft GEIS could be misinterpreted. The commenter believed that the following statement: "human health and environmental effects from continued storage would be small compared to the impacts that are normally experienced during reactor operations" is unnecessary and could be interpreted to mean that reactors have large health effects. The commenter stated that it is sufficient to conclude that impacts would be SMALL without making a comparison to reactors.

RESPONSE: The NRC agrees with the comment that comparing human health impacts from continued storage to human health impacts normally experienced during reactor operations is unnecessary. As explained in the GEIS, the continued storage of spent fuel would not create

any new effect on minority and low-income populations beyond what is currently being experienced during reactor operations.

The environmental justice discussion in Section 4.3, has been revised to read, “A generic determination of the human health and environmental effects during continued storage is possible because the NRC has evaluated how environmental effects change when a nuclear power plant site transitions from reactor operations to decommissioning. Based on this knowledge, the NRC can provide a generic assessment of the potential human health and environmental effects during continued storage.” Based on this information, the original statement identified by the comment has been removed because it is unnecessary and could be misinterpreted. No changes were made to the Rule as a result of this comment.

(827-7-21)

D.2.23.10 – COMMENT: A commenter disputed the environmental justice impact findings within the draft GEIS, stating that environmental justice impacts would be LARGE, not SMALL, citing the displacement of indigenous peoples from their ancestral homelands. In particular, the commenter cited the displacement of the Northern Chumash Tribe and Mdewakanton Dakota (Prairie Island Indian Community) as examples.

RESPONSE: The NRC disagrees with the comment. As discussed in Chapter 4 of the GEIS, the overall human health and environmental effects from the continued storage of spent fuel in existing spent fuel pools and ISFSIs would be limited in scope and SMALL for all populations. Therefore, minority and low-income populations are not expected to experience disproportionately high and adverse human health and environmental effects from continued storage. In addition, continued storage would not create any new, added, or increased human health or environmental effects beyond what is currently being experienced at operating reactor sites. No changes were made to the GEIS or Rule as a result of this comment.

(326-56-2)

D.2.24 Comments Concerning Air Quality

D.2.24.1 – COMMENT: A State recommended that vehicles used in construction activities meet relevant EPA emissions standards and use designated routes to minimize impacts on residential and sensitive areas. The State also expressed concern about the health risks of diesel exhaust emissions and noted the regulatory requirements that apply to the use of diesel construction vehicles.

RESPONSE: The NRC acknowledges the State’s recommendation and comments. Based on its limited statutory authority under the AEA, the NRC cannot impose mitigation measures or standards that are not related to public health and safety from radiological hazards or common

defense and security. Any mitigation measures would be discussed in site-specific NEPA documents prepared to support a site-specific licensing action before the NRC, such as for the licensing of an away-from-reactor ISFSI. Further, licensees are required to comply with all applicable Federal, State, and local permit requirements relevant to their activities. No changes were made to the GEIS or Rule as a result of these comments.

(920-50) (920-52)

D.2.24.2 – COMMENT: The NRC received one comment that stated, with respect to a statement on the applicability of the EPA's General Conformity regulations, that the NRC should follow the general conformity provisions in 40 CFR 93.153 for activities "presumed to conform."

RESPONSE: The NRC disagrees with the comment. The NRC does not need to make a general conformity determination for this Federal action because determinations are not required for rulemakings; and, even if a determination analysis were prepared for continued storage, a conformity determination would not be necessary because any emissions due to continued storage would either not be an increase from the emissions during operations or would be a de minimis emissions increase.

As a rulemaking, this Federal action is not subject to the requirements in 40 CFR 93.153(c)(2)(iii) and the NRC does not need to make a conformity determination at this time. Prior to the issuance of a site-specific reactor or ISFSI license, the NRC will determine whether a general conformity determination is required. If a conformity determination is required, the NRC will make the conformity determination prior to the issuance of a site-specific license.

Even if paragraph 40 CFR 93.153(c)(2)(iii) did not apply here, the NRC would not be required to make a conformity determination in this rulemaking proceeding. Under 40 CFR 93.153(c)(2)(ii), a conformity determination is not necessary for continuing activities that are similar to current activities and that result in no emissions increase or a de minimis emissions increase. As noted in Section 4.4 of this GEIS, the NRC anticipates that the continued storage of spent fuel in existing spent fuel pools and at-reactor ISFSIs would result in no increase in emissions. The NRC also evaluates the potential impacts of constructing replacement at-reactor ISFSIs and DTS facilities in support of long-term storage in Section 4.4.2 of this GEIS. The NRC estimates that emissions of air pollutants during ISFSI replacement and construction, operation, and replacement of a DTS facility would also be well below de minimis levels in 40 CFR Part 93. Further, Section 5.4.1 presents the air quality impacts analysis for the construction of an away-from-reactor ISFSI of sufficient size to store 40,000 MTU fuel. Using the air emissions analysis previously performed by NRC for the proposed PFSF, the NRC concludes that annual emissions from construction of an away-from-reactor ISFSI of similar size would be below the prescribed de minimis levels. Nevertheless, the NRC would address the need for a general conformity determination as part of the environmental review and NEPA analysis performed in

support of any site-specific licensing actions, such as for licensing of a reactor or an away-from-reactor ISFSI. No changes were made to the GEIS or Rule as a result of this comment.

(920-48)

D.2.24.3 – COMMENT: One commenter stated that the draft GEIS did not provide a specific measure of how much or which substances are associated with fugitive dust emissions.

RESPONSE: The NRC disagrees with the comment. As discussed in the GEIS, the fugitive dust analyzed in the GEIS is limited to soil particulates that have been suspended in the air by ground-disturbing activities and vehicular traffic during site construction for an away-from-reactor ISFSI. The NRC determined that the fugitive dust emissions could result in SMALL to MODERATE impacts on air quality, terrestrial life, and transportation. These impacts are analyzed in Sections 5.4.1, 5.9.1, and 5.16.1 of the GEIS and summarized in Section ES.17. These impact determinations are based on the NRC's assessment of fugitive dust emissions and traffic associated with construction of an away-from-reactor ISFSI and its associated road and railway infrastructure. The NRC's impact determination that fugitive dust from these activities would have SMALL to MODERATE impacts is based on the localized nature of the impacts and relatively short duration of the construction period. No changes were made to the GEIS or Rule as a result of this comment.

(244-15-5)

D.2.24.4 – COMMENT: Several commenters expressed concern about the discussion in the GEIS of radiological releases into the air. One commenter questioned why the GEIS did not contain a discussion of how the NRC would judge air quality and an analysis of the human health impacts of inhaling the radioactive releases. Another commenter noted that the GEIS should consider radiological releases to the air from accidents, including explosions and fires, or successful terrorist attacks. Finally, one commenter stated that the GEIS should have addressed leakage of radioactivity from one or more ISFSIs during the indefinite timeframe.

RESPONSE: The NRC disagrees with the comments with respect to air quality impacts. Section 4.4 describes the potential air quality impacts resulting from continued storage in spent fuel pools and at-reactor ISFSIs during routine (normal) facility operations. The potential environmental consequences from accidents, including releases to the air, are discussed in Section 4.18 of the GEIS. The human health impacts of continued storage are discussed in Section 4.17 of the GEIS. Further, all NRC-licensed facilities must keep releases of radioactive material into the environment as low as is reasonably achievable (ALARA), as required by 10 CFR 50.36a and 10 CFR 72.44. Radiological releases, either normal permitted discharges in accordance with NRC regulations or inadvertent releases, are governed by NRC regulations and are part of the NRC's inspection program. As detailed in Section 3.16.1.2 of the GEIS,

NRC regulations in 10 CFR 72.104 identify criteria for radioactive materials in effluents and direct radiation from an ISFSI.

The loss of institutional controls, which was raised in one comment as being an issue with respect to air quality, is addressed in more detail in Section D.2.19 of this appendix and in Section 1.8.3 of the GEIS. No changes were made to the GEIS or Rule as a result of these comments.

(919-6-18) (919-6-20) (919-6-22) (937-27)

D.2.24.5 – COMMENT: One commenter questioned why p. 4-15, line 12 of the draft GEIS states that testing requirements may be reduced or eliminated for emergency diesel generators once the reactor is permanently shut down. The commenter stated that emergency diesel generators may be needed to maintain spent fuel pool cooling.

RESPONSE: The NRC agrees with the comment with respect to the operation of emergency generators. The NRC did not intend to imply that safety systems, including emergency diesel generators, would be entirely eliminated; rather the NRC only meant to state that testing for systems no longer necessary to maintain or restore reactor core or spent fuel cooling could be reduced or eliminated. Following the termination of reactor operations, spent fuel would continue to be subject to the NRC's regulatory oversight under either a possession-only 10 CFR Part 50 license or a 10 CFR Part 72 license. The text in Section 4.4.1 of the GEIS has been revised to clarify the intended meaning. No changes were made to the Rule as a result of this comment.

(919-6-19)

D.2.24.6 – COMMENT: Several commenters questioned the NRC's statements in the GEIS that storage of spent fuel in ISFSIs would cause ambient temperature increases of 2.1°C (3.8°F) at 1 km (0.6 mi) to 0.1°C (0.2°F) at 10 km (6.2 mi) from the site. Another commenter stated that these impacts are significant, that they are equivalent, on a local level, to the impacts of global warming, and that the impacts of global warming and local warming from ISFSIs should be considered together. An industry organization noted that they were unable to identify any instances of ISFSI operation causing ambient temperature increases.

RESPONSE: The NRC agrees with the commenters' concerns about these statements in the GEIS. As redrafted, the GEIS predicts a less significant thermal impact. The NRC used incorrect temperature-change scaling factors in the draft GEIS, which resulted in predicted increases of ambient temperature that were much greater than the NRC expects to occur at ISFSI sites. Specifically, the cited predictions in the draft GEIS of local atmospheric heating were derived from a reference monitored retrievable storage (MRS) installation storing 60,800 metric tons of HLW and spent fuel. The cited study provides temperature-change scaling factors per metric ton stored. In the draft GEIS, the NRC incorrectly used the temperature-change scaling factors applicable to storing 60,800 metric tons of waste instead of the 1,600

metric tons for an at-reactor ISFSI. The NRC has used the correct factors to revise its estimates in the final GEIS, which results in localized atmospheric heating of 0.05°C (0.09°F) at 1 km (0.6 mi) from the site. The text in Section 4.4 of the GEIS has been revised to reflect these corrections. No changes were made to the Rule as a result of these comments.

(827-7-23) (919-6-21)

D.2.25 Comments Concerning Climate Change

D.2.25.1 – COMMENT: One commenter stated that sea-level rise is not occurring at a rate that would compromise the ability of those who manage ISFSIs to continue to assure their safety. The commenter, citing a report by the Intergovernmental Panel on Climate Change, stated that even the most extreme scenarios postulated that sea-level rise will occur at a pace of less than 10 mm/year. At this rate, the commenter stated that ISFSI licensees will have ample opportunity to prepare and take necessary mitigative actions (including the movement of casks to higher ground, if necessary). The commenter stated that such measures will be addressed, as required by NRC regulations, in license renewal applications that will be submitted every 20 to 40 years for as long as the casks are in service.

RESPONSE: The NRC agrees in part and disagrees in part with the comment. The NRC agrees that the rate of sea-level rise provides time for the NRC to require corrective actions to ensure storage of spent fuel continues with minimal impacts. As discussed in Section D.2.25.4 of this appendix, the NRC revised the GEIS to identify specific corrective actions in response to sea-level rise, including the movement of casks to higher ground. The NRC disagrees with the comment that the mechanism used to implement corrective actions occurs during license renewal. Section 4.18.1 of the GEIS specifies that ongoing regulatory oversight (e.g., 10 CFR Part 50, Appendix B, Section XVI and 10 CFR 72.172) requires corrective actions to identify and correct conditions adverse to safety. Text in Sections 4.18.1.1, 4.18.1.2, 4.18.2.1 and 4.18.2.2 of the GEIS has been added in response to the comment. No changes were made to the Rule as a result of this comment.

(827-4-2)

D.2.25.2 – COMMENT: The NRC received comments in favor of continuing nuclear power to reduce greenhouse gas emissions, and other comments that the U.S. and the rest of the World should end its reliance on nuclear power in light of the increased environmental hazards associated with climate change. Some commenters cited the findings of a United Nations' Intergovernmental Panel on Climate Change report to support continuing nuclear power.

RESPONSE: The NRC acknowledges these general comments. The suitability of nuclear power as an energy source in light of global climate change is outside the scope of the GEIS and Rule. No changes were made to the GEIS or Rule as a result of these comments.

(30-19-1) (30-18-4) (30-19-5) (61-4) (112-12-1) (112-9-1) (112-4-2) (112-12-4) (163-29-6) (163-29-7) (246-23-1) (246-21-4) (246-10-5) (325-5-4) (326-24-2) (326-16-3) (410-19)

D.2.25.3 – COMMENT: One commenter stated that the NRC should consider the combined global effects of radiological releases from the March 2011 accident at the Fukushima Dai-ichi nuclear power plant and climate change. Specifically, the commenter described the combined effects of sea-level rise and diminishing food supplies from the Pacific Ocean on global food supply. The commenter noted that sea-level rise will also reduce available living space and result in chaos and societal degeneration.

RESPONSE: The NRC disagrees with the comment. The environmental consequences of the accident at the Fukushima Dai-ichi nuclear power plant following the March 2011 earthquake and subsequent tsunami are considered outside the scope of this GEIS as discussed in Section D.2.52.1 of this appendix. As discussed in Section 4.18.1 of the GEIS, the NRC acknowledges that climate change may have impacts across several resource areas. The GEIS also states that the discussion of impacts from climate change on the environment will focus on the climate change impacts that affect continued storage of spent fuel. This approach is consistent with the February 18, 2010 CEQ memo, “Draft NEPA Guidance on Consideration of the Effects of Climate Change and Greenhouse Gas Emissions,” that was issued to Federal departments and agencies (CEQ 2010). The NRC considers the types of changes associated with sea-level rise as identified by the comment (i.e., food supply, living space, and societal chaos and degeneration) to be beyond the focus of the GEIS climate change analysis. In Section 4.18.1 of the GEIS, the NRC refers readers to the U.S. Global Change Research Program report Climate Change Impacts in the United States (GCRP 2014) for a more comprehensive description of potential climate change impacts on the environment. No changes were made to the GEIS or Rule as a result of this comment.

(328-7-2)

D.2.25.4 – COMMENT: Several commenters stated that the GEIS should have considered the effects of global climate change on the safety of continued storage of spent fuel. The commenters also argued that the GEIS should be updated to consider the possible reduced availability and higher temperatures of surface water required for spent fuel cooling and the effects of more frequent and severe natural events, such as high winds from storms and flooding from both rising sea levels and storm surges. Many commenters expressed concern that rising sea levels will affect coastal and low-lying facilities, which could result in environmental impacts not considered in the GEIS. For example, some commenters claim that the rise in sea level predicted in the GEIS will place a number of facilities under water. The commenters believe that the GEIS should be updated to consider this possibility. Some commenters also note that the NRC’s predicted sea-level rise does not consider the entire continued storage period. These commenters argue that the NRC must consider how sea level will change over hundreds of years, not between now and 2050 as analyzed in the GEIS. One

commenter argued that the NRC must consider climate change impacts for all three timeframes. Commenters expressed other safety concerns related to climate change, including less reliable offsite electricity supplies, coastal erosion, ocean acidification, and increased potential for wildfires. One commenter stated that the GEIS should have considered climate change impacts on infrastructure that facilities rely on, including roadways and hospitals. Two commenters suggested that the NRC should have performed an analysis of the worst-case scenario for climate change impacts.

Many commenters argued that the uncertainties associated with climate-change-related phenomena, such as sea-level rise and increased surface-water temperature, make a generic analysis of continued storage inappropriate. These commenters believe that the site-specific differences in the environment and facilities analyzed in the GEIS require the NRC to prepare a site-specific analysis of the environmental impacts of continued storage. For example, some commenters challenged the NRC's use of a global average in sea-level rise. The commenters believe that a more accurate and realistic model would use regional or local predictions of sea-level rise. Another commenter stated that climate models predict that by 2050 Illinois is likely to have the climate of East Texas. In this case, the commenter claims, the volumes and flow rates of rivers will be reduced significantly, which would undermine the NRC's assumptions regarding dilution of groundwater contaminants. Finally, one commenter noted that the NRC should use the Surging Seas tool to model sea-level rise.

RESPONSE: The NRC agrees in part and disagrees in part with the comments. The NRC agrees that the GEIS should include additional information on climate change, including the findings of the most recent National Climate Assessment by the U.S. Global Change Research Program. The GEIS contains the following revisions related to climate change:

- Section 4.18.1 now includes water availability and quality (i.e., temperature) among the hazards associated with climate change.
- Section 4.18.1 clarifies the timeframe used in the analysis.
- Section 4.18.2 now discusses possible corrective actions for continued storage facilities that could be threatened by rising sea level.
- The GEIS has also been revised to remove the 2050 date for sea-level rise and now addresses a range of projections for sea-level rise as discussed in Section D.2.25.9 of this appendix. This, combined with the corrective actions for climate change impacts on continued storage, responds to comments that some coastal facilities may not be viable fuel storage facilities.

Safety concerns related to climate change can be addressed through the current regulatory processes and the corrective actions added to the GEIS text. Regarding ocean acidification impacts on casks, oceans can become corrosive in areas where there is enough carbon dioxide present, however, the NRC ensures cask integrity by requiring corrective actions under 10 CFR Part 72.

Regarding climate change impacts on infrastructure, the GEIS analysis of impacts from climate change on the environment focuses on impacts affecting the safety of continued storage. As described in Sections 4.18.1.1, 4.18.1.2, 4.18.2.1, and 4.18.2.2 of the GEIS, in the event of climate change-induced sea-level rise, the NRC would require licensees to implement corrective actions to identify and correct conditions adverse to safety. The NRC requires licensees to take these corrective actions regardless of the mechanism creating the condition adverse to safety. Revisions of the GEIS in response to other comments concerning sea-level rise and the associated impact analysis are discussed in Section D.2.25.9 of the appendix. No changes were made to the GEIS or Rule as a result of these specific comments.

The NRC disagrees that a worst-case scenario should be analyzed for climate change impacts. NEPA does not require agencies to conduct a worst-case analysis, but rather to assess the reasonably foreseeable environmental impacts of the proposed action.

The NRC disagrees that a generic analysis of climate change cannot be performed, instead of a site-specific analysis, for a number of reasons as outlined in Section D.2.8 of this appendix.

The NRC disagrees that the impacts of climate change invalidate its conclusion that sufficient surface water will be available to dilute groundwater contaminants. As outlined in Section 1.8.2 and in Appendix E (Analysis of Spent Fuel Pool Leaks), the NRC assumes that all spent fuel has already been moved from the spent fuel pool to dry cask storage by the end of the short-term storage timeframe. Appendix E describes the various hydrologic and chemical processes that could reduce the environmental impacts of radionuclides associated with leaked spent fuel pool water. In addition, Table E-2 demonstrates that the radioactivity associated with spent fuel pool leaks is comparable to that of normal operating power plant releases. Appendix E states that surface waterbodies in the vicinity of nuclear power plants (e.g., oceans, lakes, or rivers) are large enough to meet reactor cooling requirements, and a large volume of surface water is usually available, which would dilute any groundwater contaminants that flow into them. The NRC disagrees that the specific summertime, high emissions scenario for Illinois referenced in the comment invalidates the findings in the GEIS regarding spent fuel pool leaks.

The NRC disagrees with the use of the Surging Seas tool for the GEIS analysis because that tool includes storm surge along with sea-level rise, and projections of sea-level rise and storm surge differ from the U.S. Global Change Research Program (GCRP). The NRC's review of impacts caused by climate change relies principally on the GCRP report from 2014. Consideration of using sea-level rise projections from sources other than GCRP 2014 and the adequacy of the GEIS analysis associated with these projections is discussed in Section D.2.25.9 of this appendix. No changes were made to the Rule as a result of these comments.

(30-21-8) (86-5) (112-16-1) (112-16-2) (112-35-2) (112-16-3) (112-5-3) (112-18-6) (143-9) (163-40-2) (227-1) (233-4) (244-8-2) (244-14-8) (245-11-2) (245-15-2) (245-5-2) (245-25-3) (245-8-3) (245-11-4) (245-31-5) (246-31-2) (277-10) (277-4) (303-10) (325-28-3) (328-11-6) (329-24-1)

(329-27-1) (329-5-2) (329-5-3) (357-8) (417-9) (473-17-1) (507-7) (552-1-19) (552-1-20) (552-1-21) (553-7) (556-1-18) (558-1) (558-7) (558-8) (558-9) (622-4-12) (622-4-3) (622-4-4) (622-4-7) (622-4-9) (633-5) (662-4) (669-13) (669-15) (693-2-14) (707-9) (711-39) (716-12) (805-7) (864-13) (920-13) (920-26) (920-29) (938-11) (1001-1)

D.2.25.5 – COMMENT: A commenter stated that the GEIS nowhere references revisions to the design basis flood that may have occurred since facilities were initially licensed. The commenter stated that the GEIS should also evaluate the increased likelihood of potentially climate-change-induced beyond-design-basis events, like Superstorm Sandy, and additional adaptation measures to respond to such events.

RESPONSE: The NRC agrees with the comment in part. As part of the Japan lessons-learned activities resulting from the March 2011 earthquake and tsunami, the NRC has used its regulatory authority under 10 CFR 50.54 to request flood reevaluations of existing nuclear power plants. Licensees of operating nuclear power plants have been asked to reevaluate the flooding hazards that could affect their sites using present-day information. These newly reevaluated hazards, if worse than what the plant had originally calculated upon initial licensing, will be analyzed to determine whether plant structures, systems, and components need to be updated to protect against the new hazards. The initial flood design basis is discussed in Section 4.18.1 of the GEIS in the Floods subsection. Text has been added to Section 4.18.1.1 of the GEIS that discuss subsequent flood design basis considerations. No changes were made to the Rule as a result of this comment.

(473-17-5)

D.2.25.6 – COMMENT: One commenter stated that the draft GEIS neglected to evaluate the effects of climate change on drinking-water security.

RESPONSE: The NRC disagrees with the comment. As described in Section 4.18.1 of the GEIS, the NRC acknowledges that climate change may have impacts across several resource areas. This includes water resources, a subset of which is drinking-water security or the availability of drinking water in terms of both quality and amount. However, as stated in Section 4.18.1 of the GEIS, the discussion of impacts of climate change on the environment will focus on those climate change impacts that affect continued storage. This approach is consistent with the February 18, 2010 CEQ memo, “Draft NEPA Guidance on Consideration of the Effects of Climate Change and Greenhouse Gas Emissions” (CEQ 2010), issued to Federal departments and agencies. The NRC considers climate change impacts related to drinking-water supply and quality to be outside of the scope of the GEIS climate change analysis. No changes were made to the GEIS or Rule as a result of this comment.

(531-1-8) (531-2-8)

D.2.25.7 – COMMENT: Several commenters stated that the GEIS should include the results of an investigation of the carbon effects of the entire nuclear fuel cycle, including plant decommissioning, as well as the environmental effects of Freon releases from converting uranium to fuel.

RESPONSE: The NRC disagrees with the comments. The cumulative impact analysis for climate change in Section 6.4.5 of the GEIS considered the contribution of the uranium fuel cycle to greenhouse gas emissions. Specifically, Table 6-2 of the GEIS incorporated the uranium fuel cycle, including decommissioning, in the estimate of annual greenhouse gas emissions from a nuclear power plant.

Freon 114, a greenhouse gas, is released from the uranium fuel cycle; however, in the EPA's greenhouse gas endangerment finding (74 FR 66496), the EPA found that six long-lived and directly emitted greenhouse gases (carbon dioxide [CO_2], methane [CH_4], nitrous oxide [N_2O], hydrofluorocarbons [HFCs], perfluorocarbons [PFCs], and sulfur hexafluoride [SF_6]) taken in combination endanger both the public health and the public welfare of current and future generations. The EPA did not include chlorofluorocarbons like Freon-114 as part of the endangerment finding. The NRC's uranium fuel cycle emissions total does not include Freon, consistent with the EPA's finding. The NRC considers the greenhouse gas footprint in Table 6-2 to be appropriately conservative. The greenhouse gas emissions estimates for the dominant component (uranium fuel cycle) are based on 30-year old enrichment technology assuming that the energy required for enrichment is provided by coal-fired generation. Different assumptions related to the source of energy used for enrichment or the enrichment technology that would be just as reasonable could lead to a significantly reduced footprint.

Additional discussion of the NRC's use of Table S-3 for uranium fuel cycle impacts is provided in Section D.2.7.9 of this appendix. Because the GEIS already considers the impacts of greenhouse gas emissions from fuel cycle activities in the cumulative impact analysis, no changes were made to the GEIS or Rule as a result of these comments.

(30-12-6) (45-11-9) (622-1-16)

D.2.25.8 – COMMENT: A commenter stated that Section 4.5.3 of the GEIS should consider that indefinite emissions of small amounts of greenhouse gases could result in adverse impacts.

RESPONSE: The NRC disagrees with the comment. Section 4.5.3 of the GEIS considers greenhouse gas emissions over the indefinite timeframe. As explained in Section 4.5.3, emission levels during the indefinite period would be the same as those during the long-term timeframe, but would occur on an ongoing basis over a longer period of time. Annual emissions, similar to the long-term timeframe, would continue to be small relative to global emissions. Section 6.4.5 addresses the cumulative impacts of greenhouse gas emissions, and

Table 6-2 compares annual CO_2 emission rates from various sources. No changes were made to the GEIS or Rule as a result of this comment.

(919-7-2)

D.2.25.9 – COMMENT: One commenter stated that in addition to static sea-level rise, the GEIS should have examined other hazards to spent fuel storage facilities, including increased storm surges, erosion, shoreline retreat, inland flooding, and land subsidence of coastal areas. Another commenter stated that the analysis of sea-level rise should have considered uncertainties in sea-level rise projections and how sea-level rise could affect the frequency and severity of flooding. This commenter suggested that the NRC consider more recent projections of sea-level rise than were cited in the 2010 Waste Confidence Decision and Rule (75 FR 81037), including the most recent 2013 draft of the National Climate Assessment (previously found at http://www.globalchange.gov), which states that in the context of risk-based analysis, some decisionmakers may wish to use a wider range of scenarios for sea-level rise—from 8 in. to 6.6 ft. The commenter also noted that the draft report states that the high end of these scenarios may be useful for decisionmakers with a low tolerance for risk. In the opinion of the commenter, nuclear waste storage epitomizes an area where there is a low tolerance for risk. The commenter also stated that sea-level rise is not uniform and will vary considerably among different regions, citing a report of the New York City Panel on Climate Change.

RESPONSE: The NRC agrees in part and disagrees in part with the comments. Text was added to Section 4.18.1 of the GEIS to address a range of projections for global sea-level rise from the GCRP 2014 report. In addition, Section 4.18.2 of the GEIS has been revised to discuss corrective actions for fuel storage that could be affected by rising sea level and increased storm surges. These corrective actions would be applicable to the other climate change impacts mentioned by the commenter.

The NRC disagrees with the use of the recent 2013 draft National Climate Assessment previously located at http://www.globalchange.gov. The Global Change Research Act requires that, every four years, the GCRP prepare and submit to the President and Congress a National Climate Assessment of the effects of climate change in the United States. The NRC's review of impacts caused by climate change in the GEIS relies principally on the 2009 GCRP report, *Global Climate Change Impacts in the United States* (GCRP 2009), which was the current final version of the National Climate Assessment at the time the draft GEIS was prepared. This report synthesizes the work of the Federal government on climate change. The GCRP reports and peer-reviewed assessments from GCRP were suggested as sources of the best scientific information available on the reasonably foreseeable climate change impacts in the February 18, 2010 CEQ memo, *Draft NEPA Guidance on Consideration of the Effects of Climate Change and Greenhouse Gas Emissions* (CEQ 2010), issued to Federal departments and agencies. The GEIS does not reference the 2013 draft National Climate Assessment because at the time the draft GEIS was prepared, the 2013 report was still in draft form and therefore subject to change.

However, the GCRP released the final version of the new National Climate Assessment (GCRP 2014) in May 2014. The GEIS was updated for consistency with the final version of the new National Climate Assessment, including changes in Section 4.18.1.1 concerning new sea-level rise projections that are greater than the projections in the 2009 GCRP report.

Section 4.18.2 of the GEIS assesses the environmental impacts of severe accidents, including consideration of climate change, during continued storage of spent fuel. The GEIS analysis did not specify a numeric value for sea-level rise that results in a severe accident. However, by examining severe accidents in the GEIS, the NRC analyzes instances where changes in sea-level rise, regardless of the specific value, challenge the safety of continued storage. Therefore, the NRC believes that the GEIS analysis addresses potential impacts for instances where sea-level rise is greater than that identified in the GCRP 2009 report, such as those presented in the 2014 National Climate Assessment. No changes were made to the Rule as a result of these comments.

(473-17-3) (473-17-6) (558-4) (558-5)

D.2.26 Comments Concerning Geology and Soils

D.2.26.1 – COMMENT: A commenter stated that NRC did not evaluate the impacts of geology on continued storage. The commenter stated that consideration of the impacts of geology on continued storage would include considering any new theories, data collection, mapping of the local and regional geology around a facility and how that would impact the original estimations of the potential severity of natural disasters such as landslides, earthquakes or sinkholes at a facility. Referring to Section 3.5 of the GEIS, which describes the geology and soils that may be affected by continued storage of spent fuel, the commenter stated that the NRC should use more modern interpretations of the local or regional geology based on modern geologic mapping, and review changes in seismic hazard ratings based on data obtained since earlier plants were built.

RESPONSE: The NRC disagrees with the comments. The potential environmental consequences of postulated accidents, such as earthquakes, are discussed in Section 4.18 of the GEIS; an examination of accident analyses, including earthquakes, for existing facilities is outside the scope of this rulemaking and GEIS. Further, as part of an initial site-specific licensing or relicensing action, the NRC considers site-specific geologic and soil conditions for each nuclear power plant and associated ISFSI. The conclusions reached in previous licensing actions are not being revisited in this GEIS, and the commenter did not provide any additional information that would cause the NRC to reconsider these site-specific licensing actions. This GEIS does not replace the site-specific NEPA analysis required for any individual site-specific licensing action. As necessary, these issues are addressed by the NRC on an ongoing basis at all licensed nuclear facilities.

The issues raised by the commenter are addressed by license applicants and the NRC at the initial licensing stage. All currently operating U.S. nuclear power plants were sited using geologic and seismic criteria set forth in 10 CFR Part 100; these facilities were designed and constructed in accordance with 10 CFR Part 50. The regulations require that plant structures, systems, and components important to safety be designed to withstand the effects of natural phenomena, including earthquakes and other natural phenomena, without loss of capability to perform safety functions. Site-specific design bases for seismic protection are prescribed by a nuclear power plant's Final Safety Analysis Report (FSAR)/Updated Final Safety Analysis Report and by applicable technical specifications. Further, nuclear power plants licensed after January 10, 1997, are subject to the more rigorous geologic and seismic site-acceptability and design criteria established in 10 CFR 100.20 and 100.23, and 10 CFR Part 50, Appendix S. All safety-related structures (i.e., Seismic Category I structures) at nuclear power plants are founded either on competent bedrock, engineered compacted strata, concrete fill, and/or structural backfill to ensure that no safety-related facilities are constructed in potentially unstable materials.

As referenced above, the NRC has a process in place to address the changing state of knowledge in various scientific disciplines. When new information about natural phenomena that could affect the safety of operating nuclear power plants becomes available, such as information related to seismic hazards, the NRC evaluates the new information, through the appropriate regulatory program—such as the reactor oversight program—to determine if any changes are needed at these plants. The NRC does not wait until a specific rulemaking action or specific licensing action is under consideration. For example, the NRC took regulatory action after the March 2011 earthquake and tsunami at the Fukushima Dai-ichi nuclear power plant. As described in Section 2.1.2.1 of this GEIS, the NRC issued multiple orders and a request for information to all of its nuclear power plant licensees on March 12, 2012. These orders included a formal request to all licensees for information to assist the NRC in reevaluating seismic as well as flooding hazards at operating reactor sites. This process is ongoing, and, if necessary, the NRC will use the information collected to determine whether to update the design basis and systems, structures, and components important to safety, including spent fuel pools. Section 4.18 and Appendix F of this GEIS provide further details regarding the NRC's orders and requests for information in response to the Fukushima events. No changes were made to the GEIS or Rule as a result of these comments.

(920-14) (920-27) (920-32)

D.2.26.2 – COMMENT: A commenter stated that the GEIS should consider the impacts that varying soil types would have on the long-term stability—and therefore the risk for a potential accident—at a plant's ISFSI. For example, the commenter pointed to sandy soil types reported at the Pilgrim Nuclear Power Station.

RESPONSE: The NRC disagrees with the comment. Although site conditions including geology and soils are generically discussed in Sections 3.5 and 4.6 of the GEIS with respect to the at-reactor-site continued storage of spent fuel, site-specific geologic and soil conditions, as they relate to accidents, do not need to be considered for this generic analysis. Site-specific geologic and soil conditions were, however, considered for each nuclear power plant and associated ISFSI when the facilities were first licensed. These site-specific issues will be considered for new-facility license applications and license renewal applications. The conclusions reached in those earlier licensing actions are not being revisited in this GEIS. The potential environmental consequences from postulated accidents involving the continued storage of spent fuel are discussed in Section 4.18 of the GEIS. No changes were made to the GEIS or Rule as a result of this comment.

(622-2-3)

D.2.26.3 – COMMENT: One commenter stated that the conclusion in Section 4.6 of the GEIS (i.e., that the environmental impact of spent fuel pool leaks to offsite soils would be SMALL) does not take into account specific leaks identified in Table E-4 of Appendix E of the GEIS. In addition, the commenter also stated that documented spent fuel pool leaks at the Brookhaven National Laboratory and Yankee Rowe facilities should be included in Table E-4 and considered in the analysis for their contribution to groundwater and soil contamination.

RESPONSE: The NRC disagrees with the comment. Section 4.6.1 of the GEIS describes the potential environmental impacts on geology and soils caused by the continued onsite storage of spent fuel, and Section 4.8.1.1 of the GEIS evaluates the potential impacts on groundwater quality from the storage of spent fuel in spent fuel pools during the short-term timeframe. As described in Section E.2.2.3 of the GEIS, the extent of soil contamination is influenced by several factors, including soil type, direction of groundwater flow, and leak size. Because of the radionuclide-transport processes discussed in Section E.2.1.2 of the GEIS, most radionuclides in spent fuel pool water are likely to be absorbed onto the concrete structure of the spent fuel pool, or soils surrounding the leak location. Further, because the hydrogeological conditions at most sites are such that contamination will either remain onsite, or be directed to a nearby surface waterbody, it is unlikely that offsite soil contamination would occur.

Continued storage in spent fuel pools could result in radiological impacts on groundwater leading to soil contamination as described in Sections 4.6.1, 4.8.1.1, E.2.2.1, and E.2.2.3 of the GEIS. However, the NRC believes that it is unlikely that a leak during the short-term timeframe would remain undetected for a significant period and impact offsite groundwater receptors. Several factors, summarized in Sections 4.6.1 and 4.8.1.1 of the GEIS, inform this assessment. First, and as detailed in Sections E.1.1 and E.2.1.1 of the GEIS, spent fuel pool design (e.g., stainless-steel liners and leakage-collection systems) and operational controls (e.g., monitoring and surveillance of spent fuel pool water levels) make it unlikely that a leak will remain undetected for a significant period of time and impact offsite groundwater receptors. Second,

the hydrologic characteristics associated with typical nuclear power plant settings (see Section E.2.1.3 of the GEIS) act to impede the offsite migration of future spent fuel pool leakage. Third, licensees at current and future spent fuel pool sites are required to have routine REMPs in place to detect subsurface contamination, including contamination in groundwater. Any detections would likely result in additional monitoring and subsurface characterization.

In addition, licensees are required by 10 CFR 20.1501(a) to conduct subsurface surveys to identify and characterize contamination. As described in Section E.1.2 of the GEIS, licensees have implemented groundwater monitoring programs in accordance with the industry's voluntary industry-wide initiative (NEI 2007), which satisfies the intent of 10 CFR 20.1501(a). Performing onsite groundwater monitoring throughout the short-term timeframe, in conjunction with other onsite and offsite radiological monitoring required of licensees, will serve as an important mechanism to detect radiological contamination in the event of a spent fuel pool leak, and should facilitate timely detection of a leak. Should the hydrogeologic characteristics of the site change during the short-term timeframe, licensees would need to update onsite and offsite monitoring programs, as necessary, to ensure any potential exposure pathways are appropriately monitored.

Table E-4 of Appendix E of the GEIS, lists suspected and confirmed reactor spent fuel pool leaks and provides a representative baseline for NRC's analysis of future impacts from leaks. Table E-4 has been updated to include additional leak examples, as further described in Section D.2.40.8 of this appendix. The leaks associated with the Brookhaven National Laboratory facility and Yankee Rowe facilities were considered by the NRC in its 2006 Liquid Radioactive Release Lessons Learned Task Force Final Report (NRC 2006a), which is cited in the GEIS as a primary source in preparing Appendix E.

The Brookhaven National Laboratory is a DOE-owned High Flux Beam Reactor research facility that was not licensed by NRC and that does not store commercial spent fuel. As this is neither a commercial nuclear power reactor nor an away-from-reactor ISFSI, its activities are not within the scope of this GEIS and Rule. Unlike NRC-licensed reactors, the Brookhaven National Laboratory facility's spent fuel pool lacked lining and a tell-tale drain system. Owing to these crucial differences, the Brookhaven National Laboratory facility was not included in Appendix E as a representative leak example.

As discussed in Section B.3.3.3 of the GEIS, the decommissioned Yankee Rowe reactor site now consists only of an ISFSI subject to a 10 CFR Part 50 license and a 10 CFR Part 72 general license. After removal of spent fuel from the pool and pool drainage was completed in 2003, groundwater monitoring in 2005 detected tritium. The NRC (2006) does not identify Yankee Rowe's spent fuel pool as the source of tritium to groundwater, and this occurrence was originally omitted from Table E-4 in Appendix E of the GEIS. Most or all of the contamination at Yankee Rowe is suspected to have come from a series of leaks from the ion exchange pit, as further described in Section D.2.40.8 of this appendix. However, because a spent fuel pool leak

at Yankee Rowe cannot be ruled out, the NRC has updated Table E-4 of the GEIS to include leak information from Yankee Rowe. No changes were made to the Rule as a result of these comments.

(919-7-3)

D.2.26.4 – COMMENT: Two commenters stated that the GEIS dismisses the effect of leaking storage facilities on the migration of radiological contaminants in soils. According to the commenters, this migration involves soil biota and biota all the way up the predatory scale. They stated the GEIS should consider the history of contamination through biological pathways at the Hanford Site.

RESPONSE: The NRC disagrees with the comments. As noted in Section 4.3 of the GEIS, with respect to environmental justice and consideration for contaminant uptake, all NRC licensees are required to assess the impact of facility operations on the environment through a REMP. REMPs assess the effects of site operations on the environment that could affect special pathway receptors. Special pathways take into account the levels of contamination in native vegetation, crops, soils and sediments, surface water, fish, and game animals on or near power plant sites to assess the risk of radiological exposure through (1) subsistence consumption of fish, native vegetation, surface water, sediment, and local produce; (2) the absorption of contaminants in sediments through the skin; and (3) the inhalation of airborne particulate matter. REMPs provide a mechanism for determining the levels of radioactivity in the environment. REMP implementation allows licensees and regulators to ensure that any accumulation of radionuclides released into the environment will not become significant. With respect to DOE's Hanford site, the experience at the site does not cause the NRC to doubt the effectiveness of a REMP in preventing contamination from NRC-licensed facilities. Even once reactor operations cease, a REMP would be required to consider the potential sources of radiation and radioactivity that may be released from a spent fuel pool or at-reactor ISFSIs in accordance with NRC regulations at 10 CFR 20.1501; 10 CFR 50, Appendix A, Section VI; and 10 CFR 72.44(d). No changes were made to the GEIS or Rule as a result of these comments.

(553-8) (805-8)

D.2.26.5 – COMMENT: A commenter stated that the GEIS could not make a generic determination that environmental impacts on geology and soil would be SMALL because the determination requires consideration of site-specific factors, including soils present at each location (and general geomorphology for coastally sited plants), the site's vulnerability to erosion, the amount of fuel stored in pools, and the type of storage facility being planned.

RESPONSE: The NRC disagrees with the comment. The GEIS presents a generic analysis of the potential environmental impacts on geology and soils and other resources associated with continued storage. The NRC has determined in the GEIS that the environmental impacts of continued storage can be analyzed generically. While the NRC used some site-specific

information to inform its analysis, this GEIS does not replace the site-specific NEPA analysis that would be conducted for individual site-specific licensing actions. The analysis in this GEIS applies to future NRC licensing actions, which will consider recent developments in science and engineering as part of the license application review process. No changes were made to the GEIS or Rule as a result of this comment.

(622-2-1)

D.2.27 Comments Concerning Hydrology

D.2.27.1 – COMMENT: Commenters stated that the GEIS did not contain an analysis of the potential for groundwater impacts over time. One commenter noted that the Union of Concerned Scientists has documented that 100 reactors in the United States already have leaks that threaten or have already caused groundwater contamination and that the GEIS does not recognize long-term issues associated with locating over 70,000 metric tons of highly radioactive spent fuel on top of groundwater for an unbounded period of time. The commenter further stated it is a NEPA violation to fail to address groundwater impacts at each specific site, and that the Rule could deny the public the opportunity to address groundwater contamination issues in specific licensing actions.

RESPONSE: The NRC disagrees with the comments that the GEIS does not address the potential impacts on groundwater associated with the storage of spent fuel over time. The GEIS generically evaluates the environmental impacts of continued storage, but the environmental impact analyses presented are informed by the wide range of environmental conditions at existing reactor sites. This means that, for each of the resource areas analyzed in the GEIS, including surface water and groundwater, the NRC has reached a generic determination (SMALL, MODERATE, LARGE, or a range) that is appropriate for all sites. The assumptions used in the analysis are sufficiently conservative to bound the impacts such that variances that may occur from site to site are unlikely to result in environmental impact determinations greater than those presented in the GEIS.

While the NRC used some site-specific information to inform its analysis, the GEIS does not replace the site-specific NEPA analysis that would be conducted for individual site-specific licensing actions. The analysis in the GEIS applies to future NRC licensing actions, which will consider recent developments in science and engineering as part of the license application review process. To be specific, Section 3.7 of the GEIS broadly characterizes the groundwater systems at existing nuclear power plant sites that may be relevant to continued storage in spent fuel pools and at-reactor ISFSIs. Section 4.8 evaluates the potential impacts on groundwater use and quality of continued storage of spent fuel in pools and at-reactor ISFSIs. Section 4.8.1.1 of the GEIS evaluates the potential impacts on groundwater quality from continued short-term storage, while Section 4.8.1.2 of the GEIS evaluates the potential impacts on groundwater quality from operating an ISFSI, which are limited to the infiltration of stormwater

runoff carrying grease and oil, and spills from operating equipment that supports the dry cask storage facility. As discussed in Section 4.8.1.2 of the GEIS, the NRC concludes that the impacts on groundwater quality and consumptive use associated with the long-term storage of spent fuel in an at-reactor ISFSI would be SMALL.

With respect to spent fuel pool leakage, continued storage could result in radiological impacts on groundwater as described in Sections 4.8.1.1 and E.2.2.1 of the GEIS. However, as further detailed in Section D.2.27.3 of this appendix, a variety of factors act to minimize the effects of a spent fuel pool leak to the environment. These include spent fuel pool design (e.g., stainless-steel liners and leakage-collection systems) and operational controls (e.g., monitoring and surveillance of spent fuel pool water levels). In addition, the site hydrologic characteristics associated with typical nuclear power plant settings (see Section E.2.1.3 of the GEIS) act to impede the offsite migration of spent fuel pool leakage, should the leakage reach the environment. The combination of these factors makes it unlikely that a leak will reach the environment, or remain undetected for a significant period such that it would impact offsite groundwater receptors.

Spent fuel pool leaks have caused radioactive liquid releases to the environment, as detailed in Section E.3 of the GEIS. According to available data, radiological contamination from spent fuel pool leaks has remained onsite within each licensee's owner-controlled area or traveled to a nearby surface waterbody, and none of these releases have affected the health of the public or are known to have resulted in contamination of drinking water. The NRC's impact assessment and significance determination with respect to soil and groundwater contamination are informed by the lessons learned and knowledge gained from these historical spent fuel pool and related inadvertent releases. No changes were made to the GEIS or Rule as a result of these comments.

(711-21) (711-35)

D.2.27.2 – COMMENT: One commenter stated that storage of spent fuel at away-from-reactor ISFSIs is "projected to have significant adverse long-term impacts on the groundwater, which ultimately impacts other bodies of water."

RESPONSE: The NRC disagrees with the comment. Chapter 5 of the GEIS presents the projected environmental impacts of continued away-from-reactor storage of spent fuel in an ISFSI. Sections 5.7 and 5.8 of the GEIS describes the potential impact on surface-water quality and use and groundwater quality and use, respectively, associated with construction and operation of an away-from-reactor ISFSI. To support spent fuel repackaging into new canisters under the long-term storage scenario, the NRC has assumed that a DTS would also be required. For construction and operation of the away-from-reactor ISFSI and DTS, the NRC concludes that the overall impacts on both surface-water and groundwater use and quality would be SMALL. As specifically stated in Section 5.8.2 of the GEIS, the NRC concludes that the impacts on groundwater use and quality of long-term storage of spent fuel at an away-from-reactor ISFSI

would also be SMALL. These conclusions are based on the fact that once constructed, the away-from-reactor ISFSI would be in a passive state. Routine activities would be limited to storage cask emplacement and site maintenance with very little water use. Operation of the ISFSI would result in no routine release of gaseous or liquid radiological effluents, as noted in Section 6.4.17.1 of the GEIS. The text in Section 6.4.17.1 was revised for clarity with respect to this issue. Effluents would be limited to stormwater runoff and treated sanitary wastewater during normal operations, as indicated in Sections 5.7 and 5.8 of the GEIS. In addition, the licensee of an away-from-reactor ISFSI would be required by 10 CFR 72.44(d)(2) to implement an environmental monitoring program to ensure compliance with technical specifications for effluents. No changes were made to the Rule as a result of this comment.

(377-3-2)

D.2.27.3 – COMMENT: Several commenters indicated that existing reactor and spent fuel storage operations have already impacted groundwater, and that the GEIS incorrectly concludes that impacts on surface-water quality will be SMALL. A commenter indicated that many reactor sites have groundwater contamination from routine operations, and that many of those sites are located on drinking-water aquifers. One commenter stated that the GEIS completely excludes the Plymouth-Carver Sole Source Aquifer, which is vulnerable to contamination from spent fuel storage, from its analysis of groundwater quality and use, and also noted that the leaks from the Pilgrim Nuclear Generating Station are occurring into the Plymouth-Carver Sole Source Aquifer, which supplies drinking water for individual residences and several southeastern Massachusetts towns. The commenter further stated that a fuel pool at Brookhaven National Laboratory in New York had leaked tritium into a drinking-water aquifer for 12 years. Another commenter indicated that dry casks at several facilities around the world, including the United States, have leaked into underlying water tables. One commenter indicated that nuclear storage in North Carolina and the Northwest could lead to a major problem with groundwater. One commenter identified concerns with potential impacts to natural resources associated with long-term spent fuel storage, particularly contamination of surface-water and groundwater resources, and that these impacts could be severe, long-term, and difficult to mitigate. One commenter noted that factors involved in groundwater assessments vary at each groundwater contamination incident and that site-specific assessments would have to be done to determine the real potential impacts of contamination of groundwater on use and quality. One commenter indicated that despite surface-water capacity to dilute radiological contamination migrating from contaminated groundwater sources, nuclear isotopes persist and move up the marine food chain as evidenced in marine life near the Fukushima Dai-ichi accident. Another commenter stated that the NRC's conclusion that environmental impacts to surface waterbodies is SMALL relies inappropriately on analytic assumptions. Citing Section 4.7.2 of the GEIS, one commenter asserted that the NRC's analysis of water-resource impacts from continued storage of spent fuel are unacceptable. The commenter questioned how the NRC can reach a determination that the impacts from continued storage will be SMALL based

on a comparison of the impacts of continued storage to the impacts of operations. Further, the commenter argued that the NRC's analysis relies on flawed assumptions that dry cask replacements will proceed smoothly for an infinite period.

RESPONSE: The NRC disagrees with the comments that the conclusions in the GEIS are incorrect or do not have an adequate basis and that the groundwater impacts of continued storage cannot be analyzed generically. The GEIS generically evaluates the environmental impacts of continued storage, but the environmental impact analyses presented are informed by the wide range of environmental conditions at existing reactor sites. This means that, for each of the resource areas analyzed in the GEIS, including surface water and groundwater, the NRC has reached a generic determination (SMALL, MODERATE, LARGE, or a range) that is appropriate for all sites. The assumptions used in the analysis are sufficiently conservative to bound the impacts such that variances that may occur from site to site are unlikely to result in environmental impact determinations greater than those presented in the GEIS.

While the NRC used some site-specific information to inform its analysis, the GEIS does not replace the site-specific NEPA analysis that would be conducted for individual site-specific licensing actions. The analysis in the GEIS applies to future NRC licensing actions, which will consider recent developments in science and engineering as part of the license application review process. Regarding general concerns for impacts on water use and quality from continued storage, Section 4.7 of the GEIS describes the potential environmental impacts on surface-water quality and use from continued storage. As discussed in Section 4.7.1.1 of the GEIS, cooling-water demand would be significantly reduced after reactor operations have ceased and would result in undetectable or very minor impacts on surface-water consumptive use from the continued storage of spent fuel in pools.

The GEIS specifically addresses the potential for surface-water contamination from continued storage in spent fuel pools. As described in Section 4.7.1.1 and detailed in Section E.2.2.2, both of which have been revised in the GEIS, the NRC concludes that the resulting radiological impacts of any spent fuel pool leak release to offsite receiving waters would be comparable to levels observed with permitted cooling and service-water effluent discharges from operating nuclear power plants. The NRC's assessment is based on known reactor operational data and spent fuel pool releases to date.

Spent fuel storage in ISFSIs, as described in Section 4.7.1.2 of the GEIS, does not require the consumption of water because ISFSIs are passive, air-cooled storage systems. Section 4.7.1.3 of the GEIS concludes that because short-term storage of spent fuel would use less surface water and have fewer activities that could affect surface-water quality than an operating reactor, which was previously determined to have a SMALL impact, the impacts on surface-water quality and consumptive use during the short-term storage timeframe would also be SMALL. For the long-term timeframe, the GEIS also concludes that the potential consumptive-use impacts from continued ISFSI operations would be minimal, as projected activities involving replacement

facility construction and operation would involve amounts of water that are a small fraction of water use during reactor operations.

With respect to spent fuel pool leaks impacting groundwater, continued storage in spent fuel pools could result in radiological impacts on groundwater as described in Sections 4.8.1.1 and E.2.2.1 of the GEIS. However, the NRC believes that it is unlikely that a future leak during the short-term timeframe would remain undetected for a significant period of time and impact offsite groundwater receptors. Several factors inform this assessment as summarized in Section 4.8.1.1. First, and as detailed in Sections E.1.1 and E.2.1.1 of the GEIS, spent fuel pool design (e.g., stainless-steel liners and leakage-collection systems) and operational controls (e.g., monitoring and surveillance of spent fuel pool water levels) make it unlikely that a leak will remain undetected for a significant period of time and impact offsite groundwater receptors. Second, the hydrologic characteristics associated with typical nuclear power plant sites (see Section E.2.1.3 of the GEIS) act to impede the offsite migration of future spent fuel pool leakage. Third, licensees at current and future spent fuel pool sites are required to have routine REMPs in place to detect subsurface contamination, including contamination in groundwater. Any detection of contamination would likely result in additional monitoring and subsurface characterization.

In addition, licensees are required by 10 CFR 20.1501(a) to conduct subsurface surveys to identify and characterize contamination. As described in Section E.1.2, licensees have implemented groundwater monitoring programs in accordance with the industry's voluntary industry-wide initiative (NEI 2007), which satisfies the intent of 10 CFR 20.1501(a). Performing onsite groundwater monitoring throughout the short-term timeframe, in conjunction with other onsite and offsite radiological monitoring required of licensees, will serve as an important mechanism to detect radiological contamination in the event of a spent fuel pool leak, and should facilitate timely leak-response actions. Should the hydrogeologic characteristics of the site change during the short-term timeframe, licensees would need to update onsite and offsite monitoring programs, as necessary, to ensure any potential exposure pathways are being appropriately monitored. The NRC's impact assessment and significance determination with respect to soil and groundwater contamination are informed by the lessons learned and knowledge gained from historical spent fuel pool and related inadvertent releases.

Table E-4, in Appendix E of the GEIS, lists suspected and confirmed reactor spent fuel pool leaks. It provides a representative baseline for the NRC's analysis of future impacts from leaks. Table E-4 has been updated to include additional leak examples. However, as further detailed in Section D.2.26.3 of this appendix, the Brookhaven National Laboratory facility to which the comment refers is a DOE-owned High Flux Beam Reactor research facility that was not licensed by the NRC and does not store commercial spent fuel. As this is neither a commercial nuclear power reactor nor an away-from-reactor ISFSI, its activities are not within the scope of the GEIS or Rule and it has not been included in Appendix E as a representative leak example.

Table E-5, in Appendix E of the GEIS, lists the known maximum tritium contamination detected onsite and at offsite locations from the identified spent fuel pool leakage events. As noted in Section E.3 of the GEIS, none of the identified spent fuel pool leakage events listed in Table E-5 are known to have resulted in the contamination of drinking water. The nature and extent of leaks at Pilgrim Nuclear Generating Site are further described in Section D.2.40.2 of this appendix.

The NRC also disagrees with the comments regarding the NRC's conclusions on surface and groundwater resources impacts of long-term and indefinite storage at ISFSIs and the assumptions made. As noted in Section 4.7.1.2 of the GEIS, ISFSIs function as passive systems during operations, do not require the consumption of water, and generate minimal effluents. For example, during its evaluation of the application to renew the Calvert Cliffs ISFSI license the NRC determined that both direct and indirect impacts on water resources would be SMALL. This analysis included an evaluation of cask-loading operations and stormwater runoff carrying grease, oil, and spills from operating equipment that support the ISFSI. For long-term storage, NRC notes that ISFSI operating impacts would be similar to those for short-term continued storage. However, the GEIS assumes that ISFSI pads, spent fuel canisters, and casks would need to be replaced during the long-term timeframe, and DTS facilities would need to be constructed and then replaced at least every 100 years. Appendix B of the GEIS describes the design of storage casks and national and international experience that supports the assumptions about longevity of dry storage casks. Current information supports low degradation rates for dry cask storage systems. No changes were made to the Rule as a result of these comments.

(23-7) (79-1) (326-45-3) (560-1) (622-2-12) (622-2-14) (622-2-15) (622-2-7) (622-2-8) (820-3) (820-9) (919-7-10) (977-1) (984-1)

D.2.27.4 – COMMENT: A commenter disagreed with a statement in the GEIS that localized spills of hazardous substances are relatively easy to remediate, except for substances like diesel fuel. The commenter stated that, in New Jersey, groundwater contamination by hydrocarbons has typically been the easiest to remediate, while other groundwater contaminants have proven more difficult to address.

RESPONSE: The NRC agrees with the comment. The cited sentence in the draft GEIS referred to surface spills, not subsurface or groundwater contamination. The text in Section 4.8.1.1 of the GEIS has been revised for clarity as follows: "Except for a few substances (e.g., diesel fuel), surface spills of hazardous substances that might lead to groundwater contamination are often localized, quickly detected, and relatively easy to remediate (NRC 2002b)" (NRC 2002a). No changes were made to the Rule as a result of this comment.

(920-35)

D.2.27.5 – COMMENT: Commenters expressed concerns with the ultimate fate and transport of contaminated groundwater. One commenter stated that consideration of surface-water impacts from plant discharges should consider migration and uptake of contaminants in biota, not just the dilution that occurs in large nearby surface waterbodies. The commenter also stated that where surface waterbodies are not large, they would be more vulnerable to the effects of drought; that the GEIS acknowledges uncertainties related to rates of leakage from spent fuel pools, direction and rate of groundwater flow, and distance to offsite waters and that it is not possible to predict future risks with any confidence if all of nature's pathways are not known. Another commenter indicated that it is only a matter of time before offsite migration of groundwater contamination occurs and that to dismiss offsite migration is a failure in the analysis. The commenter further noted that scientific analysis requires the information for each leaked isotope to be plotted into a future timeline based on all known factors that might impact the migration.

RESPONSE: The NRC disagrees with the comments. The NRC's analyses in the GEIS do consider the potential for the migration of contaminants to surface water and groundwater from continued storage, including the migration, uptake, and accumulation of radionuclides in biota.

Sections 4.7 and 4.8 of the GEIS describe the potential impacts on surface-water quality and use and groundwater quality and use, respectively, associated with the continued storage of spent fuel in spent fuel pools and at-reactor ISFSIs. Specific to the potential for surface-water quality impacts from spent fuel pool leaks and concerns for dilution potential, the NRC has reviewed and revised its analysis, which is described in Section 4.7.1.1 and detailed in Section E.2.2.2. The GEIS concludes that the impact of spent fuel pool leaks on surface water remains SMALL. This finding is based on the determination that the radiological impact of a spent fuel pool release to offsite receiving waters would be comparable to levels observed with permitted cooling and service-water effluent discharges from operating nuclear power plants. The NRC's assessment is based on known reactor operational data on spent fuel pool releases to date. See Sections D.2.27.12 and D.2.40.9 of this appendix for additional information on this issue.

Further, Sections 4.9 and 4.10 of the GEIS address the issue of biological uptake of radionuclides introduced into the environment. These sections have been expanded to describe the NRC's review process for assessing the impacts related to the exposure of biota to radionuclides. As detailed in Section D.2.28.1 of this appendix, licensing reviews performed by the NRC have included an analysis of impacts from the operation of spent fuel pools. These assessments determined that exposure of aquatic and terrestrial organisms to radionuclides near nuclear power plants was sufficiently less than the DOE's and the IAEA's guidelines for radiation dose rates from environmental sources. As a result, the GEIS concludes that the potential impacts from radiological doses to biota would be SMALL during continued storage.

With respect to contaminant migration and offsite groundwater-quality impacts, spent fuel pool leakage could result in radiological impacts on groundwater as described in Sections 4.8.1.1

and E.2.2.1 of this GEIS. Section D.2.27.3 of this appendix for further details that a variety of factors act to prevent and minimize the effects of a spent fuel pool leak to the environment. These include spent fuel pool design (e.g., stainless-steel liners and leakage-collection systems) and operational controls (e.g., monitoring and surveillance of spent fuel pool water levels) that make it unlikely that leaked spent fuel pool water will migrate to the environment, or remain undetected long enough for the leak to adversely affect the offsite groundwater receptors. In addition, the hydrologic characteristics of a typical nuclear power plant site (see Section E.2.1.3 of the GEIS) act to impede the offsite migration of spent fuel pool leakage. In addition, groundwater monitoring programs implemented as part of the Groundwater Protection Initiative, in conjunction with other onsite and offsite radiological monitoring required of licensees, will serve as an important mechanism to detect radiological contamination in the event of a spent fuel pool leak, and will facilitate timely detection of a leak soon enough to prevent offsite migration at levels that could exceed Federal and State dose and drinking-water requirements.

The GEIS further addresses the ultimate fate of potential contaminants and consideration of environmental pathways. Specifically, as noted in Section 4.3 of the GEIS, with respect to environmental justice and consideration for contaminant uptake, all NRC licensees are required to assess the impact of facility operations on the environment through a REMP. In short, a licensee's REMP provides a mechanism for determining the levels of radioactivity in the environment, as further described in Section D.2.26.4 of this appendix.

The NRC disagrees that the analysis of spent fuel pool leaks in the GEIS needs to include a time-step plot of contamination concentrations. However, the NRC's analysis of potential impacts on groundwater, as detailed in Sections 4.8.1.1 and E.2.2.1, is informed in part by operational data from historical spent fuel pool leaks. The NRC has assumed for the purposes of analysis in the GEIS that the potential for spent fuel pool leaks would be limited to the short-term timeframe. By the end of that timeframe, the NRC assumes that all spent fuel will have been moved from spent fuel pools to dry cask storage. No changes were made to the GEIS or Rules as a result of these comments.

(805-9) (823-41)

D.2.27.6 – COMMENT: A commenter stated that NRC should consider off-normal operating conditions in its assessment in Section 4.7.1 of the GEIS that direct and indirect quality impacts to surface waterbodies would be SMALL.

RESPONSE: The NRC disagrees with the comment. The NRC describes the environmental impacts of postulated accidents involving the continued storage of spent fuel, including those associated with abnormal operating conditions initiated by natural phenomena, in Section 4.18 of the GEIS. As detailed in Section 4.18, safety features in the design, construction, and operation of nuclear power plants and ISFSIs, which are the first line of defense, are intended to

prevent the release of radioactive materials. Additional measures are designed to mitigate the consequences of failures in the first line of defense. No changes were made to the GEIS or Rule as a result of this comment.

(919-7-7)

D.2.27.7 – COMMENT: A commenter stated that leakage from some sites may reach and contaminate groundwater more quickly due to unique vulnerabilities in the environment (e.g., very high water tables, proximity to streams and lakes, proximity to groundwater, vulnerability to flooding, and risks of tsunamis and high waves). In addition, the commenter stated that a good scientific analysis would attempt to quantify probability ranges for each type of significant impact with differing characteristics, including drinking-water sources for humans and wildlife.

RESPONSE: The NRC agrees with the comment in part and disagrees in part. The NRC agrees that hydrologic conditions at a diversity of sites should inform the analysis in the GEIS. The NRC disagrees that its environmental impact analysis, including for groundwater, should use probability ranges in describing environmental impacts. NEPA does not require that agencies assign probability ranges to environmental impacts in their EISs. CEQ and NRC regulations for implementing NEPA (40 CFR 1508.27) do require that uncertainty be considered in evaluating the significance of potential environmental impacts.

The GEIS generically evaluates the environmental impacts of continued storage, but the environmental impact analyses presented are informed by the wide range of environmental conditions at existing reactor sites. This means that, for each of the resource areas analyzed in the GEIS, including surface water and groundwater, the NRC has reached a generic determination (SMALL, MODERATE, LARGE, or a range) that is appropriate for all sites. The assumptions used in the analysis are sufficiently conservative to bound the impacts such that variances that may occur from site to site are unlikely to result in environmental impact determinations greater than those presented in the GEIS.

In developing the GEIS, the NRC considered characteristics of all existing reactor and ISFSI sites, and the NRC considered whether site-specific factors could result in different impact levels at different sites. Overall, in several resource areas in the long-term and indefinite timeframes, the NRC acknowledges that future site-specific factors could result in varying impact levels, and so the NRC assigned a range of impacts to address the uncertainty. The presence of uncertainty does not invalidate nor preclude the development of reasonable determinations of potential environmental impacts in the GEIS, including for groundwater. Section 1.8.3 of the GEIS presents assumptions used for evaluating environmental impacts that provided appropriate and reasonable bounds for projecting future conditions and activities related to continued storage.

Nevertheless, as discussed in Section 4.8.1.1 of the GEIS, the NRC concludes that the impacts on groundwater quality associated with continued storage would be SMALL for all timeframes. Specific to spent fuel pool leakage, continued storage could result in radiological impacts on groundwater as described in Sections 4.8.1.1 and E.2.2.1 of the GEIS. However, the NRC believes that it is unlikely that a future leak during the short-term timeframe would remain undetected for a significant period of time and impact offsite groundwater receptors, as further detailed in Section D.2.27.3 of this appendix.

Regarding the impacts that leaks could have on humans and the environment as a whole, all NRC licensees are required to assess the impact of facility operations on the environment through a REMP, as noted in Section 4.3 of the GEIS. REMPs assess the effects of site operations on the environment that could affect special pathway receptors. Special pathways take into account the levels of contamination in native vegetation, crops, soils and sediments, surface water, fish, and game animals on or near power plant sites to assess the risk of radiological exposure through (1) subsistence consumption of fish, native vegetation, surface water, sediment, and local produce; (2) the absorption of contaminants in sediments through the skin; and (3) the inhalation of airborne particulate matter. REMPs provide a mechanism for determining the levels of radioactivity in the environment. REMP implementation allows licensees and regulators to ensure that any accumulation of radionuclides released into the environment will not become significant. After reactor operations cease at a site, a REMP would still be required to consider the potential sources of radiation and radioactivity that may be released from a spent fuel pool or at-reactor ISFSIs in accordance with NRC regulations at 10 CFR 20.1501; 10 CFR 50, Appendix A, Section VI; and 10 CFR 72.44(d).

Finally, the potential environmental consequences of postulated accidents associated with natural phenomena (e.g., flooding or severe weather events) are discussed in Section 4.18 of the GEIS. No changes were made to the GEIS or Rule as a result of this comment.

(823-32)

D.2.27.8 – COMMENT: In comments on page 4-24, lines 3 and 16-17, of the draft GEIS, a commenter stated that the NRC should have considered whether dust or runoff created during ISFSI demolition is radiologically contaminated.

RESPONSE: The NRC disagrees with the comments. Section 4.7 of the GEIS presents the NRC's analysis of the potential environmental impacts on surface-water quality and use caused by the continued storage of spent fuel. These impacts have been assessed for normal operations. As described in Section 4.7.2, continued storage would necessitate the demolition, decontamination, and replacement of storage and support facilities over the long term. In addition to the use of water sprays for dust abatement during demolition and replacement facility construction, potential environmental impacts from onsite activities would be expected to be limited to the infiltration of stormwater runoff carrying grease and oil and spills from operating equipment that supports the dry cask storage facility, as discussed in Section 4.8.1.2. In all

cases, and as referenced in Section 3.7 and Appendix B of the GEIS, all facility licensees are required by 10 CFR 20.1406 to conduct facility operations to minimize the introduction of residual radioactivity into the site, including the subsurface, in accordance with the NRC's existing radiation protection requirements under 10 CFR Part 20, Subpart B. Licensees are also required to perform radiological surveys in accordance with 10 CFR 20.1501(a). These regulations are designed to help safeguard against the inadvertent contamination of environmental media, including soils, surface water, and groundwater, by requiring licensees to establish operational practices to minimize or eliminate any environmental impacts as part of decommissioning planning. No changes were made to the GEIS or Rule as a result of these comments.

(919-7-8) (919-7-9)

D.2.27.9 – COMMENT: Regarding Section 4.7.1 of the draft GEIS, a commenter asked NRC to explain why consumptive water losses are higher at sites using mechanical draft cooling towers than at sites using once-through cooling systems.

RESPONSE: For the purposes of characterizing a generic single-unit nuclear power plant site, where continued storage will occur in spent fuel pools and at-reactor ISFSIs, Section 2.1.1.1 of the GEIS generally describes cooling towers and their use at operating nuclear power plants. The NRC offers the following additional information for the commenter's information.

There are two major types of cooling systems for operating nuclear power plants: once-through cooling and closed-cycle cooling. In a once-through cooling system, circulating water for condenser cooling is obtained from a nearby source of water (e.g., a lake or river) passed through the plant's condenser system, and returned at a higher temperature to the same waterbody. The waste heat is dissipated to the atmosphere mainly by evaporation from the receiving waterbody itself; little water is directly consumed or lost in the process. In a closed-cycle system, cooling water is recirculated through the condenser after the waste heat is removed by dissipation to the atmosphere typically by circulating the water through cooling towers. Recirculating cooling systems consist of natural draft or mechanical draft cooling towers, cooling ponds, lakes, reservoirs, or canals, or some combination. As the predominant means of cooling in closed-cycle systems is evaporation, much of the water withdrawn from a surface water source for cooling is consumed (lost to the atmosphere primarily due to evaporation) and is not returned to the water source. Simply put, for once-through cooling systems, the consumption rate is much less than for closed-cycle cooling systems because water is returned directly to the surface waterbody and undergoes less evaporation than in a cooling tower. However, the withdrawal rate from a surface waterbody for once-through cooling systems is much greater. Several nuclear plants also use a combination of once-through and closed-cycle cooling elements that may be used in different configurations, especially on a seasonal basis. No changes were made to the GEIS or Rule as a result of this comment.

(919-7-4)

D.2.27.10 – COMMENT: Several commenters raised issues with the analysis in the GEIS of cumulative impacts to groundwater. One commenter stated that Section 6.4.8 of the GEIS, which addresses Cumulative Impacts to Groundwater Quality and Use, violates NEPA by failing to mention or integrate information about existing groundwater contamination at 42 sites that have had significant leaks or spills involving tritium. The commenter also asserted that the analysis fails to assess the combined impacts of future spent fuel pool leaks and leaks of radioactive water from other plant systems that may increase the levels of groundwater contamination at reactor sites around the country. Another commenter noted that although the NRC states that there is likely little or no hydraulic connection between shallow aquifers and deeper regional groundwater flow systems due to impermeable shales or massive unjointed carbonate strata, the NRC has not addressed the interplay between fracking and the new risks to irradiated nuclear fuel storage this activity represents.

RESPONSE: The NRC disagrees with the comments that the cumulative impacts analysis for groundwater is flawed and otherwise fails to address site-specific aspects of past leaks at operating nuclear power plants.

The NRC's generic cumulative impacts analysis for groundwater as presented in Section 6.4.8 of the GEIS includes the incremental impact of the continued storage of spent fuel at existing reactor sites when added to the impacts stemming from other past, present, and reasonably foreseeable future actions at existing reactor sites, in accordance with NEPA and with CEQ and NRC regulations (40 CFR Part 1500 et seq. and 10 CFR Part 51, respectively), which implement NEPA. Integral to the cumulative impacts analysis presented in Section 6.4.8 of the GEIS for groundwater quality and use is the analysis presented in Section 4.8 of the GEIS, which evaluates the potential impacts on groundwater use and quality of continued storage of spent fuel in pools and at-reactor ISFSIs. Section 6.4.8 of the GEIS states that the NRC's analysis presented in Section 4.8 concludes that the impacts on groundwater quality associated with continued storage of spent fuel in fuel pools during the short-term timeframe and in at-reactor ISFSIs over all timeframes would be SMALL. Section 4.8.1.1 discusses historic spent fuel pool leaks to groundwater, with Appendix E cited for more detailed information. For example, Table E-5 in Appendix E lists the maximum tritium contamination detected onsite and at offsite locations from identified spent fuel pool leak events. This information is considered and used in the cumulative impacts analysis for groundwater presented in the GEIS.

Further, as stated in Section 6.4.8.1 of the GEIS, and based in part on the License Renewal GEIS (NRC 2013m), the NRC's generic analysis and cumulative impacts conclusion considers groundwater-quality degradation that has occurred beneath individual nuclear power plant sites due to spills and leaks from spent fuel pools and other inadvertent releases. The License Renewal GEIS generically evaluates the environmental impacts of continued operations of nuclear power plants across the United States. The License Renewal GEIS incorporates information gained from previous site-specific operating reactor license renewal environmental

reviews performed by the NRC. Section 6.4.8.1 of the GEIS also references several site-specific environmental reviews performed by the NRC and considered in assessing other trends and site activities bearing on cumulative impacts on the quality and quantity of groundwater. These include the site-specific supplements to the License Renewal GEIS prepared for the Point Beach Nuclear Plant, Crystal River Unit 3, and Columbia Generating Station.

The NRC also disagrees with the comments that the GEIS needs to address hydraulic fracturing (fracking) with respect to continued storage. Section 3.7 of the GEIS broadly characterizes the groundwater systems at existing nuclear power plant sites with respect to continued storage in spent fuel pools and ISFSIs. Nothing in the comments regarding fracking challenges the NRC's generic characterization of the groundwater systems described in Section 3.7.

Activities associated with drilling and hydraulic fracturing are not regulated by the NRC and are outside the scope of this GEIS. The underground injection of the wastewater produced as a byproduct of the hydraulic fracturing process is regulated by the EPA via Underground Injection Control regulations. The discharge of wastewater to surface water is regulated under the National Pollutant Discharge Elimination System (NPDES) permit regulations pursuant to the Clean Water Act. These regulations, along with permitting of hydraulic fracturing operations, are generally administered by the States.

Regardless, the safe operation of nuclear power plants and their spent fuel pools and at-reactor ISFSIs is dealt with on an ongoing basis as a part of the current licenses. As described in Section B.3.3.4 of the GEIS, safety issues and concerns are addressed by the NRC on an ongoing basis at every nuclear power plant and ISFSI. The NRC will continue its regulatory control and oversight of spent fuel storage at both operating and decommissioned reactor sites. If the NRC were to find noncompliance with or otherwise identify a concern with the safe storage of the spent fuel, the NRC would evaluate the issue and take whatever action or change in its regulatory program necessary to protect the public health and safety. No changes were made to the GEIS or Rule as a result of these comments.

(710-22) (919-5-15)

D.2.27.11 – COMMENT: A commenter stated that NRC's statements in Section 4.8.1.1 of the GEIS paint an overly optimistic picture of licensee responses to hazardous material spills, rather than a conservative, protective, precautionary approach to risks. The commenter pointed to spills at Braidwood and Fermi 1 as reasons to doubt the NRC's optimism.

RESPONSE: The NRC disagrees with the comment. The cited text in the GEIS refers specifically to surface spills, not subsurface or groundwater contamination. The text in Section 4.8.1.1 of the GEIS has been revised for clarity as follows: "Except for a few substances (e.g., diesel fuel), surface spills of hazardous substances that might lead to groundwater

contamination are often localized, quickly detected, and relatively easy to remediate (NRC 2002b)" (NRC 2002a).

In the GEIS, the NRC has based its assessment and impacts determinations on the lessons learned and knowledge gained from previous releases and their associated impacts, as well as the regulatory environment that is in place. The NRC has no statutory or regulatory authority over matters that fall under the Clean Water Act, including the NPDES permit program; Safe Drinking Water Act; and the Resource Conservation and Recovery Act, as may be delegated to the states. The NRC properly defers to the EPA or delegated State agencies for the regulation of nonradiological hazardous substances, as referenced in Section 4.8.1.1 of the GEIS.

Regardless, every NRC licensee must comply with all health, safety, and environmental requirements contained within its license as well as with all other Federal, State, and local requirements for continued operation. No changes were made to the Rule as a result of this comment.

(919-7-13)

D.2.27.12 – COMMENT: One commenter stated that the GEIS should take into account that decisions about water intake and outflow to surface waters is a matter for States under the NPDES. The commenter stated that States can curtail reactor operations or grant permit exemptions for thermal discharge into State waters during severe drought. These decisions can affect river temperatures, chemical and biological activity, evaporation rates, recharge, and other factors that could impact the amount of dilution available for radiological discharges. Another commenter suggested several specific changes to Section 3.6 of the GEIS, in particular the discussion on the NPDES.

RESPONSE: The NRC agrees in part and disagrees in part with the comment. The NRC agrees that it has no statutory or regulatory authority over discharge permits under the Clean Water Act. The NRC reviews an operating nuclear power plant's NPDES permit as part of its review of an application for license renewal; however, such reviews are limited to an evaluation of the potential environmental impacts of license renewal for the purposes of NEPA. In addition, the NRC conducts environmental reviews for initial licenses, license renewal, and proposed license amendments for operating nuclear power plants. In all cases, licensees must comply with all applicable laws and regulations, including the Clean Water Act requirement to obtain an NPDES permit prior to discharging effluents offsite. For example, some of these environmental reviews occur when a licensee proposes a significant change in the types or significant increase in the amounts of any effluents that may be released offsite. These proposals separately require review and possible modification of the plant's NPDES permit by the permit-issuing authority, including review of possible health effects.

As relevant here, the GEIS generically evaluates the environmental impacts of continued storage, but the environmental impact analyses presented are informed by the wide range of environmental conditions at existing reactor sites. Section 3.6 of the GEIS characterizes the surface-water systems and governing regulatory environment at existing nuclear power plant sites as may be relevant to the continued onsite storage of spent fuel in spent fuel pools and at-reactor ISFSIs. Section 4.7 of the GEIS presents NRC's analysis of the potential environmental impacts on surface-water quality and use caused by the continued onsite storage of spent fuel, which has been revised for clarity in the GEIS.

As noted in Section 4.7.1.1, once reactor operations have ceased, cooling-water demand for continued onsite storage of spent fuel in spent fuel pools and at-reactor ISFSIs would be significantly reduced, so surface-water withdrawals for cooling would not substantially contribute to any reductions in the dilution potential of offsite receiving surface waters. Thus, even assuming a continuous and unabated spent fuel pool leak, the GEIS analysis of a leak on receiving water quality sufficiently bounds the variability in surface-water flow at storage sites and limits that a state may impose on surface-water withdrawals and effluent discharge. The NRC's assessment is based on known reactor operational data on spent fuel pool releases to date. As described in Section 4.7.1.1 and detailed in Section E.2.2.2, which have been revised in the final GEIS, the NRC concludes that the resulting radiological impact of any spent fuel pool leak release to offsite receiving waters would be comparable to levels observed with permitted cooling and service-water effluent discharges from operating nuclear power plants. No changes were made to the Rule as a result of this comment.

(716-13)

D.2.27.13 – COMMENT: A commenter stated that storage should not occur at sites where known natural resources may negatively affect the ability of the disposal site to meet the performance objectives. The commenter further noted that a prospective site must be well-drained and free of flooding or frequent ponding and that the disposal site should be located far enough above the water table to prevent groundwater intrusion. The commenter expressed particular concerns for the Perry Nuclear Power Plant and Davis-Besse Nuclear Power Station sites, which drain to Lake Erie. The commenter referred to a 1992 occurrence report, claiming it describes radioactive contamination in a stream near the Perry Nuclear Power Plant site that went undetected for three years.

RESPONSE: The NRC disagrees with the comments. The GEIS evaluates the environmental impacts of continued storage of spent fuel on a generic basis; the environmental impact analyses in the GEIS are informed by the wide range of environmental conditions at existing reactor sites. Sections 4.7 and 4.8 of the GEIS describe the potential impacts of continued storage on surface-water quality and use and groundwater quality and use, respectively. The potential environmental consequences of postulated accidents associated with natural phenomena (e.g., flooding) are discussed in Section 4.18 of the GEIS.

Further, the analysis in the GEIS applies to future NRC licensing actions. Future licensing actions will consider recent developments in science and engineering as part of the license application review process. As described further below, for existing facilities that are not the subject of an ongoing relicensing review, the NRC has a separate process that allows it to consider the development of new knowledge in various disciplines, including surface water and groundwater hydrology. In addition, as part of an initial site-specific licensing or relicensing action, the NRC considers site-specific hydrologic conditions for each nuclear power plant and associated ISFSI. This is the case for the ongoing license renewal environmental review for the Davis-Besse Nuclear Power Station as documented in Supplement 52 to the License Renewal GEIS, issued in February 2014 (NRC 2014c).

The issues raised by the comment are addressed by license applicants and the NRC at the initial licensing stage. All currently operating U.S. nuclear power plants were sited using geologic and seismic criteria set forth in 10 CFR Part 100; these facilities were designed and constructed in accordance with 10 CFR Part 50. The regulations require that plant structures, systems, and components important to safety be designed to withstand the effects of natural phenomena, including flooding, without loss of capability to perform safety functions. Site-specific design bases for flood protection are prescribed by a nuclear power plant's Final Safety Analysis Report or Updated Final Safety Analysis Report and by applicable technical specifications. Further, nuclear power plants licensed after January 10, 1997, are subject to the more rigorous geologic and hydrologic site-acceptability and design criteria established in 10 CFR 100.20 and 100.23, and 10 CFR Part 50, Appendix S.

As referenced above, the NRC has a process in place to address the changing state of knowledge in various scientific disciplines. When new information about natural phenomena that could affect the safety of operating nuclear power plants becomes available (e.g., information related to seismic or flooding hazards), the NRC evaluates the new information, through the appropriate regulatory program (e.g., the reactor oversight process or program) to determine if any changes are needed at these plants. The NRC does not wait until a specific rulemaking action or specific licensing action is under consideration. For example, the NRC took regulatory action after the March 2011 earthquake and tsunami at the Fukushima Dai-ichi nuclear power plant. As described in Section 2.1.2.1 of the GEIS, the NRC issued multiple orders and a request for information to all of its nuclear power plant licensees on March 12, 2012. These orders included a formal request to all licensees for information to assist the NRC in reevaluating seismic as well as flooding hazards at operating reactor sites. This process is ongoing and the NRC will use the information collected to determine whether to update the design basis and systems, structures, and components important to safety, including spent fuel pools. Section 4.18 and Appendix F of the GEIS provide further details regarding the NRC's orders and requests for information in response to the Fukushima events.

In addition, as part of the aforementioned reactor oversight process, the NRC conducts individual plant inspections to ensure each nuclear power plant complies with NRC regulations on radioactive discharges (routine and inadvertent) and is appropriately monitoring the environment for radioactivity. The inspection looks at the potential impacts from radioactive effluent releases to ensure those releases are within the dose limits to members of the public and that radioactive material from the plant is not building up in the environment beyond what was evaluated at the time the plant was originally licensed. The inspection also reviews each plant's groundwater protection program to ensure it is effectively monitoring the groundwater that would most likely receive any radioactive liquid from a leaking pipe or component. It is through the inspection process that the NRC ensures continuous protection of the public from radioactive effluents. No changes were made to the GEIS or Rule as a result of these comments.

(819-17) (819-18) (819-19)

D.2.27.14 – COMMENT: A commenter disagreed with the assessment in the GEIS that the impacts of continued storage on groundwater use and quality would be SMALL and stated that it is not possible to assess the impacts on groundwater during continued storage without using any up-to-date data along with current geologic interpretations of the local geology and groundwater evaluations. As an example, the commenter asserted that groundwater usage around the Oyster Creek Nuclear Generating Station has vastly increased over time, which has contributed to a change in the flow of groundwater in New Jersey.

RESPONSE: The NRC disagrees with the comment. The analysis in the GEIS applies to future NRC licensing actions. Future licensing actions will consider recent developments in science and engineering as part of the license application review process. For existing facilities that are not the subject of an ongoing relicensing review, the NRC has a separate process that allows it to consider the development of new knowledge in various disciplines, including geology, hydrogeology, and water use. For the GEIS, the NRC based its analysis on a reasoned and accurate review of currently available information, consistent with the requirements of NEPA. The NRC response to comments regarding the need to consider changes in groundwater usage near nuclear power plants in New Jersey, including Oyster Creek Nuclear Generating Station, is included in Section D.2.40.10 of this appendix. No changes were made to the GEIS or Rule as a result of this comment.

(920-36)

D.2.27.15 – COMMENT: One commenter noted that changes in geologic interpretations affect how a groundwater system may be interpreted and that modern geologic mapping completed since the 1980s can produce a better understanding of the subsurface than earlier geologic and groundwater reports, including hydraulic communication between shallow and deeper groundwater units. The commenter noted that modern demographics and groundwater use

should be considered when assessing the impacts to offsite public wells. The commenter described the unexpected discovery of tritium in deep aquifers at the Oyster Creek Nuclear Generating Station and the Salem Nuclear Power Plant in New Jersey as examples of how early geology and groundwater reports did not reflect either the actual groundwater flow systems at these plants or the potential for changing demographics (i.e., higher populations and increased groundwater use). The commenter also indicated that, although it would not alter the ultimate conclusions of the GEIS with regard to impact determinations, the NRC should describe how nuclear power plant construction and operation can create downward pathways through confining layers to deeper aquifers.

RESPONSE: The NRC disagrees with the comments. The GEIS generically evaluates the environmental impacts of continued storage, but the environmental impact analyses presented are informed by the wide range of environmental conditions and operating experience at existing reactor sites. Sections 4.7 and 4.8 of the GEIS describe the potential impacts on surface-water quality and use and groundwater quality and use, respectively, associated with the continued storage of spent fuel in spent fuel pools and at-reactor ISFSIs.

Continued storage in spent fuel pools could result in radiological impacts on groundwater as described in Sections 4.8.1.1 and E.2.2.1 of the GEIS. However, the NRC believes that it is unlikely that a future leak during the short-term timeframe would remain undetected for a significant period of time and impact offsite groundwater receptors. Several factors inform this assessment, as summarized in Section 4.8.1.1 and as further detailed in Section D.2.27.3 of this appendix.

The NRC is not reconsidering prior licensing decisions as part of this rulemaking. The analysis in the GEIS applies to future NRC licensing actions. Future licensing actions will consider recent developments in science and engineering as part of the license application review process.

As part of an initial site-specific licensing or relicensing action, the NRC considers site-specific hydrologic conditions for each nuclear power plant and associated ISFSI. In the NRC's review of an application for license renewal, although the NRC's review is narrower than for the initial license, the NRC completes a review of all the potential environmental impacts of license renewal. For example, the NRC completed its license renewal environmental review for Oyster Creek Nuclear Generating Station and published the results in Supplement 28 to the License Renewal GEIS, issued in January 2007 (NRC 2007c). Likewise, the results of the NRC's environmental review for license renewal of Salem Nuclear Generating Station Units 1 and 2, were published in Supplement 45 to the License Renewal GEIS, issued in March 2011 (NRC 2011e). The conclusions reached in previous licensing actions are not being revisited in this GEIS. No changes were made to the GEIS or Rule as a result of these comments.

(920-31) (920-47) (920-6)

D.2.27.16 – COMMENT: Commenters stated concerns about the amount of water being used to cool nuclear reactors. One commenter noted that reactors need to be shut down during periods of heavy drought. Another commenter stated that the GEIS does not address water consumption issues. The commenter provided several examples of plants or events in which water consumption issues were involved, including the stress placed on the Catawba River by the Catawba Nuclear Station and McGuire Nuclear Station, the October 24, 2012 shutdown of Unit 3 at the Oconee Nuclear Station, and the proposed William States Lee III Nuclear Station on the Broad River. One commenter noted that the GEIS did not address the impacts related to the temperature of water being discharged from reactor sites, the cooling of reactors, or water usage and noted that at Dominion's North Anna Power Station, the site's outflow is 26.1°F hotter than its inflow. A commenter expressed the view that the GEIS should address water-use impacts resulting from reactor need for water. The commenter expressed specific concerns regarding the large amounts of water used in once-through cooling systems at California plants, and the scarcity of water in many parts of the United States. The commenter also noted the negative effect of climate change on river and lake levels needed to cool reactors. One commenter stated that the NRC had appropriately determined that the impacts on surface-water consumption use from continued storage of spent fuel in spent fuel pools will not be detectable or will be so minor that they would not be destabilizing. The commenter noted that water usage data from the recently shut down Crystal River Nuclear Plant Unit 3 showed water usage related to cooling in the spent fuel pool was 2,000 gpm or 0.3 percent of the total water usage during reactor operations (690,000 gpm).

RESPONSE: The NRC agrees in part and disagrees in part with the comments. The NRC disagrees with the comments that the GEIS should address reactor cooling at operating nuclear power plants. The NRC agrees with the comment stating that the impacts on surface-water consumptive use from the continued storage of spent fuel in spent fuel pools will not be detectible or be so minor that they would not be destabilizing.

The GEIS generically evaluates the environmental impacts of continued storage, not reactor operation, but the environmental impact analyses are informed by the wide range of environmental conditions at existing reactor sites. Specifically, Section 4.7 of the GEIS describes the potential environmental impacts on surface-water quality and use caused by the continued onsite storage of spent fuel. As specifically noted in Section 4.7.1.1, cooling-water demand would be significantly reduced after reactor operations have ceased, resulting in undetectable or very minor impacts on surface-water consumptive use from the continued storage of spent fuel in pools. Spent fuel storage in ISFSIs, as described in Section 4.7.1.2 of the GEIS, does not require the consumption of water as ISFSIs are passive, air-cooled storage systems.

Topics related to water use, cooling-water temperatures, and drought conditions during an operating reactor's licensed life are outside the scope of the GEIS and Rule. For initial licensing of nuclear power plants, the NRC evaluates the potential impacts of facility construction,

operation, and shutdown on surface water and groundwater use and quality in its environmental reviews. As noted in Section 1.8.1 of the GEIS, the NRC has generically evaluated the environmental impacts of continued operations of nuclear power plants in the License Renewal GEIS (NRC 2013m). In addition, as part of license renewal environmental reviews, changes in plant operating parameters or new and significant information pertinent to an evaluation of impacts are considered during preparation of plant-specific supplements to the License Renewal GEIS. Further, major changes in cooling-water system operations (e.g., those affecting a particular plant's licensing basis and triggering a license amendment) would require a separate environmental review. Similarly, changes in the thermal or chemical quality of effluents discharged to surface waters from operating nuclear power plants would separately require review and possible modification of a plant's NPDES permit by the permit-issuing authority, including review of possible environmental and health effects.

The NRC disagrees with the comments regarding the safe operations of nuclear power plants as bearing on cooling-water supplies. The scope of the GEIS and Rule is limited to the impacts of continued storage. As such, the regulatory safety oversight of operating reactors is outside the scope of the GEIS and Rule. Nevertheless, the safe operation of nuclear power plants is dealt with on an ongoing basis as a part of the current operating licenses. Safety inspections are, and will be, conducted throughout the operating life of the plant, whether during the original or renewed operating license term. If safety issues are discovered at a nuclear power plant, they are addressed immediately, and any necessary changes are incorporated into the current operating license. No changes were made to the GEIS or Rule as a result of these comments.

(30-21-6) (145-1) (246-27-3) (329-35-1) (553-9) (827-7-26) (938-8)

D.2.27.17 – COMMENT: A State commented that the NRC's assessment in Section 6.4.8 of the GEIS does not take into account site-specific groundwater impacts. The State cited the Oyster Creek Nuclear Generating Station and noted that, upon the plant shutting down to be decommissioned, groundwater pumping will stop and the local groundwater-to-surface-water flow system will change so that groundwater will flow toward pumping centers outside the plant boundary.

RESPONSE: The NRC agrees in part and disagrees in part with the comment. The NRC used site-specific groundwater factors to inform the generic analysis in the GEIS. As part of this generic analysis, the NRC evaluated a range of site-specific characteristics as part of the impacts analysis for each resource area considered. As specifically described in Section 6.4.8.1 of the GEIS, the NRC's analysis clearly acknowledges that cumulative impacts on groundwater at storage sites could occur from offsite groundwater demands, groundwater quality degradation, changes in land surface, and climate change leading to changes in groundwater flow rates and reversal in groundwater flow directions at or near the storage site. The NRC disagrees that cumulative impacts cannot be determined generically.

The NRC has determined in the GEIS that the direct and indirect environmental impacts of continued storage at reactors can be analyzed generically. This means that, for each of the resource areas analyzed in the GEIS, the NRC has reached a generic determination (SMALL, MODERATE, LARGE, or a range) that is appropriate for all sites. These impact determinations are expected to bound the impact determinations that would result from the consideration of continued storage in site-specific NEPA reviews. The GEIS evaluates the environmental impacts of continued storage, but the environmental impact analyses are informed by the wide range of environmental conditions at existing reactor sites.

Specifically, Section 4.8 of the GEIS describes the potential impact on groundwater quality and use associated with the continued storage of spent fuel in spent fuel pools and at-reactor ISFSIs. The conclusions of these impact analyses on groundwater were incorporated, by reference, into the Chapter 6 cumulative impact analyses, as presented in the GEIS.

The analyses presented in Chapter 6, as in the rest of the GEIS, provide a generic analysis that will be used to support NRC's decisions regarding requests to license or relicense a reactor site or site-specific ISFSI. The analysis in the GEIS applies to future NRC licensing actions. Future licensing actions will also consider recent developments in science and engineering as part of the license application review process. For existing facilities that are not the subject of an ongoing relicensing review, the NRC has a separate process that allows it to consider the development of new knowledge in various disciplines, including surface-water and groundwater hydrology. In addition, as part of an initial site-specific licensing or relicensing action, the NRC considers site-specific information, including hydrologic conditions, for each nuclear power plant and associated ISFSI. The NRC reviews groundwater use and quality conditions of an operating nuclear power plant as part of its review of an application for license renewal; however, this review is limited to an evaluation of the potential environmental impacts of license renewal. For example, the NRC completed its license renewal environmental review for Oyster Creek Nuclear Generating Station and published the results in Supplement 28 to the License Renewal GEIS, issued in January 2007 (NRC 2007c). The conclusions reached in previous licensing actions are not being revisited in the GEIS, and the comment did not provide any additional information that would cause the NRC to reconsider these site-specific licensing actions. No changes were made to the GEIS or Rule as a result of this comment.

(920-38)

D.2.27.18 – COMMENT: A commenter asserted that New York State Department of Environmental Conservation (DEC) regulations require that groundwater beneath the Indian Point Energy Center be suitable for potable water supply and further "…must not be impaired for use as drinking, culinary, or food processing water, notwithstanding whether the groundwater is actually used for such purposes."

RESPONSE: The NRC agrees in part with the comment and disagrees in part. In accordance with New York State DEC regulations codified under Title 6 New York Codes, Rules and Regulations Parts 701, "Classifications-Surface Waters and Groundwater" and 703, "Surface Water and Groundwater Quality Standards and Groundwater Effluent Limitations," all fresh groundwater in the State is designated as Class GA with a desired best use as a source of potable water supply. The NRC notes that Part 703.2 of DEC's regulations set forth a narrative standard that groundwaters not be impaired for their best usages. The NRC also notes that the DEC has established numeric criteria for radioactivity (i.e., gross alpha and gross beta emitters) consistent with the health-based Maximum Contaminant Levels and derived concentrations for annual dose equivalent under the Safe Drinking Water Act. Every NRC-licensed nuclear power plant must comply with all health, safety, and environmental requirements contained within its license as well as with all other Federal, State, and local requirements for continued operation. Those requirements are subject to enforcement by the relevant agencies. However, the NRC does not have the statutory or regulatory authority to enforce compliance with the Federal Safe Drinking Water Act or Clean Water Act, or State-delegated programs with respect to the setting of surface-water quality or groundwater-quality standards. However, the NRC offers the following additional information to explain the NRC's regulations and oversight for radiological groundwater issues.

The NRC provides continuous oversight of nuclear power plants through its reactor oversight process to verify that they are being operated in accordance with NRC regulations. This oversight includes having full-time NRC inspectors performing periodic safety inspections. The inspections look at the potential impacts from radioactive effluent releases to ensure those releases are within the dose limits to members of the public and that radioactive material from the plant is not building up in the environment beyond what was evaluated at the time the plant was originally licensed. It is through the inspection process that the NRC ensures continuous protection of the public from radioactive effluents. In addition, the NRC reviews groundwater use and quality conditions of an operating nuclear power plant as part of its review of an application for license renewal. For example, the NRC performed its license renewal environmental review for Indian Point Units 2 and 3 and published the results in Supplement 38 to the License Renewal GEIS, issued in December 2010 (NRC 2010b). Most recently, the NRC published a supplemental report as Volume 4 to Supplement 38 in June 2013 (NRC 2013p). The conclusions reached in previous licensing reviews are not being revisited in the GEIS, and the comment did not provide any additional information that would cause the NRC to reconsider these site-specific findings. At this time, the license renewal review for Indian Point Units 2 and 3 is ongoing. No changes were made to the GEIS or Rule as a result of this comment.

(710-5)

D.2.27.19 – COMMENT: A commenter suggested several specific changes to Section 3.6 of the GEIS, in particular the discussion on the NPDES.

RESPONSE: The NRC agrees with the comment. Section 3.6 of the GEIS was revised to incorporate the suggested text changes. No changes were made to the Rule as a result of this comment.

(915-12)

D.2.27.20 – COMMENT: One commenter stated that the permit issued under the NPDES for the Pilgrim Nuclear Generating Station is 17 years out of date, whereas Section 3.6 of the GEIS states that NPDES permit terms may not exceed 5 years. The commenter further notes that the GEIS does not address how Clean Water Act regulations are applied throughout the country at other nuclear facilities and that there does not appear to be adequate information on water usage following cessation of reactor operations that would allow for the conclusion in the GEIS that the impacts on surface-water resources are SMALL.

RESPONSE: The NRC disagrees with the comments. Topics specifically related to NPDES permit administration and compliance during an operating reactor's licensed life are outside the scope of the GEIS and Rule. The NRC has no statutory or regulatory authority over matters concerning discharge permits or compliance with the Clean Water Act. However, the NRC offers the following additional information.

The GEIS evaluates the environmental impacts of continued storage of spent fuel on a generic basis. Section 3.6 of the GEIS broadly characterizes the surface-water systems and governing regulatory environment at existing nuclear power plant sites as may be relevant to the continued onsite storage of spent fuel in spent fuel pools and at-reactor ISFSIs. The NRC reviews an operating nuclear power plant's NPDES permit as part of its review of an application for license renewal; however, this review is limited to an evaluation of the potential environmental impacts of license renewal for the purposes of NEPA. The NRC completed its license renewal environmental review for Pilgrim Nuclear Generating Station and published the results in Supplement 29 to the License Renewal GEIS, issued in July 2007 (NRC 2007d).

Section 402 of the Clean Water Act establishes the NPDES permit program that controls water pollution by regulating the discharge of pollutants into waters of the United States, including cooling-water discharge from electricity-generating plants. Section 316(b) of the Clean Water Act requires that the location, design, construction, and capacity of cooling-water intake structures reflect the best technology available for minimizing impingement and entrainment of aquatic organisms and is also regulated under the NPDES program. NPDES permit terms may not exceed 5 years, and the permit holder must reapply at least 180 days prior to the permit expiration date. Pilgrim Nuclear Generating Station's NPDES permit expired April 29, 1996. However, Entergy as the NPDES permit holder and operator of Pilgrim Nuclear Generating

Station, submitted its initial NPDES permit renewal application to the EPA, Region 1 on October 25, 1995. Because Entergy submitted a timely application for renewal of Pilgrim Nuclear Generating Station's NPDES permit, the 1994 permit remains valid and in effect until the EPA issues a new or modified NPDES permit, or decides not to do so. A valid NPDES permit is considered to be one that is either current (i.e., within its current effective date) or one that has expired but has been "administratively continued" by the permitting authority upon the timely submission of an applicant for renewal pursuant to the provisions of 40 CFR 122.6. Further, Pilgrim Nuclear Generating Station's 1994 permit remains enforceable by the EPA and the Commonwealth of Massachusetts with respect to their shared authority for administering the NPDES permit program in Massachusetts.

The NRC has adequately supported the generic impact conclusion in the GEIS with respect to water use associated with the continued storage of spent fuel in spent fuel pools and at-reactor ISFSIs. Section 4.7 of the GEIS describes the potential environmental impacts on surface-water quality and use caused by the continued onsite storage of spent fuel. As specifically noted in Section 4.7.1.1 of the GEIS, cooling-water demand would be significantly reduced after reactor operations have ceased and resulting in undetectable or very minor impacts on surface-water consumptive use from the continued storage of spent fuel in pools. Spent fuel storage in ISFSIs, as described in Section 4.7.1.2 of the GEIS, does not require the consumption of water as ISFSIs are passive, air-cooled storage systems. The NRC concludes, in part, in Section 4.7.1.3 of the GEIS that because short-term storage of spent fuel would use less surface water and have fewer activities that could affect surface-water quality than an operating reactor, which was previously determined to have a SMALL impact, the impacts on surface-water quality and consumptive use during the short-term timeframe would each be SMALL. For long-term storage, the NRC also concludes that the potential consumptive-use impacts from continued ISFSI operations would be minimal, as projected activities involving replacement facility construction and operation would involve amounts of water that are a small fraction of water use during reactor operations. No changes were made to the GEIS or Rule as a result of these comments.

(622-2-5) (622-2-6)

D.2.27.21 – COMMENT: A commenter stated that the Columbia River must be safeguarded from contamination and that existing contamination in the Columbia River and all rivers with nuclear sites must be cleaned up.

RESPONSE: The NRC agrees with the comment. The NRC agrees that public waterways like the Columbia River should be protected from radiological contamination. The potential for radiological contamination was considered in the GEIS, which evaluates the environmental impacts of continued storage. Topics related to the remediation of any contamination at existing sites during an operating reactor's licensed life are outside the scope of the GEIS and Rule. However, as noted in Section 4.3 of the GEIS with respect to environmental contamination, all NRC licensees are required to assess the impacts of facility operations on the environment

through a REMP. REMPs assess the effects of site operations on the environment that could affect special pathway receptors. Special pathways take into account the levels of contamination in native vegetation, crops, soils and sediments, surface water, fish, and game animals on or near power plant sites to assess the risk of radiological exposure through (1) subsistence consumption of fish, native vegetation, surface water, sediment, and local produce; (2) the absorption of contaminants in sediments through the skin; and (3) the inhalation of airborne particulate matter. REMPs provide a mechanism for determining the levels of radioactivity in the environment. REMP implementation allows licensees and regulators to ensure that any accumulation of radionuclides released into the environment will not become significant. After reactor operations cease at a site, a REMP would still be required to consider the potential sources of radiation and radioactivity that may be released from a spent fuel pool or at-reactor ISFSIs in accordance with NRC regulations at 10 CFR 20.1501; 10 CFR 50, Appendix A, Section VI; and 10 CFR 72.44(d). No changes were made to the GEIS or Rule as a result of this comment.

(995-1)

D.2.28 Comments Concerning Ecology

D.2.28.1 – COMMENT: Seven commenters expressed concerns about the potential effects from the exposure of aquatic and terrestrial organisms to radionuclides. One commenter referred to tests that found detectable amounts of strontium-90 in fish in the Hudson River near a power plant. Another commenter stated that, with respect to migration of spent fuel pool leaks to surface waters, the focus on meeting EPA safe drinking-water standards ignored potential impacts to aquatic ecology. This commenter asserted that the assessment of potential leaks to surface waters must consider factors that may lead to radioactive material bioaccumulation in the aquatic environment. The commenter also stated that the NRC's restricted consideration of impacts to surface waters, which contains no meaningful analysis of how spent fuel pool leaks may impact aquatic habitats and organisms, is precisely what the Court of Appeals in *New York v. NRC* deemed insufficient. Another commenter stated that the NRC must analyze the impacts of radioactive wastes over time on other important aquatic species including cephalopods, marine mammals, sea turtles, and reptiles. Four commenters expressed concerns about risks to wildlife, plants, and other biota due to prolonged exposure at and near continued storage facilities. One commenter also indicated potential loss of institutional controls could worsen the risk.

RESPONSE: The NRC agrees with these comments in part and disagrees with these comments in part. As described in Sections 4.9 and 4.10 in the GEIS, spent fuel pool and ISFSI operations can result in the exposure of aquatic and terrestrial organisms to radionuclides. These sections have been expanded to describe the NRC review process for assessing the impacts related to the exposure of biota to radionuclides. For example, the NRC reviewed the findings in the License Renewal GEIS as well as site-specific assessments that were conducted

during application reviews for operating licenses, combined licenses, and license renewals. These reviews inherently included an analysis of impacts from the operation of spent fuel pools. These assessments determined that exposure of aquatic and terrestrial organisms to radionuclides near nuclear power plants was sufficiently less than the DOE's and the IAEA's guidelines for radiation dose rates from environmental sources. Given that the License Renewal GEIS and site-specific analyses bound the effects of continued storage on aquatic and terrestrial resources and that NRC did not identify any foreseeable additional effects during continued storage, the NRC concludes in the GEIS that the potential impacts from radiological doses to biota would be SMALL during continued storage.

Topics specifically related to a specific radioactive release during an operating reactor's licensed life are outside the scope of this GEIS. However, the NRC offers the following additional information. As described in the License Renewal Supplemental EIS for Indian Point, Strontium-90 was detected in the Hudson River and fish near the Indian Point Nuclear Power Plant in 2006 (NRC 2010b). The NRC determined in the Supplemental EIS that the Strontium-90 levels in fish near the Indian Point Nuclear Power Plant (18.8 pCi/kg (0.69 Bq/kg)) were no higher than in those in fish collected from background locations across the State of New York. Additionally, the NRC concluded that residual radioactivity from atmospheric weapons tests and naturally occurring radioactivity were the predominant sources of radioactivity in the water samples collected near Indian Point in 2006. For additional information regarding environmental impacts from Strontium-90 near the Indian Point Plant, see the License Renewal Supplemental EIS for Indian Point Nuclear Generating Unit Nos. 2 and 3, NUREG–1437, Supplement 38 (NRC 2010b).

Also see Section D.2.40.4 of this appendix for a discussion of the sufficiency of the spent fuel pool leaks analysis. See Section D.2.40.7 of this appendix for a discussion of a large loss of water from the spent fuel pool. See Section D.2.27.5 of this appendix for a discussion of the ultimate fate and transport of contaminated water. For issues related to the potential loss of institutional controls, see Section D.2.19.1 of this appendix.

In response to these comments, Sections 4.9 and 4.10 of the GEIS have been revised to include an expanded discussion of exposure of aquatic and terrestrial organisms to radionuclides, including fish, cephalopods, marine mammals, sea turtles, and reptiles. No changes were made to the Rule as a result of these comments.

(246-2-6) (341-1-23) (556-3-1) (762-4) (897-5-15) (919-5-17) (919-5-18) (919-7-21)

D.2.28.2 – COMMENT: Two commenters raised issues regarding the use of operating plant impacts in the GEIS to discuss and bound the impacts to aquatic resources. One commenter asserted that impacts to aquatic ecology due to water use at a specific operating plant have not been properly assessed because the review process for the NPDES permit was based on limited and older data. Another commenter stated that some of the information about

experience with impingement and entrainment for operating a power plant cooling system was not relevant to assess the impacts of operating a cooling system for a spent fuel pool.

RESPONSE: The NRC disagrees with the comments. As described in Section 4.10 in the GEIS, the NRC reviewed the findings in the License Renewal GEIS (NRC 2013m) and site-specific assessments for new and operating reactors, which included an analysis of impacts from the operation of spent fuel pools. These analyses examined direct effects that could result from water withdrawal and discharge during operation of a spent fuel pool cooling system (e.g., impingement, entrainment, heat shock, and other effects relevant to the Waste Confidence GEIS). The License Renewal GEIS determined that impacts to aquatic resources would be SMALL for closed-cycle plants primarily based on withdrawal and discharge rates, as well as a historical review of site-specific effects at operating reactors. Given that the withdrawal and discharge rates would be smaller to operate the cooling system for a spent fuel pool as compared to a nuclear power plant, the conclusions of the License Renewal GEIS bound the impacts of continued storage in spent fuel pools on aquatic resources. Therefore, the NRC concludes that the potential environmental impacts on aquatic resources would be SMALL.

Topics specifically related to NPDES permit administration and compliance during an operating reactor's licensed life are outside the scope of this GEIS. The NRC has no statutory or regulatory authority over matters concerning discharge permits or compliance with the Clean Water Act. See Section D.2.27.20 of this appendix for a general overview of the NPDES permit program as it relates to the Pilgrim Nuclear Power Station and this GEIS. No changes were made to the GEIS or Rule as a result of these comments.

(622-3-2) (827-7-24)

D.2.28.3 – COMMENT: One commenter expressed concerns about the impacts to aquatic organisms drawn into cooling systems. The commenter stated that impacts include exposure to chemicals used to maintain cooling-water flow, radioactive materials, and heat. The commenter described the role of aquatic organisms in sequestering carbon from the global carbon cycle. The commenter expressed concern about the effect of cooling systems on global warming due to discharge of excess heat to the environment and impingement and entrainment of aquatic organisms available to sequester carbon.

RESPONSE: The NRC agrees with the comment. Section 3.9 in the GEIS describes the ecological role of aquatic organisms, including carbon sequestration or fixation, or converting carbon dioxide to organic materials via photosynthesis. Section 4.10 in the GEIS describes potential impacts to aquatic organisms, including entrainment into the cooling system, exposure to chemicals, radioactive doses to biota, and thermal stresses from discharge effluents. Sections 4.5 and 5.5 in the GEIS describe the incremental impacts from continued storage on climate change, in terms of emissions of greenhouse gases. Section 6.4.10 in the GEIS describes potential cumulative impacts of climate change on aquatic resources. Minor changes

in Section 6.4.10 were made to the GEIS based on this comment to further describe the role of aquatic organisms in sequestering carbon dioxide. No changes were made to the Rule as a result of this comment.

(410-18)

D.2.28.4 – COMMENT: A commenter stated that the NRC does not understand the extent of cumulative effects on aquatic resources at a specific nuclear power plant. The commenter listed several potential cumulative impacts that could occur (e.g., climate change, discharges from other facilities, and impingement and entrainment). The commenter also mentioned a lack of regulatory compliance and proper consultations at a specific nuclear power plant, including consultation under the Endangered Species Act and the NPDES permitting process. The commenter concluded that aquatic impacts from long-term storage of spent fuel will be "UNACCEPTABLE LARGE."

RESPONSE: The NRC agrees with the comment in part. As described by the commenter and in Section 6.4.10, impacts from climate change and other future actions identified in the cumulative impacts analysis can have substantial impacts on aquatic resource and special status species. The NRC's knowledge of the extent of those impacts includes a degree of uncertainty that generally increases with time into the future. Section 6.4.10 has been expanded to include some of the future actions identified by the commenter.

As described in Section 6.4.10, cumulative impacts on aquatic resources could be LARGE at some sites that experience many cumulative effects such as those listed by the commenter. The NRC's impact categories are defined by regulation as "SMALL," "MODERATE," or "LARGE." These categories do not include an "UNACCEPTABLE LARGE" category. Therefore, the conclusion remains "SMALL to LARGE" for cumulative impacts to aquatic resources in Section 6.4.10.

Topics specifically related to NPDES permit administration and compliance with other statutes (e.g., the Endangered Species Act) during an operating reactor's licensed life are outside the scope of this GEIS. In addition, the NRC has no statutory or regulatory authority over matters concerning discharge permits or compliance with the Clean Water Act. However, Section D.2.28.7 discusses the Endangered Species Act of 1973, as amended (ESA) Section 7 consultations related to the Pilgrim Nuclear Power Station and this GEIS. Section D.2.27.20 provides a general overview of the NPDES permit program as it relates to the Pilgrim Nuclear Power Station and this GEIS.

Section 6.4.10 was expanded to describe the cumulative impacts mentioned in this comment. In addition, Chapter 6 was updated to further describe uncertainty related to reasonably

foreseeable future action and how uncertainty increases with time into the future. No changes were made to the Rule as a result of this comment.

(622-3-5)

D.2.28.5 – COMMENT: One commenter objected to the GEIS statement that "[t]he significance of potential impacts on plants and animals and their habitats depends on the importance or role of that plant or animal within the ecological community that is affected." The commenter stated that no species is insignificant and should not be treated as such.

RESPONSE: The NRC agrees in part and disagrees in part with the comment. As described in Section 1.8 of the GEIS, the NRC's methodology and approach to evaluating the environmental impacts of continued storage follows the guidance in NUREG–1748, *Environmental Review Guidance for Licensing Actions Associated with NMSS Programs: Final Report* (NRC 2003a), where applicable. NUREG–1748 defines important species as those that are rare, such as Federally listed threatened or endangered species under the Endangered Species Act; or species proposed for listing as threatened or endangered, or as a candidate for listing under the Endangered Species Act; or species State-listed as threatened, endangered, or species of concern. NUREG–1748 further defines other important species to include commercially or recreationally valuable species, species that are essential to the maintenance and survival of species that are rare and commercially or recreationally valuable (as defined previously), species that are critical to the structure and function of the local terrestrial and aquatic ecosystems, and species that may serve as biological indicators to monitor the effects of the facilities on the terrestrial and aquatic environments. While all species play a role within the ecological ecosystems surrounding continued storage facilities, the NRC followed the guidance in NUREG–1748 to highlight potential impacts to important species as a method to focus the analysis on those species that are rare, commercially or recreationally valuable, have a large role in ecosystems functions, or provide an indication on the overall health of the ecosystem. No changes were made to the GEIS or Rule as a result of these comments.

(919-7-14)

D.2.28.6 – COMMENT: One commenter stated that it was speculative to conclude that an away-from-reactor spent fuel storage facility would be located in an environment similar to the PFSF. Another commenter stated that it was speculative to conclude that an away-from-reactor spent fuel storage facility would be located in an area away from sensitive habitats. The commenter referred to GEIS statements that in some cases avoiding impacts to sensitive features may not be possible. The commenter noted that the PFSF was proposed to be located in close proximity to a wildlife management area and the Great Salt Lake, potentially affecting migratory birds (the NRC is interpreting this comment to refer to the intermodal transfer facility, which was a support facility for the PFSF that was proposed to be located near the noted management area and the

Great Salt Lake). Both commenters asserted that, as a result, a generic conclusion for the impacts of an away-from-reactor storage facility could not be supported.

RESPONSE: The NRC agrees in part and disagrees in part with the comments. The NRC used the PFSF as a model in the GEIS to describe the physical characteristics, ecological resources, and sensitive habitats near a hypothetical away-from-reactor ISFSI. As described in Section 5.0 of the GEIS, the NRC makes no assumptions about when the ISFSI might be built. However, the NRC assumes that any proposed away-from-reactor ISFSI would likely be similar to the assumed generic facility described in Section 5.0 from the standpoint of the size, operational characteristics, and location of the facility. In Section 5.9 of the GEIS, the NRC states it is likely that an away-from-reactor storage facility would be located in an area away from sensitive perennial and wetland habitats to satisfy environmental regulations and statutes. However, in some locations sensitive terrestrial features may be unavoidably affected. Based on these assumptions and the analysis in Section 5.9 in the GEIS, the NRC concluded that construction of the away-from-reactor ISFSI could have SMALL to MODERATE impacts on terrestrial resources because construction of the project could have some noticeable, but not destabilizing, impacts on terrestrial resources, depending on what terrestrial resources are affected.

As described in Section 5.0 of the GEIS, the NRC would evaluate the site-specific impacts of the construction and operation of any proposed facility as part of that facility's licensing process. Therefore, should the NRC receive an application for a proposed away-from-reactor ISFSI, a site-specific NEPA analysis would be conducted, which would include consideration of impacts to terrestrial and aquatic resources and special status species and habitats. As stated in Section 5.11 of the GEIS, coordination with other Federal and State natural resource agencies would further encourage ISFSI operators to take appropriate steps to avoid or mitigate impacts on State-listed species, migratory birds, habitats of concern, and other protected species and habitats. No changes were made to the GEIS or Rule as a result of these comments.

(579-11) (579-14) (579-15)

D.2.28.7 – COMMENT: One commenter expressed concerns with respect to variations in the presence of special status species and habitats near nuclear plant sites and compliance with environmental protection regulations and acts such as the Endangered Species Act of 1973, as amended (ESA). The commenter cited several incidents of alleged noncompliance with environmental statutes at the Pilgrim nuclear plant site, such as violations of Section 402 of the Clean Water Act, which establishes the NPDES permit program. The commenter stated that post-shutdown impacts could vary among nuclear plant sites depending on individual state efforts to enforce compliance with environmental statutes. As a result, the commenter asserted that the generic approach taken in the GEIS is inappropriate. Another commenter asserted that GEIS assumption of future compliance with the requirement to reinitiate special status species consultations under certain circumstances is flawed. To support this statement, the commenter

described consultations associated with a nuclear plant license renewal proceeding and stated that subsequent observation of a special status species in the vicinity of the nuclear plant should have necessitated reinitiation of consultation; however commenter stated that consultation was not reinitiated.

RESPONSE: The NRC disagrees with the comment. As described in Section 4.11 of the GEIS, the NRC would reinitiate consultation with National Marine Fisheries Service (NMFS) or Fish and Wildlife Service (FWS) during the period of continued storage if an activity meets the criteria in 50 CFR Part 402 for initiation or reinitiation of Section 7 consultation. The NRC follows the regulations and guidance regarding the ESA Section 7 consultation process that are provided in 50 CFR Part 402 and in the *Endangered Species Consultation Handbook* (FWS/NMFS 1998).

Topics specifically related to NPDES permit administration and compliance with other statutes (e.g., the ESA) during an operating reactor's licensed life are outside the scope of this GEIS. However, the NRC offers the following additional information.

This GEIS evaluates the environmental impacts of continued storage of spent fuel on special status species and habitats near reactors. Section 4.11 broadly characterizes the governing regulatory environment at existing nuclear power plant sites as may be relevant to the continued onsite storage of spent fuel in spent fuel pools and at-reactor ISFSIs. The NRC evaluates impacts to Federally listed threatened and endangered species, and where appropriate, conducts ESA Section 7 consultation, as part of its review of an application for license renewal. The NRC completed its license renewal environmental review for Pilgrim Nuclear Power Station and published the results in Supplement 29 to the License Renewal GEIS, issued in July 2007 (NRC 2007d). As required under the ESA, the NRC completed consultations with NMFS and FWS, as summarized in the Atomic Safety Licensing Board's memorandum and order denying a petition for intervention and request to admit a new contention concerning an endangered species at Pilgrim Nuclear Power Station (NRC 2012f).

Section 4.11 of the GEIS states that the NRC would reinitiate consultation when appropriate, such as if new information reveals effects of the action that may affect listed species or critical habitat in a manner or to an extent not previously considered. The NRC made this statement because it follows the requirements of the ESA and because the NRC would continue to follow the same procedures as during the operation of power plants, whereby the NRC evaluates new information, as appropriate, to determine whether reinitiation of ESA Section 7 consultation is warranted. For example, after ESA Section 7 consultation was completed for the Pilgrim Nuclear Power Station license renewal, the NRC received a letter from, Earthrise Law Center, on behalf of Jones River Watershed Association, dated March 22, 2013, to describe the occurrence of a mother-calf pair of right whales near Pilgrim Nuclear Power Station in January 2013 (Earthwise Law Center 2013). The letter further requested that the National Marine Fisheries Service (NMFS) and NRC reinitiate ESA Section 7 consultation. However, both the NRC and NMFS determined that the information provided in Earthrise Law Center's letter did

not present information warranting reinitiation of ESA Section 7 consultation (NRC 2013q; NMFS 2013). As required by the ESA, NRC would continue to evaluate all situations when reinitiation of ESA Section 7 consultation is appropriate during the period of continued storage.

The NRC has no statutory or regulatory authority over matters concerning discharge permits or compliance with the Clean Water Act. See Section D.2.27.20 of this appendix for additional information regarding a general overview of the NPDES permit program as it relates to the Pilgrim Nuclear Power Station and this GEIS and the generic approach to NRC's evaluation of surface-water impacts for this GEIS. See Section D.2.28.8 of this appendix for a discussion of how ecological impacts were assessed generically for this GEIS, rather than on a site-specific basis.

Changes were made in Section 4.11 of the GEIS to further clarify when reinitiation of ESA Section 7 consultation would occur during the period of continued storage. No changes were made to the Rule as a result of these comments.

(556-1-20) (622-3-8)

D.2.28.8 – COMMENT: Commenters stated that aquatic and terrestrial resources, including special status species and habitats, differ considerably among nuclear power plant sites depending on the quality and diversity of the ecosystems and habitats surrounding individual nuclear power facilities. Commenters cited specific examples of special status species and habitats in the vicinity of specific operating nuclear plants. Commenters contended that these variations necessitated preparation of site-specific assessments of impacts to aquatic and terrestrial resources and special status species and habitats. Another commenter supported his or her assertion of unique resources for a specific site by describing state standards that provide for the protection of ground and surface waters near a specific nuclear power plant due to the water's suitability as aquatic habitat and for recreational uses. The commenter further stated that site-specific assessments should include consideration of impacts of postulated accidents on special status species and habitats.

RESPONSE: The NRC agrees with the comments in part and disagrees with the comments in part. The NRC recognizes that Cape Cod Bay, Hudson River, and other riverine, estuarine, and terrestrial ecosystems are ecologically rich and valuable. As described in Section 4.10 of the GEIS, the NRC reviewed the findings in the License Renewal GEIS and site-specific assessments for new and operating reactors, which included an analysis of impacts from the operation of spent fuel pools. The License Renewal GEIS determined that impacts to aquatic and terrestrial resources would be SMALL for closed-cycle plants primarily based on withdrawal and discharge rates, as well as a historical review of site-specific effects at operating reactors (NRC 2013m). Given that the withdrawal and discharge rates would be smaller to operate the cooling system for a spent fuel pool as compared to a nuclear power plant, previous EISs for power reactors have conclusions that bound the effects of continued storage in spent fuel pools

on aquatic and terrestrial resources. For ISFSI operations, impacts would be similar to previous ISFSI EAs described in Section 4.11 of the GEIS because of the small size of ISFSIs and minimal liquid or gaseous effluents that would be generated during normal operations. The NRC did not identify any foreseeable additional effects from continued storage not described in the site-specific reviews or the License Renewal GEIS. Therefore the NRC concludes that the potential environmental impacts on aquatic and terrestrial resources for spent fuel pools and at-reactor ISFSIs would be SMALL.

As described in Section 4.11 of the GEIS, the impacts from spent fuel pool operations on Federally listed threatened and endangered species would be determined as part of ESA Section 7 consultation associated with original licensing of the power plant, license renewal, and for any other agency action as defined by the ESA that could affect listed species. Following the conclusion of an initial consultation, 50 CFR 402.16 directs Federal agencies to reinitiate consultation in circumstances where discretionary Federal involvement or control over the action has been retained or is authorized by law and where (1) the amount or extent of taking specified in the incidental take statement is exceeded, (2) new information reveals effects to Federally listed species or designated critical habitats that were not previously considered, (3) the action is modified in a manner that causes effects not previously considered, or (4) new species are listed or new critical habitat is designated that may be affected by the action, as described in Section 4.11.1.1 of the GEIS.

When the NRC reviews an application for a specifically licensed ISFSI, a site-specific environmental review will be conducted to determine site-specific impacts on aquatic and terrestrial ecology and special status species and habitats using the best available information.

Although the Commission has exercised its discretion under 10 CFR 51.20(a)(2) to develop a GEIS, this proceeding does not itself authorize any action that would affect the environment. Therefore, this Federal action is not subject to the consultation requirements of the ESA or the Magnuson-Stevens Act and the NRC does not need to consult with FWS or NMFS at this time. Prior to the issuance of a site-specific reactor or ISFSI license, the NRC will determine whether consultation is required. If consultation is required, the NRC will initiate consultation prior to the issuance of a site-specific license.

In addition, NRC and licensee coordination with other Federal and State natural resource agencies would further encourage licensees to take appropriate steps to avoid or mitigate impacts on special status species, habitats of conservation concern, and other protected species and habitats (e.g., those protected under the Fish and Wildlife Coordination Act, Coastal Zone Management Act, Marine Mammal Protection Act, the Migratory Bird Treaty Act, and the Bald and Golden Eagle Protection Act). NRC and licensee coordination with other Federal and State natural resource agencies would likely result in avoidance or mitigation measures that would minimize impacts on protected species and habitats.

Also see Section D.2.11.1 of this appendix for a discussion of why the NRC has determined it can conduct a generic analysis of the environmental impacts of continued storage and Section D.2.35.32 of this appendix for a discussion of impacts to the environment from postulated accidents.

The NRC made changes in Section 4.11 to further clarify when initiation and reinitiation of ESA Section 7 consultation would occur during the period of continued storage. No changes were made to the Rule as a result of these comments.

(622-3-1) (622-3-3) (622-3-4) (622-3-9) (710-4)

D.2.28.9 – COMMENT: One commenter questioned the conclusion that special status species and habitat consultations would need to be conducted for spent fuel pool cooling systems, in light of the conclusion that ISFSI operations are not likely to adversely affect special status species and habitats. This commenter observed that the draft GEIS found that spent fuel pool cooling system impacts would likely decrease in comparison to the impacts of water withdrawals and discharges at an operating plant. The commenter therefore concluded that a finding of not likely to affect special status species and habitats should be equally applicable to spent fuel pool cooling systems and ISFSIs. The commenter generally agreed that consultations would help to avoid and mitigate impacts to protected species.

RESPONSE: The NRC agrees with the comment in part and disagrees with the comment in part. As described in Sections 4.9 and 4.11, operation of a spent fuel pool has the potential to have greater impacts on aquatic species and habitats as compared to operation of an ISFSI because operation of a spent fuel pool requires water for cooling, whereas an ISFSI does not require water for cooling. As described in Section 4.11, the impacts from spent fuel pool operations to Federally listed threatened and endangered species would be determined as part of ESA Section 7 consultation associated with original licensing or license renewal of the power plant and afterwards if an activity meets the criteria in 50 CFR Part 402 for initiation or reinitiation of Section 7 consultation. In addition, the NRC would continue to follow the regulations and guidance regarding the ESA Section 7 consultation process that are provided 50 CFR Part 402 and in the *Endangered Species Consultation Handbook* (FWS/NMFS 1998).

When the NRC reviews an application for a specifically licensed ISFSI, a site-specific environmental review will be conducted to determine site-specific impacts on aquatic and terrestrial ecology and special status species and habitats.

As described in Section 4.11 of the GEIS, NRC and licensee coordination with other Federal and State natural resource agencies would further encourage licensees to take appropriate steps to avoid or mitigate impacts on special status species, habitats of conservation concern, and other protected species and habitats (e.g., those protected under the Fish and Wildlife Coordination Act, Coastal Zone Management Act, Marine Mammal Protection Act, the Migratory

Bird Treaty Act, and the Bald and Golden Eagle Protection Act). NRC and licensee coordination with other Federal and State natural resource agencies would likely result in avoidance or mitigation measures that would minimize impacts on protected species and habitats.

The NRC made changes in Section 4.11 to further clarify when initiation and reinitiation of ESA Section 7 consultation would occur during the period of continued storage. No changes were made to the Rule as a result of this comment.

(827-4-3)

D.2.29 Comments Concerning Historic and Cultural Resources

D.2.29.1 – COMMENT: Several commenters disagreed with the NRC's historic and cultural resource impact determinations for the long-term and indefinite storage timeframes for both at-reactor and away-from-reactor ISFSIs. The commenters asserted that historic and cultural resource impacts would likely be avoided or be SMALL for all continued storage scenarios. The commenters stated that construction of a replacement ISFSI or DTS could occur on lands previously disturbed by decommissioning activities; therefore, these facilities could be situated to avoid historic and cultural resources. In addition, the commenters asserted that National Historic Preservation Act of 1966, as amended (NHPA) and NEPA requirements and NRC regulations provide further assurance that unavoidable impacts would be mitigated during site-specific licensing actions and, thus, the impacts would be SMALL.

RESPONSE: The NRC disagrees with the comments. As discussed in Section 3.11 of the GEIS, only areas within and immediately surrounding the power block were extensively disturbed during initial power plant construction and less-developed portions of a power plant site could still contain unknown historic and cultural resources. Many existing at-reactor ISFSIs were constructed outside of the power block in less-developed or disturbed areas.

For away-from reactor ISFSIs, the NRC assumed that the replacement of the ISFSI and initial and replacement DTS would be constructed on land near the existing ISFSI. In most, but not all instances, placement of storage facilities on the site can be adjusted to minimize or avoid impacts (mitigation as the result of consultation) on any historic and cultural resources in the area.

The NRC recognizes that there is uncertainty associated with the degree of prior disturbance and what resources, if any, are present in areas where future ground-disturbing activities (e.g., initial and replacement DTS and replacement ISFSI) could occur. Further, resources may be present that would not have been considered significant at the time the initial or replacement facilities were constructed, but could become significant in the future.

As stated in Section 1.8, the NRC assumes that the land where the original facilities were constructed would be available for replacement facility construction; however, the NRC cannot eliminate the possibility that historic and cultural resources would be affected by construction activities during the indefinite timeframe because the initial ISFSI could be located within a less-disturbed area with historic and cultural resources in close proximity.

The magnitude of adverse effects on historic properties and impacts on historic and cultural resources largely depends on where the facilities are sited, what resources are present, the extent of proposed land disturbance, if the area has been previously surveyed to identify historic and cultural resources, and whether the licensee has cultural resource-management plans and procedures in place. Even a small amount of ground disturbance (e.g., clearing and grading) could affect a significant resource. Accordingly, the NRC has concluded that the impacts on historic and cultural resources for the long-term and indefinite timeframes would be SMALL to LARGE. This range takes into consideration routine maintenance and monitoring (i.e., no ground-disturbing activities), the absence or avoidance of historic and cultural resources, and potential ground-disturbing activities that could impact historic and cultural resources. The analysis also considers the uncertainties inherent in analyzing this resource area over long timeframes. These uncertainties include any future discovery of previously unknown historic and cultural resources; resources that gain significance within the vicinity and the viewshed (e.g., nomination of a historic district) due to improvements in knowledge, technology, and excavation techniques; and changes associated with predicting what types of resources would be considered significant to future generations. Sections 3.11, 4.12, and 5.12 of the GEIS were clarified in response to these comments. No changes were made to the Rule as a result of these comments.

(694-3-1) (694-3-5) (697-2-10) (697-2-14) (697-2-15) (827-4-4) (827-4-6) (827-4-7) (827-4-9) (942-5)

D.2.29.2 – COMMENT: A commenter expressed concern over potential LARGE impacts on historic and cultural resources and urged NRC to monitor the potential impacts to these irreplaceable resources because these resources could be changed forever. Another commenter noted the impact range used in the long-term and indefinite timeframes and asked if this range of impacts indicated that the NRC did not actually know the impact.

RESPONSE: The scope of the GEIS is to generically analyze the environmental impacts of continued storage of spent fuel to support the Rule. For historic and cultural resources, the magnitude of impact largely depends on where on a site the facilities are sited, what resources are present, the extent of proposed land disturbance, whether the area has been previously surveyed to identify historic and cultural resources, and whether the licensee has management plans and procedures that are protective of historic and cultural resources. Even a small amount of ground disturbance (e.g., clearing and grading) could affect a small but significant resource. This range takes into consideration routine maintenance and monitoring (i.e., no

ground-disturbing activities), the absence or avoidance of historic and cultural resources, and potential ground-disturbing activities that could impact historic and cultural resources. The analysis also considers the uncertainties inherent in analyzing this resource area over long timeframes. These uncertainties include any future discovery of previously unknown historic and cultural resources; resources that gain significance within the vicinity and the viewshed (e.g., nomination of a historic district) due to improvements in knowledge, technology, and excavation techniques; and changes associated with predicting what types of resources would be considered significant to future generations. A moderate to large impact could result if historic and cultural resources are present at the site and, because they cannot be avoided, are impacted by ground-disturbing activities related to the continued storage of spent fuel. No changes were made to the GEIS or Rule as a result of these comments.

(7-2) (326-56-3)

D.2.29.3 – COMMENT: Two commenters stated that environmental justice and historic and cultural impacts cannot be addressed in a generic analysis and that effects will be addressed in site-specific licensing actions for short-term, long-term, and indefinite storage. One commenter stated these impacts must be addressed in site-specific EISs, and this should be made clear in the GEIS. The commenter is concerned that EIS development would simply adopt the findings of the GEIS and would fail to conduct a site-specific analysis for environmental justice and historic and cultural impacts. The commenter also asserted that impact determinations of "SMALL, MEDIUM, or LARGE" for historic and cultural resources shows that it cannot be addressed in a generic analysis. In addition, based on this conclusion, the commenter questioned the validity of the NRC's statement in Chapter 7 that "[t]he value of reviewing continued storage in site-specific NEPA analyses is difficult to quantify; however, a site-specific analysis of the environmental impacts of continued storage would likely not reveal any new information that cannot be addressed in a generic analysis."

RESPONSE: NRC agrees in part and disagrees in part with the comments. The NRC disagrees that the differences between sites render a generic analysis inappropriate. The environmental justice impact analysis performed for the GEIS was conducted in accordance with the Commission's "Policy Statement on the Treatment of Environmental Justice Matters in NRC Regulatory and Licensing Actions" (see 69 FR 52040), which states "[t]he Commission is committed to the general goals set forth in EO 12898 (59 FR 7629), and strives to meet those goals as part of its NEPA review process." The GEIS considers the potential human health and environmental effects from continued storage of spent fuel on minority and low-income populations through the analysis of environmental justice impacts. The GEIS also evaluates the potential impacts to historic and cultural resources that could be important to minority or low-income populations.

Per the Commission's policy statement, the NRC considers environmental justice issues in all licensing and regulatory actions, primarily by conducting an environmental review and fulfilling

its NEPA responsibilities for these actions. Environmental justice-related issues and demographic conditions (i.e., potentially affected minority and low-income populations) differ from site to site, and environmental justice issues and concerns usually cannot be resolved generically with regard to specific NRC licensing actions. Consequently, environmental justice impacts are normally considered in site-specific environmental reviews for "underlying licensing actions for each particular facility" (69 FR 52040). However, as explained Sections D.2.23.1 and D.2.11.1 of this appendix, the NRC has determined that a generic analysis of the human health and environmental effects of continued storage on minority and low-income populations and historic and cultural resources is possible.

As explained in the GEIS, spent nuclear fuel is currently being stored in spent fuel pools and ISFSIs (where available) at all commercial nuclear power plants in the United States. One option considered in the GEIS is the use of at-reactor storage until a geologic repository becomes available. The continued storage of spent fuel at these existing sites would not create any new effect on minority and low-income populations and historic and cultural resources beyond what is currently being experienced.

This rulemaking does not authorize the initial or continued operation of any nuclear power plant, and it does not authorize storage of spent fuel. Environmental justice, as well as impacts on socioeconomic and historic and cultural resources, are considered in all site-specific environmental reviews for specific licensing actions. Further, should the NRC receive an application for a proposed away-from-reactor ISFSI, a site-specific NEPA analysis would be conducted, which would include consideration of environmental justice. Additionally, because the GEIS does not identify specific sites for NRC licensing actions, a NHPA Section 106 review has not been performed. The NRC complies with NHPA Section 106 and the requirements in 36 CFR Part 800 in site-specific NEPA licensing actions (e.g., new reactor licensing, reactor license renewal, away-from-reactor ISFSIs, specifically licensed at-reactor ISFSIs, and DTSs).

The NRC agrees with the comments regarding the validity of the statement, "The value of reviewing continued storage in site-specific NEPA analyses is difficult to quantify; however, a site-specific analysis of the environmental impacts of continued storage would likely not reveal any new information that cannot be addressed in a generic analysis." This statement has been revised to read, "The value of reviewing continued storage in site-specific NEPA analyses is difficult to quantify." No changes were made to the Rule as a result of these comments.

(93-4) (93-7) (505-5)

D.2.29.4 – COMMENT: A commenter concurred with the GEIS findings regarding at-reactor and away-from-reactor ISFSIs as they relate to impacts on historic and cultural resources. However, the commenter disagreed with the statement that the entire power block is "extremely disturbed" with no possibility for any surviving pockets of archaeological sensitivity, unless supporting documentation supports such an assumption within the area of potential effect.

RESPONSE: The NRC agrees in part and disagrees in part with the comment. The NRC's evaluation of the environmental impacts of continued storage builds upon substantial operating experience over the licensed life of the reactor. Section 3.11 of the GEIS contains information based on experience from approximately 50 reactor license renewal reviews and 10 ESP and combined license environmental reviews. During these reviews, the NRC examined historic and cultural resource survey reports and aerial photographs (depicting sites prior to, during, and post-power plant construction) and consulted with State Historic Preservation Officers or appropriate Tribal Historic Preservation Officer, Tribal representatives, and other interested parties and determined that the land within and immediately surrounding the power block is extensively disturbed.

The term "power block" refers to the buildings and components directly involved in generating electricity at a power plant. At a nuclear power plant, the components of the power block vary with the reactor design, but always include the reactor and turbine building, and usually include several other buildings that house access, reactor auxiliary, safeguards, waste processing, or other nuclear generation support functions. Nuclear power block buildings require significant excavation of existing material, followed by placement of structural fill for a safe and stable base. Building excavations are extensive, and the area of excavation is larger than the as-built power block and reactor containment. Section 3.11 of the GEIS does acknowledge that some developed and less-developed portions of a power plant site, including areas not extensively disturbed (e.g., construction laydown areas), could still contain unknown historic and cultural resources. As a result of this comment, the NRC has clarified the text within Section 3.11. No changes were made to the Rule as a result of this comment.

(920-51)

D.2.29.5 – COMMENT: A commenter objected to the NRC's assumption that away-from-reactor ISFSIs could be situated to avoid historic and cultural resources. The commenter stated that because the NRC noted that avoiding impacts may not be possible, the NRC cannot reach a generic impact determination for these resources.

RESPONSE: The NRC disagrees that a generic finding for continued storage cannot be made for historic and cultural resources. The scope of the GEIS is to analyze the generic environmental impacts of continued storage of spent fuel to support an update to the Rule. The NRC considered a range of potential adverse effects to historic properties or impacts on historic and cultural resources in the GEIS to account for varying scenarios. This range takes into consideration routine maintenance and monitoring (i.e., no ground-disturbing activities), the absence or avoidance of historic and cultural resources, and potential ground-disturbing activities that could affect historic and cultural resources. The analysis also considers uncertainties inherent in analyzing this resource area over long timeframes. These uncertainties include any future discovery of previously unknown historic and cultural resources; resources that gain significance within the vicinity and the viewshed (e.g., nomination of a

historic district) due to improvements in knowledge, technology, and excavation techniques; and changes associated with predicting what types of resources would be considered significant to future generations. The analysis concluded an impact range from SMALL to LARGE. A potential moderate or large impact could result if historic and cultural resources are present at a site and, cannot be avoided, are impacted by ground-disturbing activities related to the continued storage of spent fuel. As stated in Section 5.12 of the GEIS, NRC authorization to construct and operate an away-from-reactor ISFSI would constitute a Federal action under NEPA and would be an undertaking under the NHPA. In accordance with 36 CFR Part 800, the NRC would conduct an NHPA Section 106 review to determine whether historic properties are present in the area of potential effect, and if so, whether construction and operation of the proposed ISFSI would result in any adverse effects on such properties. No changes were made to the GEIS or Rule as a result of this comment.

However, the NRC does agree that the assumption in Section 5.12 of the GEIS (i.e., that away-from-reactor ISFSIs could be situated to avoid historic and cultural resources) needs to be clarified and caveated. In most, but not all instances, placement of facilities on a proposed site could be adjusted to minimize or avoid impacts on historic and cultural resources in the area, but the NRC recognizes that this is not always possible. Because an away-from-reactor ISFSI does not depend on a significant water supply and has limited electrical power needs, an applicant may have more flexibility in how it chooses to place facilities on a site and, therefore, have a greater chance of avoiding historic and cultural resources in the area. The NRC revised the text in Section 5.12 in response to this comment. No changes were made to the Rule as a result of this comment.

(579-10)

D.2.29.6 – COMMENT: A commenter expressed concern regarding the analysis of impacts to historic and cultural resources from ISFSI and DTS construction. Citing Prairie Island Nuclear Generating Plant as an example, the commenter asserted that reliance on original licensing documents is not a guarantee that all resources are documented or no longer present. The commenter stated that potential exists for deeply buried prehistoric archaeological sites to be present, even within disturbed areas of the site. In addition, the commenter noted that not all ISFSIs are located within the original footprint of power plant construction and cited the generally licensed Point Beach ISFSI as an example.

The commenter also asserted that the GEIS should discuss how the environmental impacts of generally licensed ISFSIs would be evaluated before the reactors are decommissioned. The commenter noted that NUREG–1571 *Information Handbook on Independent Spent Fuel Storage Installations* (NRC 1996b) states that because generally licensed ISFSIs are restricted to plants operating under 10 CFR Part 50, a utility must apply for a site-specific license when the plant is decommissioned. The commenter expressed concern that once these generally licensed ISFSIs go through the more rigorous site-specific licensing process it will be too late,

and noted that any potential historic or cultural resources would already have been destroyed by the initial construction of the generally licensed ISFSI. In addition, the commenter stated that it is not clear how future dry transfer facilities will be evaluated for the purposes of NEPA. The commenter asked if the NRC environmental review would be conducted using NUREG–1748, *Environmental Review Guidance for Licensing Actions Associated with NMSS Programs: Final Report* (NRC 2003a) or some other guidance.

RESPONSE: The NRC agrees in part and disagrees in part with the comments. As discussed in Section D.2.29.4 of this appendix, areas within and immediately surrounding the power block were extensively disturbed during initial power plant construction. The GEIS acknowledges in Sections 3.11 and 4.12 that some developed and less-developed portions of a power plant site, including areas that were not extensively disturbed (e.g., construction laydown areas), could still contain unknown historic and cultural resources. Sections 3.11 and 4.12 of the GEIS have been revised to clarify the extent of previous ground-disturbing activities in the footprint of the power plant.

The NRC agrees that reliance on original licensing documents is not a guarantee that all resources are either documented or no longer present. During site-specific licensing reviews, the NRC reviews previous historic and cultural resource survey reports along with new and updated reports and aerial photographs (depicting sites prior to, during, and post-power plant construction), and consults with State Historic Preservation Officers, Tribal Historic Preservation Officers, Tribes, and interested parties including the public. In addition, the NRC performs updated literature reviews and site file searches to identify any new information onsite and within the surrounding environs.

As discussed in Section 1.8 of the GEIS, the NRC assumes that at-reactor ISFSIs are constructed onsite under a general or site-specific license during the term of reactor operations. Therefore, the impacts associated with the initial construction of a generally licensed at-reactor ISFSI are outside the scope of this GEIS. The environmental impacts of construction and operation of generally licensed ISFSIs were analyzed in 1990 as part of the 10 CFR Part 72 rulemaking. The EA (NRC 1989b) resulted in a FONSI (see 55 FR 29181, page 29190). The NRC does not require licensees to convert general licenses to specific licenses once reactor decommissioning plans are announced. Impacts associated with eventual reactor decommissioning would be considered when a licensee submits its post-shutdown decommissioning activities report for review under 10 CFR 50.82(a)(4) or 10 CFR 52.110(d)(1) and its license-termination plan for review and approval per 10 CFR 50.82(a)(9) or 10 CFR 52.110(i). In accordance with 10 CFR Part 72, a specific ISFSI licensee would submit its decommissioning plan for review and approval under 10 CFR 72.54. NRC authorization of a final decommissioning plan or license-termination plan would constitute Federal actions under NEPA and would be undertakings under the NHPA, thus requiring site-specific reviews of impacts to historic properties and historic and cultural resources. In addition, as stated in Section 4.12 of the GEIS, many reactor licensees have conducted surveys to identify historic

and cultural resources and developed and implemented historic and cultural resource-management plans and procedures for reactor license and reactor license renewal applications. These plans and procedures address inadvertent discoveries and require consideration of resources prior to engaging in ground-disturbing activities.

Should the NRC receive an application for a DTS, a site-specific environmental and safety review, including an NHPA Section 106 review, would be conducted in accordance with 10 CFR Part 72 and applicable guidance, as discussed in Section 4.12 of the GEIS. A separate site-specific NHPA Section 106 review would be required for ISFSI replacement and construction, operation, replacement of a DTS, or construction of an away-from-reactor-ISFSI. At that time, a review to determine the level of environmental impact and to identify specific historic and cultural resources and appropriate mitigation or protection measures would be performed and implemented. Clarifying changes were made to Section 6.4.11.2 of the GEIS as a result of these comments; no changes were made to the Rule as a result of these comments.

(619-1-18) (619-1-19) (619-1-20)

D.2.29.7 – COMMENT: Two commenters expressed concern that the GEIS did not adequately analyze the consequences of a spent fuel accident or act of sabotage on Indian Tribes. The commenters stated that a generic analysis is inappropriate because only the Prairie Island Indian Community is at risk of its homeland being rendered uninhabitable by a spent fuel accident.

One commenter stated that the GEIS failed to adequately consider and weigh the long-term viability of the Prairie Island Reservation as a homeland for the Tribe against the risks of continued storage of spent fuel. The commenter stated that the impacts resulting from a spent fuel accident or an act of sabotage would have a devastating socioeconomic impact on the Tribe. Additionally, the commenter noted that relocating the Tribe would invoke a long, cumbersome, and uncertain land acquisition process with the United States government.

RESPONSE: The NRC disagrees with the comments. The GEIS adequately analyzes the generic consequences of spent fuel accidents and acts of sabotage. As discussed in the Section D.2.11.1 of this appendix, the NRC's evaluation of the environmental impacts of continued storage builds upon substantial operating experience and site-specific analyses conducted as part of every licensing review. For design basis accidents, all licensees must show that storage facilities will either withstand the physical conditions of an accident, thus preventing a release, or that the radiation dose caused by a release will not exceed NRC dose limits. For severe accidents, the NRC has concluded, after consideration of the probability and consequences of events and regulatory corrective actions, that the NRC's review of both man-made and natural causes of accidents during initial licensing or license renewal, as well as regulatory oversight, will address site-specific factors (e.g., natural phenomena hazards and nearby population density).

Further, the safe operation of spent fuel pools and at-reactor ISFSIs will continue to be regulated by the NRC. As described in Section B.3.3 of the GEIS, safety issues and concerns will be addressed by the NRC on an ongoing basis at every spent fuel storage facility. Section 4.18.2 of the GEIS describes the environmental impact of severe accidents, including economic consequences. As discussed in Section D.2.36.3 of this appendix, the NRC believes that a generic approach is appropriate for a terrorism analysis because the GEIS makes impact determinations that apply to all spent fuel storage sites.

The comments do not explain how the risk of an event that would lead to relocation would be unique to continued storage or would be inadequately addressed in a site-specific licensing review. Further, the analysis in Appendix F of the GEIS considers the costs of relocation due to a spent fuel pool fire or other severe accident. See also Sections D.2.35.34 and D.2.35.16 of this appendix for additional information related to costs in the event of a severe accident. While the NRC acknowledges that the Tribe would have to follow the process articulated in the Indian Reorganization Act for relocation, that issue is beyond the scope of this GEIS and Rule. No changes were made to the GEIS or Rule as a result of these comments.

(328-1-10) (473-16-6)

D.2.29.8 – COMMENT: A commenter stated that the NRC failed to clarify why it stated in the GEIS that historic and cultural resources are not likely to be present within heavily disturbed areas. The commenter stated that NRC should state that this is because the damage is already done and that any resources located in those areas were destroyed.

RESPONSE: The NRC disagrees with the comment. Section 3.11 of the GEIS explains why it is unlikely for sites to be located within and immediately surrounding the power block. Although the NHPA was passed in 1966, the process for complying with the law was developed during the 1970s and 1980s after many of these facilities were constructed. The likelihood for historic and cultural resources to be found within the power block is low as construction of the nuclear power plant resulted in deep (extensive) soil disturbance. No changes were made to the GEIS or Rule as a result of this comment.

(919-5-21)

D.2.29.9 – COMMENT: A commenter provided historical background information for the Santa Ynez Band of the Chumash Indians, located 120 km (75 mi) south of the Diablo Canyon Power Plant in Avila, California. The commenter also referenced the NHPA, EOs 13007 (61 FR 26771) and 13175 (65 FR 67249), the Federal government's Tribal Trust Responsibility, United Nations Declaration on the Rights of Indigenous Peoples, and the Advisory Council on Historic Preservation regulations at 36 CFR Part 800, which require consultation with Tribes prior to proceeding with Federal undertakings.

RESPONSE: The NRC appreciates the comments provided by the Santa Ynez Band of Chumash Indians describing the Federal requirements for government-to-government consultation. The NRC recognizes that the Federal government owes a general trust responsibility to Federally recognized Indian Tribes. The NRC also recognizes that there are specific government-to-government consultation responsibilities regarding interactions with Federally recognized Tribal governments due to their status as dependent sovereign nations. As such, the NRC offered Federally recognized Tribes the opportunity for government-to-government consultation consistent with the principles in Executive Order 13175, "Consultation and Coordination with Indian Tribal Governments" issued November 9, 2000 (65 FR 67249) during the scoping and draft GEIS comment periods.

As discussed in the GEIS, the rulemaking does not authorize the initial or continued operation of any nuclear power plant, nor does it authorize storage of spent fuel. Because the rulemaking does not identify specific sites for NRC licensing actions, this proceeding cannot facilitate an NHPA Section 106 or Executive Order 13007 (61 FR 26771) review. The NRC will comply with NHPA Section 106 requirements and other appropriate laws and orders when an applicant submits a request for a site-specific license (e.g., new reactor licensing, reactor license renewal, away-from-reactor ISFSIs, specifically licensed at-reactor ISFSIs, and DTSs). No revisions were made to the GEIS or Rule as a result of these comments.

(500-1) (500-2)

D.2.29.10 – COMMENT: One commenter provided statements in opposition to the license renewal of Diablo Canyon Power Plant, Units 1 and 2 (Diablo Canyon), as well as continued onsite storage of spent fuel at that site. In particular, the commenter stated that Native people have not granted permission to move forward with the relicensing of Diablo Canyon, continued onsite storage of spent fuel, or the GEIS. The commenter asserts that the land that Diablo Canyon occupies is owned by the Northern Chumash Tribe because the Treaty of Guadalupe Hidalgo was never ratified by the U.S. Government.

RESPONSE: The comments express opposition to the relicensing and continued storage of spent fuel at Diablo Canyon and the GEIS and Rule. The NRC recognizes the comment's opposition to the GEIS and Rule. Similar comments that expressed general opposition to the GEIS and Rule can be found in Section D.2.47.1 of this appendix. With respect to the commenter's specific concerns related to Diablo Canyon and its license renewal, the NRC considers these portions of the comment to be beyond the scope of the Rule and the analysis in the GEIS. As stated in the GEIS, this rulemaking does not authorize the initial or continued operation of any nuclear power plant, and does not authorize storage of spent fuel. In addition, neither the GEIS or rulemaking identify specific sites for NRC licensing actions that would trigger Section 106 consultation requirements that are normally conducted during site-specific licensing reviews.

The NRC is aware of the historic and cultural significance of the land surrounding Diablo Canyon and is committed to working with Tribes, groups, or individuals with a vested interest in the area during its review of the environmental effects of continued operation. At the request of the Pacific Gas & Electric Company, the environmental review of the license renewal application for Diablo Canyon has been delayed pending completion of seismic testing. A schedule for completing the environmental review will be developed after submittal of the seismic evaluation report by Pacific Gas & Electric Company. At this time there is no projected schedule for resuming the project activities, but the NRC will be in contact with the Northern Chumash Tribe when the license renewal environmental review resumes. No changes were made to the GEIS or Rule as a result of this comment.

(326-2-2)

D.2.29.11 – COMMENT: A commenter stated that petitions to intervene by Don't Waste Michigan and Nuclear Information and Resource Service in the Palisades Nuclear Plant license renewal review proceeding led to the NRC bringing in special expertise to address allegations of significant potential historic and cultural resources that could be impacted. The commenter believed that environmental intervention and public comment made a significant difference for the better.

RESPONSE: The NRC acknowledges the importance of public participation throughout the NEPA process and is committed to open public participation and conducts Tribal consultation during all environmental reviews. This comment is specific to the Palisades Nuclear Plant license renewal review and its NHPA Section 106 review. The NRC complied with NHPA Section 106 to ensure consideration and protection of historic and cultural resources at the Palisades Nuclear Plant. As this is a site-specific comment, it is considered outside the scope of the GEIS and Rule. No changes were made to the GEIS or Rule as a result of this comment.

(919-5-20)

D.2.29.12 – COMMENT: A commenter stated that reactor sites vary in proximity to historic and cultural resources. The commenter noted that the Pilgrim Nuclear Generating Station is located near Boston, Massachusetts, which is renowned for its rich cultural and historic institutions and asserted that impacts on these resources would be far greater than for a reactor located in a remote rural area.

RESPONSE: The NRC disagrees with this comment. As stated in Section 4.12 of the GEIS, the magnitude of impact to historic and cultural resources depends on not only what resources are present, but the extent of proposed land disturbance, whether the area has been previously surveyed to identify historic and cultural resources, and whether the licensee has management plans and procedures that are protective of historic and cultural resources. The types of historic and cultural resources that exist at reactor sites across the United States are as diverse as the

environments they exist in; including rural and semi-urban areas. For these reasons, the NRC considered a range of potential adverse effects on historic properties or impacts on historic and cultural resources in the GEIS to account for varying scenarios. The analysis concluded an impact range from SMALL to LARGE. No changes were made to the GEIS or Rule as a result of this comment.

(556-1-21)

D.2.30 Comments Concerning Noise

D.2.30.1 – COMMENT: A commenter asked if gunfire exercises, conducted by security personnel during power plant operations, would continue to be a source of noise into the future at nuclear fuel storage sites.

RESPONSE: Spent fuel storage facilities are required to meet the physical protection requirements in 10 CFR Parts 72 and 73, which include a requirement to have trained security personnel. To the extent that security training at some sites might include the use of outdoor onsite practice ranges, it is possible that security training may result in occasional noise. However, these activities would be infrequent. Therefore, these activities would not change the SMALL impact determination for any timeframe considered in the GEIS. No changes were made to the GEIS or Rule as a result of this comment.

(919-6-1)

D.2.31 Comments Concerning Aesthetics

D.2.31.1 – COMMENT: One commenter stated that aesthetic impacts for an away-from-reactor ISFSI are site-specific, and cited concerns about light pollution at the PFSF as an example.

RESPONSE: The NRC agrees with the commenter. The NRC used the PFSF as a model in the GEIS to describe the physical characteristics of a hypothetical away-from-reactor ISFSI. As stated in Section 5.14 of the GEIS, should the NRC receive an application for a proposed away-from-reactor ISFSI, a site-specific NEPA analysis would be conducted; this analysis would include consideration of aesthetic impacts. No changes were made to the GEIS or Rule as a result of this comment.

(579-16)

D.2.32 Comments Concerning Waste Management

D.2.32.1 – COMMENT: A commenter stated that the NRC failed to consider waste generated from producing nuclear fuel, underestimated the amount of waste that would be generated from continued storage, and assumed that all of the spent fuel to be stored is homogeneous.

RESPONSE: The NRC disagrees with the comment. The impacts associated with the management and disposal of waste generated from the production of nuclear fuel are not within the scope of the GEIS and Rule. The NRC addresses the environmental impacts associated with the production of nuclear fuel as part of the individual licensing actions for uranium enrichment, fuel fabrication, and other fuel cycle facilities. With regard to the comment that the GEIS treats all spent fuel as homogeneous, the GEIS considers a range of spent fuel characteristics including spent fuel type (e.g., boiling water reactor [BWR] and pressurized water reactor [PWR]), burnup, and age after service in reactor. Sections 4.15 and 5.15 of the GEIS describe the amount of waste that would be generated from the continued storage of spent fuel. The comment provides no information to support the assertion that the analysis underestimates the amount of waste that would be generated. No changes were made to the GEIS or Rule as a result of this comment.

(711-8)

D.2.32.2 – COMMENT: A commenter expressed concern that the GEIS does not address Class C low-level or GTCC radioactive waste. The commenter asked how such waste would be transported to the Waste Control Specialists LLW site in Andrews, Texas, noting that en route from California it would need to pass through several states and many towns. The commenter also asked about the disposition of pipes, valves, and other wastes, as well as Class A and B LLWs. The commenter wanted information about the effects of LLW on human fetuses, infants, and children.

RESPONSE: The NRC disagrees that the GEIS needs to address GTCC wastes. GTCC waste is not generated as a result of storing spent fuel in pools or in dry storage. Therefore, this waste type is not within the scope of the GEIS and Rule, which focus on the impacts of storing commercial spent fuel during the continued storage period. Section 3(b)(1)(D) of the Low-Level Radioactive Waste Policy Amendments Act of 1985 specifies that GTCC radioactive waste disposal is a Federal responsibility, and is to be disposed of in a facility that is adequate to protect public health and safety and is licensed by the NRC in accordance with the requirements in 10 CFR Part 61. The environmental impacts associated with disposal of GTCC LLW are currently being assessed by the DOE in its *Draft EIS for the Disposal of Greater-Than-Class C (GTCC) Low-Level Radioactive Waste (LLRW) and GTCC-Like Waste* (DOE/EIS-0375D, DOE 2011b). Consequently, assessing the environmental impacts associated with disposal of GTCC LLW is outside the scope of analysis for the GEIS and Rule.

The amount of waste transported to Waste Control Specialists LLW site in Andrews, Texas, or any other LLW disposal facility, is evaluated as part of licensing actions for individual sites. These evaluations consider the amount, type, and timing of waste generated and transportation routes to potential waste disposal facilities.

The environmental impacts associated with the management and disposal of any LLW, including Class C waste, that is generated as a result of the storage of spent fuel is discussed in Section 4.15 of the GEIS. This evaluation includes any material that has become radioactively contaminated and activated metals, including pipes, valves, and rubble. LLWs are also discussed in Section D.2.32.3 of this appendix.

The NRC based its dose limits and calculations on a descriptive model of the human body referred to as "standard man," but has always recognized that these limits must be informed and adjusted in some cases for other factors (e.g., age and gender). More information about how the potential effects of radiation on human fetuses, infants, and children are considered in the calculation of doses and in setting dose limits is provided in Section D.2.34.5 of this appendix. Additional information is also available on the NRC's website, at www.nrc.gov/about-nrc/radiation/rad-health-effects.html.

The text box in Section 3.14 of the GEIS has been updated to include LLWs. No changes were made to the Rule as a result of this comment.

(325-31-4)

D.2.32.3 – COMMENT: Commenters stated that LLW can contain the same long-lived species present in HLWs, and that the GEIS should include information on the types and concentrations of radionuclides present in LLWs that are generated when casks are replaced. The commenters wanted this information to account for all types of casks and geographic locations of the spent fuel storage facilities. One commenter questioned the assumptions and impact conclusions in the GEIS regarding LLW, stating that the GEIS should not consider LLW impacts to be small. In describing the types of materials included as LLW, the commenter cited a Government Accountability Office (GAO) document (under letterhead of the former GAO title "General Accounting Office"), *Radioactive Waste: Answers to Questions Related to the Proposed Ward Valley Low-Level Radioactive Waste Disposal Facility* (GAO 1998), pointing specifically to a description of the materials and radionuclides found in LLW and the effects of human exposure under certain conditions to a quantity of cesium-137.

The commenters also stated that LLW disposal sites across the nation have leaked and that these risks and impacts should be analyzed.

RESPONSE: The NRC agrees in part and disagrees in part with the comments. The NRC agrees that LLW can contain the same radionuclides present in spent fuel. The NRC disagrees with the comments stating that the GEIS needs more detail concerning the types of LLWs generated and questioning the GEIS's impact conclusions. The environmental impacts associated with the management of LLW produced by spent fuel repackaging are evaluated in Section 4.15.2.1 and 5.15.2 of the GEIS. LLW is a general term for a wide range of items that have become contaminated with radioactive material or have become radioactive through exposure to neutron radiation. Thus, such wastes can contain the same radionuclides that are

present in spent fuel. LLW is classified in 10 CFR 61.55 according to the concentrations of specific radionuclides present. All LLW must be managed and disposed of in accordance with NRC or Agreement State requirements. The GEIS evaluates the environmental impacts of storing and disposing of LLWs generated from spent fuel storage that accounts for all of the radionuclides present in these wastes. Further, the GEIS considers the environmental impacts associated with the types of casks and storage systems certified by the NRC for the storage of spent fuel. Because LLW management would continue to be subject to Federal and State regulations and enforcement and because the NRC expects disposal capacity for LLW to be available when needed, the NRC determined the impacts from LLW management and disposal would be SMALL. Site-specific environmental impacts associated with LLW disposal, including potential leaks from disposal facilities, are evaluated for each disposal site as part of the NRC or Agreement State licensing process under 10 CFR Part 61 or the correlating Agreement State regulations. These site-specific environmental impacts are outside the scope of this GEIS and Rule. No changes were made to the GEIS or Rule as a result of these comments.

(553-11) (711-11) (805-11)

D.2.32.4 – COMMENT: Commenters stated their belief that the impacts for managing nonradioactive wastes for the indefinite period would be SMALL.

RESPONSE: The NRC disagrees with the comment. The SMALL to MODERATE impact determination reflects the potential for noticeable impacts on local and regional landfill capacity caused by the relatively large volumes of demolition wastes from replacement of the DTS, casks, canister transfer building, and pads. The comments provide no information to support the conclusion that the environmental impacts for waste management of nonradioactive waste would be SMALL for indefinite storage. No changes were made to the GEIS or Rule as a result of these comments.

(694-3-2) (697-2-11)

D.2.32.5 – COMMENT: Two commenters noted that the GEIS analyzes low-level radioactive wastes generically, but that some nuclear power plants do not have access to LLW disposal facilities, and low-level waste generated at reactors without access to disposal facilities will present environmental concerns different from those of reactors having access to disposal facilities. One commenter also pointed out that boiling water reactors generate about twice as much LLW as pressurized water reactors.

RESPONSE: The NRC disagrees with these comments. As stated in Section 3.14.1 of the GEIS, the EnergySolutions LLW disposal facility in Clive, Utah, can accept Class A LLW from any state. The Waste Control Specialists, LLC, site in Andrews County, Texas, can accept waste for disposal from individual generators within the Texas Low-Level Radioactive Waste Disposal Compact as well as generators outside the Compact, after receiving permission from

the Compact. Therefore, while some reactors, (e.g., the Pilgrim Nuclear Generating Station), are located in states that are not part of a LLW disposal compact, disposal facilities are available for LLW produced by these reactors. The NRC acknowledges that the amount of LLW waste varies by reactor type and design. This variability is accounted for in the GEIS evaluation of environmental impacts associated with waste management. More information about the generic treatment of issues in the GEIS is provided in Section D.2.11.1 of this appendix.

Clarifying text has been added to Section 3.14.1 of the GEIS concerning LLW disposal availability for sites not located in compact states. No changes were made to the Rule as a result of these comments.

(556-1-27) (783-3-5)

D.2.32.6 – COMMENT: A commenter wanted to know how much LLW would be generated as a result of repeated repackaging. The commenter also wanted to know how long repackaging would need to continue (i.e., how long does the spent fuel remain hazardous).

RESPONSE: Estimates of the amount of LLW generated from repackaging of spent fuel are provided in the GEIS. The estimates for the amount of LLW generated by repackaging spent fuel during at-reactor continued storage are provided in Section 4.15.2.1. The volume of LLW generated by repackaging spent fuel during away-from-reactor continued storage is provided in Section 5.15.2. The GEIS assumes that this repackaging would need to occur every 100 years.

Regarding the indefinite timeframe over which storage (and possible repackaging) would occur, see Section D.2.18.1 of this appendix. No changes were made to the GEIS or Rule as a result of this comment.

(711-37)

D.2.32.7 – COMMENT: Commenters indicated the NRC may not have a basis to state that sufficient LLW disposal capacity will be available when needed, stating that the assumption in Section 1.8 of the GEIS may be incorrect. One commenter stated that the NRC, in concluding that the incremental impacts of LLW would be SMALL, is ignoring the fact that most radioactivity is from the irradiated fuel and that there may not be a disposal site available to accept LLW. The commenter stated that the NRC ignores the history of radioactive waste disposal sites in the United States, and that the GEIS has no basis to support a conclusion that sufficient LLW disposal capacity will be available when needed. Another commenter stated the NRC should analyze the possibility that a disposal facility might not be available unless the Federal government ensures one is available.

One commenter stated that the GEIS neglects to mention that the Waste Controls Specialists LLW disposal facility in Texas “threatens the Ogallala Aquifer” with radionuclide contamination.

Commenters also stated the GEIS needs to address the increasing costs of LLW disposal. In questioning the GEIS assumptions concerning LLW disposal availability and the costs of disposal, one commenter referenced NUREG–1307, *Report on Waste Burial Charges: Changes in Decommissioning Waste Disposal Costs at Low-Level Waste Burial Facilities* (NRC 2013r), stating that the report indicates that some facilities do not have access to disposal for their LLWs and that the report must account for the costs associated with this lack of access. In addition, the commenter noted that LLW disposal fees increased by 12 percent from 2010 to 2012, and that the GEIS needs to acknowledge such inflationary increases.

RESPONSE: The NRC disagrees with the comments asserting that there may not be a basis for the assumption that sufficient LLW disposal capacity will be available when needed. As stated in the GEIS, the NRC expects that market demand will result in the development of additional LLW disposal capacity if present capacity is exceeded. Further, operators may store LLW onsite as long as they retain their NRC licenses. In the event that disposal capacity is not available to a licensee at some time in the future, the licensee could store the waste onsite until a disposal pathway is identified.

The environmental impacts from the management and disposal of LLW are addressed in Sections 4.15 and 5.15 of the GEIS for at-reactor and away-from-reactor continued storage, respectively. These sections describe estimates of LLW volumes that would be generated during all three timeframes considered in the GEIS and demonstrate that environmental impacts of LLW management and disposal would be SMALL.

One comment noted that NUREG–1307 (NRC 2013r) indicates that some facilities do not have access to LLW disposal facilities. The analysis for NUREG–1307 was performed prior to and does not reflect the opening of the Texas compact waste disposal facility at the Waste Control Specialists, LLC, site in Andrews County, Texas, on April 27, 2012. The facility can accept waste for disposal from individual generators outside the Texas Low-Level Radioactive Waste Disposal Compact states of Texas and Vermont. Clarifying text has been added to Section 3.14.1 of the GEIS concerning LLW disposal availability for sites not located in compact states.

The NRC disagrees with the comment stating that the NRC should analyze the possibility that a disposal facility might not be available unless the Federal government ensures one is available. The GEIS currently evaluates the environmental impacts from LLW waste management and disposal associated with the continued storage of spent fuel for short-term, long-term, and indefinite timeframes. The private or government ownership of LLW disposal facilities would not affect the environmental impact determination in the GEIS.

Concerning the comment about potential impacts on the Ogallala Aquifer by the LLW disposal facility operated by Waste Control Specialists, LLC: The Texas Compact Waste Facility disposal site is owned and licensed by the State of Texas (an Agreement State). Information related to the licensing of this facility is available at http://www.tceq.texas.gov/permitting/radmat/licensing/wcs_license_app.html/#licenseandamend and the environmental analysis (labeled as draft, because a final version had not been published as of May 2014) that was developed as part of the State's licensing process can be found here: http://www.tceq.texas.gov/assets/public/permitting/rad/wcs/final_draft_ea.pdf. Because this comment relates to the impacts of a specific low-level waste disposal facility, and not to the impacts of LLW storage at reactor sites or at away-from-reactor spent fuel storage sites, it is outside the scope of the GEIS and Rule. No changes were made to the Rule as a result of these comments.

The NRC recognizes that there are costs associated with management and disposal of LLW. Chapter 2 of the GEIS has been updated to include information about the costs of continued storage, including the costs of replacing storage and handling facilities (see Section 2.2.2.2 of the GEIS).

(711-12) (783-2-13) (783-3-14) (783-1-17) (867-2-19) (867-3-9) (919-3-6)

D.2.32.8 – COMMENT: A commenter stated that the GEIS needs to provide more information about the onsite management of LLW, specifically noting that any onsite compaction activities and onsite storage of such wastes need to be addressed. The commenter stated that the NRC does not have a sufficient basis to say that LLW disposal capacity will be available when needed and that wastes would need to be stored onsite longer than anticipated in the GEIS. The commenter cited failed LLW disposal compacts and the time needed to site and license a new disposal site. The commenter stated that the NRC should reassess the public and occupational health impacts to be consistent with the expanded discussion of onsite LLW management.

RESPONSE: The NRC disagrees with the comment. As stated in the GEIS, the environmental impacts from the management and disposal of LLW and the associated public and occupational health impacts during continued storage would be SMALL. For this short-term timeframe, the NRC based its analysis on the evaluation in the License Renewal GEIS (NRC 2013m) where the impacts for an additional 20 years of operation were determined to be SMALL during normal reactor operation. The evaluation in the License Renewal GEIS (NRC 2013m) included impacts from the management and onsite storage of LLW. The amount of LLW generated annually during the short-term timeframe is expected to be a small fraction of the LLW generated annually by normal operation and refurbishing activities at a reactor site during the licensed period of operation. Therefore the impact associated with the continued onsite management and storage of LLW during the short-term timeframe would also be SMALL.

During continued storage in the long-term and indefinite timeframes, the NRC estimated the amounts of LLW that would be generated by replacement of spent fuel storage facilities, which is assumed to occur once every 100 years. The LLW generated by replacing at-reactor storage facilities would be a small fraction of the LLW generated during reactor decommissioning, which was determined to have a SMALL impact in the License Renewal GEIS (NRC 2013m). The LLW generated by replacing the larger away-from-reactor storage facilities would be comparable to the LLW generated during reactor decommissioning. Therefore, the impact associated with the continued onsite management and storage of LLW during the long-term and indefinite timeframes would also be SMALL.

The NRC disagrees that the availability of LLW disposal capacity is uncertain because the NRC believes that sufficient LLW disposal and storage capacity will become available when needed. For more detail see Section D.2.32.7 of this appendix.

Clarifying text has been added to Section 4.15 of the GEIS concerning the onsite storage of LLW. No changes were made to the Rule as a result of this comment.

(913-11)

D.2.32.9 – COMMENT: A commenter stated that waste of any kind must be handled in accordance with requirements at the Federal, State, and local levels in order to protect air and water resources. The commenter stated also that radioactive waste has received little attention and that elected and appointed officials need to find a solution for storing these wastes.

RESPONSE: The NRC agrees in part and disagrees in part with the comment. The NRC agrees that all wastes need to be properly managed so that exposure to the public and environment is minimized. However, the NRC does not agree that a solution for storing radioactive wastes still needs to be found, because the NRC currently regulates radioactive waste storage to ensure that it provides adequate protection. As discussed in Section 4.15 of the GEIS, all wastes, including radioactive wastes, generated at NRC-regulated facilities are required be handled, stored, transported, and disposed of according to local, State, and Federal requirements. No changes were made to the GEIS or Rule as a result of this comment.

(85-1)

D.2.32.10 – COMMENT: Commenters expressed concern about how scrap metal and other materials containing residual amounts of radioactivity may be released and could be used to manufacture new goods. One of the commenters noted that large quantities of metal generated from the decommissioning of nuclear power plants will be decontaminated and released for use in making new products. Another commenter stated that, at Big Rock Point Nuclear Power Plant in Michigan, LLW was disposed of in a local municipal landfill. The commenter stated that such “clearance level” or “below regulatory concern” exemptions permitted by the NRC are unacceptable. A third commenter referred to a 2012 incident in which items such as bicycle

baskets, tissue holders, and pet food bowls were manufactured overseas using radioactive metals, distributed in the U.S., and subsequently pulled from the U.S. market.

RESPONSE: The NRC agrees in part with the comments and disagrees in part. NRC regulations are in place to ensure that NRC licensees maintain adequate control over NRC-licensed radioactive material. Specifically, the regulations in 10 CFR Part 20 (Standards for Protection against Radiation) contain requirements for controlling radioactive material to limit the potential exposure to workers, members of the public, and the environment. The regulations also require the additional limitation of those exposures to levels that are ALARA.

Nuclear power plant licensees that want to dispose of radioactively contaminated materials (e.g., concrete, metals, soil, equipment, and trash) as a result of decommissioning or other activity must comply with 10 CFR Part 20 requirements. In general, 10 CFR Part 20 does not provide for the release of materials from nuclear power plants for unrestricted use or recycling that are known to be contaminated with licensed radioactive material. Instead, the NRC's policy on releasing potentially contaminated material is addressed in several guidance documents, and the NRC conducts detailed case-by-case reviews of all proposals by nuclear power plant licensees to dispose of radioactively contaminated materials. An overview of the NRC's policy on releasing materials is contained in Section 15.11 of NUREG–1757, Vol. 1, Rev. 2 (NRC 2006b). As stated in NUREG–1757, reactor licensees typically follow an approach that was established in two documents: Office of Inspection and Enforcement Circular 81-07, "Control of Radioactively Contaminated Material" (NRC 1981), addresses the control of surface contamination and the sensitivity of detection equipment used in performing surveys and Information Notice 85-92, "Survey of Wastes before Disposal from Nuclear Reactor Facilities" (NRC 1985) contains guidance on what constitutes a good radiation monitoring program. No changes were made to the GEIS or Rule as a result of these comments.

The Big Rock Point Nuclear Power Plant reactor decommissioning process, which is outside the scope of this proceeding, provides an illustration of how a licensee may receive NRC approval, in a manner consistent with the process described above, to dispose of licensable material in a facility other than a LLW facility. In the case of Big Rock Point, the plant licensee requested NRC approval in 2001 to dispose of potentially contaminated demolition debris at a Michigan-licensed landfill in accordance with 10 CFR 20.2002 (which provides that a licensee may apply to the NRC for approval to dispose of licensed material in a manner not otherwise authorized in NRC's regulations). The NRC approved the request in 2002 and an update to that request in 2005. The licensee's activities to ensure compliance with NRC requirements included survey processes using highly sensitive detection equipment at the site; monitoring of onsite activities by an independent, certified health physicist; ensuring strict control over the movement of trucks carrying debris from the site; and using a detector at the receiving landfill. More information about this specific example is provided in the NRC's EA for this action (NRC 2001c).

The comments also expressed concern about radioactively contaminated consumer products. This topic is not within the scope of the GEIS because it is not related to the continued storage of spent fuel. However, the NRC understands the sensitivity of this issue and is providing a response to these comments. The NRC only issues licenses for legitimate uses of radioactive material in consumer products (e.g., watches with tritium dials). The NRC does not issue licenses for any use of radioactive material where there is no apparent legitimate reason or benefit from the product containing radioactive material. Regarding foreign manufacture, the NRC has no regulatory authority over the manufacture of foreign products. The U.S. Customs and Border Protection (CBP) within the Department of Homeland Security is the Agency responsible for detecting these products at the border. More information about this topic can be found at the CBP's website: http://www.cbp.gov/ and in the CBP fact sheet: http://www.cbp.gov/sites/default/files/documents/japan_fact_sheets_2.pdf. No changes were made to the GEIS or Rule as a result of these comments.

(327-22-1) (381-12) (711-13) (919-6-2)

D.2.32.11 – COMMENT: A commenter referred to a sentence in Section 3.14.5 of the GEIS that states, "Waste-minimization techniques employed by the licensees may include source reduction and recycling of materials either onsite or offsite." The commenter expressed concern about this statement with regard to hazardous wastes, asking what form the recycled hazardous wastes would take, what the risks to people and the environment would be, and whether the motivation for recycling hazardous wastes is to save money on disposal costs.

RESPONSE: The techniques, products, and motivations for the recycling of waste materials are beyond the scope of the GEIS and Rule. The statement of concern in the GEIS applies to all wastes. This includes hazardous wastes (e.g., used oil and solvents) and non-hazardous wastes (e.g., paper, cans, and bottles). As stated in the GEIS, waste generators must manage hazardous wastes in accordance with applicable Federal and State regulations, including shipment of the waste offsite for disposal or recycling at licensed facilities. Further, as the GEIS states, the establishment of a waste-minimization program is a requirement for managing hazardous wastes, specifically under the Resource Conservation and Recovery Act. No changes were made to the GEIS or Rule as a result of this comment.

(919-6-3)

D.2.33 Comments Concerning Transportation

D.2.33.1 – COMMENT: A commenter noted the GEIS combines a large number of transportation studies of various kinds including analyses from 1972 and 1975. The commenter suggested the 1972 (AEC 1972) and 1975 (NRC 1977a) analyses need to be updated because the Interstate Commerce Commission has been replaced by the Surface Transportation Board. The commenter also disagreed with assumptions about institutional controls and compliance with transportation regulations and requested a reexamination. Past transportation incidents were

described to support assertions that regulations are inadequate or not being followed. These incidents included a radioactive materials truck on Interstate 80 driving during icy conditions, which the commenter claimed was a violation of regulations. The commenter referenced the Federal Motor Carrier Safety Administration (part of the U.S. Department of Transportation) stating that judgments about weather conditions are left to professional truck drivers, State, and local officials. The commenter also described a November 1996 accident in Nebraska involving a tractor trailer carrying two nuclear warheads that overturned in icy conditions. The commenter asserted State officials raised concerns about DOE compliance with protocols for advanced notice of shipments and about the remote location of the route. The commenter alleged the DOE had removed radiation monitors from the shipment prior to the accident. The commenter suggested these events show lax enforcement of transportation regulations that contradicts the assumption in the draft GEIS of compliance with regulations. Another commenter claimed transportation regulations were not protecting the public. The commenter described the case of an August 22, 2013 fire on a truck carrying radioactive materials. The commenter claimed the fire was not required to be reported to the NRC and asserted that other such unreported incidents could be occurring. Other transportation anecdotes were provided by a commenter concerned about eliminating the risk of accidents, terrorism, and release of radioactive material during transport. In one case the commenter had witnessed a truck carrying radioactive cargo that had no visible security or escort. Another case involved a radioactive material truck shipment that the commenter claimed “sprang a leak” during re-fueling and no security or escort. The commenter was not specific about what had leaked from the truck. Another case involved claims that radiation was measured at the roadside by citizens with Geiger counters from passing trucks carrying waste from a decommissioned power plant. The commenter also mentioned the widely reported case of a truck stolen in Mexico that was carrying a sealed source and claimed there was no security.

RESPONSE: The NRC disagrees with the comments. While a number of prior NRC or NRC-sponsored transportation analyses are referenced in the GEIS, the cited studies collectively represent a large body of technical work that supports the conclusions in the GEIS. Because later analyses build on earlier works, it is appropriate and relevant to cite the applicable prior studies rather than just the most recent analyses. In general, the later analyses of transportation risks have confirmed that earlier studies were conservative and overestimated risks. The most recent GEIS reference to an NRC-sponsored analysis of spent fuel transportation risks involved current methods and data and concluded that risks are SMALL.

Regarding comments that the GEIS assumptions about regulatory compliance with transportation regulations are invalidated by alleged noncompliance or accidents, the NRC finds the information provided by commenters insufficient to support these claims. Accidents involving radioactive materials shipments are rare and the NRC, in cooperation with the U.S. Department of Transportation (DOT), takes compliance with its regulations seriously through the implementation of regular inspection and, as needed, enforcement actions. In addition, some of the examples of incidents provided by commenters do not appear to have any particular

relevance to continued storage transportation activities or the GEIS (e.g., shipments of nuclear warheads, radioactive materials transportation in Mexico, and a mechanical truck fire that did not cause a traffic accident or affect the payload of unspecified radioactive materials).

A wide variety of radioactive materials are shipped in the United States each year. The transportation regulations have been developed to match the level of hazard presented by the material to be shipped. In this regard, both the NRC and DOT packaging and transport regulations (10 CFR Parts 71 and 49 CFR 107, 171—180, 390—397, as appropriate to the mode of transport) become more stringent as the potential risk of the shipped material increases. This approach helps to ensure the radiation dose from any accident would not pose a serious health risk. Additional information on the safety of radioactive material transportation is provided in Section D.2.33.21 of this appendix. In addition, the use of physical protection during shipments, as required by 10 CFR Part 73, is limited to the small proportion of radioactive material shipments that warrant such protection, such as spent fuel shipments. Therefore, it would not be unusual to observe a truck shipment that was labeled radioactive that did not have a special security escort. No changes were made to the GEIS or Rule as a result of these comments.

(45-3-2) (45-3-3) (45-3-4) (174-13) (329-34-2) (377-2-3) (381-8)

D.2.33.2 – COMMENT: A few commenters expressed concern about the GEIS assumptions used to support the conclusions about the risks of radioactive material transportation. One commenter stated that radiological doses in the GEIS seem to be based on an assumption that there will be only external exposures to radioactive materials and that there would be no contamination, for example, on the outside of a shipping container. Another commenter expressed the view that NRC ignored dangerous and costly transportation risks including loading and unloading; health, environmental, and financial risks onsite and along the route; as well as train and truck accidents and, in particular, accidents involving fire from fuel.

RESPONSE: The NRC disagrees with the comments. The concern expressed in the comment that the GEIS only considers external exposures has misinterpreted the GEIS transportation impact analysis. The GEIS transportation analysis is not based only on the stated assumptions described in the comment. The GEIS analysis is based on applicable and significant exposure pathways for both incident-free (normal conditions; no accidents) and accident transportation conditions.

The referenced dose analyses that supported the evaluation of transportation conditions when accidents do not occur, assume compliance with all applicable regulations. Under these conditions, the only radiation exposure to the public and workers from transportation of spent fuel would be direct radiation from the package because there would be no release of radioactive materials. The referenced analyses of accident conditions involving spent fuel shipments consider accidents of varying severity, weighted by their probability of occurrence, to

calculate risk. Rare but severe accidents in these analyses result in modeled releases of radioactive material from the package and public dose from released material in air and deposited to the ground surface. Accident risk calculations consider direct radiation from the packaged spent fuel that would occur from loss of package shielding. The scenario suggested by the comment assuming radiological contamination on the outside of the package under normal transport conditions is considered unlikely. NRC licensees are required to conduct surface radiation surveys prior to shipment. These surveys would detect external radiation that, if identified, would be removed prior to shipment. Section 3.15 of the GEIS describes the populations that would be affected by radioactive materials transportation including members of the public that could be exposed to radiation emitted from the packaged material during normal transportation and workers that are involved in transportation activities. Referenced transportation analyses in Chapters 4, 5, and 6 of the GEIS consider exposures to workers involved in package handling; the consequences and risks of train and truck accidents, including land contamination; cost of cleanup; and consideration of accidents involving fire from fuel. No changes were made to the GEIS or Rule as a result of these comments.

(45-3-1) (377-6-5)

D.2.33.3 – COMMENT: One commenter referred to a May 2013 report by the American Transportation Research Institute that stated that in 2010 there were 35,000 large truck accidents in the United States. The commenter stated that if 0.001 percent of these accidents were trucks transporting spent fuel, there would be 35 accidents per year. The commenter further noted that just one worst-case accident involving a spent fuel package breach, fire, and subsequent release of radioactive material would contaminate land, streams, animals, and people, including those in traffic along the route. The commenter added that such an accident would be deadly and cause the accident location to be uninhabitable for decades.

RESPONSE: The NRC disagrees with the comment. Because the likelihood of getting into an accident is proportional to the number of vehicle miles traveled, it is important to consider accident rates that include miles traveled. The most recent transportation risk analysis referenced in the GEIS (NUREG–2125, NRC 2014d) considered accident frequency data as recorded by the DOT and reported by the Bureau of Transportation Statistics for large truck accidents and freight rail accidents from 1996 through 2007. The resulting accident rates were 0.0019 accidents per 1,000 large truck kilometers (0.0031 accidents per 1,000 large truck miles) and 0.00011 accidents per 1,000 railcar kilometers (0.00018 accidents per 1,000 railcar miles). However, only a subset of all accidents would have significant consequences and were therefore of interest in the analysis. The analysis of the effects of probable accidents on truck transportation packages resulted in no releases of spent fuel. A subset of severe rail accidents that included collisions with hard rock or equivalent at impact speeds greater than 97 kph (60 mph) sufficient to cause a release of radioactive material. The calculated conditional probability of a radioactive materials release from impact was calculated using common event tree

methods for a specific rail cask as 5.1E-10. Whether these accidents happen depend on the likelihood (conditional probability) of the accident scenario as well as on accident frequency, which would be weighted by the estimated vehicle miles traveled for the spent fuel shipments. Therefore, the chance of a spent fuel transportation accident of sufficient severity to cause a release is very small and results in low calculated accident risks. Using the previously mentioned accident rate for rail (0.00011 accidents per 1,000 railcar kilometers) and the conditional probability of the accident involving release of 5.1E-10, the chance of having such an accident would be the product of these numbers or 5.6E-14 per 1,000 railcar kilometers traveled. These details were not included in the GEIS because they were adequately described in the referenced report. No changes were made to the GEIS or Rule as a result of this comment.

(250-49-4)

D.2.33.4 – COMMENT: A commenter expressed concerns about transportation accidents involving fire or terrorist attacks. The commenter stated that fire can mobilize and transport radioactive material in the air causing downwind inhalation exposures that could cause cancer or genetic defects. Specifically, the commenter expressed concern about the potential for spent fuel to self-ignite and burn uncontrollably. The commenter mentioned that numerous scientific experts have expressed concern about the effect of a burning fire on zircaloy cladding resulting in an exothermic reaction. The commenter noted shipping containers are designed for a 30-minute fire at a temperature of 1,475°F. They referred to Nuclear Energy Institute (NEI) package testing involving a 2,000°F fire for 90 minutes as inadequate noting that rail fires can burn for hours and can burn hotter. The commenter described a case on August 22, 2013, where a truck carrying radioactive material in Ohio caught fire and therefore suggested that radioactive material transportation is not safe.

RESPONSE: The NRC disagrees with the comment's concern about the risks of a transportation accident involving a fire for the reasons stated below. Comments concerning environmental impacts of terrorist attacks are addressed in Section D.2.36 of this appendix.

The GEIS transportation impact analyses reference a recent NRC transportation risk analysis, NUREG–2125 (NRC 2014d) in Sections 5.16 and 6.14.15. NUREG–2125 (NRC 2014d) includes a detailed analysis of the risks of spent fuel transportation including analyses of the impacts of postulated fire conditions on various transportation casks. This study used computer codes capable of modeling both fire behavior and the thermal responses of casks engulfed in or adjacent to those fires to analyze the response of the transportation casks to three different fire configurations. The fire configurations included those based on NRC cask test criteria and fuel spill fires engulfing the cask or with the cask at various distances from the fire. To estimate the duration of the fires, all of the fuel in a rail tank car or tanker truck was released and assumed to form a pool with the dimensions of a regulatory pool fire for the casks analyzed. None of the fire accidents investigated in this study resulted in a release of radioactive material. NUREG–2125

(NRC 2014d) also provides additional information that addresses the differences between maximum fire temperatures in a real fire with non-uniform heating and the uniform heating that is considered in regulatory tests.

The comment did not provide sufficient information for the NRC to understand what conditions involving the transportation of spent fuel were expected to cause spent fuel cladding to catch fire. The circumstances involving the potential for spent fuel to undergo this type of runaway exothermic oxidation reaction during storage in spent fuel pools are evaluated in Appendix F of the GEIS. No changes were made to the GEIS or Rule as a result of this comment.

(377-2-6)

D.2.33.5 – COMMENT: Commenters asked whether transportation of radioactive waste establishes away-from-reactor storage sites for spent fuel and thus initiates transportation of tens of thousands of casks of dangerous spent fuel on roads and railways for the benefit of the nuclear power industry while endangering health and safety of millions.

RESPONSE: The NRC disagrees with the comments that the transportation of radioactive waste establishes away-from-reactor storage sites. An away-from-reactor storage facility similar to the type of facility evaluated in Chapter 5 of the GEIS would have to be proposed by an applicant seeking a license from the NRC. The NRC would only grant a license for that facility after completing a thorough licensing review that evaluates compliance with NRC regulations and satisfies NRC's NEPA obligations. An away-from-reactor commercial spent fuel storage facility would need an NRC license prior to receiving shipments of spent fuel for storage. The safety of radioactive material transportation is addressed in Section D.2.33.21 of this appendix. No changes were made to the GEIS or Rule as a result of the comments.

(189-1) (250-30-1)

D.2.33.6 – COMMENT: A number of commenters expressed concerns with the condition of transportation infrastructure including railroads, bridges, and roads. Potentially hazardous road conditions (e.g., sharp turns) on local roads were also mentioned as potential contributors to accidents. Commenters were concerned that degraded infrastructure and generally hazardous road conditions would increase the risk of accidents to unacceptable levels and therefore expressed the view that transportation of nuclear waste should not be allowed. One commenter claimed that degraded infrastructure made accidents inevitable. Other commenters cited Pennsylvania as an example, and noted that the governor said roads and bridges in the state are crumbling. Commenters noted press reports indicating two of every five Pennsylvania bridges are structurally deficient or functionally obsolete. One commenter referred to an American Society of Civil Engineers report that reported half of Pennsylvania major urban roads in poor or mediocre condition. In addition, lack of funding in Pennsylvania for infrastructure improvements was noted as a related concern. A commenter asked what would happen if

radioactive waste transportation were involved in past bridge collapse events. Another commenter recommended track inspections prior to rail shipments of radioactive materials.

RESPONSE: The NRC disagrees with the comments. The NRC is aware of and understands concerns about aging transportation infrastructure, which have been widely reported. While challenges remain in addressing specific parts of the nation's aging infrastructure, the NRC has reasonably concluded that radioactive materials can be transported safely based on existing safety practices and regulations. Railroads, for example, have track-maintenance and inspection programs necessary for continued economic viability and therefore, the NRC has reasonably concluded that it is unlikely that the rail infrastructure would be allowed to degrade to a point where safety would be significantly affected.

In the unlikely event an accident does occur, the layered system of NRC and DOT safety requirements in 10 CFR Parts 71 and 73, and 49 CFR Parts 107, 171—180, 390—397, as appropriate to the mode of transport (e.g., testing and approval of packaging, proper placarding and labeling, limiting the dose rate from packages and conveyances, approved routing for shipments of spent fuel, safeguarding, and incident reporting [See Section D.2.33.21 of this appendix]) provide additional protection of the public to limit the potential consequences. The transportation risk analyses referenced in the GEIS, use state-of-the-art methods to account for the probability of accidents of different severities and the response of the package under modeled accident conditions. Regarding potential infrastructure effects, the most recent transportation risk analysis (i.e., NUREG–2125 [NRC 2014d]) which is referenced in the GEIS, evaluates the consequence of an elevated highway collapsing directly on a spent fuel transportation package. This accident was similar to conditions experienced during the 1989 San Francisco earthquake. The analysis assumed that the cask was lying directly on the roadway (negating the cushioning effect of the trailer and impact limiters) and a main beam of the elevated freeway fell and hit the middle of the cask. Stresses in the cask and damage to the beam were evaluated and no loss of containment was observed for this scenario. These and other analyses referenced in the GEIS consistently show that the accident risks from transportation of spent fuel are extremely low. No changes were made to the GEIS or Rule as a result of these comments.

(30-14-3) (249-11) (329-19-5) (329-3-6) (377-3-3) (377-2-4)

D.2.33.7 – COMMENT: One commenter noted that the GEIS does not discuss transportation of high-burnup fuel or how this fuel would be transported to offsite locations.

RESPONSE: The NRC agrees in part and disagrees in part with the comment. The referenced risk analyses supporting the transportation impact conclusions of the GEIS in Chapters 5 and 6 considered the impacts of transporting high-burnup spent fuel. For example, the referenced transportation risk analysis in NUREG/CR–6672 (Sprung et al. 2000) quantitatively evaluated the risks of transporting spent fuel with burnups up to 60 GWD/MTU. The referenced

transportation risk analysis in NUREG–2125 (NRC 2014d) also included a general discussion of the effect higher burnup rates would have on the results of the quantitative analyses that were based on low-burnup spent fuel. That discussion explained that high-burnup spent fuel would likely be cooled for longer periods and would have to meet the same external dose rate limits, so thermal and dose rate properties would not change. In addition, NUREG–2125 (NRC 2014d) stated that the forces involved in the modeled severe accidents were sufficient to fail cladding regardless of burnup; therefore, the modeled loss of confinement functions of cladding when subjected to severe accident forces would exist regardless of burnup. Some radionuclides in the inventory were expected to increase in high-burnup spent fuel although data were limited to evaluate the release fractions for high-burnup fuel. Overall, based on the expected changes to inventory alone, NUREG–2125 (NRC 2014d) noted the transportation accident radionuclide releases for high-burnup spent fuel would increase relative to the low-burnup fuels that were evaluated quantitatively in the study; however, the increase was not considered sufficient to alter the conclusions of the study that radiological impacts from spent fuel transportation conducted in compliance with NRC regulations are low. The NRC's current understanding is that additional information on the mechanical properties of cooled high-burnup fuel would be needed to accurately quantify the accident fuel-rod-to-package release fractions and the resulting effect on transportation accident risks and NRC continues to monitor technical developments in this area of research. While there is uncertainty regarding these fuel rod-to-package release fractions, the NRC-certified package, which must comply with the same 10 CFR Part 71 package approval standards whether used for high- or low-burnup spent fuel, is the primary barrier against the release of radioactive material in the event of a transportation accident. In addition, as described in NUREG–2125, the probability that an accident would occur with sufficient force to damage a transportation package and cause a release is very low and the corresponding transportation accident risk is also low. The details of these referenced risk assessments were not described in the GEIS because they were adequately described in the source documents.

In response to this and other comments about high-burnup fuel, additional information about high-burnup fuel, including how it is transported, is provided in the GEIS as a new Appendix I. No changes were made to the Rule as a result of this comment.

(246-5-2)

D.2.33.8 – COMMENT: A commenter noted that Section 6.3.2.4 of the GEIS, which is a subsection of the description of past, present, and reasonably foreseeable actions for the cumulative impact assessment, briefly describes transportation of spent fuel for disposal and assumes that it would occur. The commenter expressed the view that because no dry cask is currently licensed to transport high-burnup fuel, the GEIS must discuss any potential licensing challenges for high-burnup fuel and the possibility that this fuel might never leave its storage location.

RESPONSE: The NRC disagrees with the comment. The NRC has certified packages for transportation of high-burnup fuel, therefore, the recommended revisions to the GEIS are not needed. The NRC approves designs only after a full safety review. Based on these reviews, the NRC has certified package designs to transport high-burnup fuel currently in storage at ISFSIs. Examples of packagings are the NAC-UMS (71-9270), HI-STAR 100 (71-9261), and MP-197 (71-9302), which are certified to transport high-burnup fuel that is currently being stored. Tables G-4 and G-5 in Appendix G of the GEIS have been revised to include the associated transportation package, and to indicate whether systems are approved for use with high-burnup spent fuel. Additionally, a new Appendix I has been added to the GEIS to provide more information on high-burnup fuel, including transportation and casks that have been certified for transportation of high-burnup fuel. No changes were made to the Rule as a result of this comment.

(619-2-3)

D.2.33.9 – COMMENT: Several commenters expressed the view that the GEIS does not adequately assess transportation impacts after long-term storage of spent fuel. They suggested the transportation impact assessment is limited primarily to a generic assessment of the inconsequential impacts associated with the construction of DTSs and replacement of dry cask storage facilities. The commenter described the GEIS as relying on previous studies to evaluate the impacts from spent fuel transportation; however, the commenter noted that many of the studies are dated (e.g., the AEC 1972 and NRC 1977a analyses) and did not consider spent fuel degradation issues (e.g., stress-corrosion cracking, embrittlement, and swelling of fuel pellets) identified in an NRC report on information needs for long-term storage assessment. They expressed the view that the integrity of cladding and components of the spent fuel assemblies are important for ensuring safety of transportation. Another commenter stated that the evaluation of transportation impacts approach defers to generic findings in 10 CFR 51.52, Table S-4, additional NRC risk analyses completed subsequent to Table S-4, and analysis done for the PFS Site in Utah. The commenter expressed the view that the cited studies were finalized after consideration of public comments. The commenter added that there is no basis to reconsider the determinations documented in Table S-4.

RESPONSE: The NRC disagrees with the comments. While additional studies may be issued in the future on spent fuel degradation issues, NEPA only requires an agency to use currently available information in its environmental analyses. The GEIS transportation impact analyses were based on several referenced transportation risk assessments. The earliest analysis supported the generic findings in 10 CFR 51.52, Table S-4. These generic findings were incorporated by reference into the GEIS where applicable and this use does not entail any reconsideration of the determinations documented in Table S-4 as suggested by a comment. The most recent transportation risk analysis referenced in the GEIS was completed in 2013 (NRC 2014d). That study did not evaluate long-term spent fuel degradation but did consider

unlikely severe accidents that would be sufficient to cause a release of radioactive material. Overall, the conclusions from these risk assessments indicate that transportation risks and impacts are SMALL.

The GEIS impact analyses also assume that aging management programs would be maintained over the long-term and indefinite storage timeframes (when fuel is expected to be stored in dry cask systems) prior to transportation. As described in Section 2.2.1.3 of the GEIS, in accordance with 10 CFR 72.42, ISFSI license renewal applications must include, among other things: (1) time-limited aging analyses that demonstrate that structures, systems, and components important to safety will continue to perform their intended safety function for the requested period of extended operation and (2) a description of the aging management program for management of issues associated with aging that could adversely affect structures, systems, and components important to safety. Similar aging analysis and management requirements apply to general ISFSI licensees as part of storage cask CoC renewals, for more information see Section D.2.38.3 of this appendix. These requirements enhance confidence that spent fuel including bare fuel, fuel in canisters, or damaged fuel that has been reinforced by canning or end-capping and stored in dry casks could be retrieved for repackaging, if needed, or for transportation. Additional information about aging management programs and transportation is provided in Section D.2.33.10 of this appendix. Discussion of issues related to handling damaged fuel are located in Section D.2.17.4 of this appendix. Additional clarifications to descriptions of spent fuel degradation and aging management programs were added to Section B.3.2.1 of the GEIS in response to this and other comments. No changes were made to the Rule as a result of these comments.

(459-1) (459-6) (827-7-27) (827-7-28)

D.2.33.10 – COMMENT: One commenter repeated comments submitted during scoping that requested that the NRC integrate the systems components of the nuclear power industry, including its nuclear wastes and components of the spent fuel transportation system, into the GEIS to produce a useful and meaningful analysis. An example of this integration was considering that some sites may not have space to build a DTS or a dry cask replacement facility.

RESPONSE: The NRC disagrees with the comment. The GEIS analyses are based on an integrated understanding of the systems related to management of spent fuel including wastes and components of the spent fuel transportation system. For example, the DTS assumption was incorporated, in part, to address the need to transfer fuel from storage-only casks into transportation-approved casks. The availability of land area to accommodate the construction of a DTS or an ISFSI is addressed in Section D.2.17.3 of this appendix. No changes were made to the GEIS or Rule as a result of this comment.

(459-3)

D.2.33.11 – COMMENT: One commenter stated that the analysis of transportation impacts of away-from-reactor storage "misses the mark" (citing Section ES.13.2.16 of the GEIS). The commenter suggested including an analysis of the associated risks including but not limited to a discussion of the various canisters that are to be used for such transportation, the transfer into those casks, and the risks of the transport.

RESPONSE: The NRC disagrees with the comment. The public and occupational health and transportation impact analyses in Sections 5.17 and 5.16 of the GEIS, respectively, incorporate the results of prior impact analyses that assess the impacts of fuel cask handling and transfer operations as well as incident-free and accident impacts of spent fuel transportation. The cask handling impact analysis was based on using a specific cask and canister system that is expected to provide a reasonable representation of the handling doses to workers. The most recent transportation impact analysis referenced in the GEIS is NUREG–2125 (NRC 2014d). This analysis evaluated a variety of available cask designs, then selected three specific designs for use in the detailed risk analyses. The detailed analysis considered rail and truck casks, two of which involved inner welded canisters with fuel and one with no inner canister around the fuel. While the results of the risk analysis varied depending on the cask that was used, all casks resulted in low risks that were protective of public health and safety. The transportation risk results from NUREG–2125 (NRC 2014d) and other studies were referenced in Section 5.16 of the GEIS. The details of these supporting analyses were not repeated in the GEIS because the information was adequately described in the referenced documents. No changes were made to the GEIS or Rule as a result of this comment.

(783-1-18)

D.2.33.12 – COMMENT: A commenter noted that spent fuel is easier to transport if its temperature is above 427°C (800°F) because zirconium cladding is more ductile above that temperature. However, they further noted that transporting fuel that is above 427°C (800°F) would be more damaging because it would also have higher radioactivity when compared to older fuel that has allowed some time for radioactive decay to reduce radioactivity.

RESPONSE: The NRC agrees in part and disagrees in part with the comment. The NRC agrees, in general, that higher temperatures would increase the ductility of cladding. In addition, the NRC is aware of concerns regarding potential detrimental effects of hydride reorientation on zirconium cladding behavior as high-burnup fuel cools. These effects include reduced ductility which makes cladding more brittle. Should spent fuel cladding become more brittle, greater care could be required during handling and transportation. An important factor with this process that relates to the comment about temperature is the ductile-to-brittle transition temperature (DBTT) which has been previously described by the NRC (2012h). That report noted cladding with radial hydrides will undergo a ductile-to-brittle transition somewhere in the temperature range of approximately 21 to 200°C (70 to 392°F). The actual temperature would depend on the stress and temperature under which the radial hydrides were formed, the particular cladding

alloy, and its initial cold work state. While additional investigation is needed, the NRC determined that the effects are not evident if the material remains above the DBTT (NRC 2012h), which is well below the 427°C (800°F) temperature cited in the comment. Therefore, the concerns of the comment about ductility apply to a lower temperature range than cited in the comment.

As described in Section 2.2.1.2 of the GEIS, the temperature of spent fuel decreases over time during pool storage prior to being transferred into dry cask storage. NRC guidance regarding dry cask storage recommends a maximum cladding temperature of 400°C (752°F) and a dry inert atmosphere to reduce the potential for significant degradation. This dry cask storage maximum cladding temperature is well above the DBTT range of approximately 21 to 200°C (70 to 392°F). The projected cladding temperature for high-burnup spent fuel in dry storage casks remains above 200°C (392°F) beyond 40 years of storage (EPRI 2007a). Therefore, the temperature of fuel transported after years of continued storage would be bounded by this maximum value of 400°C (752°F) and would remain above the reported DBTT range for at least several decades. If the spent fuel needs to be stored long enough that the cladding temperature would be within the DBTT range, then degradation would be possible. During storage, required aging analyses and management programs (see Section D.2.33.9 of this appendix) would be conducted to demonstrate that structures, systems, and components important to safety will continue to perform their intended safety functions. If these analyses concluded that spent fuel safety functions would not be met, the NRC could require corrective actions to maintain the fuel-specific safety functions (e.g., handling as damaged fuel, which the NRC addresses in Section D.2.17.4 of this appendix and in revisions to Section 2.2.2.1 of the GEIS). In addition, a description of research involving the effects of hydride reorientation on the ductility of cladding is included in the new Appendix I on high-burnup fuel.

(562-8)

D.2.33.13 – COMMENT: Two commenters noted that Chapter 3 of the GEIS (Affected Environment) did not sufficiently identify site-specific issues that should be addressed on a case-by-case basis. They provided an example of draft GEIS text from Section 3.15 (Transportation) that states “Local and regional transportation networks in the vicinity of nuclear power plant sites may vary considerably depending on the regional population density, location, and size of local communities, nature of economic development patterns, location of the region relative to interregional transportation corridors, and land surface features, such as mountains, rivers, and lakes.” The commenters noted this text was an example of an impact where generic treatment was insufficient.

RESPONSE: The NRC disagrees with the comments. While the affected environment for transportation may vary at specific sites (Section 3.15 of the GEIS), transportation activities that are associated with continued storage are limited, as described in Sections 4.16, and 5.16 of the GEIS. Therefore, the direct and indirect transportation impacts of continued storage are

generally SMALL (MODERATE in the case of away-from-reactor storage facility construction) regardless of the location. There are uncertainties regarding future conditions at sites during continued storage; nevertheless, because the activities associated with transportation are limited and well-understood, a generic analysis of the impacts of transportation is possible. In addition, the cumulative impact analysis in Section 6.4.15 of the GEIS considers the effect of past, present, and reasonably foreseeable future actions in the vicinity of power plants based, in part, on conditions surrounding power plant sites and concludes SMALL to MODERATE transportation impacts. Based on inherent temporal uncertainties that exist whether the continued storage analyses were conducted site-specifically or generically, the NRC expects that a site-specific continued storage cumulative impact analysis would be unlikely to result in impact conclusions with different ranges than determined in the GEIS cumulative impact analysis as described further in Section D.2.41.1 of this appendix. Therefore, a generic approach to evaluating the cumulative transportation impacts of continued storage is also appropriate. No changes were made to the GEIS or Rule as a result of these comments.

(836-50) (930-3-2)

D.2.33.14 – COMMENT: A commenter recommended that the NRC remove Chapter 5 of the GEIS (Environmental Impacts of Away-from-Reactor-Storage) because this storage option does not satisfy the NRC's ALARA standard. The commenter claimed the risks from the additional transportation that would be needed (i.e., transport of spent fuel from power plant to storage and from storage to disposal rather than direct transport from power plant to disposal) are unnecessary. The additional risks were described as including traffic accidents, theft, and contamination of virgin land. The commenter claimed transportation was not well controlled and provided an example where radiation emitted from a passing truck was measured in Amarillo, Texas at several hundred counts-per-minute as the truck passed and expressed concern for public exposures along the route. The commenter acknowledged that there could be circumstances where maintaining the safety of spent fuel would require that the fuel be moved; however, that commenter recommended each case be evaluated separately for risks and benefits. The commenter further expressed the view that fuel should not be moved merely for the convenience of the plant operators.

RESPONSE: The NRC disagrees with the comments. As described in Section 1.3 of the GEIS, the GEIS assesses and discloses the environmental impacts of continued storage of spent fuel, but does not authorize storage of spent fuel. The impact analysis for away-from-reactor continued storage in Chapter 5 of the GEIS provides insights into the potential impacts of away-from-reactor storage, including risks of transportation accidents; however, any future license applications for away-from-reactor facilities would involve additional site-specific NRC safety and environmental reviews. ALARA is defined in 10 CFR 20.1003 and is incorporated into the NRC radiation protection regulations applicable to NRC licensees. In reviewing any future proposed away-from-reactor storage facility, the NRC would consider whether the proposed

activities would comply with the applicable 10 CFR Part 20 requirements for maintaining exposures in accordance with ALARA. The results of these site-specific safety and environmental reviews would be considered in making any future licensing decision for an away-from-reactor storage facility.

With respect to the comment that transportation of radioactive materials is not adequately regulated, and the accompanying example cited (i.e., measuring radiation from a passing radioactive materials shipment), insufficient information was provided for the NRC to evaluate whether the specific information reported was accurate. However, the DOT radioactive materials regulations limit the allowable radiation dose rate from a truck carrying radioactive materials to a level that is above the ambient background radiation dose rate. Therefore, it would not be unusual for a person to measure an increased dose rate for the instant that a truck compliant with existing regulations passes a point. Because, in this example, the duration of the exposure is low (on the order of a few seconds) the total dose received is still low despite the elevated dose rate coming from the truck. The transportation risk analyses referenced in Sections 4.16, 5.16, and 6.4.15 of the GEIS incorporate these regulatory limits into calculations of public doses for various shipping scenarios and these analyses consistently conclude that the resulting doses are low and the regulations are protective of public health and safety. No changes were made to the GEIS or Rule as a result of this comment.

(410-24)

D.2.33.15 – COMMENT: Two commenters expressed concerns about transportation cask integrity under accident conditions. A commenter expressed concerns about the effects of underwater submersion of a loaded spent fuel transportation cask on the integrity of the cask and the potential for release of radioactive material to waterways that are a source of drinking water. Specifically, the commenter expressed concern about the potential for criticality if the cask were submerged or overheating if a cask were buried in river sediments. The commenter cited an unspecified document that describes the potential for criticality in a submerged dry cask and noted that the DOE had previously planned to use 453 barge shipments as part of the proposed transportation of spent fuel from power plants to a proposed HLW repository at Yucca Mountain. The commenter supported the criticality concerns by referring to a September 1999 criticality accident at a nuclear fuel factory in Japan that caused fatalities and public and worker radiation doses. The commenter also expressed concerns about the adequacy of NRC transportation package design criteria and required tests. The commenter asserted the required package tests were inadequate because they did not require full-scale tests. Regarding water submersion tests, the commenter noted a damaged cask was required to be submerged in 0.9 m (3 ft) of water for 8 hours and an undamaged cask submerged in 656 ft of water for 1 hour. The commenter questioned the extent of package damage assumed for tests and the relevance of the test conditions to expected accident conditions, in particular, whether it would take more than 1 hour to retrieve a submerged cask from a river bottom. The commenter also noted that

the depth of Lake Michigan exceeds the 656 ft required by tests at locations not far from DOE-proposed shipping routes. Another commenter provided a brief statement about the irony of package testing. The NRC interpreted the statement to mean that the commenter was suggesting that transportation package testing for accident conditions—including tests required by the NRC (e.g., free drop, water immersion, crush, and high-temperature tests) do not meet the commenter's expectations for actual accident conditions. The commenter also mentioned high-speed crashes of packages into concrete barriers do not meet expectations for actual accident conditions.

RESPONSE: The NRC disagrees with the comments. Transportation of spent fuel by barge is an uncommon method of transportation that is applicable to a small number of reactor sites where spent fuel would be stored. Therefore, the GEIS did not explicitly evaluate or describe the impacts of barge transportation. However, the impacts of barge transportation, including accidents, were evaluated in NUREG–75/038 (NRC 1975), the generic impact analysis supporting Table S-4 and cited in 10 CFR 51.52, and in Sections 4.16, 5.16, and 6.4.15 of the GEIS. NUREG–75/038 found barge transportation impacts to be less than the impacts calculated for both rail or truck transport. Additional description of the multiple layers of requirements that directly address credible safety-related concerns including accidents is provided in D.2.33.21.

Regarding concerns about potentially hazardous transportation route conditions, DOT regulations allow States or Tribes to review and approve routing for spent fuel shipments. A State has to approve shipment routes before the route can be used, which ensures routes for spent fuel transportation avoid locations where unsafe conditions of travel could be encountered. In addition, depending on whether the spent fuel is shipped by an NRC licensee or the DOE, the NRC or the DOE would inspect the shipping plans and equipment to verify compliance with applicable regulations. Regarding the criticality concerns, spent fuel transportation casks are certified by the NRC based, in part, on an analysis that demonstrates they would remain subcritical if flooded with unborated water. Comments on the adequacy of NRC regulations are beyond the scope of the GEIS. No changes were made to the GEIS or Rule as a result of these comments.

(250-46-5) (919-1-15)

D.2.33.16 – COMMENT: One commenter asserted that spent fuel currently stored in dry casks cannot be transported because most of the canisters are not licensed for transportation. Another commenter recommended that Section 2.1.2.2, pages 2-14, lines 1-9 of the draft GEIS should state that the NRC has not designated any casks for transportation. Accordingly, the commenter requested that prior to transportation the NRC require licensees to transfer all spent fuel to transportation casks. Another commenter asserted that casks approved by the NRC for

onsite storage are not safe for transportation and therefore are not safe under environmental conditions that require moving casks from the onsite location to a more secure location (e.g., sea-level rise, severe flooding).

RESPONSE: The NRC disagrees with the comments. As discussed in Section 2.1.2.2 of the GEIS, spent fuel may be stored in casks and canisters that are licensed for storage only or for both storage and transportation. Both types of cask certification are acceptable for storage provided they meet NRC requirements. As described in Section 6.3.2.3 of the GEIS, prior to transportation, spent fuel stored in casks approved only for storage must ultimately be transferred into casks approved for transportation. Section 2.1.4 of the GEIS describes how a DTS or equivalent capability would facilitate reconfiguration of the spent fuel to meet transportation requirements. The NRC has certified specific cask and canister systems for both storage and transportation. An example of this is the Holtec Hi-Star 100 rail cask that was included in the NUREG–2125 (NRC 2014d) transportation risk assessment cited in Chapters 5 and 6 of the GEIS. The cask is currently being used for dry storage and is certified for transportation. Changes in the design of storage systems (that do not require NRC approval under existing storage certification requirements) after a CoC for transportation is issued by NRC or the need to meet specific conditions of the transportation compliance certification may require additional NRC reviews prior to use of a specific cask or canister for transportation.

Regarding the assertion that storage-only casks are not safe because they cannot be moved in the event of flooding or sea-level rise, the impacts of climate change including flooding were evaluated in Section 4.18.2.2 of the GEIS and the NRC concluded, based on the relatively slow rate of changes in flood risk over time, that any regulatory action that may be necessary will be taken in a timely manner to ensure the safety of dry cask storage systems. No changes were made to the GEIS or Rule as a result of these comments.

(86-3) (246-30-3) (783-2-15)

D.2.33.17 – COMMENT: Two commenters provided comments on national transportation impacts. One commenter noted that the GEIS transportation analyses considers transportation only within the vicinity of the reactor or interim storage sites, for example, commuting workers and supply shipments. The commenter suggested the limited scope of the analysis is the reason for concluding impacts would be SMALL to MODERATE. For shipments in the vicinity of a site, the commenter asserted that the impacts of an overweight truck or large-load rail shipments, in particular traveling on sub-par infrastructure, are not considered. In addition, the commenter noted that the short-term and long-term timeframe analyses presume eventual large-scale transportation of spent fuel; however, the commenter claimed the analyses appear to ignore the major impacts of national-scale transportation of spent fuel from all reactor sites. The commenter asserted that large-scale national transportation of spent fuel is the result of

many site-specific licensing decisions and that it has not been demonstrated in the United States. Therefore, the commenter noted, the formulation of the GEIS does not warrant ignoring this impact.

Another commenter noted that a generic analysis misses the transportation-related issues associated with a real-world facility. Examples provided included a site with no rail access having to use heavy-haul trucks to transport spent fuel; and site-specific geographic barriers that limit use of heavy-haul trucks and increase transportation links, modes, and facilities required to move spent fuel. The commenter noted these types of site-specific transportation-related barriers require specific planning and need to be sufficiently described to evaluate the impacts on the environment, social structures, politics, and socioeconomics (e.g., costs). The commenter added that risks for such shipments rise as the number of transfers increase and the failure to recognize these site-specific realities is a critical mistake in the use of a generic analytical approach.

RESPONSE: The NRC disagrees with the comments. The affected environment and impact analysis in the GEIS consider impacts from transportation activities that include local, regional, and national geographic areas of influence. Traffic impacts, for example, have a localized area of influence. For radiological impacts, the affected environment for the GEIS transportation impact analysis (Section 3.15) includes workers and members of the public living along regional and national routes, using these transportation routes, and using stops that are within range of exposure to radiation emitted from the packaged material during normal transportation activities. This analysis also includes people that could be exposed in the unlikely event of a severe accident involving release of radioactive material.

Transportation risk assessments referenced in the GEIS impact analysis evaluate exposure scenarios consistent with the affected environment and the scope of the analysis. Because the GEIS will support individual licensing actions for power reactors, the focus of the impact analysis is on the continued storage transportation impacts associated with an individual facility and not a larger population of facilities (e.g., national scale) as recommended by the comment.

The direct and indirect impact analyses in Sections 4.16 and 5.16 of the GEIS is limited to transportation activities associated with continued storage. For example, the at-reactor analysis does not consider transportation of spent fuel, but does consider workers commuting and limited operational waste shipments. In contrast, away-from-reactor storage would require spent fuel shipments to a storage facility; therefore, the GEIS evaluates impacts of cross-country transportation from reactors to a storage facility. The referenced risk analysis in Section 5.16 of the GEIS applies a representative route approach using conservative assumptions that bound the potential variation in impacts associated with evaluating different site-specific mode configurations (e.g., heavy-haul truck with intermodal rail transfer). The rail accident analysis assumes four casks per train with each cask conservatively assumed to simultaneously experience the same accident forces during an accident. This is conservative because rail car

spacing between cask cars would place casks at different locations in the train. The cumulative analysis in Section 6.4.15 of the GEIS considers additional uranium fuel cycle transportation impacts and the impacts from the reactor's cross-country shipments of spent fuel to a repository for disposal. Therefore, the transportation impact analyses in the GEIS evaluate impacts beyond a localized area of influence. In addition, conservative assumptions and methods in some analyses broadly encompass the variability in impacts expected from site-specific transportation options consistent with a generic impact analysis approach.

The comment's suggestion to evaluate spent fuel transportation impacts from all reactors on a national scale goes beyond the scope of the GEIS based on the individual reactor licensing focus that is described in Section 1.0 of the GEIS. In addition, a comment response addressing degraded transportation infrastructure issues is provided in Section D.2.33.6 of this appendix. No changes were made to the GEIS or Rule as a result of these comments.

(505-3) (867-3-15)

D.2.33.18 – COMMENT: Various commenters expressed the view that a national spent fuel repository would create new and complex transportation safety problems for the nation. They noted opening a national repository would result in tens of thousands of spent fuel and other waste shipments across the United States. These and other commenters expressed concerns about accidents or terrorism in states where spent fuel would be transported. A few commenters referred to transportation of spent fuel to a repository as "mobile Chernobyl" in reference to a historic nuclear reactor accident involving large radioactive material releases in Ukraine. Some commenters asked whether the emergency evacuation plans required for nuclear power plants should also be applied to transportation corridors. They further asked whether the increased threat to national security is worth the cost or risks to public safety.

One commenter questioned the effectiveness of transportation security and described a case where a train carrying nuclear waste was boarded by escaping prison inmates. The commenter claimed the largest casks carry 200 Hiroshima bombs of "radiological equivalent". The commenter was concerned that armed terrorists could board a train and cause problems. The commenter expressed concerns about the potential for shipments to be attacked by planes filled with jet fuel, missiles, or bombs that could cause fires that could facilitate radioactive material releases. The commenter noted that U.S. Army testing has demonstrated that transportation casks can be penetrated by missile attack but did not reference any specific reports.

RESPONSE: The NRC disagrees with the comments. National-scale impacts from spent fuel transportation to a repository are beyond the scope of the GEIS and Rule, which evaluate the continued storage impacts applicable to an individual reactor licensing action. In addition, the GEIS cumulative impact analysis considers the additional impacts of reasonably foreseeable past, present, and future actions that would overlap in both space and time and accumulate with the impacts from continued storage at an individual storage facility. Therefore, the

transportation impacts from shipping the stored fuel from the individual power plant site or away-from-reactor storage facility to a repository are considered in Section 6.4.15 of the GEIS. As described in Section 1.8.4 of the GEIS, the environmental impacts of a specific geologic repository will be addressed in the EIS that the DOE is required to submit for any geologic repository application that it submits.

Regarding the safety of spent fuel transportation, NRC and DOT regulations in 10 CFR Part 71 provide for rigorous standards for the design and construction of shipment casks to ensure safe and secure transport of their hazardous contents. Casks must meet extremely demanding standards to ensure their integrity in the most severe conditions. In addition, after September 11, 2001, the NRC issued Orders to licensees requiring increased security in the transportation of specific types of radioactive materials, including spent fuel shipments. These Orders and other additional security requirements were incorporated into a 2013 rulemaking (78 FR 29520) that amended the NRC regulations for the physical protection of irradiated reactor fuel in transit in 10 CFR Part 73. NRC and DOT regulations in 10 CFR Parts 71 and 73 and 49 CFR 107, 171—180, 390—397, as appropriate to the mode of transport require spent fuel shippers to use approved routing, apply safeguarding measures, including the use of armed escorts and emergency response plans. The transportation risk analyses referenced in the GEIS consistently show that the accident risks from transportation of spent fuel are extremely low. Additional information about the safety of radioactive material shipments is provided in Section D.2.33.21 of this appendix. No changes were made to the GEIS or Rule as a result of these comments.

(64-5) (112-10-4) (290-2) (326-14-2) (329-15-3) (348-2) (352-2) (373-2) (377-2-5) (454-9) (573-1)

D.2.33.19 – COMMENT: A commenter provided for NRC consideration a bibliography of publications that provide information and analysis related to the transportation topics evaluated in the draft GEIS. The list includes Transportation of Commercial Spent Nuclear Fuel: Regulatory Issues Resolution (EPRI 2010b); Criticality Risks During Transportation of Spent Nuclear Fuel. Revision 1 (EPRI 2008); Fuel Relocation Effects for Transportation Packages (EPRI 2007b); Spent-fuel Transportation Applications, Normal Conditions of Transport (EPRI 2007a); Spent Fuel Transportation Applications—Assessment of Cladding Performance (EPRI 2007c); Assessment of Accident Risk for Transport of Spent Nuclear Fuel to Yucca Mountain Using RADTRAN 5.5 (EPRI 2006a); Summary of the NAS Report, *Going the Distance? The Safe Transport of Spent Nuclear Fuel and High-Level Radioactive Waste in the United States* (EPRI 2006b); and Spent Nuclear Fuel Transportation—An Overview (EPRI 2004a).

RESPONSE: The NRC agrees in part with the comments. The NRC has evaluated the references identified in the comment and found no information that would change the impact conclusions of the transportation impact analyses in the GEIS. The reports referenced in the comment provide additional relevant supplemental information on a wide variety of topics

related to transportation that are addressed in the GEIS. The transportation impact analyses are already supported by a several referenced analyses, the NRC did not identify any need for this additional information, and the commenter did not identify or suggest that any specific additional information was needed in the GEIS in the comment. No changes were made to the GEIS or Rule as a result of these comments.

(379-10) (379-11) (379-12) (379-9)

D.2.33.20 – COMMENT: A commenter asserted property values would decline along spent fuel transportation routes and that such impacts have been documented in several states including New Mexico, Colorado, Tennessee, Washington, and Ohio. In particular, they noted residents that live along routes would be exposed to frequent shipments of large amounts of spent fuel transported to away-from-reactor storage facilities. They mentioned a recent DOE study that estimated over 800 adult cancer fatalities from radiation emitted from trucks. They further asserted that homeowners insurance does not cover radiological incidents or accidents in most cases and suggested there is uncertainty regarding who would reimburse parties affected by a nuclear waste transportation accident. Specific concerns included widespread loss of property and livelihood from the release of radioactive materials from an accident or terrorist attack. The commenter cited unspecified studies by DOE and NRC to support a claim that a severe transportation accident could contaminate an area of 42 mi^2 for a year at an economic cost of $2 billion. The commenter further noted several issues of concern (i.e., the industry would not be responsible for damages after the spent fuel leaves the power plant site; inadequate State budgets; the Price-Anderson Act does not cover nuclear waste transportation accidents; and the current Congress is unlikely to pay damages [citing the experience with Hurricane Sandy emergency aid]). They further suggested that health insurance may not cover some illnesses related to long-term radiological-related illness caused by a transportation accident. They expressed concern about the economic consequences of a release of radioactive material from a transportation accident. An additional concern was expressed that local rights of States are being challenged regarding their ability to oppose nuclear waste transportation through their communities.

RESPONSE: The NRC disagrees with the comments. Several transportation risk analyses referenced in the GEIS have concluded that the accident risks from transportation of spent fuel are extremely low. Additional information about the safety of radioactive material transportation under incident-free and accident conditions is provided in Sections D.2.33.18 and D.2.33.21 of this appendix. The comment refers to the results of unspecified DOE and NRC analyses asserting transportation impacts involving widespread dispersal of radioactive materials without providing any context for the information provided. Contrary to the position taken in the comment, liability claims from members of the public for personal injury and property damage in the event of a severe accident or terrorist attack involving transportation of spent fuel or nuclear waste from a licensed reactor are covered by the Price-Anderson Act (2005). Funds provided to

pay Price-Anderson Act claims come from annual premiums paid by all reactor licensees. If these funds were depleted after a nuclear incident occurred, then Congress would determine whether additional disaster relief is required. Additional information about the Price-Anderson Act is provided on the NRC website at http://www.nrc.gov/reading-rm/doc-collections/fact-sheets/funds-fs.pdf.

Regarding the potential for economic effects including a decline in property values along transportation routes, the GEIS did not address any public stigma-related socioeconomic impacts related specifically to the transportation of radioactive materials. In addition, as described further in Section D.2.22.3 of this appendix, the NRC concludes that perception-based chilling effects and stigma-related impacts are uncertain or speculative and do not need to be considered in this GEIS. While the potential for stigma-related socioeconomic impacts is more plausible in the unlikely event of a severe accident involving a release of radioactive materials, the risk of a severe transportation accident that would cause a release is very low, and therefore the risks associated with any impacts conditional on that accident occurring are also low.

The comment also raised concerns about the passage of State laws affecting local municipalities' ability to oppose nuclear waste transportation through their communities. These matters are beyond the scope of the GEIS and Rule. No changes were made to the GEIS or Rule as a result of these comments.

(329-3-8) (377-3-1) (377-2-10) (377-2-12) (377-2-13) (377-2-15)

D.2.33.21 – COMMENT: Commenters provided concerns and opinions about (1) the safety of radioactive material transportation including the potential for accidents and release of radioactive materials, (2) how radioactive waste should be shipped to a disposal or storage site or (3) whether such shipments should be allowed at all.

Regarding safety concerns, commenters expressed the view that transportation risks were greater than onsite storage risks and noted transportation of spent fuel is subject to error, accidents, collisions, terrorism, mechanical breakdowns, degraded infrastructure, spills, inadequate security, and inexperienced hazardous material personnel and limited emergency response capabilities in remote areas. Some commenters referred to thousands of shipments on roads, rails, and waterways that would be needed as unnecessary and irresponsible. They objected to shipping spent fuel to temporary offsite storage facilities claiming it would require more transportation than moving spent fuel directly to a disposal facility. They noted this additional transportation would involve additional radiation exposures to people along the routes, increased risks, increased accidents, and increased financial risks including cost to taxpayers. A number of commenters were concerned about new and unique local transportation risks to various locales such as Illinois, Maryland, Pennsylvania, Tennessee, the District of Columbia, and the Savannah River Site.

Commenters expressed concerns about accidents from various causes including earthquakes and severe weather such as tornadoes, hurricanes, high temperatures, and snow and ice. Other commenters noted the number of annual traffic fatalities or accidents, unspecified prior NRC or DOE transportation risk studies, or asserted a history of accidents that indicate a lack of safety for transporting waste. One commenter, citing unspecified studies, argued that the number of accidents would increase with the number of shipments. They noted thousands of shipments would cause hundreds of accidents resulting in high and potentially lethal doses, elevated cancer risks, land contamination of a large (50-mi) area, and large economic consequences (citing a figure of $2 billion from an unspecified 1980 DOE report). The commenter claimed the fact that accidents would occur during transportation refutes NRC studies that claim transportation is safe. Another commenter was concerned that an increase in fracking from natural gas development would increase earthquakes and affect transportation. Commenters were concerned that transporting large volumes of waste during an earthquake would have catastrophic consequences. One commenter asserted that even without accidents, radioactive elements are not being contained by the equipment used to ship materials. Another commenter suggested even a low-speed accident could cause a release of radioactive material. Commenters also noted terrorist attacks with planes, missiles, or bombs could ignite transport vehicles, causing fires that release radiation. Some commenters claimed that even undamaged transportation casks could present significant risks because they lack shielding to prevent gamma and x-ray radiation from escaping.

Other commenters expressed assurance of the safety of transportation. One commenter described the experience of participating in a spent fuel shipment and noted the care and skill demonstrated in conducting the shipment and coordination with State and local law-enforcement authorities. Another commenter noted that 3,000 spent fuel shipments covering over 1.7 million mi had been safely completed in the United States.

Commenters provided numerous recommendations on how radioactive wastes can be transported, (e.g., using lead-lined containers and limiting shipments to short distances). One objected to the secrecy involved in transporting nuclear waste. Other commenters recommended limiting risks to the public by funding dedicated transportation infrastructure for radioactive waste, revising regulations, using military escorts for fuel shipments, or requiring an EIS and opportunity for public comment for all spent fuel transportation.

Some commenters objected to spent fuel being transported through their cities, states, and major metropolitan areas. Other commenters requested prohibiting spent fuel transportation altogether (favoring onsite storage). Another commenter suggested waste should not be transported until a capability for immediate emergency response is available. Another commenter requested prohibiting transportation of radioactive waste on rivers.

RESPONSE: NRC agrees in part and disagrees in part with the comments.

The NRC agrees with the comments that an away-from-reactor storage facility requiring additional transportation, and therefore additional radiation doses and risks relative to at-reactor storage, would result in increases in doses and risk, however, as indicated by the transportation impact analysis results for a such a facility reported in Section 5.16 of the GEIS, the magnitude of the increase would be low and therefore the radiological impacts would continue to be small.

The NRC disagrees with the comments asserting that transportation of radioactive materials is unsafe or that applicable regulations are inadequate and should be revised. As described in Sections 4.16 and 5.16 of the GEIS, the transportation of radioactive waste and spent fuel must comply with NRC and DOT regulations. These regulations (10 CFR Parts 71 and 73, and 49 CFR 107, 171–180, 390–397, as appropriate to the mode of transport) protect public and worker safety by applying multiple layers of detailed requirements that directly address the credible safety-related concerns expressed in the comments including radiation exposures from normal transportation, accidents and their consequences, security and safeguards including terrorism, and emergency response. The requirements address safety through testing and approval of packaging to withstand normal and accident conditions during transport; proper placarding and labeling; limiting the dose rate from packages and conveyances; use of approved routing for shipments of spent fuel; safeguarding shipped materials, and incident reporting.

As the comments have noted, there are a wide variety of potential causes of transportation accidents. However, the likelihood of an accident that includes forces sufficient to breach a certified spent fuel transportation cask is very low and therefore the overall accident risk is low. Several prior NRC transportation risk analyses cited in the Sections 4.16, 5.16, and 6.4.15.2 of the GEIS include detailed transportation risk assessments that conclude the risks of transporting a reactor's radioactive waste and spent fuel under normal and accident conditions are small and that the regulations are adequate to ensure safety. In addition, regarding terrorist threats, the design of casks would make a release of radioactive materials from a terrorist attack extremely unlikely. After September 11, 2001, the NRC issued Orders to licensees to increase security in the transportation of specific types of radioactive materials, including spent fuel shipments. These Orders and other additional security requirements were incorporated into a 2013 rulemaking (78 FR 29520) that amended the NRC regulations in 10 CFR Part 73 for the physical protection of irradiated reactor fuel in transit.

Imposing additional controls, as suggested by the comments (e.g., more prescriptive routing restrictions and imposing distance limits on shipments) would require changes to national policy or existing regulations. Changes to the national policy for disposal of spent fuel or regulations governing waste disposal or transportation are separate actions that are beyond the scope of the GEIS and Rule. The comments expressing concerns about national-scale impacts of spent fuel transportation from all reactors goes beyond the scope of the GEIS based on the individual reactor licensing focus that is described in Section 1.0 of the GEIS.

Regarding comments about limited local emergency response capabilities and resources, emergency response in the unlikely event of an in-transit radioactive material transportation accident is a State responsibility, although first responders to accidents normally include local police or fire department. States will be notified by police and State representatives and in almost all cases will respond to emergencies. Therefore, response to accidents involves local responders but is not completely reliant on those responders to protect the health and safety of the public. No changes were made to the GEIS or Rule as a result of these comments.

(6-2) (12-2) (23-4) (45-3-5) (76-2) (80-1) (94-1) (143-6) (147-5) (158-3) (163-20-7) (177-3) (180-4) (196-5) (226-1) (228-1) (245-37-2) (245-29-3) (246-30-1) (246-13-2) (246-13-3) (246-16-6) (247-2) (250-50-3) (250-11-5) (250-39-5) (250-1-6) (252-5) (319-6) (325-18-2) (327-21-3) (329-6-1) (329-12-11) (329-21-2) (329-24-3) (329-3-4) (329-25-5) (329-3-5) (329-3-7) (368-4) (377-2-1) (377-2-11) (377-1-13) (377-2-2) (377-1-4) (377-2-7) (377-2-8) (381-11) (450-4) (492-2) (531-2-15) (539-1) (539-3) (552-1-11) (611-32) (628-2) (636-1) (698-2) (701-3) (719-5) (744-6) (786-2) (821-3) (834-5) (864-14) (864-6) (929-3) (936-6) (946-3) (963-2) (968-1) (970-1) (971-1) (988-1) (1000-2)

D.2.34 Comments Concerning Public and Occupational Health

D.2.34.1 – COMMENT: A commenter stated that the draft GEIS did not explain the direct radiation hazards posed by spent fuel. The commenter stated that the GEIS should include descriptions of the types of spent fuel, the amount of radionuclides contained in spent fuel, and the half-life of the contained radionuclides. The commenter believed this would support the assessment of radiological impacts over the different timeframes considered in the GEIS.

RESPONSE: The NRC disagrees with this comment. The GEIS does discuss public and occupational dose impacts related to the radiation hazards posed by the continued storage of spent fuel, specifically in Sections 4.17 and 5.17. Descriptions of the specific types of spent fuel considered in the GEIS are found in Section 2.1. For the reasons noted in that section, the NRC did not consider other types of spent fuel in this analysis. No changes were made to the GEIS or Rule as a result of this comment.

(244-15-2) (244-15-9)

D.2.34.2 – COMMENT: Several commenters stated that leaks of radioactive waste into the environment can cause environmental damage and human health effects. Commenters disagreed with the NRC's assumption that surface waterbodies near nuclear power plants are usually sufficiently large to ensure dilution of liquid effluents containing radioactive material. These commenters stated that radionuclides can become concentrated in biota far above levels present in the water. Some commenters stated that radioactive material released to the environment can result in environmental build-up over time. One commenter stated that scientific practices do not permit radioactive contamination leaks to continue unabated, but such unacceptable leaks are happening onsite at every reactor site in the country.

RESPONSE: The NRC disagrees with these comments. Although the GEIS does not explicitly consider the radiological impacts from environmental build-up in biota, the NRC believes that the radiation protection standards for humans, coupled with the monitoring of effluents, foodstuffs, and biota, are protective to non-human organisms. Several of the comments concerned with human health effects are addressed in Section D.2.34.11 of this appendix. Comments concerned with contamination due to leaks are addressed in Section D.2.40.1 of this appendix. No changes were made to the GEIS or Rule as a result of these comments.

(160-1) (163-28-6) (258-1) (377-5-19) (556-1-31) (681-8) (823-38) (919-7-15) (925-2)

D.2.34.3 – COMMENT: One commenter stated that the contribution of skyshine (i.e., radiation scattered by the atmosphere) to radiation exposures near ISFSIs should have been considered in the draft GEIS.

RESPONSE: The NRC agrees with this comment. The contribution of skyshine to radiation exposures was considered as part of the analysis in Sections 4.17 and 5.17 of the GEIS. No changes were made to the GEIS or Rule as a result of this comment.

(608-17)

D.2.34.4 – COMMENT: One commenter described the internal dosimetry and radiation health effects of tritium as the basis for why he believed that micro-dose calculation is important for assessing the carcinogenic potential of tritium decay in the human body. Another commenter described tritium as a special safety concern that the NRC has not dealt with sufficiently and stated that this is causing adverse health effects in people drinking water contaminated with tritium.

RESPONSE: The NRC disagrees with this comment. A discussion of tritium leaks from spent fuel pools during continued storage can be found in Section D.2.40.1 of this appendix.

The NRC has taken steps to address issues raised by tritium leaks from nuclear power plants. Nuclear power plants routinely and safely release dilute concentrations of tritiated water. These authorized releases are closely monitored by licensees and reported to the NRC. Information about these releases is made available to the public on the NRC's website. Recently, several instances of unintended, abnormal releases of radioactive liquids to the environment were identified. The NRC believes that all available information about those releases shows no threat to the public. In response to concerns about tritium in groundwater, nuclear power plants have instituted programs to minimize the potential for tritium leakage and have put in place more extensive groundwater monitoring programs. More information about tritium leakage can be

found at http://www.nrc.gov/reactors/operating/ops-experience/grndwtr-contam-tritium.html. No changes were made to the GEIS or Rule as a result of these comments.

(410-14) (823-39)

D.2.34.5 – COMMENT: Several commenters stated that NRC requirements do not consider the susceptibility of children, elderly, women, including pregnant women, and other sensitive groups to radiation-related disease. Among the other sensitive groups specifically mentioned by one commenter were people with hemochromatosis, a genetic defect in iron metabolism, and people with ataxia telangiectasia, an immunodeficiency disease. One commenter stated that the GEIS should not rely on the United Nations Scientific Committee on the Effects of Atomic Radiation report (UNSCEAR 2013) because it only utilized the probable effect of radiation released in the first week of the Fukushima meltdown.

RESPONSE: The NRC disagrees with these comments. The NRC has based its dose limits and dose calculations on a descriptive model of the human body referred to as “standard man.” However, the NRC has always recognized that dose limits and calculations based on “standard man” must be informed and adjusted in some cases for factors such as age and gender. For example, the NRC has different occupational dose limits for pregnant women workers once they have declared (i.e., made known) they are pregnant because the rapidly developing human fetus is more radiosensitive than an adult woman. NRC dose limits are also much lower for members of the public, including children and elderly people, than for adults who receive radiation exposure as part of their occupation. Finally, NRC dose calculation methods have always included age-specific dose factors for each radionuclide in order to consider the varied sensitivity to radiation exposure by infant, child, and teen bodies, which are also generally smaller than adult bodies. In addition, the calculation methods have always recognized that the diets (amounts of different kinds of food) of infants, children, and teens are different from those of adults (See NRC 1977b).

The amount of radioactive material released from nuclear facilities is well measured, well monitored, and known to be very small. The doses of radiation that are received by members of the public as a result of exposure to nuclear facilities are so low (i.e., less than a few millirem) that resulting cancers attributed to the radiation have not been observed and would not be expected. Finally, the NRC uses many sources of scientific study to ensure its regulations are protective. The NRC will not focus strictly on any one report such as the United Nations Scientific Committee on the Effects of Atomic Radiation report (UNSCEAR 2013) mentioned by one commenter. No changes were made to the GEIS or Rule as a result of these comments.

(35-6) (163-31-2) (245-17-1) (250-50-6) (410-32) (417-4) (556-1-30) (662-10) (711-28)

D.2.34.6 – COMMENT: A commenter asked whether aging management inspections and required corrective actions that are currently performed in spent fuel pools will be performed at onsite DTSs, and will these corrective actions impact public and occupational health impacts described in the GEIS.

RESPONSE: The aging management and corrective action programs currently required at licensed facilities will continue to be required of future licensees for onsite dry transfer and storage systems. A separate site-specific NEPA review will be conducted prior to the issuance of a license for a DTS. The environmental impacts from operations will be analyzed as part of that review. No changes were made to the GEIS or Rule as a result of these comments.

(913-9) (919-2-10)

D.2.34.7 – COMMENT: A commenter stated that consolidated (away-from-reactor) storage would increase worker radiation exposures at the power plant, during transportation, and at the consolidated storage site.

RESPONSE: The NRC disagrees with this comment. Radiation dose to workers at a future away-from-reactor facility will be monitored at that facility, at the originating reactor, and during transportation, in accordance with the NRC's dose requirements. Worker dose is regulated in accordance with 10 CFR Part 20 Standards for Radiation Protection. These requirements will continue to be enforced to maintain worker dose within limits and include ALARA requirements to maintain radiation exposures ALARA. No changes were made to the GEIS or Rule as a result of this comment.

(646-5)

D.2.34.8 – COMMENT: A commenter expressed concerns about the EPA's March 2013, *Protective Action Guides and Planning Guidance for Radiological Incidents: Draft for Interim Use and Public Comment* (EPA 2013), an update to EPA's 1992 PAG Manual. In particular, the commenter expressed a view that the updated PAG Manual has jettisoned the EPA's allowable risk values of 1 in 1,000,000 to 1 in 10,000. Another commenter, citing Japanese and U.S. Food and Drug Administration standards for radioactive material in food, stated that the U.S. allows certain levels of radioactive material in food that becomes contaminated as a result of leaking waste.

RESPONSE: The EPA's March 2013 draft protective action guides (EPA 2013) and standards by the U.S. Food and Drug Administration have no bearing on and are beyond the scope of the GEIS. No changes were made to the GEIS or Rule as a result of these comments.

(30-8-6) (325-21-2)

D.2.34.9 – COMMENT: A commenter provided a detailed description of the movement of radionuclides in the environment. The commenter described the transport of radionuclides from the point of release through food and drinking-water pathways, and stated that NRC risk estimates are based almost entirely on the external gamma and beta radiation, distributed uniformly over large areas, and largely ignore the multitude of specific risks due to in-situ radionuclide incorporation. The commenter also stated that NRC uses an artificially inflated number of 350 mR per year for natural background radiation to compare with man-made causes of radiation dose. The commenter stated that NRC should add the natural background dose to the dose from man-made sources before reaching a conclusion on health effects. The commenter stated his view that there is no threshold for a safe dose of radiation so any additional level of exposure can be expected to cause additional damage to health.

This commenter also disagreed with an assumption in the GEIS that MOX fuel is “substantially the same” as that from uranium fuel and stated that this assumption shows that the NRC has ignored the isotope composition of the spent fuel in its risk estimations.

RESPONSE: The NRC disagrees with these comments. Many of these comments are addressed in Section D.2.34.11 of this appendix—in particular the comments that relate to health effects and no threshold for safe dose. The NRC has determined that MOX fuel is appropriately considered within the scope of the GEIS. MOX fuel has been used in commercial nuclear reactors and is substantially similar to existing uranium oxide fuel for light water reactors. Therefore, the NRC’s analysis of the environmental impacts from continued storage of uranium oxide fuel also applies to MOX fuel. Section 2.1.1.3 of the GEIS discusses the fuels considered in the NRC analysis, including MOX fuel and fuel for integral pressurized water reactors.

With respect to the analysis in the GEIS, the NRC did consider the natural background dose and the dose from man-made sources in its analysis. Table 3-3 of the GEIS lists the annual average dose received by an individual from all sources of radiation including background radiation. The annual average dose received from nuclear fuel cycle operations is a very small percentage (approximately 0.1 percent) of the total background radiation. The NRC acknowledges that the natural background dose can vary greatly from one location to the next, but for analytical purposes the NRC uses a number that is close to the average annual exposure from natural background radiation.

With respect to how the NRC establishes it risk estimates, these comments are addressed in Section D.2.34.11 of this appendix—in particular the comments that relate to cancer studies, health effects, and no threshold for safe dose. No changes were made to the GEIS or Rule as a result of these comments.

(410-15) (410-16) (410-4) (410-5)

D.2.34.10 – COMMENT: Several commenters stated that the GEIS did not consider "epigenetics," the tendency for negative genetic health effects from radiation exposure to skip a generation, and then become permanent in successive generations.

Other commenters stated that the "ace in the hole" for the nuclear energy industry is the incubation period of radiation exposure, or the latency period between radiation dose and certain health effects. One commenter believes that the latency period ensures that one cannot prove that radiation health effects were caused by a nuclear power plant.

A few commenters expressed concern about the cumulative effect of radioactive effluents on human evolution and the human genome. One commenter questioned whether the NRC will calculate how much background radiation will increase from storing spent fuel as opposed to disposing of it in a geological repository.

Two commenters stated that continued storage is dangerous to future generations and should not be permitted. One commenter stated that the waste remains extremely dangerous for the next seven generations. Another commenter stated that the radionuclides contained in the waste are the most toxic substances on earth that create slow and long-term illness and mutated genes. This commenter stated that NRC has a duty to protect future generations and the environment from these effects and believes NRC does not take that duty seriously.

RESPONSE: The NRC disagrees with these comments. Genetic effects and the development of cancer are the primary health concerns attributed to radiation exposure. Genetic effects are the result of a mutation (DNA damage) produced in the reproductive cells of an exposed individual (male or female) that are passed on to their offspring. These effects may appear in the exposed person's direct offspring, or may appear several generations later, depending on whether the altered genes are dominant or recessive.

Although radiation-induced genetic effects have been observed in laboratory animals (given very high doses of radiation), no evidence of genetic effects has been observed among the children born to atomic bomb survivors from Hiroshima and Nagasaki. Based on extensive studies of the atomic bomb survivors, no evidence of the phenomenon mentioned in the comment has been reported. The risk estimates presented in BEIR VII report (National Research Council 2006) show that "at low or chronic doses of low linear energy transfer irradiation, the genetic risks are very small compared to the baseline frequencies of genetic diseases in the population." The doses of radiation that are received by members of the public as a result of exposure to nuclear power facilities are so low (i.e., less than a few millirem) that resulting genetic effects attributed to the cumulative effects of the combination of man-made and background radiation over many years have not been observed and would not be expected.

The NRC takes very seriously its responsibility under the AEA to protect the health and safety of the public in regulating the U.S. nuclear power industry. The NRC's mission is to protect the public health and safety and the environment from the effects of radiation from nuclear reactors, materials, and waste facilities. The NRC's regulatory limits for radiological protection are set to protect workers and the public from the harmful health effects (i.e., cancer and other biological impacts) of radiation on humans. The limits are based on the recommendations of standards-setting organizations. Radiation standards reflect extensive scientific study by national and international organizations. The NRC actively participates and monitors the work of other organizations to keep current on the latest trends in radiation protection. If the NRC determines that there is a need to revise its radiation protection regulations, it will initiate a rulemaking. Members of the public who believe that the NRC should revise or update its regulations may request that the NRC do so by submitting a petition for rulemaking. More information about the petition for rulemaking process can be found at: http://www.nrc.gov/about-nrc/regulatory/rulemaking/petition-rule.html. No changes were made to the GEIS or Rule as a result of these comments.

(30-14-6) (163-10-1) (326-23-2) (326-2-3) (348-14) (427-2) (430-1) (455-3) (496-12) (496-4) (617-8) (686-19) (844-8)

D.2.34.11 – COMMENT: Citing a number of national and international scientific authorities and reports, including the NAS, the International Commission on Radiological Protection, and the NRC, several commenters stated that the best science on radiation protection supports continued use of a linear no-threshold theory of radiation health effects. Many commenters, referring to the NAS report, *BEIR VII: Health Risks from Exposure to Low Levels of Ionizing Radiation*, stated that there is no threshold below which exposure to ionizing radiation has no effect on living cells. Many of these commenters also stated that these authorities support the view that there is no safe level of radiation dose. One commenter stated that the consequence of no safe level of radiation dose is that the radioactive material that was ejected from the Fukushima Dai-ichi spent pool fire, which commenters contend leaked into groundwater and spread around the region in both the atmosphere and ocean currents, has created a genetic legacy on marine and human life in Japan that will continue as long as life exists.

One commenter cited unspecified studies conducted a couple of decades ago that stated that any exposure to ionizing radiation harms people. The types of harm that the commenter described include changing the structures of blood cells, changing complete blood counts, fatigue, reduced cognitive sharpness, thyroid cancer, leukemia and other illnesses. The commenter also described genetic effects that do not appear until the third or fourth generation beyond exposure. The commenter is unaware of what fraction of these diseases are attributable to radiation dose, but believes that impacts and observed changes at any exposure level are observable in blood cell membranes and complete blood count. The commenter expressed the concern that ignoring these impacts on human health may have led to larger

impacts on biota, and recommends that environmental monitoring results be made available to any researcher. Another commenter stated concerns about transporting and storing spent fuel because he had observed health effects in veterans as a result of long-term radiation exposure.

Several commenters described severe detrimental health effects that they believe resulted from radiation exposure associated with working on nuclear reactors in the past or living near nuclear reactors and nuclear waste storage sites. Some commenters described cancer occurring years after small exposures and such injuries as birth defects, bleeding gums, and separated teeth.

Many commenters expressed general concerns about radiation doses and radiation health effects from continued storage of spent fuel, including one commenter who stated public and occupational health impacts should be changed from SMALL/MODERATE to LARGE for all timeframes. One commenter asked for a plain English explanation of the AEA phrase that requires the NRC to enforce standards that provide an adequate level of protection for public health and safety and the environment.

A number of commenters cited various reports and studies by individuals, the U.S. Centers for Disease Control and Prevention, and the New York State Cancer Registry Data that they claim support findings of increased rates of radiation-related disease around nuclear power plants. These reports and studies indicate higher rates of cancer incidence (e.g., myelogenous leukemia) around the Pilgrim and Indian Point nuclear power plants. One commenter stated that uranium mining creates cancer clusters and environmental degradation, including climate change, citing Crownpoint, New Mexico as an example. Another commenter, citing BEIR VII and unspecified previous nuclear worker studies, stated that the additional years of radiation exposure from continued storage in communities near formerly operating nuclear power plants will harm an already damaged population. Another commenter stated that the NRC should not move forward until the NAS completes a study on health impacts of radiation exposure. One commenter stated NRC failed to disclose controversial or opposing views from unspecified radiation and health studies that contradict NRC's conclusions.

RESPONSE: The NRC agrees in part and disagrees in part with these comments. The NRC's mission is to protect the public health and safety and the environment from the effects of radiation from nuclear reactors, materials, and waste facilities. The development of these responsibilities beginning with the AEA can be found on the NRC website at http://www.nrc.gov/about-nrc/history.html. The NRC's regulatory limits for radiological protection are set to protect workers and the public from the harmful health effects (i.e., cancer and other biological impacts) of radiation on humans. The limits are based on the recommendations of standards-setting organizations. Radiation standards reflect extensive scientific study by national and international organizations. The NRC actively participates in and monitors the work of these organizations to keep current on the latest trends in radiation protection. If the NRC determines that there is a need to revise its radiation protection regulations, it will initiate a rulemaking. Members of the public who believe that the NRC should

revise or update its regulations may request that the NRC do so by submitting a petition for rulemaking. More information on the petition for rulemaking process can be found at: http://www.nrc.gov/about-nrc/regulatory/rulemaking/petition-rule.html. The models recognized by the NRC for use by nuclear power reactors to calculate dose incorporate conservative assumptions and account for differences in gender and age to ensure that workers and members of the public are adequately protected from radiation. The NRC is currently in the process of updating 10 CFR Part 20 Standards for Radiation Protection and information about this process can be found at http://www.nrc.gov/about-nrc/regulatory/rulemaking/potential-rulemaking/opt-revise.html

BEIR VII is the seventh in a series of publications from the National Academies concerning radiation health effects, referred to as the Biological Effects of Ionizing Radiation (BEIR) reports. The BEIR VII report titled *Health Risks from Exposure to Low Levels of Ionizing Radiation: BEIR VII – Phase 2* (National Research Council 2006), focuses on the health effects of low levels of low linear energy transfer ionizing radiation. Low linear energy transfer radiation deposits less energy in the cell along the radiation path and is considered less destructive per radiation track than high linear energy transfer radiation. Examples of low linear energy transfer radiation, the subject of this report, include X-rays and γ-rays (gamma rays). Health effects of concern include cancer, hereditary diseases, and other effects, such as heart disease. The NRC accepts the linear, no-threshold dose-response model (see additional information at http://www.nrc.gov/about-nrc/radiation/health-effects/rad-exposure-cancer.html). The BEIR VII Committee concluded that the current scientific evidence is consistent with the hypothesis that there is a linear, no-threshold dose-response relationship between exposure to ionizing radiation and the development of cancer in humans. Having accepted this model, the NRC believes that this model is conservative when applied to workers and members of the public who are exposed to radiation from nuclear facilities. This is based on the fact that numerous epidemiological studies have not shown increased incidences of cancer at low doses. Some of these studies included: (1) the 1990 National Cancer Institute study (NCI 1990) of cancer mortality rates around 52 nuclear power plants, (2) the University of Pittsburgh study that found no link between radiation released during the 1979 accident at the Three Mile Island nuclear power station and cancer deaths among residents, and (3) the 2001 study performed by the Connecticut Academy of Sciences and Engineering that found no meaningful associations from exposures to radionuclides around the Haddam Neck nuclear power plant in Connecticut to the cancers studied. In addition, a position statement entitled “Radiation Risk in Perspective” by the Health Physics Society (August 2004) made the following points regarding radiological health effects: (1) Radiological health effects (primarily cancer) have been demonstrated in humans through epidemiological studies only at doses exceeding 5-10 rem delivered at high dose rates. Below this dose, estimation of adverse effect remains speculative. (2) Epidemiological studies have not demonstrated adverse health effects in individuals exposed to small doses (less than 10 rem delivered over a period of many years) (HPS 2004).

A number of comments stated that, based on the BEIR VII report, there is no safe dose of radiation. The NRC disagrees with this assertion; the BEIR VII report (National Research Council 2006) makes no such assertion that there is no safe level of exposure to radiation. Rather, the conclusions of the report are specific to estimating cancer risk. The report does not make any statements about "no safe level or threshold." However, the report did note that the "BEIR VII Committee said that the higher the dose, the greater the risk; the lower the dose, the lower the likelihood of harm to human health." Further, the report notes that "[t]he Committee maintains that other health effects, such as heart disease and stroke, occur at high radiation doses but that additional data must be gathered before an assessment of any possible dose response can be made of connections between low doses of radiation and non-cancer health effects." Although the linear, no-threshold model is still considered valid, the BEIR VII Committee concluded that the current scientific evidence is consistent with the hypothesis that there is a linear dose-response relationship between exposure to ionizing radiation and the development of radiation-induced solid cancers in humans. Further, the Committee concluded "that it is unlikely that a threshold exists for the induction of cancers but notes that the occurrence of radiation-induced cancers at low doses will be small."

Although radiation may cause cancers at high doses, currently there are no reputable scientifically conclusive data that unequivocally establish the occurrence of cancer following exposure to low doses (i.e., below about 10 rem [0.1 Sv]). However, radiation protection experts conservatively assume that any amount of radiation may pose some risk of causing cancer or a severe hereditary effect and that the risk is higher for higher radiation exposures. Therefore, a linear, no-threshold dose-response relationship is used to describe the relationship between radiation dose and adverse impacts such as incidents of cancer. Simply stated, in this model any increase in dose, no matter how small, results in an incremental increase in health risk. This theory is accepted by the NRC as a conservative model for estimating health risks from radiation exposure, recognizing that the model probably over-estimates those risks. Based on this theory, the NRC conservatively establishes limits for radioactive effluents and radiation exposures for workers and members of the public. Although the public dose limit in 10 CFR Part 20 is 100 mrem (1 mSv) for all facilities licensed by the NRC, the NRC has imposed additional constraints on nuclear power reactors. Each nuclear power reactor has enforceable license conditions that limit the total annual whole body dose to a member of the public outside the facility to 25 mrem (0.25 mSv). The amount of radioactive material released from nuclear power facilities is well measured, well monitored, and known to be very small. The doses of radiation that are received by members of the public as a result of exposure to nuclear power facilities are so low (i.e., less than a few millirem) that resulting cancers attributed to the radiation have not been observed and would not be expected. As stated in the GEIS, the NRC believes the public and occupational impacts will be small as defined by remaining within the above limits at all licensed facilities.

Although a number of studies of cancer incidence in the vicinity of nuclear power facilities have been conducted, no studies to date accepted by the scientific community show a correlation between radiation dose from nuclear power facilities and cancer incidence in the general public. The following is a list of some of the most recent radiation health studies that the NRC recognizes:

In 1990, at the request of Congress, the National Cancer Institute conducted a study of cancer mortality rates around 52 nuclear power plants and 10 other nuclear facilities. The study covered the period from 1950 to 1984, and evaluated the change in mortality rates before and during facility operations. The study concluded there was no evidence that nuclear facilities may be linked causally with excess deaths from leukemia or from other cancers in populations living nearby (NCI 1990).

In June 2000, investigators from the University of Pittsburgh found no link between radiation released during the 1979 accident at Three Mile Island power plant and cancer deaths among nearby residents. Their study followed 32,000 people who lived within 8 km (5 mi) of the plant at the time of the accident (Talbott et al. 2000).

The American Cancer Society in 2001 concluded that although reports about cancer clusters in some communities have raised public concern, studies show that clusters do not occur more often near nuclear plants than they do by chance elsewhere in the population. Likewise, there is no evidence that links strontium-90 with increases in breast cancer, prostate cancer, or childhood cancer rates. Radiation emissions from nuclear power plants are closely controlled and involve negligible levels of exposure for nearby communities (ACS 2001).

In 2000, the Illinois Department of Public Health compared childhood cancer statistics for counties with nuclear power plants to similar counties without nuclear plants and found no statistically significant difference (IDPH 2000).

The Connecticut Academy of Sciences and Engineering, in January 2001, issued a report on a study around the Haddam Neck nuclear power plant in Connecticut and concluded radiation emissions were so low as to be negligible and found no meaningful associations with the cancers studied (CASE 2001).

In 2001, the Florida Bureau of Environmental Epidemiology reviewed claims that there are striking increases in cancer rates in southeastern Florida counties caused by increased radiation exposures from nuclear power plants. However, using the same data to reconstruct the calculations, on which the claims were based, Florida officials were not able to identify unusually high rates of cancers in these counties compared with the rest of the state of Florida and the nation (FDOH 2001).

On April 7, 2010, the NRC announced that it asked the NAS to perform a state-of-the-art study on cancer risk for populations surrounding nuclear power facilities (NRC 2010c). The NAS has a broad range of medical and scientific experts who can provide the best available analysis of the complex issues involved in discussing cancer risk and commercial nuclear power plants. More information on its methods for performing studies is available at http://www.nationalacademies.org/studycommitteprocess.pdf.

The NAS study will update the 1990 U.S. National Institutes of Health National Cancer Institute report, *Cancer in Populations Living Near Nuclear Facilities* (NCI 1990). The study's objectives are to (1) evaluate whether cancer risk is different for populations living near nuclear power facilities; (2) include cancer occurrence; (3) develop an approach to assess cancer risk in geographic areas that are smaller than the county level; and (4) evaluate the study results in the context of offsite doses from normal reactor operations. Phase I of the NAS study report was published on March 29, 2012 and is available on the NAS website (http://www.nap.edu). No changes were made to the GEIS or Rule as a result of these comments.

(89-18) (163-28-2) (189-3) (189-4) (192-3) (192-5) (245-21-1) (245-38-1) (250-30-3) (250-31-3) (283-4) (292-2) (323-1) (325-31-3) (326-2-1) (326-56-4) (328-9-1) (329-34-3) (352-14) (450-9) (455-2) (478-3) (494-2) (496-5) (552-1-8) (556-1-29) (608-2) (611-13) (611-49) (670-6) (711-6) (713-10) (722-5) (762-3) (783-3-25) (823-22) (862-3) (862-9) (897-5-17) (919-6-5) (919-7-5) (919-7-6) (925-3) (935-4) (961-1) (973-1) (975-1)

D.2.34.12 – COMMENT: The NRC received several comments regarding effluent monitoring and environmental surveillance. One commenter stated that the NRC should require effluent monitoring and environmental surveillance in every town and city within 32 km (20 mi) of spent fuel storage facilities, and make the monitoring data available to the public in "real-time." Another commenter requested that the NRC fund a comprehensive, continuous, independent, citizen run radiation monitoring program. A commenter stated that the NRC should consider "appropriate radiological monitoring for the environment surrounding the storage facility" and that radiation protection standards should apply to an interim period of up to a 300 year storage period.

RESPONSE: The NRC disagrees with these comments. During facility operations, the NRC's requirements ensure that licensees monitor routine and inadvertent radioactive effluents discharged into the environment at all licensed facilities. Further, the NRC believes that these existing requirements and programs provide adequate protection of public health and safety and that no new effluent monitoring programs are required. NRC licensees are required to have a radiological environmental monitoring program. The radiological environmental monitoring program quantifies the environmental impacts associated with radioactive effluent releases from the licensed facility. No changes were made to the GEIS or Rule as a result of these comments.

(325-31-5) (534-7) (611-55)

D.2.34.13 – COMMENT: One commenter stated that radiation risks from nuclear power are carefully studied and radiation exposure requirements are so stringent that nuclear power plants release less radioactive material than coal-fired plants. The commenter stated that radiation professionals make conservative assumptions when setting acceptable radiation dose limits and nuclear power plants are required to operate within those limits even in the event of an accident. Two commenters supported the statements contained in Section 4.17 of the GEIS that radiological impacts from public and occupational doses would be SMALL because the doses would continue to remain below the regulatory dose limits.

RESPONSE: The NRC acknowledges the comments supporting the current radiation dose limits and the determinations in the GEIS agree with these comments. No changes were made to the GEIS or Rule as a result of these comments.

(674-8) (694-3-7) (697-2-16)

D.2.34.14 – COMMENT: A commenter stated that the GEIS addresses public and occupational health in the affected environment only "when everything goes well, when any accident is one of those expected accidents. But not if something unexpected happens."

RESPONSE: The NRC disagrees with the comment. The impacts from postulated and severe accidents are addressed in the GEIS in Sections 4.18, 5.18, and 6.4.17. Further, the NRC received a number of comments related to the treatment of accidents in the GEIS (see Section D.2.35.1 of this appendix). No changes were made to the GEIS or Rule as a result of these comments.

(836-51) (930-3-3)

D.2.34.15 – COMMENT: A commenter described the human internal dosimetry and radiation health effects of carbon-14 intake. The commenter stated that carbon-14 in the atmosphere more than doubled as a result of atmospheric nuclear weapons testing, and that this is one likely explanation for the large increase in the cancer rate during that same timeframe. The commenter stated that the NRC does not state in the GEIS how much carbon-14 would be produced and released into the atmosphere by the air cooling of dry casks over decades or centuries or how this would affect future generations.

RESPONSE: The NRC disagrees with this comment. The GEIS did not consider carbon-14 releases from dry cask systems because no carbon-14 is produced from air cooling of dry casks. Air cooling of dry casks occurs through heat transfer from the metal surface of the sealed containment canister and thus there is no production or release of carbon-14 from within a dry storage cask system. No changes were made to the GEIS or Rule as a result of these comments.

(410-26) (919-7-1)

D.2.35 Comments Concerning Accidents and Natural Events

D.2.35.1 – COMMENT: Many commenters expressed concern that the NRC has understated the environmental impacts of man-made and natural phenomena hazards on both reactor operations and spent fuel in continued storage. Commenters disagree with the statistical formulation of risk (probability times consequences) and state that the qualitative low probability of a severe accident is either understated or unjustified. One commenter asserted that the NRC should have performed a detailed quantitative analysis of the consequences of an accident. Many commenters stated that the consequences of an accident would be so large that the NRC's statistical formulation of risk should not apply and that the NRC should not continue to allow the use of nuclear power. Specific hazards described by commenters include earthquakes, high winds (hurricanes and tornadoes), flooding (sea rise, tsunamis, storm surge, and seiches), ice storms, "super-storms," wave action, salt water exposure, meteors, solar flares, dam failure, aircraft crash, and aging infrastructure. Many commenters stated concerns about specific hazards at individual nuclear power plant sites. For example, one commenter provided aerial photos of flooding during construction of Davis-Besse, but added that elevating HLW to protect it against flood hazards may expose it to terrorist attack. Further, commenters assert that the NRC has failed to consider how these hazards will increase over time due to factors such as climate change, geological shifts, and solar activity. Many commenters referred to the March 2011 accident at the Fukushima Dai-ichi nuclear power plant in Japan as grounds for their concerns. Commenters stated that the NRC and the industry are far too comfortable with the potential extreme consequences of accidents, or are deliberately down-playing the risks, and cite the Fukushima Dai-ichi nuclear accident as the latest example of nuclear industry and regulators failing to accurately predict natural disasters. One commenter cited the combined experience with accidents at Chernobyl, Three Mile Island, and Fukushima as reason to doubt the technical feasibility of accident prevention. One commenter, citing IAEA Safety Standards, asserted that the GEIS should have considered worst-case scenarios.

RESPONSE: The NRC disagrees with these comments. The NRC's consideration of the environmental impacts of accidents for at-reactor continued storage of spent fuel is provided in Section 4.18 of the GEIS. The GEIS, in the introduction of Section 4.18, states that consequences of severe accidents, should one occur, could be significant and destabilizing. However, the NRC makes impact determinations for these accidents based on risk, which takes into consideration both the low probability of these events and the potential consequences. Section D.2.35.27 of this appendix describes the NRC's use of risk in evaluation of the environmental impact of postulated accidents.

In the evaluation of the severe accident environmental risk, the NRC practice is to evaluate severe accidents that can reasonably be expected to occur and report probability-weighted consequences. Further, NEPA does not require consideration of worst-case scenarios.

The NRC's evaluation of potential accidents in Section 4.18 of the GEIS considers the effects of man-made hazards and natural phenomena such as seismic events, flooding from various causes, and high winds. Section 4.18.2.1 describes the NRC's assessment of spent fuel pool severe accidents due to many different causes, including loss of cooling, drainage of the pool, and structural failure of the pool due to loss of offsite power, seismic events, heavy load drops, missiles, aircraft crashes, flooding and tornadoes. The NRC believes that it is reasonable to use a representative analysis and that the spent fuel pool fire analysis is sufficiently conservative to bound the impacts of spent fuel pool severe accidents, regardless of the initiating event or scenario. In addition, Appendix F has been updated to include information from the more recent analysis of a seismically initiated spent fuel pool accident in SECY-13-0112 *Consequence Study of a Beyond-Design-Basis Earthquake Affecting the Spent Fuel Pool for a U.S. Mark I Boiling Water Reactor* (NRC 2013l), and the COMSECY–13–0030 regulatory analysis on expedited transfer of spent fuel (NRC 2013n). Both SECY-13-0112 and the regulatory analysis in COMSECY–13–0030 generally support the findings in NUREG–1738 (NRC 2001b) and NUREG–1353 (NRC 1989a) as used in the GEIS. The potential effects of climate change on the frequency and intensity of natural phenomena hazards such as flooding and hurricanes are also discussed in Section 4.18 of the GEIS, as relating to the initiating events for accidents in spent fuel pools or spent fuel storage systems.

With regard to the comment that aging infrastructure would expose the stored spent fuel rods at a facility, Section 1.8.3 of the GEIS assumes proper maintenance and management of the aging spent fuel storage facilities in compliance with NRC requirements for aging management. Insofar as the comment may be referring to the aging infrastructure offsite, such as the power grid, the accident assessment in Section 4.18 includes consideration of loss of offsite power, as well as loss of all power.

A few comments describe concerns with the corrosive effects of salt water exposure on the systems used to maintain pool cooling and integrity, either through atmospheric exposure at coastal sites, or through inundation. Appendix B of the GEIS describes the experience with storing spent fuel, including degradation processes that could impact the safety of continued storage. Section D.2.38.8 provides a more detailed discussion of how the GEIS addressed such degradation processes.

The NRC responses to comments on solar flares and meteorites are provided in Sections D.2.35.25 and D.2.35.30. No changes were made to the Rule as a result of these comments.

(24-2) (26-3) (30-15-10) (30-15-7) (35-3) (129-2) (131-2) (163-21-3) (210-3) (214-2) (240-2) (245-22-3) (246-17-2) (249-2) (250-46-1) (250-69-2) (250-39-3) (277-6) (284-6) (284-8) (288-1) (298-2) (303-14) (325-28-2) (325-34-2) (325-24-3) (325-19-5) (327-35-2) (327-42-3) (341-2-8) (348-6) (352-8) (358-4) (373-6) (377-4-6) (377-4-9) (425-1) (433-3) (436-3) (447-1-23) (447-1-4) (454-7) (464-2) (473-10-10) (473-17-4) (473-10-9) (485-1) (495-1) (498-13) (512-5) (515-4) (548-2) (607-3) (618-3) (622-4-10) (629-2) (633-4) (634-7) (641-1) (659-2) (660-4) (664-2) (668-

3) (686-3) (690-2) (693-4-4) (701-1) (711-40) (711-7) (718-1-10) (718-2-4) (757-10) (764-4) (764-6) (774-4) (788-3) (801-3) (823-28) (836-19) (836-47) (836-71) (855-2) (860-4) (882-2) (898-1-2) (905-2) (908-3) (920-37) (930-1-12) (930-2-21) (935-6) (945-4) (951-3) (1000-1)

D.2.35.2 – COMMENT: Several commenters stated that accident impacts at spent fuel storage facilities cannot be considered generically. In support of this view, commenters cited to the effects of global climate change, severe storms, earthquakes, malicious attack, and multiple equipment failures at multiple reactors. The commenters further stated that the GEIS fails to consider the indirect cumulative impact of Murphy's Law and how it played out at Fukushima, in terms of the compounding effects of a loss of onsite and offsite power, failure to open hardened vents, and human error.

RESPONSE: The NRC disagrees with the comments. In its remand of the 2010 Waste Confidence Rule, the Court of Appeals continued the long history of Federal courts approving a generic approach to the analysis of the environmental impacts of nuclear power reactor operation. The Court endorsed the NRC's generic approach, stating that there is "no reason that a comprehensive general analysis would be insufficient to examine onsite risks that are essentially common to all plants…, given the Commission's use of conservative bounding assumptions and the opportunity for concerned parties to raise site-specific differences at the time of a specific site's licensing" (*New York v. NRC*). The NRC believes that a generic approach is appropriate for the assessment of accidents because the GEIS makes impact determinations that apply to any spent fuel storage site and provides a conservative bounding analysis for continued storage accidents. For example, Appendix F of the GEIS, which provides the NRC's generic analysis for spent fuel pool fires, uses a reasonable existing generic analysis (NRC 2001b) to provide a basis for its quantitative estimates of the impacts, with additional discussion to describe the applicability of the analysis. Additionally, to account for site-related variability, the assumptions used in the GEIS to describe offsite environmental consequences to public health (i.e., public dose) include an assumption of late evacuation of the communities around the facility with 95 percent evacuation rates, instead of the 99.5 percent value normally used as a best estimate. The assumptions used in the analysis are sufficiently conservative to bound the impacts such that variances that may occur from site to site are unlikely to result in environmental impact determinations that are greater than those presented in the GEIS. Further, the GEIS considers a range of initiating events raised by the comments, including accidents due to earthquakes and other natural phenomena (Section 4.18) and terrorist attacks (Section 4.19). In developing the GEIS, the NRC considered, where appropriate, the lessons learned from the Fukushima accident (see Section 2.1.2.1). No changes were made to the GEIS or Rule as a result of these comments.

(89-14) (163-1-3) (195-1) (206-1) (681-10)

D.2.35.3 – COMMENT: Several commenters stated that the NRC should have conducted a SAMA analysis for continued storage at spent fuel pools and dry storage systems. Some commenters asserted that the SAMA analyses should include multi-unit sites, cost-benefit analyses of mitigation, and societal risk and "societal dose acceptance criteria." Commenters also objected to licensees' use of input values for the MACCS2 code based on values in "Sample Problem A" in the MACCS2 code manual for site-specific SAMA analyses.

RESPONSE: The NRC disagrees with the comments. As noted in some comments, the NRC does not currently require SAMA analyses for spent fuel storage facilities, while NRC regulations do require SAMA analyses for power reactors, for example under 10 CFR 51.53(c)(3)(ii)(L). NRC regulations provide a procedure for interested parties to request a change to NRC regulations under 10 CFR 2.802. And any person may request a proceeding to address a specific license through the procedures in 10 CFR 2.206.

As described in a 2008 Denial of Petition for Rulemaking (73 FR 46204), the NRC considers the likelihood of a spent fuel pool fire to be lower than that estimated in Generic Issue 82 (NRC 1989a) and NUREG–1738 (NRC 2001b), which are the basis for consequence and probability values reported in the GEIS. Thus, the very low probability of a spent fuel pool fire means that the risk is less than that of a reactor accident. Therefore, a SAMA analysis would not be expected to have a significant impact on total risk for a site.

In November 2013, the NRC completed a regulatory analysis that supports the earlier findings of the 2008 Denial of Petition for Rulemaking (NRC 2013n). The regulatory analysis was completed in response to questions about safe storage of spent fuel in spent fuel pools following the March 2011 accident at the Fukushima Dai-ichi nuclear power plant in Japan. In the regulatory analysis, the NRC determined that no additional study is warranted to assess possible regulatory action to require expedited transfer of spent fuel from nuclear power plants' spent fuel pools to dry cask storage. The NRC also considered other improvements to spent fuel pool storage in addition to assessing whether expedited transfer is warranted. For example, the NRC considered 1 x 8 high-density loading patterns, in which spent fuel recently unloaded from a reactor that still has relatively high decay heat is surrounded in the spent fuel pool by cooler spent fuel assemblies in each of the adjacent eight positions in a spent fuel pool rack. The NRC found that these alternatives would likely involve lower costs than expedited transfer, but that they would only provide limited safety benefit and the costs would not be warranted. With regard to how the GEIS considered societal risk metrics, the GEIS provides population risk values as a measure of societal risk. See Section D.2.35.5 of this appendix for additional information on consideration of societal risk. With regard to comments that NRC should consider the potential for accidents to involve more than one unit at multi-unit sites, SECY-13-0112 (NRC 2013l) provides an explanation of both ongoing NRC research in this area and how multi-unit events were considered in that study.

With regard to comments that object to licensees using "Sample Problem A" values as input values for the MACCS2 code as part of site-specific SAMA analyses, these comments are beyond the scope of the GEIS and Rule. Site-specific SAMA analyses, and individual input values for the MACCS2 code used to calculate accident consequences in support of SAMA analyses, are considered in site-specific licensing proceedings for reactors.

However, as stated in Sections D.2.35.16 and D.2.35.26 of this appendix, MACCS2 was also used in past studies by NRC to calculate accident consequences from a spent fuel pool fire. Since these studies were generic in nature, and not intended for application to specific sites, the NRC used input values that were consistent with what had been used in a 1990 study on reactor accident consequences, NUREG–1150, *Severe Accident Risks: An Assessment for Five U.S. Nuclear Power Plants* (NRC 1990). NUREG–1150 was subject to extensive peer review, which included review of the parameter values in the MELCOR Accident Consequence Code System (MACCS) model, which were also used in sample problem in the MACCS code manual known as "Sample Problem A." The results of the peer review are summarized in NUREG/CR–4551, *Evaluation of Severe Accident Risks: Methodology for the Containment, Source Term, Consequence, and Risk Integration Analyses* (Gorham et al. 1993). As a result of this peer review, many of the input values were found reasonable and are standard for all severe accident analyses. Therefore, NRC finds that the results of analysis with the MACCS2 code using Sample Problem A input values derived from the NUREG–1150 (NRC 1990) peer review represent the NRC's best-estimate consequence values for inclusion in Appendix F, Table F-1.

For a discussion of how the GEIS's accident analysis can apply generically see Section D.2.35.2 of this appendix. For an explanation of the alternatives considered in the GEIS see Section D.2.9.1 of this appendix. For an explanation of the GEIS's conservative bounding assumptions see Sections D.2.16.6 and D.2.16.30 of this appendix.

A summary of the results of the November 2013 regulatory analysis have been added to Appendix F of the GEIS. No changes were made to the Rule as a result of these comments.

(473-10-11) (473-10-12) (473-10-13) (473-10-14) (473-10-15) (681-11) (718-3-10) (718-5-10) (718-1-11) (718-5-11) (718-3-14) (718-3-16) (718-3-2) (718-1-3) (718-3-3) (718-3-4) (718-5-4) (916-1-18) (916-1-19) (916-1-20)

D.2.35.4 – COMMENT: A commenter cited an Institute for Policy Studies report (Alvarez 2011) on events related to continued storage of spent fuel in spent fuel pools. The commenter cited a section of the Institute for Policy Studies report that describes spent fuel pool loss of water events, violations of NRC nuclear criticality safety requirements, effects of high-burnup fuel on heat loading in the pools, higher amounts of radioactive material in high-burnup spent fuel, and thinning and embrittlement of spent fuel cladding. The commenter stated that these points

support the need for a comprehensive NEPA review of a failure of temporary storage of spent fuel at all operating reactors.

RESPONSE: The NRC agrees with the comment that these issues related to continued storage need to be addressed. The GEIS addresses the general issues raised by the comment and describes the environmental impacts of continued storage. For example, the NRC addresses spent fuel pool loss of water and criticality events in Section 4.19 and Appendix F. The GEIS also describes the use of high-burnup fuel, including the cladding embrittlement issue, in Chapter 2 and Appendix B. No changes were made to the GEIS or Rule as a result of this comment.

(89-6)

D.2.35.5 – COMMENT: A commenter stated that the NRC should "[d]evelop a quantitative health risk acceptance criteria compatible with the Commission's Policy Statement regarding societal risk (in addition to the criteria for individual risk)."

RESPONSE: The NRC disagrees with this comment. The quantitative health objectives are given in the Commission's Safety Goal Policy Statement which was published in the *Federal Register* on August 31, 1986 (51 FR 30028). Comparison of the individual latent (cancer) fatality risk within 16 km (10 mi) to the qualitative health objectives for latent fatality is a measure related to the evaluation of societal risk. Appendix F of the GEIS discusses the NRC's evaluation of spent fuel pool fires. Although the NRC does not use a different societal risk criterion, as requested in the comment, population risk is assessed in addition to individual risk. Estimates of collective dose to the public and collective early fatalities within 80 km (50 mi), and collective latent fatalities within 800 km (500 mi) are listed in Table F-1. Table F-2 includes population risk in the comparison of frequency-weighted (probability-weighted) consequences from spent fuel pool fires to those from reactor accidents for a specific site. No changes were made to the GEIS or Rule as a result of this comment.

(718-5-3)

D.2.35.6 – COMMENT: One commenter stated that the GEIS includes a "few short sections briefly discussing potential severe accidents at spent fuel pools including spent fuel leaks, spent fuel pool fires, and sabotage or terrorist acts," but that the only type of accident that is analyzed in detail is a spent fuel pool fire.

RESPONSE: The NRC acknowledges this comment, with respect to a detailed analysis of spent fuel pool fires being provided in Appendix F of the GEIS. As the comment notes, other types of spent fuel pool severe accidents were discussed in the GEIS. Section 4.18.2.1 describes the NRC's assessment of spent fuel pool severe accidents due to many different causes, and based on the studies referenced in the GEIS determined that the spent fuel pool

fire is a representative scenario for estimating the risk from spent fuel pool severe accidents. This is because the consequences of a spent fuel pool fire are likely to be more significant than the consequences of other accident scenarios. The NRC believes that it is reasonable to use a representative analysis and that the spent fuel pool fire analysis is sufficiently conservative to bound the impacts of spent fuel pool severe accidents, regardless of the initiating event or scenario. No changes were made to the GEIS or Rule as a result of this comment.

(473-13-7)

D.2.35.7 – COMMENT: A commenter stated that an NRC technical expert working on NUREG–1738 (NRC 2001b) said that a cask drop in a BWR Mark I spent fuel pool would not be significantly slowed by passage through water and that a drop from as little as 4 ft from the bottom would result in complete cask penetration. The commenter stated that such a load drop would create an 11 foot diameter hole in the bottom of the spent fuel pool, crush several tons of spent fuel, and result in the cask dropping to ground level. Another commenter referred to a narrowly averted cask drop in 1995 at Prairie Island, and stated that cask movement is more dangerous in some General Electric boiling water reactors because spent fuel pools are several stories above grade in reactor buildings.

RESPONSE: The NRC acknowledges the concerns raised in the comments about potential damage from a cask drop; the potential for a cask drop to cause an accident in a spent fuel pool was considered in Section 4.18.1 of the GEIS, as a postulated design basis accident and Section 4.18.2 as one initiating cause for a severe accident in the spent fuel pool. As discussed in Appendix F to the GEIS, the assessment of spent fuel pool fires included consideration of several ways that a spent fuel pool accident could develop into a spent fuel pool fire. Dropping of a heavy load (such as a cask) into the spent fuel pool was among the accident initiators considered in the GEIS. No changes were made to the GEIS or Rule as a result of these comments.

(723-9) (819-13)

D.2.35.8 – COMMENT: Several commenters stated that the GEIS did not fully consider accidents in dry cask storage systems. One commenter stated that the GEIS should have considered dry cask fires. A few commenters stated that the GEIS should have evaluated the environmental impacts of accidents involving dry cask storage systems assuming safety systems do not work properly or fail. Commenters stated that many dry cask storage systems in use are not currently approved for transporting spent fuel, and these casks could not be moved to avoid flood hazards. A commenter stated that the GEIS did not describe accident impacts that postulated accidents would have on the affected environment (e.g., aquatic resources, special status species, terrestrial resources, etc.).

Another commenter stated that the NRC did not consider a 2012 flooding event at the Fort Calhoun nuclear power plant, in which the Missouri River nearly reached the grade level of the onsite ISFSI. The commenter stated that the NRC has no means to assure that this would be the case in future catastrophic flooding; or that Cooper Nuclear Station or Oconee Nuclear Station dry casks would be above flood level after a catastrophic upstream dam failure. The commenter stated that should ISFSI flooding occur, the lower cooling vents of the casks could potentially become submerged or clogged with debris that licensee personnel would not be able to intervene to clear, resulting in a possible cask rupture.

Another commenter stated that the GEIS should have considered criticality accidents in dry casks storage systems and cited NUREG/CR–6835, *Effects of Fuel Failure on Criticality Safety and Radiation Dose for Spent Fuel Casks* (Elam et al. 2003), in support of the comment. Other commenters stated that dry cask storage systems offer significant robust protection from natural phenomena.

Some commenters stated that the accident in March 2011 at the Fukushima Dai-ichi nuclear power plant demonstrates that dry cask storage systems are more robust than spent fuel pools. Commenters described effects of the August 23, 2011 Mineral, Virginia earthquake on spent fuel storage facilities at the North Anna Nuclear Generating Station and stated that seismographs have been removed from at least one plant. A few commenters noted that the heavy cement dry storage casks moved 1 to 4 in. One commenter went on to point out that, there are earthquake faults near specific plants and that there is no proof that, after an earthquake, the waste will be able to be removed safely because no fuel has been removed from dry cask storage after a long period of time. Some commenters stated that the accident at Fukushima Dai-ichi and the Mineral, Virginia earthquake demonstrate that dry cask storage systems are robust, one commenter stated dry cask storage systems are more robust than spent fuel pools.

RESPONSE: The NRC agrees in part and disagrees in part with the comments. The NRC agrees that dry cask storage systems offer significant robust protection from natural phenomena, as evidenced by the continued safety of storage facilities after earthquakes struck spent fuel storage facilities at the Fukushima Dai-ichi and North Anna nuclear power plants. However, the NRC disagrees that the analysis in the GEIS is deficient with respect to the analysis of accidents involving dry cask storage systems and disagrees that the additional information and documents cited by the commenters affects the analysis or conclusions in the GEIS.

The NRC does not agree with the comments' statements about the risk of spent fuel fires in dry cask storage systems. Dry cask storage systems are passive and robust engineered structures designed to withstand natural forces, such as earthquakes and wind-borne missiles. There are no active safety systems that could fail and thereby increase the likelihood of a release of radioactive material. Even in the highly unlikely event of an accidental breach of a cask, or cask

and canister in a dual-purpose system, the spent fuel will have sufficiently cooled before being placed in dry casks that a runaway zirconium oxidation reaction (fire) is no longer possible. Therefore, safety system failure and dry cask fire are not reasonably foreseeable.

The NRC also does not agree that measures could not be taken to address changing flood risks. As stated in the GEIS, corrective actions that could be taken to address increasing flood hazards include the use of flood barriers and moving casks or canisters to an adjacent new pad constructed at a higher elevation. Movements of dry casks do not require transportation of the spent fuel across U.S. roads and highways. Rather, the spent fuel could be moved onsite using cask transporters in the same manner in which the spent fuel canisters or casks were moved to the ISFSI from the reactor auxiliary building. If flood risks increased to a level that made flood hazards likely enough to pose a safety risk, the NRC or licensee would take necessary steps to address the risk. Comments on the risk of upstream dam failures are addressed in Section D.2.35.22 of this appendix.

The NRC also does not agree that the GEIS should separately address the radiation impacts that postulated dry cask storage accidents would have on non-human species. In general, the NRC supports the position stated in International Commission on Radiological Protection Publication 60 that protecting individual humans to current radiation protection standards affords adequate protection to non-human species (ICRP 1991). This is especially true for the relatively small releases associated with postulated accidents involving dry cask storage systems.

The NRC also does not agree that NUREG/CR–6835 (Elam et al. 2003), *Effects of Fuel Failure on Criticality Safety and Radiation Dose for Spent Fuel Casks*, provides a basis for estimating environmental impacts from continued storage of spent fuel. As stated in Section 5 of NUREG/CR–6835, the studies presented in the report may be characterized as scoping in nature because they are based on limited knowledge of failed fuel conditions and configurations and include a number of assumptions in which scenarios go beyond credible conditions (Elam et al. 2003). The study authors recommended future work to more completely and accurately address the concerns related to the consequences of potential fuel failure. The authors expected that future work would further evaluate the most plausible scenarios by incrementally moving toward credible conditions. Along those lines, in 2007, EPRI completed a report, *Fuel Relocation Effects for Transportation Packages* (EPRI 2007b), in which it attempted to provide credible estimates of the probability and maximum reactivity changes resulting from theoretical, “worst-case” fuel reconfiguration scenarios. EPRI found that the maximum reasonable reactivity increase was within safety margins allowed by NRC for scenarios involving physical changes to fuel assembly rod arrays and was more likely to result in a substantial reactivity decrease for scenarios involving fuel pellet arrays. No changes were made to the GEIS or Rule as a result of these comments.

(30-15-1) (30-4-5) (112-3-6) (137-2) (329-30-1) (377-5-1) (404-4) (552-1-18) (552-2-19) (622-4-1) (622-4-2) (694-3-9) (697-2-18) (716-15) (716-16) (718-2-12) (826-20) (898-3-5) (898-3-6)

D.2.35.9 – COMMENT: One commenter stated that the GEIS should have comprehensively analyzed all aspects of accidents involving dry cask storage and inter-cask fuel transfers based on sound scientific information. The commenter stated that when the information is incomplete or has significant uncertainties, these should have been stated. The commenter stated that if there are methodological studies that provide a guide to how calculations should be done, the guidance should be used to develop estimates. The commenter further noted that in some cases, the data gaps are so large, that a realistic calculation of uncertainties can be operationally meaningless in the sense of its usefulness for choosing among alternative courses of action. The commenter stated that the NRC should not have summarized the results of NUREG–1864, *A Pilot Probabilistic Risk Assessment of a Dry Cask Storage System at a Nuclear Power Plant* (NRC 2007e), in the GEIS because the study states: "the methodology developed in this study can be used as a guide for performing other similar PRAs [probabilistic risk assessments]. Moreover, the results of this study can be used in conjunction with the methodology selected to determine the need for other PRAs, improvements in data gathering and analysis, and additional engineering design analysis. It should be noted that the focus of this pilot study was solely on the methodology and its limited (i.e., case-specific) application. Thus, no inferences or conclusions should be drawn with regard to the study's regulatory implications." The commenter also stated that NUREG–1864 (NRC 2007e) listed a number of uncertainties, but did not consider them in its analysis, including the dependence of release fractions on changes that occur in the properties of the fuel and the cladding while in-reactor.

Another commenter stated that dry cask storage systems offer significant robust protection from natural phenomena and that the NRC's citation to NUREG–1864 (NRC 2007e) was appropriate. The commenter suggested that the GEIS could be further strengthened by citing an independent PRA study conducted by EPRI (EPRI 2004b). This commenter stated that the Fukushima Dai-ichi and Mineral, Virginia, earthquakes demonstrate that the low risks calculated by these PRAs are correct.

RESPONSE: The NRC agrees in part and disagrees in part with the comments. The NRC has revised Section 4.18.2.2 of the GEIS to cite EPRI's independent PRA results from a 2004 study for bolted casks containing PWR fuel (EPRI 2004b), in addition to the results from NUREG–1864 (NRC 2007e), which examined BWR spent fuel storage in a canister-based dry cask storage system. The NRC disagrees with the inference by the commenter that the GEIS was not based on sound scientific information and did not appropriately consider uncertainties. The environmental impacts of accidents described in the GEIS are based on NRC's experience with licensing dry cask storage systems and the industry's experience in operating them. The environmental impacts of accidents are conservative and bounding, and appropriately deal with uncertainty, because variances that may occur between BWR and PWR fuel and from site to site are unlikely to result in environmental impact determinations larger than those presented in the GEIS. For example, among the conservative and bounding assumptions used in the analysis in NUREG–1864 were that the spent fuel is high-burnup (50 GWd/MTU) BWR fuel

dropped up to 30 m (100 ft), causing up to 0.12 percent of the total mass of the spent fuel to escape the cask, which is equivalent to about 15 kg (34 lb) of crushed spent fuel, which is all assumed to be particles with a diameter considered breathable by humans, and no deposition of particles inside the reactor building. Even with these conservative assumptions, the individual risk of latent cancer fatality is extremely low (i.e., on the order of 1.8×10^{-12} for the first year of service, which is nearly one million times smaller than NRC's quantitative health objectives stated in the Safety Goal Policy Statement (51 FR 30028)). Further, since the environmental impacts of accidents for dry cask storage are essentially the same for all alternatives considered in the GEIS, the uncertainties in these analyses do not render these analyses useless, as suggested by the commenter. The NRC also disagrees that the risks of accidents for dry cask storage contained in NUREG–1864 (NRC 2007e) do not provide useful insights into the environmental impacts of severe accidents involving dry cask storage systems. As stated in Section 1.6.2.2, the GEIS does not impose new regulatory requirements. Therefore, the GEIS draws no inferences or conclusions about the regulatory implications of NUREG–1864 (NRC 2007e). The GEIS merely reflects the environmental impacts based on the results of that study. As a result of these comments, the NRC has revised Section 4.18.2.2 of the GEIS to include a summary of EPRI's independent PRA results from a 2004 study for bolted casks containing PWR fuel. No changes were made to the Rule as a result of these comments.

(827-4-1) (898-1-13) (898-1-14) (898-1-15) (942-4)

D.2.35.10 – COMMENT: One commenter stated that the NRC did not address the environmental impacts of an earthquake occurring while a dry cask is being loaded and the dry cask is still open, and that the NRC provided no rationale for why the two accidents considered are in fact representative.

RESPONSE: The NRC disagrees with the comment. During routine handling of spent fuel, there are no times when a cask or canister is lifted while it is still open. In the DTS, both the source cask and receiving cask would remain on the floor throughout spent fuel transfer operations. Therefore, there are no foreseeable accidents in which an open cask could be dropped during an earthquake. Further, while a single fuel assembly drop during spent fuel handling in the DTS was considered by DOE (1996), the potential offsite radiological consequences from a single fuel assembly drop would be less than the radiological consequences of a loss of confinement barrier event that was summarized in Section 4.18.1.2 of the GEIS. The accidents at the DTS with larger consequences are considered representative of accidents because they represent a limit on the severity of environmental impacts that could occur. For more information on the DTS fuel transfer process, see Section 2.1.4 of the GEIS. No changes were made to the GEIS or Rule as a result of this comment.

(669-14)

D.2.35.11 – COMMENT: Several commenters stated that the GEIS should have evaluated other potential accidents in a DTS beyond the two accidents described in the GEIS. The commenters expressed general concerns about the potential degraded physical state of fuel in the future and the potential for accidents that cannot be anticipated at this time. One commenter noted that the DTS is not currently licensed, and inspections and repackaging involving multiple assembly transfers are not performed now. The additional DTS accidents that some commenters suggested should be considered include a partial meltdown inside the cask, gross structural failure of shielding and confinement barriers at the DTS, and spent fuel assembly and cask drops. Commenters also questioned why the postulated DTS does not have a containment structure.

RESPONSE: The NRC agrees in part and disagrees in part with the comments. The NRC agrees that the GEIS did not describe how licensees would handle damaged fuel during future dry transfer operations. As stated in Section D.2.17.4 of this appendix, a discussion of handling operations for damaged fuel has been added to Chapter 2 of the GEIS. However, the NRC disagrees that the consideration in the GEIS of the environmental impacts of postulated accidents at a DTS is insufficient. The accidents that the NRC summarized in the GEIS were those analyzed by the DOE in its Topical Safety Analysis Report (DOE 1996) that could result in releases to the environment. A partial meltdown is not possible in the long-term or indefinite timeframes because spent fuel will have cooled well below temperatures above which runaway zirconium oxidation is possible. Given the passive nature of shielding at a DTS, which would be designed to withstand an earthquake and other natural forces, the NRC does not agree that gross structural failure of shielding is reasonably foreseeable. However, one of the postulated accidents considered in Section 4.18.1.2 of the GEIS is a loss of material confinement caused by failure of the DTS ventilation system, which was estimated to result in a postulated dose of 7.2 mSv (721 mrem) to an individual standing 100 meters away. No changes were made to the GEIS or Rule as a result of these comments.

(836-55) (836-56) (915-7) (930-3-7) (930-3-8)

D.2.35.12 – COMMENT: Several commenters stated that the GEIS did not consider human error as a cause of potential accidents. One commenter stated that there has been relatively less work on human factors risks associated with the dry cask storage of spent fuel, as compared to human factors risks associated with nuclear reactor operations. The commenter stated that if the quality of human capital declines, the risks associated with continually transferring and packaging the spent fuel will increase.

RESPONSE: The NRC disagrees with the comments. Section 4.18 of the GEIS discusses the environmental impacts of postulated accidents involving the continued storage of spent fuel, including both human-induced events and natural phenomena events (such as earthquakes, tornadoes and hurricanes). An example of a human-induced event would be dropping a cask during handling as a result of poor rigging. The initiating events that may cause accidents are

not described in detail in the GEIS, but human error has been considered as a factor in the initiation of postulated accidents summarized in the GEIS. However, the NRC has no basis to assume a decrease in future workforce quality, and higher human error rates, in calculating accident risk. No changes were made to the GEIS or Rule as a result of these comments.

(163-16-2) (553-13) (805-13) (867-3-7)

D.2.35.13 – COMMENT: A commenter stated that the GEIS should explain how "a larger fraction of transuranics impact[s] hazard (calculated for cancer and cancer death) from a major reactor, fuel pool, transport or storage accident."

RESPONSE: The NRC disagrees with the comment. The comment is referring to the amount of transuranic elements in high-burnup light water reactor spent fuel, (i.e., spent fuel with a burnup greater than 45 GWD/MTU). Transuranic elements are radioactive elements that have an atomic number higher than uranium in the periodic table of elements (e.g., neptunium, plutonium, and americium). Section 2.1.1.3 of the GEIS describes the characteristics of the fuel considered in the analyses, including burnup.

In the analysis in NUREG–1738 (NRC 2001b), which is the basis for the NRC's assessment of the severe accident impact from spent fuel pool fires, radionuclides other than isotopes of cesium (radiocesium), including all transuranic radionuclides, contribute a small fraction to environmental impacts as compared to the impacts from radiocesium alone. This is illustrated in Table A4-17 of NUREG–1738, which compares the results of two analyses - one with radiocesium in the modeled release and another without radiocesium. The accident consequences (i.e., prompt fatalities, societal dose, and cancer fatalities) with no radiocesium in the release are a few percent of the accident consequences with radiocesium. Further, the ratio of transuranic radionuclides to radiocesium does not change appreciably as spent fuel burnup increases (NUREG/CR-6703, Ramsdell et al. 2001). Therefore, transuranic radionuclides in high-burnup fuel do not significantly contribute to the environmental impacts of accidents. No changes were made to the GEIS or Rule as a result of this comment.

(711-31)

D.2.35.14 – COMMENT: A commenter stated that the NRC should reformulate the consideration of accidents in the GEIS to include "cliff-edge" events – those for which a small incremental increase in severity can yield a disproportionate increase in consequences. The commenter cited as support for the comment several observations from a June 2012 report by the American Society for Mechanical Engineering Presidential Task Force on Response to Japan Nuclear Power Plant Events, titled *Forging a New Nuclear Safety Construct* (ASME 2012). Excerpts from the American Society of Mechanical Engineers report provided by the commenter included statements about the nature of the Fukushima Dai-ichi accident (i.e., unforeseen or large natural

phenomena events resulting in prolonged station blackout) and the role of individual and collective human actions and decisions in the sequence of a severe accident.

RESPONSE: The NRC disagrees with this comment. Section 4.18.2.1 of the GEIS describes the NRC's assessment of spent fuel pool severe accidents due to many different causes. Based on studies referenced in the GEIS, the NRC has determined that a spent fuel pool fire is a representative scenario for estimating the risk from spent fuel pool severe accidents because the spent fuel pool fire analysis is sufficiently conservative to bound the impacts of spent fuel pool severe accidents, regardless of the initiating event or scenario. For this reason, consideration of other "cliff-edge" events would not identify any additional scenarios with consequences greater than those analyzed in the GEIS.

The NRC generally bases regulatory decision-making on bounding or conservative values in its analyses to account for uncertainties in accident progression or release. As an example of the bounding nature of the analyses referenced in the GEIS, the evaluation of spent fuel pool accidents in NUREG–1738 (NRC 2001b) assumed that a spent fuel pool fire occurs for any accident scenario as soon as the depth of the water in the pool became as low as 0.9 m (3 ft) above the spent fuel, regardless of how long after that time or whether a spent fuel fire would be initiated. The modeling of the accident scenarios using this assumption reduces the potential time for radioactive and thermal decay to maximize both the radioactive material in the fuel and the heat load on the fuel to maximize the calculated release. For a discussion of the assumptions in studies used in the GEIS, see Section D.2.39.23 of this appendix. As discussed in Section D.2.39.23, the NRC chose to develop its generic analysis of the environmental impacts of spent fuel pool fires by selecting a reasonable existing analysis to provide a basis for its quantitative estimates of the impacts, and then discuss any significant uncertainties and whether or how these uncertainties would affect the quantitative estimates provided in that analysis. No changes were made to the GEIS or Rule as a result of this comment.

(341-2-6)

D.2.35.15 – COMMENT: A commenter stated that the GEIS should have provided an opportunity to address the NRC's patchwork regulatory approach identified by the NRC's Near-Term Task Force following the March 2011 accident at the Fukushima Dai-ichi nuclear power plant and to address severe accidents associated with spent fuel pools. The commenter complained that the NRC has deferred this issue to the future and that although the NRC has requested additional information from licensees, it has not yet been received.

RESPONSE: The NRC disagrees with the comment. Section 4.18.2 of the GEIS addresses, as part of the "defense-in-depth" philosophy, severe accidents in spent fuel pool and dry cask storage systems. The discussion of a patchwork regulatory approach in the Near-Term Task Force report (NRC 2011f) is specific to currently operating reactors. The Task Force stated that the Commission has established the necessary defense–in-depth severe accident requirements for new reactor licensing. The Task Force does not address the regulatory framework for

licensing ISFSIs under 10 CFR Part 72. As the Task Force states, updating the regulatory framework would be no small feat, but continued operation and licensing of reactors do not pose an imminent risk to public health and safety. No changes were made to the GEIS or Rule as a result of this comment.

(693-2-16)

D.2.35.16 – COMMENT: Several commenters expressed concerns with the estimates of the environmental impact of decontamination and waste disposal after an accident during continued storage. One commenter stated that the NRC's technical bases for estimating decontamination costs following a spent fuel pool fire are unsupported. The commenter stated that the decontamination costs in Sample Problem A in the MACCS2 code manual, which are based on NRC's technical report NUREG–1150, *Severe Accident Risks: An Assessment for Five U.S. Nuclear Power Plants* (NRC 1990), are traceable to a draft, unpublished report. The commenter stated that this flaw renders reliance on Sample Problem A to be unreasonable, thus requiring site-specific values for decontamination costs. Another commenter stated that the GEIS should have addressed the costs and expertise needed to complete decontamination of property after a radiological accident at a spent fuel storage facility. Other commenters stated that Section 3.14 of the draft GEIS does not account for wastes generated as a result of accidents or other off-normal conditions.

RESPONSE: The NRC disagrees with the comments. Although a draft report cited as a basis for decontamination costs values used in the MACCS computer model was not published and is not publicly available, the unavailability of the draft report does not render the generic assessment of spent fuel pool fire consequences incorrect. As explained further below, the NRC relied on the available information and analysis in completing the GEIS assessment of spent fuel accident consequences; NEPA does not require agencies to resolve all uncertainties, including, in this case, uncertainty associated with decontamination values used in the studies referenced in the GEIS.

The NRC's estimates of onsite and offsite property damage costs of a severe spent fuel pool fire, which includes the costs of decontaminating property, are provided in Table F-1 of the GEIS. As noted in the footnotes of Table F-1, the references for these property damage values are NUREG–1353, *Regulatory Analysis for the Resolution of Generic Issue 82, 'Beyond Design Basis Accidents in Spent Fuel Pools'* (NRC 1989a) and NUREG/BR-0184, *Regulatory Analysis Technical Evaluation Handbook* (NRC 1997a). Each of these reports, in turn, cites NUREG/CR–5281, *Value/Impact Analyses of Accident Preventive and Mitigative Options for Spent Fuel Pools* (Jo et al. 1989) as the source for property damage values. The authors of NUREG/CR–5281 used the MACCS version 1.4 to estimate offsite property damage. As described by the commenter, the MACCS computer code was also used in NUREG–1150, *Severe Accident Risks: An Assessment for Five U.S. Nuclear Power Plants* (NRC 1990).

NUREG–1150 was subject to extensive peer review, which included review of the parameter values in the MACCS model used for estimating decontamination costs, including the parameter values included as part of Sample Problem A in the MACCS code manual (NRC 1990). The results of the peer review are summarized in NUREG/CR–4551, *Evaluation of Severe Accident Risks: Methodology for the Containment, Source Term, Consequence, and Risk Integration Analyses* (Gorham et al. 1993). As a result of this peer review, the decontamination parameter values in Sample Problem A are standard for all severe accident mitigation analyses conducted for site-specific reactor licensing proceedings. Therefore, the NRC finds that the decontamination cost values derived from the NUREG–1150 peer review represent the NRC's best-estimate values for inclusion in Appendix F, Table F-1.

With regard to the comment's assertion that the GEIS should address the specific expertise needed for decontamination activities in the event of an accident, the NRC disagrees. The identification of specific expertise required for decontamination and decommissioning activities after a postulated accident is unrelated to impact assessment and is therefore beyond the scope of spent fuel pool fire analysis addressed in the GEIS.

With regard to the commenters' assertions that Section 3.14 of the GEIS should address the waste volumes generated as a result of severe accidents, the NRC disagrees. Chapter 3 describes the affected environment for the various resource areas that the NRC analyzes in Chapters 4 and 5 of the GEIS. This description presents the affected environment that the NRC expects to exist during normal operations of spent fuel storage facilities after the end of the reactor's licensed life for operation. GEIS Section 4.18.2.1 describes the risk of spent fuel pool severe accidents. But the waste and contamination that could result from a severe accident would require remediation that cannot be meaningfully assessed now and is too far removed from the discussion of severe accident risk in Section 4.18.2.1 and health and economic impacts discussed in Appendix F to provide useful information to the public and agency decisionmakers. In general, the amount of waste generated by cleanup activities following the early stages of an accident will depend on strategies that are developed at that time that take into account data collection, stakeholder involvement, and options analysis. Therefore, it is not possible to arrive at a meaningful estimate of radioactive waste volume that would be generated from an accident (EPA 2013). No changes were made to the GEIS or Rule as a result of these comments.

(718-4-17) (836-49) (867-3-11) (930-3-1)

D.2.35.17 – COMMENT: Many commenters stated that although the GEIS considered the accident risk per year at individual continued storage facilities, the GEIS does not consider the cumulative environmental impacts of accident risks at all continued storage facilities or all storage and operating facilities. As a result, these commenters assert, the NRC's impact determinations are inaccurate and should be MODERATE or LARGE, rather than SMALL. The commenters also stated that the NRC should consider cumulative risk over time, including all

three continued storage timeframes. One commenter suggested that the NRC should incorporate the effects of fuel aging into the cumulative impacts assessment. Further, some said the GEIS does not consider increases in accident consequences due to changes in site characteristics over time, such as increases in population density or the addition of new operating reactors to the same site. Some commenters stated that the GEIS should have considered the cumulative risk of different types of accidents.

RESPONSE: The NRC disagrees with these comments. The recommendation that the GEIS report environmental impacts of accident risks at all continued storage facilities or all storage and operating facilities goes beyond the scope of the GEIS. Because the GEIS will support individual licensing actions for power reactors that use a spent fuel pool for continued storage operations, the appropriate risk metric for an accident evaluation of continued storage in spent fuel pools at a proposed facility is for an individual facility and not a larger population of facilities, as recommended by the comment. Additionally, the cumulative accident analysis in Section 6.4.17 of the GEIS considered the impact conclusions from Section 4.18 of the GEIS and further evaluated the additional accident risks from other continued storage activities, including power plants that could be closely sited within 80 km (50 mi) of a proposed reactor. The cumulative accident analysis did not combine accident risks from other activities beyond the 80 km (50 mi) radius. Broadening the geographic scope of the analysis to a national scale as one comment suggested would extend the affected accident area well beyond the locale likely to be affected by even the most severe accident and would not therefore reasonably assess cumulative impacts.

The discussion of severe accident risk in Section 4.18 of the GEIS and Appendix F reasonably assumes that both the likelihood and consequences of severe accidents are constant over time because storage facilities and activities will remain constant for the period analyzed. The NRC believes this is reasonable given the decreasing fission product inventory of shorter-lived radionuclides due to radioactive decay and decreasing spent fuel pool decay-heat load, both of which reduce consequences of a severe accident. Further, only the short-term storage timeframe is assessed for spent fuel pool fires because spent fuel will not be stored in a spent fuel pool after that time. To address changing conditions at the site, Section 6.4.17 provides a discussion of potential cumulative accident impacts affected by the general trends and activities at or near spent fuel storage facilities discussed in Section 6.3.1 of the GEIS. These general trends and activities include such factors as changes in site characteristics due to climate change, overall United States population growth, and cumulative impact from accidents from nuclear power plants and spent fuel storage facilities within 80 km (50 mi). No changes were made to the GEIS or Rule as a result of these comments.

(30-17-8) (59-8) (289-2) (447-1-12) (473-2-1) (473-1-15) (473-12-2) (473-4-2) (473-1-5) (473-12-5) (496-2) (616-7) (625-4) (640-5) (709-7) (836-18) (856-7) (915-9) (916-3-2) (916-3-23) (930-1-11)

D.2.35.18 – COMMENT: One commenter stated that the NRC should assess the hazard that increasing amounts of marine debris poses to the continued operation of spent fuel pool cooling-water intakes and ISFSI cooling vents, and suggested that the NRC conduct site-specific assessments of the regional variation in these marine debris.

RESPONSE: The NRC disagrees with this comment. As stated in Table 4-1 of the GEIS, the amount of cooling water needed during continued storage of spent fuel in spent fuel pools is very small as compared to the normal withdrawal rates for an operating reactor. Given the small amounts of cooling water needed, marine debris is unlikely to block cooling-water intakes long enough to interfere with spent fuel pool cooling. Furthermore, during plant decommissioning, the safety-related function of cooling in spent fuel pools during the short-term continued storage can be met by means other than the normal service-water system. These alternative measures include adding makeup water from alternative sources directly to the pool to replace pool water lost by evaporation and using the atmosphere, rather than nearby surface waters, as the ultimate heat sink. For example, as stated in Section 2.2.1.2 of the GEIS, when plants begin decommissioning, the spent fuel pool is often cooled using a new spent fuel pool cooling system that discharges heat to the atmosphere instead of nearby surface waters. No changes were made to the GEIS or Rule as a result of this comment.

(622-4-6)

D.2.35.19 – COMMENT: A commenter described inherent deficiencies in relying on a probabilistic risk assessment for reactors. The deficiencies identified by the commenter include large uncertainties resulting from phenomenological factors related to estimating radioactive release, atmospheric characteristics, and indirect consequences, and insufficient treatment of common mode failures. The commenter also described three reasons an idealized system examined in a PRA can be an incomplete representation of reality: (1) gross errors in design, construction, or operation; (2) no accounting for malevolent acts; and (3) inability to account for deficiencies in institutional culture and practice. The commenter also asserted that PRAs typically yield estimates of probability that are substantially lower than is implied by direct experience and insurers' judgment.

RESPONSE: As discussed in the Sections D.2.39.5 and D.2.39.23, the NRC recognizes that there are uncertainties in the analysis of environmental impacts in the GEIS and that a variety of factors can affect the actual impacts at a given plant. The NRC also recognizes that there have been a number of analyses that have provided quantitative estimates of the potential impact of accidents at spent fuel pools; several of these analyses are discussed in Section 4.3 of the GEIS. Further, the GEIS has been updated to include a discussion of recently published analyses such as SECY-13-0112 (NRC 2013l). The NRC notes that determination of the impacts from a potential spent fuel pool accident involves consideration of both likelihood and consequence. The GEIS uses quantitative estimates of the consequences of severe accidents from NUREG–1738 (NRC 2001b) and NUREG–1353 (NRC 1989a), a discussion of the

heterogeneity and uncertainty in factors that can significantly affect quantitative estimates, and a reasoned evaluation of the extent to which these considerations would affect quantitative estimates of environmental impacts of spent fuel pool accidents to provide the impact determination for severe accidents. The NRC believes that this is a reasonable and adequate approach for evaluating the environmental impacts of severe accidents. The NRC agrees that factors such as population density, seismic risk, and spent fuel pool inventory are both important to the determination of environmental impacts and can vary across plants, and that results of PRAs are subject to uncertainties. Appendix F has been revised to include more discussion of these factors and their potential impacts on the quantitative estimates to ensure that these factors are fully disclosed and considered. No changes were made to the Rule as a result of these comments.

(916-1-10) (916-1-11) (916-1-12) (916-1-17) (916-3-19) (916-1-8) (916-1-9)

D.2.35.20 – COMMENT: One commenter stated that the GEIS failed to provide a detailed quantitative analysis of the impacts to public health and the environment that would occur in the event of an accidental release of radiation during spent fuel storage or transfer, and that these impacts could be substantial.

RESPONSE: The NRC disagrees with the comment. The GEIS describes the environmental impacts of accidents in Section 4.18 of the GEIS. Section 4.18 includes, for example, a description of the accident dose criteria that must be met for spent fuel pool handling accidents (6.25 rem total effective dose equivalent) and dry cask storage system accidents (e.g., a 5 rem limit on total effective dose equivalent), which bounds the offsite consequences for all facilities. The GEIS also describes postulated accident consequences for a reference DTS. A detailed explanation of the consequences of a spent fuel pool fire is also provided in Appendix F of the GEIS. No changes were made to the GEIS or Rule as a result of this comment.

(898-5-14)

D.2.35.21 – COMMENT: One commenter asserted that NRC should have considered a range of predicted outcomes when considering the environmental impacts of accidents, instead of a single predicted outcome.

RESPONSE: The NRC disagrees with these comments. As discussed in Sections D.2.39.5 and D.2.39.23, the NRC has acknowledged that a precise generic prediction of environmental impacts attributable to spent fuel pool accident releases is not possible because a variety of factors can affect the actual dose to the public in a given plant scenario. Therefore, the NRC believes that reliance upon the quantitative estimates derived from accident sequence analyses for the reference plants in generic studies like NUREG–1738 (NRC 2001b) and NUREG–1353 (NRC 1989a) is appropriate for the GEIS. The NRC acknowledges that site variables can significantly affect these estimates, such as collective dose to the public and assumed

evacuation rates (see GEIS Table F-1), but believes that the risk data analyzed in the GEIS sufficiently represents a range of outcomes and is therefore a reasonable approach for evaluating the environmental impacts of spent fuel pool accidents. Consideration of these variables are discussed in the GEIS, and Appendix F has been revised to include further discussion of these factors and their potential impacts on the quantitative estimates to ensure full disclosure. No changes were made to the Rule as a result of these comments.

(208-6) (684-2)

D.2.35.22 – COMMENT: Several commenters stated that the GEIS should have considered the effects of upstream dam failures on the safe continued storage of spent fuel. Several commenters described a complaint by Public Employees for Environmental Responsibility against NRC in the U.S. District Court for the District of Columbia, which asked the Court to require the NRC to disclose records related to the effect of upstream dam failures on nuclear power plant safety (*Public Employees for Envtl. Responsibility v. NRC*). Citing the complaint, the commenters expressed concern that the probability of dam failure causing an accident is higher than the probability of the March 11, 2011 tsunami in Japan that caused the Fukushima Dai-ichi nuclear power plant accident. The commenters also noted that the risk of upstream dam failure affects three dozen U.S. nuclear power plants. The commenters also expressed concern that the NRC is withdrawing information about these risks from public view, and that NRC engineers are providing information to the public about these risks.

RESPONSE: The NRC disagrees with the comments. As stated in GEIS Section 4.18.1.1 for spent fuel pools and Section 4.18.1.2 for dry cask storage systems, the NRC requires licensees to consider flood hazards, including those caused by dam failures, in spent fuel storage facility design bases (e.g., see Section 2.4.2 of NUREG–0800 (NRC 2012h) for reactors, and Section 2.4.4.2 of NUREG–1567 (NRC 2000) for dry cask storage facilities). As stated in GEIS Section 4.18.1.1, the NRC has also taken action to ask operating reactor licensees to reevaluate flood hazards, including the risk of upstream dam failures and the impacts of dam failures to nuclear plants, including spent fuel pools and onsite ISFSIs. The NRC will review these reevaluations and determine whether additional regulatory action to improve flood protection is necessary. Any new permanent flood protection measures for spent fuel pools or ISFSIs resulting from this process would continue to be in place during continued storage of spent fuel.

With respect to the comment on the NRC withdrawing information about risks from dam failures, NRC continues to withhold some information on specific risks to some NRC-licensed facilities from specific dam failures. The NRC's policy is to protect sensitive and security-related information and not to hide safety issues as the commenter suggests. The NRC issued a Regulatory Issue Summary (NRC 2005a), that provides procedures to be used in handling documents that may contain security-related sensitive information that could be useful, or could reasonably be expected to be useful, to a terrorist in a potential attack. More information related

to withholding of information is posted on the NRC website at http://www.nrc.gov/reading-rm/sensitive-info.html. No changes were made to the GEIS or Rule as a result of these comments.

(30-15-9) (246-25-3) (496-8) (556-1-17)

D.2.35.23 – COMMENT: One commenter submitted a technical report that described the potential for inadvertent criticality in a spent fuel pool initiated by a station blackout event. The commenter stated that a sustained station blackout, in which both offsite power and onsite emergency electrical power are lost, could result in boiloff of water from the spent fuel pool, which would eventually lower the water level in the pool to a point below the top of the spent fuel assemblies. The commenter postulated that spent fuel thus exposed would heat up and increase the temperature of surrounding materials. Above certain temperatures, the commenter stated that solid neutron absorbers in spent fuel pool racks that are required for criticality safety would melt. The commenter stated that, under certain conditions, the use of water sprays as a mitigating strategy to restore spent fuel pool cooling after the neutron absorbers are damaged or destroyed could result in inadvertent criticality. Further, the commenter asserted that some studies used in the GEIS may be flawed because they fail to account for the possible presence of fresh fuel assemblies and aluminum racks in some spent fuel pools. Another commenter stated that if high-burnup fuel rods (or other spent fuel rods) were involved in a criticality accident as the water boiled away in the pool, any degraded thermal conductivity of such fuel rods would play a significant role in increasing local fuel and fuel-cladding temperatures, because the heat flux would be high.

RESPONSE: The NRC disagrees with the comments. As stated in Section 4.18.2.1 of the GEIS, loss of offsite power was one of the events considered in NUREG–1738 (NRC 2001b) as a possible cause for a spent fuel pool fire. The GEIS states that the frequency of uncovering fuel ranges from 1.1×10^{-7} per year for power losses caused by severe weather to 2.9×10^{-8} per year for plant-related and grid-related events. These frequencies were considered in Table 3.1 of NUREG–1738 in the calculation of the total frequency of fuel uncovery per year, which ranges from 5.8×10^{-7} to 2.4×10^{-6} per year (NRC 2001b). The total frequency values are reported in Table F-1 of the GEIS as the probability per year of a spent fuel pool fire. Therefore, loss of offsite power is already considered in the GEIS as one cause of a spent fuel pool fire.

In addition, NUREG–1738 conservatively assumed that there is no recovery once the water level in the pool reaches 0.9 m (3 ft) above the top of the fuel (NRC 2001b). As stated in NUREG–1738, this simplified end state was used because recovery below this level, given failure to recover before reaching this level, was judged to be unlikely given the significant radiation field in and around the spent fuel pool at lowered water levels. This conservative assumption greatly simplified the analysis in NUREG–1738 by eliminating the need to accurately model the complex heat transfer mechanisms and chemical reactions that would occur in the fuel assemblies and pool structure as the spent fuel is slowly uncovered. This

conservative assumption also addresses the commenter's concern about whether the NRC analyzed high-burnup fuel when considering the frequency of spent fuel pool fire events, because the particular decay heat and cladding properties of high-burnup fuel did not factor into the simplified analysis in NUREG–1738 (NRC 2001b). Therefore, consideration of additional accident sequences suggested by the commenter after uncovering spent fuel (i.e., loss of neutron absorbers by melting, adding water to the pool, causing a nuclear criticality which heats the fuel, which raises the cladding temperature above the runaway oxidation temperature) would either not change or possibly lower the accident frequencies below those estimated in NUREG–1738 (NRC 2001b). For this reason, the NRC finds that the analysis in the GEIS conservatively bounds the probability of a spent fuel pool fire.

Further, as described in Section D.2.35.3 of this appendix, the NRC stated in a 2008 Denial of Petition for Rulemaking (73 FR 46204) that the probability of spent fuel pool fire is lower than estimated in NUREG–1738 (NRC 2001b). This lower probability is supported by studies completed after the September 11, 2001 attacks, which indicate that for those hypothetical conditions where air cooling may not be effective in preventing a zirconium fire (i.e., the partial draindown scenario cited by the Petitioners), the significant time between spent fuel uncovery and the possible onset of a zirconium fire provides a substantial opportunity for both operator-initiated and system-response accident mitigation. No changes were made to the GEIS or Rule as a result of these comments.

(463-2-1) (463-2-10) (463-1-12) (463-2-2) (463-1-23) (463-1-24) (463-1-25) (463-1-26) (463-1-27) (463-1-28) (463-1-29) (463-2-3) (463-1-30) (463-1-31) (463-1-32) (463-1-33) (463-1-34) (463-1-35) (463-2-5) (463-2-6) (463-2-7) (463-2-8) (463-2-9) (706-5-25)

D.2.35.24 – COMMENT: Several commenters stated that the GEIS needs more consideration of the environmental impacts of low water-resource availability on continued spent fuel pool cooling. The commenters stated that the GEIS should consider the impact of droughts, earthquakes, tsunamis, and floods on nuclear waste management.

RESPONSE: The NRC disagrees with the comments. The GEIS describes the environmental impacts of spent fuel pool storage during the short-term timeframe. Sections 4.7, Surface-Water Quality and Use, and 4.8, Groundwater Quality and Use, state that most consumptive water use ceases following reactor shutdown. Therefore, the cooling-water demand in the timeframe analyzed by the GEIS would be significantly reduced compared to the demand during reactor operations, and the impacts on surface water and groundwater consumption, even during droughts, would be SMALL.

In considering the impacts from natural events such as earthquakes, tsunamis, and floods relative to spent fuel cooling, one of the lessons learned from the Fukushima Dai-ichi nuclear power plant accident is that the NRC has required licensees to reevaluate the design basis seismic and flooding protection of structures, systems, and components for each operating

reactor, which would also include the spent fuel pool. Licensees are now providing their analyses to NRC and those analyses are being evaluated. Should additional regulatory actions to improve design basis seismic and flooding protection of structures, systems, and components be identified, then appropriate actions would be taken, and any facility improvements may continue to remain in place during continued storage. No changes were made to the GEIS or Rule as a result of these comments.

(30-21-7) (417-11)

D.2.35.25 – COMMENT: Commenters stated that the GEIS should have considered the effects on the continued storage of spent fuel of loss of offsite power and station blackout from natural causes, such as coronal mass ejections, and from man-made causes, such as cyber-attack and electromagnetic pulse weapons. One commenter asserted that these events will be more likely and more severe in the future, due to the effects of climate change, and will accumulate to further deteriorate aging infrastructure needed to restore offsite power. Several commenters cited the 1859 Carrington Event, a powerful geomagnetic storm that disrupted telegraph systems and created aurorae visible around the world. The commenters also stated specific concerns about the effect of loss of offsite power on the safety of spent fuel transfer operations in a spent fuel pool. One commenter stated that a loss of offsite power event could result in a reactor accident at a colocated operating reactor, which could, in turn, result in releases of radioactive material of sufficient magnitude to preclude the implementation of mitigating strategies at continued storage facilities. Some commenters stated that some plants have insufficient capability to cope with station blackout using battery power. One commenter stated that the NRC does not require nuclear power plant owners to be prepared for large-scale, long-term power outages, and notes that in the event of a widespread electrical transmission system blackout for an extended duration (beyond 7 days and up to several months), it may not be possible to transport necessary offsite resources to the affected power plants in a timely manner.

RESPONSE: The NRC disagrees with the comments. Section 4.18.2.1 of the GEIS describes the environmental impacts of a spent fuel pool fire caused by station blackout. In the accident postulated in the GEIS, an extended station blackout is postulated to cause failure of active spent fuel pool cooling systems, followed by a rise in pool water temperature, and ultimately sufficient loss of pool water due to evaporation to expose spent fuel to air. Given the low probability of such a high-consequence event, NRC determined that the environmental impacts are small. Sections 2.1.2.1 and 4.18.2.1 of the GEIS also describes features that may be available during an emergency as a result of regulatory actions taken after the September 11, 2001 terrorist attacks and the March 2011 accident at the Fukushima Dai-ichi nuclear power plant in Japan. Therefore, the GEIS sufficiently addresses the environmental consequences of station blackouts on spent fuel pools.

As noted in a December 18, 2012 response to Petition for Rulemaking PRM-50-96 (77 FR 74788), the NRC is also considering a petition for rulemaking requesting that the NRC amend its regulations to require licensed facilities to assure long-term cooling and unattended water makeup of spent fuel pools to mitigate prolonged electricity grid failure scenarios caused by solar storms.

Dry cask storage does not rely on electric power sources to ensure safe storage. Some electric power is used to power monitoring devices, but temporary loss of monitoring capability does not create a safety issue. No changes were made to the GEIS or Rule as a result of these comments.

(30-14-1) (112-5-5) (329-12-6) (341-1-11) (463-1-1) (463-1-13) (463-1-2) (463-1-3) (463-1-4) (463-1-6) (496-10) (498-1) (498-10) (498-11) (498-17) (498-18) (498-19) (498-2) (498-5) (498-8) (662-5) (823-26) (823-29) (823-30) (840-5) (864-12)

D.2.35.26 – COMMENT: One commenter criticized the NRC's use of the MACCS2 code to estimate the consequences of a severe accident. Specific problems identified by the commenter include ignoring real health costs, assigning too low a cost to the value of human life, useless evacuation estimates, and NRC's use of mean values computed by the code, instead of 95th percentile values. The commenter cited statements by a MACCS2 code developer that the MACCS2 code was not held to the quality assurance (QA) requirements of NQA-1 (ASME 1994). Rather it was developed using the less rigorous QA guidelines of ANSI/ANS 10.4 (ANS 1987). The commenter also stated that NRC usually assumes that accidents last only one day and never more than four days, and that MACCS2 is not capable of assessing the environmental impacts of releases that last more than four days.

RESPONSE: The NRC disagrees with these comments. The NRC uses the MACCS2 code for analysis of economic consequences of severe accidents. Land contamination and economic consequence results from MACCS2 models are used as inputs in NRC's backfit and regulatory analyses and in SAMA analyses, and have been reported in previous research studies (e.g., NUREG/CR–6451 (Travis et al. 1999), NUREG/CR–4982 (Sailor et al. 1987). Economic results and some land contamination area results are dependent on user inputs. A MACCS2 user's guide and code manual is available for reference in determining various parameter inputs. The NRC analyses referenced in the GEIS used current information at the time of each study, including analysis input information related to the estimation of land contamination and economic impact. The MACCS2 code was developed under the QA standard ANSI/ANS 10.4 (ANS 1987), which provides standard guidelines for the verification and validation of non-safety-related computer codes for nuclear industry applications, such as those used for environmental analyses. The MACCS2 code was developed for the NRC and maintained by Sandia National Laboratories (Sandia). In 2004 the DOE evaluated the MACCS2 code with respect to its use as a safety analysis code. The DOE evaluation found no evidence of programming, logic, or other types of software errors in MACCS2 that have led to non-conservatisms, but did recommend

some improvement actions for the software QA (DOE 2013b). As a result, a QA improvement plan was developed by Sandia and is ongoing as part of the development and maintenance of the MACCS code. The plan addresses software development, documentation, reviews, testing, tools used for the project, and configuration management. The NRC completed its latest review of the QA plan in 2013.

The NRC does not have a practice to limit the assumption of accident release to less than four days. The spent fuel pool accident releases in NUREG–1738 (NRC 2001b), which is a study used as a basis for the assessment of spent fuel pool fires, assumed that the entire release from a spent fuel fire takes place over 0.5 hours, which was an assumption used to model the speed of fire propagation and fire-related fuel damage. The NRC does not believe that extending the length of an accident scenario is likely to result in more significant consequences that would affect the analysis in the GEIS. Although the MACCS2 code modeling does limit plume releases to assume an accident duration of up to five days, the NRC has found this time period to be sufficient to model releases from spent fuel pool severe accidents.

The NRC's policy is to use the average, or mean, results for environmental impact analyses using MACCS2 in order to provide a more representative impact. An NRC Atomic Safety and Licensing Board and the Commission considered this issue in the Pilgrim license renewal proceeding (NRC 2012i) and declined to order the use of the 95th percentile or other metric. Past analyses have shown that the mean result from MACCS2 weather trials is typically skewed to a higher percentile than the median, e.g., the 70th percentile, which means that the arithmetic average (mean) of all trials is a higher value than the calculated results for 70 percent of the trials. In other words, the NRC's policy of selecting the mean instead of the median MACCS2 results produces a more conservative analysis. For MACCS2 inputs that use local or site-specific information such as evacuation estimates, health costs or economic factors, the generic analyses referenced in the GEIS use available information, adjusted to be reasonably bounding for the purpose.

Regarding the NRC's use of a cost value for a human life, the NRC currently uses a $2000 per person-rem conversion factor in its regulatory and environmental analyses to capture the dollar value of the health detriment resulting from radiation exposure. The NRC is currently in process of updating its use of the value of statistical life to align with the rest of the Federal agencies as part of the reassessment of the NRC's dollar per person-rem conversion factor policy. Enclosure 8 to SECY-12-0110 provides a discussion of the NRC's plans for this process (NRC 2012j). The NRC will review the Continued Storage GEIS and Rule for possible revision when warranted by significant events that may call into question the appropriateness of the Rule. No changes were made to the GEIS or Rule as a result of these comments.

(556-1-13) (556-2-17) (556-2-21) (556-2-22)

D.2.35.27 – COMMENT: The NRC received several comments that disagreed with the NRC's use of risk to describe the environmental impacts in the draft GEIS. Of particular concern to many commenters is the NRC's formulation of risk values as the product of the probability of an accident and the consequences of an accident. Commenters characterized the probabilities presented by NRC as, for example, vanishingly small and unrealistic. Many commenters expressed concern about the low probabilities used by the NRC and stated that low probability is not a substitute for protection. Several commenters suggested that the NRC consider an experiential basis for probability estimates, which would consider the actual number of nuclear accidents that have already occurred worldwide. Along these same lines, many commenters stated that the GEIS failed to recognize that nuclear accidents happen with greater frequency than the NRC's PRAs would predict. Some other commenters stated that probabilistic risk analyses do not account for multiple causes, causes related to human error, or changes in the frequency of natural events due to climate change. Some commenters stated the uncertainty inherent in a risk analysis, like the one in the GEIS, means that the NRC cannot generically conclude that the overall impacts are small for all sites and timeframes. Finally, several commenters stated that the NRC should simply disclose the consequences of an accident or consider that some consequences are so unacceptable that they outweigh even the smallest theoretical probability and even a slight chance of an accident should not be taken.

One commenter stated that the NRC's use of probability-weighted consequences to describe environmental impacts is correct, and cited *Carolina Envtl. Study Grp. v. United States* to support this view.

RESPONSE: The NRC agrees in part and disagrees in part with the comments. The NRC agrees with comments that state that the use of probability-weighted consequences to describe environmental impacts is correct. The NRC's consideration of the environmental impacts of accidents for at-reactor continued storage of spent fuel is in Section 4.18 of the GEIS. The GEIS, in the introduction to Section 4.18, states that consequences of a severe accident, should one occur, could be significant and destabilizing. However, the NRC makes impact determinations for these accidents based on risk, which considers both the low probability of these events and the potential consequences.

This formulation of the environmental impacts of severe accidents is based on the NRC's policy on reactor severe accidents in NEPA reviews (45 FR 40101). This policy states that an EIS "shall include a reasoned consideration of the environmental risks (impacts) attributable to accidents at the particular facility or facilities within the scope of each such statement. In the analysis and discussion of such risks, approximately equal attention shall be given to the probability of occurrence of releases and to the probability of occurrence of the environmental consequences of those releases" (45 FR 40101). Additionally, the policy provides that "[t]he environmental consequences of releases whose probability of occurrence has been estimated shall also be discussed in probabilistic terms" (45 FR 40101).

With respect to the balancing of consequences and probabilities, Section 1.8.5 of the GEIS states "For issues in which the significance determination is based on risk (i.e., the probability of occurrence as well as the potential consequences), the probability of occurrence as well as the potential consequences have been factored into the determination of significance." This approach is supported by the Court of Appeals in its 2012 remand (*New York v. NRC*):

Under NEPA, an agency must look at both the probabilities of potentially harmful events and the consequences if those events come to pass. See, e.g., *Carolina Envtl. Study Grp. v. United States.* An agency may find no significant impact if the probability is so low as to be "remote and speculative," or if the combination of probability and harm is sufficiently minimal (See, e.g., *City of New York v. Dep't of Transp.*, "The concept of overall risk incorporates the significance of possible adverse consequences discounted by the improbability of their occurrence.").

Therefore, the NRC disagrees with comments that NRC should not use risk when assessing environmental impacts.

The NRC used risk assessment studies which considered both internal and external events in determining the probability that a severe accident at a spent fuel pool or dry cask storage facility would occur. These studies are referenced in Sections 4.18.2 of the GEIS. Then, to determine the consequences of a severe accident at a spent fuel pool or dry cask storage facility, the NRC used the MACCS2 accident consequence computer code. The MACCS2 code is used by the NRC for severe accident consequence assessment in reactor studies and environmental impact assessments. Section D.2.35.26 of this appendix gives more information on the NRC's use of the MACCS2 code. The NRC believes that this analysis process provides a reasonable assessment of the probability and consequences of a postulated spent fuel pool or dry cask storage facility severe accident. An explanation of the determination of severe accident probability and consequences in the referenced studies is given below.

With respect to the consequence analysis of severe accidents for spent fuel pools, the NRC's analysis relies on the spent fuel pool risk assessment from NUREG–1738 (NRC 2001b) to support the conclusions in the GEIS. The NRC believes that this analysis provides a conservative bounding analysis of the impacts from a spent fuel pool fire during continued storage because the analysis in NUREG–1738 uses conservative assumptions as the basis for its analysis. In the spent fuel pool severe accident studies referenced in Section 4.18.2.1 and Appendix F of the GEIS, the NRC determined the accident probability used to weigh the consequences by performing a risk evaluation of potential accident initiators, both internal and external to the facility, and the conditional spent fuel pool fire probability. For example, Section 3 of NUREG–1738 describes this risk evaluation process which provides accident scenario information and estimates the likelihood of events. The NUREG–1738 risk evaluation included information from PRAs of internal events to estimate the likelihood of an initiating event, seismic hazard assessments from more than one source to estimate the likelihood of seismic initiators, human reliability assessments to determine the likelihood of keeping the spent fuel cooled,

thermal-hydraulic assessments of spent fuel pool loss of cooling and loss of inventory scenarios, and a simplifying assumption that if the water level were within 0.9 m (3 ft) from the top of the spent fuel, then a spent fuel pool fire would occur. This spent fuel pool risk assessment used the best available information at the time, which included visits to four decommissioning plants to improve the PRA modeling for spent fuel pools. NUREG–1738, Table 3.1 lists the frequency of fuel uncovery for each of the nine initiating events assessed. To estimate the consequences of spent fuel pool fires, NUREG–1738 refers to previous analyses of spent fuel pool severe accidents, which showed that the consequences of a spent fuel pool accident could be comparable to those for a severe reactor accident (NRC 2001b). The source term and plume release modeling in NUREG–1738 used information from NUREG–1465 (NRC 1995), *Accident Source Terms for Light-Water Nuclear Power Plants*, as a basis, with additional sensitivity studies to address concerns about ruthenium and fuel fines releases. The spent fuel pool fire source term and plume release assumptions were input values for the MACCS2 accident consequence computer code, which is used in NUREG–1738 to estimate the offsite consequences of the spent fuel pool fire. Section 3.7.1 of NUREG–1738 discusses the NRC development of the spent fuel pool severe accident source term and consequence analysis (NRC 2001b). The NRC believes that this analysis provides a reasonable assessment of the probability and consequences of a severe accident at a spent fuel pool.

The NRC's analysis of severe accidents in dry cask storage systems was developed in a similar fashion to the analysis for spent fuel pool fires, with risk assessment studies determining both the likelihood and consequences of severe accident radioactive releases. Section 4.18.2.2 of the GEIS discusses the NRC's assessment of severe accidents in dry cask storage systems, which is based on a PRA published by the NRC, NUREG–1864 (NRC 2007e). In addition, as stated in Section D.2.35.9 of this appendix, the GEIS has been updated to include relevant information from an independent study conducted by EPRI in 2004 with a PRA for bolted casks containing PWR fuel (EPRI 2004b). To analyze the risk, the authors of the PRAs developed a comprehensive list of initiating events, and evaluated the risk associated with each initiating event. Initiating events include dropping the cask during transfer operations, as well as external events during onsite storage (such as earthquakes, floods, high winds, lightning strikes, accidental aircraft crashes, and pipeline explosions). The PRAs considered potential cask failures from mechanical and thermal loads, including thermal loads caused by misloading events. Weather conditions and the population distribution in the vicinity of the site were also considered. The NRC believes that these analyses provide a reasonable assessment of the probability and consequences of a severe accident in a dry cask storage system.

Further, the NRC considered the effects of changes in the frequency of natural events due to climate change as it affects the spent fuel pool and dry cask storage system accident assessments throughout Section 4.18 of the GEIS.

Finally, the NRC recognizes the comments that supported the approach to accidents used in the GEIS. No changes were made to the Rule as a result of these comments.

(89-11) (89-13) (89-16) (89-17) (93-6) (112-7-2) (112-2-4) (112-18-7) (112-18-9) (245-31-4) (250-68-1) (303-11) (319-4) (325-19-2) (326-15-4) (326-9-4) (327-21-4) (328-9-5) (341-2-3) (341-1-5) (401-1) (410-6) (443-2) (447-1-10) (447-1-5) (465-4) (473-1-17) (473-1-18) (473-1-19) (473-1-21) (473-10-8) (491-5) (495-4) (496-14) (496-15) (496-3) (505-4) (512-1) (541-4) (553-12) (556-2-11) (556-1-12) (556-2-14) (614-10) (614-5) (614-9) (693-4-5) (705-4) (711-23) (719-3) (805-12) (827-2-12) (836-10) (836-17) (851-1) (897-6-13) (897-6-14) (910-7) (916-3-1) (916-1-2) (916-1-3) (916-1-4) (916-3-4) (916-1-6) (916-1-7) (930-1-10) (930-1-3)

D.2.35.28 – COMMENT: A commenter stated that the GEIS provides only limited quantitative information on the probabilities and consequences of severe accidents. The commenter stated that the GEIS only provides quantitative assessments of risk for seismic events that initiate spent fuel pool fires. For other accidents (cask drops, earthquakes, floods, high winds, terrorist attacks, etc.), the NRC relied upon existing design criteria and safety requirements to reach a finding that the risks are SMALL. The commenter cited *New York v. NRC*, pg. 17, which states that pointing to compliance programs is in no way sufficient to support a scientific finding that spent fuel pools will not cause a significant environmental impact during continued storage.

RESPONSE: The NRC disagrees with the comments. In the description of severe accidents, where the NRC postulated the failure of passive engineered systems such as spent fuel pool liners and walls, and dry cask storage system casks and canisters, the NRC presented the environmental impacts of those releases in the GEIS. For example, the analysis results for accidents involving a DTS are provided in Section 4.18.1.2 of the GEIS.

As the GEIS explains, the structures, systems, and components used to protect spent fuel from accidents during continued storage are designed to prevent damage that could result in releases of radioactive material. For example, spent fuel pools and dry cask storage systems are robust structures designed to withstand earthquakes, cask drops, floods, and high winds. The NRC's analysis takes the ability of these structures to withstand these events into account in its analysis, but does not rely on regulatory compliance in assessing the consequences of accidents. Rather, the NRC relies on regulatory compliance and the NRC's enforcement authority to prevent accidents from occurring. Thus, although the analysis does take into account the robust nature of these structures, that robustness is a standalone fact, independent of compliance with the NRC's regulatory requirements. No changes were made to the GEIS or Rule as a result of these comments.

(376-3) (473-1-16) (693-3-12)

D.2.35.29 – COMMENT: Many commenters stated that spent fuel storage facilities should not be sited near areas prone to man-made and natural disasters and centers of population.

Several commenters stated that spent fuel should be moved to safer locations. Specific unsuitable sites and hazards that commenters mentioned include coastal sites prone to tsunamis, hurricanes, storm surges, and other flooding hazards; any sites near centers of population; large liquid natural gas terminals; earthquake or volcano prone areas; and areas prone to landslides. One commenter stated that a GEIS may not be the appropriate framework for risk analysis because it focuses on impacts to the environment from human activities, rather than focusing on the impacts to plant activities from the environment.

RESPONSE: The NRC disagrees with the comments. Siting of spent fuel storage facilities is based on the regulations in 10 CFR Parts 50, 52 and 100 for spent fuel pools and the general license and specific license provisions of Part 72 for ISFSIs. These regulations address many of the commenters' concerns, such as population density, physical characteristics of the site (e.g., seismology, meteorology, geology and hydrology), and the nature and proximity of man-related hazards (e.g., airports, dams, transportation routes, military and industrial facilities).

Section 4.18 of the GEIS also discusses the need to review nearby military, industrial, and transportation facilities to assess the hazards from these facilities. In Sections 4.18 and 5.18, the GEIS does address impacts on plant activities from natural phenomena such as earthquakes, tornadoes, hurricanes, floods, tsunamis and climate change. Moreover, the environmental impacts of any hypothetical natural disaster causing spent fuel pool damage and fission product release to the environment have been encompassed by the pool drainage and zirconium fire analysis in Appendix F of the GEIS, including the risk analysis in Table F-1. No changes were made to the GEIS or Rule as a result of these comments.

(282-4) (329-8-3) (329-8-5) (329-11-6) (329-8-6) (410-28) (431-6) (701-15) (701-8) (819-20)

D.2.35.30 – COMMENT: One commenter provided comments on a super volcano located beneath Yellowstone. The commenter stated that all nuclear power plants in the region will need to be immediately shut down and decommissioned, and all nuclear material moved, because internal combustion engines will have a hard time running with volcanic ash in the air. The commenter asserted that ash from an active super volcano would also prevent reactor back-up diesel generators from working and would result in evacuation of plant workers. The commenter stated that the radioactive nuclear debris would turn what would be a planet wide near extinction into a complete worldwide extinction event.

Other commenters stated that the NRC should evaluate the hazard that meteor airbursts (bolides) pose to nuclear facilities. The commenters provided as examples the events that occurred on June 30, 1908 in Tunguska, Russia and on February 15, 2013 in Chelyabinsk, Russia. The commenters suggested that spent fuel should be stored underground or moved away from earthquake and fault line zones because a meteor airburst that causes a direct hit on spent fuel storage will be a major radiation release event.

RESPONSE: The NRC disagrees with the comments. Owing to NRC reactor siting and design criteria as well as the extraordinarily low probability of super volcano or bolide events in sufficiently close proximity to damage either a spent fuel pool or a dry cask storage system, these events are not considered in facility design bases. Sections 4.18 and 5.18 of the GEIS describe General Design Criterion 2 of Appendix A to 10 CFR Part 50, "General Design Criteria for Nuclear Power Plants," that requires that the design bases for structures, systems and components require appropriate consideration for the most severe of the natural phenomena that have been historically reported for the site and surrounding area. Further, 10 CFR 100.23(c), Geologic and Seismic Siting Criteria, states that "the size of the region to be investigated and the type of data pertinent to the investigations must be determined based on the nature of the region surrounding the proposed site." There is a similar provision in 10 CFR 72.103.

Nonetheless, to the extent NEPA warrants consideration of extraordinarily low probability events, the consequences of these hypothetical occurrences have been encompassed by the pool drainage and zirconium fire analysis in Appendix F of the GEIS, including the risk analysis in Table F-1. No changes were made to the GEIS or Rule as a result of these comments.

(244-13-2) (244-13-5) (329-8-7) (701-16) (701-17)

D.2.35.31 – COMMENT: Many commenters stated that the GEIS does not adequately consider the frequency, location, or severity of tsunami hazards. Commenters suggested that the NRC consider non-expert historical reports when assessing credible beyond-design-basis tsunamis or storm surge. Commenters described specific historical events, such as the 1812 earthquake that struck San Juan Capistrano and a 1930 earthquake in California off the coast of Redondo Beach. Some commenters suggested that the NRC should have considered the report of the friars that experienced the 1812 earthquake. One commenter suggested that the NRC use computational fluid dynamics to assess the hazard posed by beyond-design-basis tsunamis, which would allow licensees to develop specific mitigation plans. Several commenters stated that potential underwater landslides near Hawaii or Cumbre Vieja on the Isle de La Palma in the Canary Islands west of Africa pose risks of extreme tsunami magnitudes that should have been considered in the GEIS. Several commenters expressed concern about spent fuel rods being stored along coastlines and suggested that all spent fuel storage should be moved to high ground.

RESPONSE: The NRC disagrees with the comments. Sections 4.18.1.1 and 4.18.1.2 of the GEIS describe how flood hazards, including floods caused by tsunamis, are considered in the design bases for both spent fuel pools and dry cask storage systems. NRC general design criteria require licensees to design storage facilities to withstand the effects of natural phenomena without loss of capability to perform their safety functions. These design basis criteria also require consideration of the most severe of the natural phenomena that have been historically reported for the site and surrounding area, with sufficient margin for the limited accuracy, quantity, and period of time in which the historical data have been accumulated (see

10 CFR Part 50, Appendix A, GDC 2 and 10 CFR 72.122(a)(2)). In any event, the environmental impacts of any hypothetical tsunami causing spent fuel pool damage and fission product release to the environment have been encompassed by the pool drainage and zirconium fire analysis in Appendix F of the GEIS, including the risk analysis in Table F-1.

NUREG/CR–6966, *Tsunami Hazard Assessment at Nuclear Power Plant Sites in the United States of America* (Prasad 2009), examines tsunami hazards at nuclear power plants in the United States. The study reviews offshore and onshore modeling of tsunami waves; describes the effects of tsunami waves on nuclear power plant structures, systems, and components; and develops approaches for screening sites based on tsunami effects. The study also identifies the repository of historic tsunami data. The NRC's Office of Nuclear Regulatory Research (RES) has a comprehensive research program ongoing to look at source characterization, modeling, tsunami effects, and probabilistic hazard framework. No changes were made to the GEIS or Rule as a result of these comments.

(231-1) (231-3) (244-13-3) (244-13-4) (325-6-1) (329-8-1) (701-11) (701-12)

D.2.35.32 – COMMENT: Several commenters stated that the GEIS lacks a sufficient discussion of the environmental impacts from severe accidents to surface water and groundwater quality and to aquatic resources. One commenter also criticized the NRC's use of the MACCS2 code because that code does not include aqueous releases in its model of severe accidents. Commenters referred to the March 2011 accident at the Fukushima Dai-ichi nuclear power plant, where contaminated cooling water continues to leak into the Pacific Ocean, as an example of the kinds of effects that ought to be analyzed in the GEIS. A commenter also cited a December 2012 meeting of the NRC's Advisory Committee on Reactor Safeguards, in which NRC explained that the agency is looking into wastewater management associated with deployment of severe accident mitigation technologies. Commenters noted that impacts on aquatic and terrestrial non-human biota from accidental releases of radioactive material are not addressed in the GEIS.

RESPONSE: The NRC agrees with the comments in part and disagrees in part. The comments are correct that the GEIS does not address direct releases of radioactive material released by accidents to nearby surface water or groundwater. In Appendix F of the GEIS, which relies on a study that used the MACCS2 model, contamination of nearby surface water is postulated to occur indirectly as a result of fallout from radioactive material dispersed into the atmosphere. When analyzing environmental impacts from severe accidents for licensing actions such as license renewal or new reactor licensing, the NRC does consider direct impacts to surface water and groundwater releases in addition to the indirect impacts calculated by MACCS2; however these impacts are considered minor compared to the impacts from airborne releases. For example, as stated in Appendix E of NUREG–1437, Revision 1, the impacts on human health from surface water and groundwater contamination from spent fuel pool accidents are only a small fraction of the impacts from the airborne pathway except for a few cases where

the impacts were comparable (NRC 2013m). Therefore, the environmental impacts resulting from direct releases to surface water and groundwater from postulated accidents during continued storage would also be small, or in a few cases the same, as compared to the environmental impacts described in the GEIS that were modeled using MACCS2.

The NRC agrees the GEIS did not consider the radiological effects on non-human biota from accidents during continued storage. This is consistent with NRC's approach to evaluating environmental impacts from accidents. In general, NRC environmental analyses of radiological accidents are focused on human impacts from radiological exposure and economic impacts. The NRC does conduct an assessment of impacts to non-human biota for normal operation for licensing actions such as license renewal and licensing of a new reactor. A more detailed discussion on environmental impacts from dose to non-human biota from normal operations can be found in Section D.2.28.1 of this appendix. No changes were made to the GEIS or Rule as a result of these comments.

(473-14-1) (473-16-1) (473-14-2) (556-2-16) (622-2-10) (622-2-17) (622-3-7) (718-4-10) (718-1-2) (718-4-9) (718-5-9) (938-9)

D.2.35.33 – COMMENT: Some commenters provided comments on the financial impacts of an accident. One commenter stated that the GEIS underestimates the risk of accidents, which places significant risk on taxpayers "due to the liability issues." The commenter stated that "one accident will cap the liability of $21 billion." The commenter stated that with Congress not being able to allocate funding to Hurricane Sandy victims, it is not clear how Congress will provide sufficient funding following a nuclear disaster. Another commenter stated that there could be a trillion dollar accident based on what is decided for continued storage.

RESPONSE: The NRC disagrees with the comments. Liability resulting from a nuclear accident is outside the scope of the GEIS and Rule. Under the Price-Anderson Act (1957), licensees of large commercial nuclear reactors must obtain the maximum amount of private nuclear insurance available (currently $375,000,000). If that amount is insufficient, a retrospective nuclear insurance fund, which is funded by reactor licensees as required under the Price-Anderson Act, will be used to make up the difference. As of July 2013, the maximum amount of the retrospective insurance fund is greater than $12 billion. Under the Price-Anderson Act, the private nuclear insurance and the retrospective insurance fund make up the maximum financial protection for damages from nuclear accidents involving large commercial nuclear reactors. If the damages from a nuclear accident exceed the maximum amount of financial protection available under the Price-Anderson Act, the Act provides that "Congress will thoroughly review the particular incident and will take whatever action is determined necessary and appropriate to protect the public from the consequences of a disaster of such magnitude." If a court determines that damages from a nuclear accident may exceed the maximum financial protection under the Price-Anderson Act, the Act requires that the President submit to Congress a report that estimates the costs of the accident that exceeds the maximum financial protection available

under the Act, makes recommendations on sources for additional funds, proposes plans for full and prompt compensation to those affected, and identifies any additional legislative authorities necessary to implement compensation plans. Therefore, the NRC disagrees with the comments that there are no provisions for dealing with claims above the maximum amount in the Price-Anderson fund. No changes were made to the GEIS or Rule as a result of these comments.

(245-19-12) (329-16-4) (410-29)

D.2.35.34 – COMMENT: One commenter stated that the GEIS did not consider economic costs of accidents, and that the GEIS must include some discussion or evaluation of the socioeconomic impacts to communities from severe or design basis accidents.

RESPONSE: The NRC disagrees with this comment. Section 4.18.2 of the GEIS discusses the environmental impact of severe accidents and the NRC's estimates of the environmental impacts of a spent fuel pool fire accident, including economic consequences, are discussed in Appendix F of the GEIS. Table F-1 provides economic cost estimates that reflect the onsite property damage and offsite relocation and property damage costs. As noted in the footnotes for Table F-1, the references for these property damage values are NUREG–1353, *Regulatory Analysis for the Resolution of Generic Issue 82, 'Beyond Design Basis Accidents in Spent Fuel Pools* (NRC 1989a), and NUREG/BR-0184, *Regulatory Analysis Technical Evaluation Handbook* (NRC 1997a). Each of these reports, in turn, cite NUREG/CR–5281, *Value/Impact Analyses of Accident Preventive and Mitigative Options for Spent Fuel Pools*, as the source for property damage values (Jo et al. 1989). No changes were made to the GEIS or Rule as a result of this comment.

(619-2-1)

D.2.35.35 – COMMENT: A commenter stated that the consequences of a large release could include substantial political stress.

RESPONSE: The NRC agrees that a large airborne release of radioactive material in the United States resulting in a major event could have socio-political impacts. However, the Federal, State, and local governments regularly demonstrate their ability to deal with extreme natural, man-made, and terrorist events. For example, the Federal government routinely provides assistance to States and local communities to respond to natural disasters, such as earthquakes, hurricanes, and tornadoes. In the event of the release of radioactive material from a spent fuel storage site, the NRC, other Federal agencies, and State and local authorities would use their experience and planning to provide an appropriate response to the event. See Sections D.2.44.2 and D.2.44.5 of this appendix for additional information regarding the response capabilities of the NRC and other authorities. No changes were made to the GEIS or Rule as a result of these comments.

(897-6-15) (916-1-5)

D.2.35.36 – COMMENT: One commenter stated that the GEIS did not adequately consider people's perception of risk associated with continued storage of spent fuel. The commenter stated that the perception of risk, whether or not it is supported by actual statistical risk, can have negative environmental consequences. The commenter provides examples of declining property values and low participation in recreational activities in areas surrounding nuclear facilities, which has local negative economic effects. The commenter also stated that the NRC's defense-in-depth philosophy should also include "capitalizing on every opportunity to obtain site-specific information on vulnerabilities and risks, and design appropriate management and mitigation strategies accordingly." The commenter stated that a decision to "rely on a generic evaluation of environmental impacts and codify that no site-specific evaluation of continued storage is required is counter to the NRC's own stated philosophy."

RESPONSE: The NRC disagrees with the comment. In its remand of the 2010 Waste Confidence Rule, the Court of Appeals for the D.C. Circuit continued the long history of Federal courts approving a generic approach to the analysis of the environmental impacts of nuclear power reactor operation. The Court endorsed the NRC's generic approach, stating that there is "no reason that a comprehensive general analysis would be insufficient to examine onsite risks that are essentially common to all plants" (*New York v. NRC*). The NRC believes that a generic approach is appropriate for the assessment of accidents because the GEIS makes impact determinations that apply to all spent fuel storage sites. With respect to the consideration of public fears that result in declining property values and public avoidance of the area around storage facilities, in *Metropolitan Edison Co. v. People Against Nuclear Energy*, the Supreme Court held that NEPA does not require the NRC to consider psychological health effects resulting from the risk of nuclear accident because this impact was too attenuated from the Federal action. No changes were made to the GEIS or Rule as a result of this comment.

(473-3-1)

D.2.35.37 – COMMENT: One commenter agreed with the impact assessments in the GEIS. The commenter noted that the NRC's findings of SMALL impacts of the risks of postulated accidents and of potential acts of sabotage or terrorism to spent fuel pools and dry casks, from short-term to indefinite storage, are in agreement with the findings of the U.S. Nuclear Waste Technical Review Board, American Physical Society, and the office of Senator Feinstein. The commenter described the U.S. Nuclear Waste Technical Review Board findings that reinforced-concrete structures for dry storage systems can be designed with a life over 100 years and longer. The commenter summarized the American Physical Society position as "there are no technical barriers to the safe and secure interim storage of spent fuel as long as adequate resources and attention are devoted to maintaining storage facilities." Senator Feinstein's office was quoted as stating, "no technical barriers to the safe and secure interim storage of spent fuel as long as adequate resources and attention are devoted to maintaining storage facilities."

RESPONSE: This comment agrees with the NRC's impact assessment related to potential accidents and potential acts of sabotage. Because it does not provide any specific information related to the environmental impacts addressed in the GEIS, no changes were made to the GEIS or Rule as a result of this comment.

(325-17-2)

D.2.35.38 – COMMENT: One commenter stated that the GEIS did not consider qualitative factors in the analysis of accident impacts. The commenter stated that the qualitative factors that should be considered include human error, meteorology, future sea-level rise, manufacturing defects, and corrosion rates. The commenter paraphrased portions of a notation vote by Chairman Macfarlane on SECY-12-0157 in support of the comment, in which the Chairman stated that uncertainties in attempting to quantify an accident frequency should be offset by prudent defense-in-depth (NRC 2012k).

RESPONSE: The NRC agrees in part and disagrees in part with the comment. The NRC agrees with the concept that uncertainties should be offset by prudent defense-in-depth, and incorporates that balance into licensing and oversight of nuclear facilities. The NRC disagrees that uncertainties related to pertinent qualitative factors have not been considered in analysis of accident impacts. To address changing conditions at the site, Section 6.4.17 of the GEIS provides a discussion of potential cumulative accident impacts affected by qualitative factors, such as the general trends and activities at or near spent fuel storage facilities discussed in Section 6.3.1 of the GEIS. These general trends and activities include changes in site characteristics due to climate change, overall U.S. population growth, and cumulative impact from accidents from nearby nuclear power plants and spent fuel storage facilities. No changes were made to the GEIS or Rule as a result of this comment.

(556-2-13)

D.2.35.39 – COMMENT: Some commenters provided comments concerning earthquake hazards at nuclear power plants located in the western half of the United States. Commenters stated that by relying on a 1994 report (NUREG–1488, *Revised Livermore Seismic Hazard Estimates for 69 Nuclear Power Plant Sites East of the Rocky Mountains* [NRC 1994a]), the NRC has not adequately supported its generic findings regarding earthquake risks because that study did not include western plants. Several commenters described specific concerns about seismic risk at the Diablo Canyon Nuclear Power Plant.

RESPONSE: The NRC agrees in part and disagrees in part with the comments. The comment is correct that NUREG–1738 (NRC 2001b) relied on the seismic hazard estimates in NUREG–1488 (1994a). However, the NRC has continued to assess the safety implications of earthquake hazards. In 2005, the NRC identified Generic Issue 199 in which the NRC concluded that seismic design of currently operating reactor and ISFSI facilities provides safety

margin from new seismic hazards in the Central and Eastern United States, but that the likelihood of exceeding the seismic hazard values used in plant design and in previous evaluations may be higher than previously understood for some currently operating Central and Eastern United States sites (NRC 2005b). As discussed in Section 4.18.1.1 of the GEIS, "Design Basis Events in Spent Fuel," the NRC resolved Generic Issue 199, by completing a limited scope screening analysis and a safety/risk assessment. For Generic Issue 199, the NRC performed an assessment to determine the implications of updated probabilistic seismic hazards in the Central and Eastern United States on 96 operating nuclear power plants. From this assessment, the NRC confirmed that all operating nuclear power plants are safe and that the overall seismic risk estimates remain small for operating nuclear power plants and the current seismic design provides a safety margin. Also, after publication of the draft GEIS, the NRC issued COMSECY–13–0030, an NRC study on the potential for requiring expedited transfer of spent fuel from reactor spent fuel pools to dry cask storage (NRC 2013n). In the regulatory analysis in COMSECY–13–0030, the NRC stated that it:

> used the U.S. Geological Survey (USGS) 2008 model to evaluate seismic hazards at Central and Eastern U.S. (CEUS) nuclear power plant sites in this analysis. Although the USGS model considers sites in the western United States (including Columbia, Diablo Canyon, Palo Verde, and San Onofre), the staff has not performed the necessary analyses for these sites to include them in this analysis. Considering the robust designs of spent fuel pools, especially in more seismically active areas in the western United States, the staff concludes that public health and safety are adequately protected. Upon completion of the Near-Term Task Force Recommendation 2.1 seismic reevaluation, the staff will confirm that the seismic risk for spent fuel pools is consistent with the risk assumed in this analysis.

Appendix F of the GEIS has been updated to include the more recent information from COMSECY–13–0030 (NRC 2013n). Further, the consequences of a severe earthquake, with resulting spent fuel pool drainage and an uncontrolled zirconium fire, are encompassed by the pool drainage and zirconium fire analysis in Appendix F of the GEIS, including the risk analysis in Table F-1. No changes were made to the Rule as a result of these comments.

(287-5) (326-8-5)

D.2.35.40 – COMMENT: One commenter stated that the GEIS did not evaluate the indirect impacts to the State of Connecticut of displaced individuals fleeing an accident involving high-level nuclear waste in long-term storage at Indian Point and that the NRC is required to assess these indirect impacts under NEPA.

RESPONSE: The NRC disagrees with the comment. The costs of temporary relocation and evacuation resulting from a severe accident are included in Appendix F of the GEIS. In

particular, the total onsite and offsite economic impacts are described in the last column of Table F-1. The value of offsite property damage within 80 km (50 mi) of the postulated spent fuel pool fire accident is included in those figures. No changes were made to the GEIS or Rule as a result of this comment.

(473-10-17)

D.2.36 Comments Concerning Security and Terrorism

D.2.36.1 – COMMENT: Without providing specific comments on the GEIS or proposed Rule, several commenters stated general concerns that the GEIS either did not or did not thoroughly consider environmental impacts caused by terrorism. One commenter raised specific concerns about the risk of terrorist attacks at Indian Point. Another commenter summarized the costs of new NRC rules for high-caliber fully automatic weapons.

RESPONSE: The NRC takes very seriously the security of all NRC-regulated facilities. Security requirements at NRC-regulated facilities are based on an analysis of the design basis threat (DBT) to these facilities as stated in Section 4.19.1 of the GEIS. In cases when a new threat is detected, as stated in Section 4.19.2 of the GEIS, immediately effective security orders may be issued (and have been in the past) to address emerging threats. In addition, the NRC has a security advisory system that is able to send up-to-the-minute security information to all licensees and supporting government agencies.

As stated in Section 4.19 of the GEIS, because acts of terrorism within the United States are considered to have a low probability of success, the NRC does not hold NRC-regulated facilities responsible for the economic impacts of terrorist attacks. However, the NRC does hold its regulated facilities responsible to protect against specific security scenarios related to terrorist attacks, which are described in NRC adversary characteristic and DBT documents. For security reasons these documents are not available to the public and specific security scenarios and regulated facilities included in these documents cannot be discussed in detail here. In general, however, security scenarios include land assault, vehicle assault, insider assistance mitigation, access authorization, cyber-attacks, and mitigation of large fires.

The NRC coordinates with the U.S. intelligence community to perform threat assessments for NRC-regulated facilities and to evaluate threats to NRC and licensee staff traveling overseas. The NRC provides the Commission intelligence updates on a regular basis, and staff who work on security-related issues are provided intelligence/threat updates bi-weekly. In addition, the NRC performs extensive analysis of intelligence information gathered from classified and open sources and provides the results of this analysis, including recommendations for increasing or decreasing the DBT for NRC-licensed facilities, in an annual written report to the Commission. At this time, there is no specific threat to the nuclear energy sector in the United States.

On September 11, 2009, the NRC published "Firearms Guidelines" for the use of firearms by security personnel employed by licensees. This action was taken under the Commission's authority provided in Section 161A of the AEA, as amended by the Energy Policy Act of 2005. Section 161A provides the NRC with new authority that will enhance security at Commission-designated facilities. Section 161A granted the NRC the authority to allow licensees to use enhanced weapons to augment or increase their defensive capability. An example of an enhanced weapon is a machine gun. Prior to the enactment of Section 161A, NRC licensees typically were prohibited under Federal law, and in some cases State law, from possessing and using machine guns. This enhanced weapons authority is voluntary, and licensees must apply to the NRC to obtain enhanced weapons authority. Requirements for the use of specific types of weapons are discussed in Sections 4.19.1 and 4.19.2 of the GEIS. No changes were made to the GEIS or Rule as a result of these comments.

(100-29) (377-5-12) (417-7) (447-1-13) (522-3) (646-20) (836-20) (836-23) (836-39) (836-60) (916-1-13) (930-3-12) (930-1-13) (930-2-13) (930-1-16) (1007-5)

D.2.36.2 – COMMENT: A commenter, citing NUREG/BR-0175 (NRC 2010d), provided a comment regarding how the terrorist attacks on September 11, 2001 revealed weaknesses in U.S. nuclear facility security. The commenter stated that the GEIS terrorism impact assessment does not provide a detailed description of the environmental impacts of a successful terrorist attack, and does not identify, discuss, and evaluate alternatives and mitigation measures. The commenter also stated that the GEIS fails to account for cumulative impacts, segments review, and does not address site-specific issues relevant to the Indian Point Nuclear Power Plant and the New York City metropolitan area.

RESPONSE: The NRC disagrees with the comment. Section 4.19 of the GEIS describes both the probability and consequences of potential terrorist attack on a spent fuel pool and a dry cask storage system. Alternatives to the proposed action are considered in the GEIS including those that improve the efficiency of the NRC's licensing process. Regarding mitigation, the GEIS describes a number of features and measures existing at nuclear facilities that are deterrents to terrorist attack, including spent fuel pool structural features and effective and visible physical security protection measures. The NRC does not believe there is any meaningful way to consider the cumulative risks of terrorism as suggested by the commenter and cumulative effects of terrorist attacks were not considered in the GEIS. The comment did not describe how conditions at Indian Point Nuclear Power Plant and New York City differ enough so that the public health and property damage consequences of the spent fuel pool fire described in Appendix F of the GEIS, and summarized in Section 4.19 of the GEIS, would not apply. Therefore, it is not clear what changes or additional information the comment is requesting. No changes were made to the GEIS or Rule as a result of this comment.

(718-3-5)

D.2.36.3 – COMMENT: A commenter provided several reasons why the environmental impacts of successful terrorist attacks cannot be determined generically. The commenter also stated that characteristics of an attack will depend on the physical constraints of the facility, the geography of the transportation routes, and such variables as the training and expertise of the local first responder community to address any radiological issue that arises.

RESPONSE: The NRC disagrees with the comment. In *New York v. NRC*, the Court of Appeals endorsed the NRC's generic approach to analyzing the environmental impacts of the continued storage of spent fuel, stating that there is "...no reason that a comprehensive general analysis would be insufficient to examine onsite risks that are essentially common to all plants." The NRC believes that a generic approach is appropriate for a terrorism analysis because the GEIS makes impact determinations for spent fuel (e.g., light water reactor fuel) stored in accordance with common NRC requirements in similar structures at all spent fuel storage sites. The points raised by the comment about the geography of nearby transportation routes and the level of training and expertise of the local first responder community are not considerations in either a site-specific environmental review or the generic determination in the GEIS. In addition, the assumptions used in the GEIS to describe offsite environmental consequences to public health (i.e., public dose) would not vary whether offsite dispersal results from either a terrorist event or a serious accident. No changes were made to the GEIS or Rule as a result of this comment.

(867-3-16)

D.2.36.4 – COMMENT: Many commenters express concern that the NRC has understated the environmental impacts of terrorist attacks and sabotage on spent fuel during continued storage. Commenters disagree with the statistical formulation of risk (probability multiplied times consequences) and state that the qualitative low probability of successful attack is either understated or unjustified. Many commenters stated that the consequences of a successful attack would be so large that the NRC's statistical formulation of risk should not apply.

RESPONSE: The NRC disagrees with the comments. As described in Section 4.19 of the GEIS, the NRC has found that the probability of significant release from a terrorist attack on spent fuel during storage is very low. The NRC's finding is based on enhanced security requirements since the terrorist attacks of September 11, 2001, which include both NRC and national anti-terrorist measures to prevent and mitigate successful attacks; the NRC's ongoing threat assessments; and the protective nature of spent fuel pools and dry cask storage systems. The NRC is not applying a quantitative estimate of risk for security events because the probability is numerically indeterminable. However, the NRC has weighed both the qualitative probability and estimates of the consequences of a successful terrorist attack on both spent fuel pools and dry cask storage systems before reaching the conclusion that the environmental risk is SMALL.

As noted earlier, the NRC continues to believe that sufficient measures have been taken by the NRC and other Federal agencies to reduce the public health and environmental risk of terrorist attack on spent fuel during continued storage to an acceptable level. The NRC continuously monitors the threat environment and makes adjustments to these measures, as necessary, to respond to changing threat levels.

With respect to balancing consequences and probabilities, Section 1.8.5 of the GEIS states "...for issues in which the significance determination is based on risk (i.e., the probability of occurrence as well as the potential consequences), the probability of occurrence as well as the potential consequences have been factored into the determination of significance." This approach is supported by the D.C. Circuit Court of Appeals in its 2012 remand: "Under NEPA, an agency must look at both the probabilities of potentially harmful events and the consequences if those events come to pass." (citations omitted) (*New York v. NRC*). For this reason, the NRC does not agree that it should determine a level of consequence above which the probability would no longer be considered in the determination of environmental impacts. No changes were made to the GEIS or Rule as a result of these comments.

(45-6-9) (59-5) (59-7) (89-15) (205-10) (279-1) (325-22-3) (326-56-5) (417-3) (441-1) (443-3) (447-1-11) (447-1-15) (447-1-6) (495-6) (556-4-3) (603-22) (604-8) (640-7) (693-2-4) (826-10) (826-9) (836-58) (836-59) (897-6-17) (916-3-21) (916-3-6) (930-3-10) (930-3-11)

D.2.36.5 – COMMENT: One commenter stated that, given the long timeframe covered by the GEIS, provisions should be made for periodic updating of the terrorism and sabotage analyses to address (1) advances in the technology of terrorism and counter-terrorism, (2) changes in population density near storage facilities and shipment routes, and (3) changes in understanding and definition of the design basis events and DBTs.

RESPONSE: The NRC agrees in part and disagrees in part with the comment. The NRC has procedures to deal with a changing threat environment. The NRC undertakes an annual review of the threat environment and adjusts security requirements at power reactors and spent fuel storage facilities accordingly. To ensure that these threat statements remain a valid basis for the design of physical protection systems, the NRC routinely reviews and analyzes a range of information from the U.S. intelligence community. The NRC disagrees, however, that the GEIS security and terrorism analysis needs to be periodically updated. If information was received that called into question the adequacy of the DBT statements, the NRC would immediately notify the Commission, which then would consider enhancing security requirements in response to changing threat conditions. Section 4.19.1 of the GEIS has been revised to clarify the NRC's practice of annually reviewing the threat environment. No changes were made to the Rule as a result of this comment.

(706-4-4)

D.2.36.6 – COMMENT: Several commenters stated concerns regarding the proliferation risk of aged spent fuel. The commenters stated that aged spent fuel is susceptible to theft because shorter-lived radionuclides have disappeared, which reduces the direct and immediately harmful radiation levels that otherwise prevent successful theft. One commenter stated that the proliferation risk issue should have been addressed in the GEIS for the DTS, as well as for dry cask storage systems. An industry group described the design of dry casks and stated that dry casks will continue to provide a protective barrier and offer a robust security protection system relative to any terrorist attack.

RESPONSE: The NRC agrees in part and disagrees in part with the comments. In Section 4.19.2 of the GEIS, the NRC acknowledges that spent fuel radiation levels will decrease over time, which could make spent fuel more susceptible to theft or diversion (i.e., a more attractive target to individuals with malevolent intent) in the future. In Section 4.19 of the GEIS, the NRC considered both light water reactor spent fuel and non-light water reactor spent fuel, and agrees that, because of the increased risk from theft or diversion, additional security requirements may be necessary in the future if spent fuel remains in long-term storage. Therefore, the NRC disagrees that the GEIS did not consider changing risk of theft or diversion for spent fuel stored in dry casks at an ISFSI and repackaged in a DTS. The NRC agrees with comments that described the design of dry casks and stated that dry casks will continue to provide a protective barrier and offer a robust security protection system relative to any terrorist attack. These features are described in Section 4.19.2 of the GEIS. No changes were made to the GEIS or Rule as a result of these comments.

(246-29-11) (246-11-3) (738-10) (827-3-2) (919-2-7)

D.2.36.7 – COMMENT: One commenter stated that the theft and diversion risk of aged spent fuel should have been addressed in the GEIS for the DTS, as well as for dry cask storage systems.

RESPONSE: The NRC agrees with the comment that Section 4.19.2 of the GEIS did not explicitly address the theft or diversion risk during use of a DTS (i.e., a structure/system used to transfer spent fuel from one dry storage cask to another storage cask or to a spent fuel transportation package). Accordingly, the GEIS has been revised to address the risk of radiological sabotage and theft and diversion for a DTS. No changes were made to the Rule as a result of this comment.

(841-9)

D.2.36.8 – COMMENT: Many commenters stated that the GEIS did not consider the environmental impacts of intentional aircraft attack on either spent fuel pools or dry cask storage systems. Several commenters stated that General Electric boiling water reactors with Mark I and Mark II containment designs are particularly vulnerable to aircraft attack due to the

elevation of the spent fuel pool in the reactor building. One commenter stated that 10 CFR Part 73, "Physical Protection of Plants and Materials," is deficient because it does not provide for protection against large aircraft attacks. Several commenters also stated that PRAs are unreliable and that the risks and probability of an aircraft attack are higher than the GEIS states. One commenter stated that the risks of an aircraft attack will increase over time as advances in technology make hijacking easier.

RESPONSE: The NRC disagrees with these comments. The NRC's consideration of the environmental impacts of an intentional attack by aircraft is provided in Section 4.19.1 of the GEIS. In this analysis, the NRC relies on its regulatory requirements and national response procedures that were developed after the attacks of September 11, 2001, to describe the very low probability of successful attack on spent fuel pools, including attacks by aircraft. As stated in the GEIS, this approach is consistent with the analyses in the NRC's 2008 denial of a petition for rulemaking by the Attorneys General of the Commonwealth of Massachusetts and the State of California (73 FR 46204). Section 4.19.1 of the GEIS also stated that the consequences of a very-low-probability successful attack are the large impacts described in Appendix F of the GEIS for a spent fuel pool fire. The NRC concluded that the environmental impact of successful terrorist attack on a spent fuel pool is SMALL because the risk (which weighs both the probability and consequences) of a successful attack with the consequences described in Appendix F is SMALL. With respect to whether certain plant designs are more vulnerable to aircraft attack, NRC's security requirements and other factors, such as national anti-terrorist measures to prevent aircraft hijackings, for example, apply to all storage facilities, including boiling water reactors with Mark I and II containment structures and elevated spent fuel pools. Therefore, the determination that the impacts are SMALL applies to all storage facilities.

As stated in Section D.2.36.19 of this appendix, intentional aircraft attack is not part of the DBT considered in 10 CFR 73.1. For any accident scenario, including an aircraft impact, the NRC has determined that, shortly after the start of continued storage the risk of a radiation release to the public is much less than the risk of a release from an operating plant and the consequences of a release are, in most cases, significantly less than that of an operating reactor (79 FR 1901). This is because as the spent fuel ages, the generation of decay heat decreases. After a certain amount of time, the overall risk of a zirconium fire becomes insignificant because of two factors: (1) the amount of time available for preventive and mitigating actions; and (2) the increased probability that the fuel is air-coolable.

For new power plant applications, the NRC requires applicants to perform a design-specific assessment of the effects on the facility of the impact of a large, commercial aircraft. The applicant is expected to identify and incorporate into the design those features and capabilities to show that, with reduced use of operator actions, the spent fuel cooling or spent fuel pool

integrity is maintained. These features and capabilities would continue to remain part of the plant's safety basis even after plant shutdown and while fuel continues to be stored in the spent fuel pool.

The NRC continues to believe that it and other Federal agencies have taken sufficient measures to reduce the public health and environmental risk of terrorist attack to an acceptable level. With respect to whether aircraft hijackings could become easier in the future, the NRC will continuously monitor the threat environment and make adjustments to required security measures, as necessary, to respond to changing threat levels. No changes were made to the GEIS or Rule as a result of these comments.

(30-4-3) (112-29-2) (112-11-5) (316-1) (325-22-1) (329-32-6) (348-8) (352-7) (373-8) (419-5) (556-1-26) (556-1-32) (628-3) (826-11) (826-12) (826-14) (826-19) (826-28) (862-2) (933-7)

D.2.36.9 – COMMENT: Several commenters stated that spent fuel in storage is well-protected and that the probability of a successful weapon attack on dry storage systems is small. Two commenters stated that the rugged designs of dry cask storage systems makes the breaching of containment boundaries most unlikely. A commenter noted that only devices with high-energy densities or specific types of military weapons have a real opportunity of compromising dry casks. The commenter further stated that the probability of breaching a dry cask is vanishingly small because a successful breach requires that the weapon be precisely and closely placed. The commenter stated that even in the event of a successful breach, the amount of radioactive material release is extremely limited and the affected area would be localized. The commenter noted that the public doses would be below unregulated doses received by the public from non-nuclear industries. Citing a study by Mr. Robert Luna, an industry group also provided extensive comments regarding postulated attacks on dry cask storage systems. In addition to providing information on the low likelihood of successfully breaching a cask, the group provided information on the small environmental impacts that could result from successfully breaching a cask.

RESPONSE: The NRC agrees in part and disagrees in part with the comments. In general, the NRC agrees that the likelihood of penetrating a dry storage cask is low, as discussed in Section 4.19 of the GEIS. However, the NRC disagrees that this qualitative assessment of likelihood is better described as "most unlikely" or "vanishingly small." In assessing spent fuel dry storage systems, the GEIS relies on the NRC's assessment of the ability of high-energy devices to penetrate massive and robust dry storage systems. While certain devices may have the capability to penetrate a cask's confinement boundary, such breaches are not likely to cause a significant release of radioactivity to the environment. In developing Sections 4.19 and 5.19 of the GEIS, the NRC relied upon a significant body of analytic and experiential spent fuel vulnerability studies performed at U.S. government facilities over the last 30 years. Separately, the NRC continues to assess the potential release consequences of a hypothetical successful

attack, given the multiple inherent design features that would limit the spread of radioactive material from such a hypothetical attack. No changes were made to the GEIS or Rule as a result of these comments.

(250-27-3) (275-3) (825-5) (827-3-1) (827-3-3) (827-3-4) (827-3-5) (827-3-6)

D.2.36.10 – COMMENT: One commenter described in detail the potential for an attack-induced cask fire. In their analysis, the commenter examined the possibility of an attacker breaching a dry cask containing 32 pressurized water reactor spent fuel assemblies and "with a few additional steps," readily initiating a cask fire. They also compared the level of effort and attractiveness of a dry cask attack with an attack on a spent fuel pool. The commenter recommended that, "...in assessing the overall impacts of storing spent fuel or HLW, the proposed EIS [the GEIS] should consider the implications of alternative storage options for a national strategy of protective deterrence." The commenter also stated that the cumulative frequency of successful attacks on ISFSIs could be substantial and the consequences of a successful attack could be severe, and therefore, because the commenter disagrees with the arithmetic definition of risk, the commenter believes that the environmental impacts of attacks on ISFSIs are LARGE. The commenter also concluded that the cumulative frequency of successful attacks on pools is likely to exceed the cumulative frequency of successful attacks on ISFSIs. However, because the GEIS contemplates a future in which there would be ISFSIs and no pools, they asserted that the cumulative frequency of successful attacks on ISFSIs could be comparable to the currently applicable cumulative frequency of successful attacks on pools, if there were no change in the risk environment. Further, the commenter asserted that, whether or not pools coexist with ISFSIs in the future, the risk environment could become more adverse, leading to an increase in the cumulative frequency of successful attacks on ISFSIs.

RESPONSE: The NRC agrees in part and disagrees in part with the comments. The NRC agrees that, given the chemical properties of the zirconium cladding containing light water reactor spent fuel, a theoretical possibility exists regarding the initiation of a rapid, exothermic zirconium oxidation reaction (i.e., a zirconium fire). Consequently, the NRC continues to study this phenomenon and the differences that exist between spent fuel stored in pools and spent fuel stored in dry storage casks to assess any potential likelihood and consequence issues. However, the NRC has no information to substantiate the comment's claims on "the cumulative frequency of attacks" and the comment does not document the source of these statements. Fundamentally, the NRC has based its assessment of potential environmental impacts of attacks on ISFSIs as SMALL due to the massive and robust nature of storage cask confinement and shielding boundaries and the significant difficulties inherent in creating a self-sustaining zirconium oxidation reaction.

In addition, the NRC believes that dry cask storage and current security requirements as stated in Section 4.19 provide high assurance of adequate protection of public health and safety;

therefore, the GEIS does not need to include the implications of alternative storage options. No changes were made to the GEIS or Rule as a result of these comments.

(916-1-1) (916-3-11) (916-3-13) (916-3-7) (916-3-8) (916-3-9) (919-7-19) (919-4-7)

D.2.36.11 – COMMENT: Many commenters stated that nuclear power plants and spent fuel are attractive targets for terrorists, for both radiological sabotage and theft and diversion attacks. Several commenters stated that spent fuel pools are more attractive than dry cask storage systems, and that spent fuel pools at General Electric boiling water reactors with Mark I and II containment structures are more attractive targets than spent fuel pools in pressurized water reactors, owing to the elevation of the spent fuel pools in the Mark I and II reactor buildings. One commenter stated that the June 2, 2006, ruling in *San Luis Obispo Mothers for Peace v. NRC*, lends credence to the proposition that onsite dry cask storage might lead to or increase the risk of a terrorist attack because (1) the presence of the casks would increase the probability of a terrorist attack on the plant, and (2) the casks themselves would be a primary target for a terrorist attack. Another commenter stated that some reactors are more likely targets than others because of their symbolic value as a target and proximity to large population centers. The commenter noted that the Pilgrim plant is a symbolic target, and that a successful strike would impact a large population. The commenter also stated that Indian Point is close to dense population clusters, notably New York City, and also is very close to West Point.

RESPONSE: The NRC disagrees with these comments. The NRC continuously interacts with the U.S. intelligence community on the potential targeting of NRC-regulated facilities. The NRC has determined that a general credible threat exists regarding the potential for an attack against an NRC-regulated facility. However, the NRC has no information that would indicate likely terrorists have either a preferential desire or a preferential capability to attack NRC-regulated facilities, as compared to other critical infrastructure and key resources in the United States. Moreover, the NRC has no information that would indicate that persons with a malevolent intent have a preferential desire or capability to attack particular types or locations of spent fuel storage facilities (as posited in the comments). Consequently, the NRC views the assessment set forth in the GEIS as appropriate. No changes were made to the GEIS or Rule as a result of these comments.

(112-7-5) (205-8) (241-1) (246-6-2) (250-29-3) (341-1-17) (355-6) (410-23) (541-5) (552-1-4) (556-1-25) (618-4) (714-2-2) (722-2) (836-61) (836-62) (864-11) (916-3-12) (930-3-13) (930-3-14) (930-3-20) (982-1) (1007-2)

D.2.36.12 – COMMENT: One commenter stated that the NRC should have included information from NUREG–0575, *Final Generic Environmental Impact Statement on Handling and Storage of Spent Light Water Power Reactor Fuel*, in its description of the environmental

consequences of terrorist attack in the GEIS. The commenter believes that the information in Appendix J of NUREG–0575 on malevolent acts could, with slight adjustment, explain how to readily initiate a pool fire.

RESPONSE: The NRC disagrees with this comment. In Appendix J of NUREG–0575, *Final Generic Environmental Impact Statement on Handling and Storage of Spent Light Water Power Reactor Fuel* (NRC 1979), the NRC considered four variations (modes) of an adversary attack involving the placement of high explosives underwater in a spent fuel pool. The explosion is postulated to break spent fuel rods, which causes radioactive gases contained in the fuel to escape the cladding, contaminate the spent fuel pool water, bubble to the surface, and escape to the environment through the building ventilation system. None of these modes postulated a drain down of the pool and subsequent spent fuel pool fire, which has consequences that are much larger than the consequences reported in Chapter 5 of NUREG–0575 (NRC 1979) for the sabotage events considered in Appendix J. The environmental impacts of a spent fuel pool fire considered in Appendix F of the GEIS are more severe than and bound the sabotage events considered in Appendix J of NUREG–0575 (NRC 1979). Therefore, there is no need to include the analysis of less severe events described in NUREG–0575 (NRC 1979) in the GEIS. No changes were made to the GEIS or Rule as a result of this comment.

(916-2-4)

D.2.36.13 – COMMENT: Several commenters stated that according to an unspecified National Institutes of Health study, an attack on a nuclear reactor could result in a "...massive release of radioactive material." The commenter also cited a comment by David Kyd, spokesman for the IAEA, stating that "[Reactors] are built to withstand impacts, but not that of a wide-bodied passenger jet full of fuel. These are vulnerable targets, and the consequences of a direct hit could be catastrophic."

RESPONSE: These comments are beyond the scope of the GEIS and Rule. By focusing on attacks on operating reactors, including attacks using wide-bodied passenger jets, the comments did not address the environmental impacts of attacks on spent fuel storage facilities during the continued storage timeframes. No changes were made to the GEIS or Rule as a result of these comments.

(686-4) (757-5) (908-4) (951-4)

D.2.36.14 – COMMENT: One commenter, after describing the cumulative risk of accidental plane crash at 50 independent sites, stated that "...all that need be done is to place all of the casks in one area, and guard it carefully."

RESPONSE: The NRC agrees in part and disagrees in part with the comment. The NRC agrees with the comment to the extent that the NRC's regulatory framework for dry cask storage

provides for licensing of away-from-reactor storage facilities at which spent fuel from a number of operating reactors might be consolidated. Therefore, the NRC agrees that the consolidation suggested by the commenter is feasible and may accrue certain benefits, such as providing offsite storage capacity for licensees that are either unable to construct at-reactor storage facilities or are approaching at-reactor storage limits.

However, the NRC disagrees that to place all casks in one area would be more secure than having storage at multiple sites. In Section 5.19, the GEIS found that the environmental impacts from security-related events at away-from-reactor storage are similar to those for at-reactor storage. Therefore, the NRC disagrees that away-from-reactor storage would mitigate environmental impacts. No changes were made to the GEIS or Rule as a result of this comment.

(100-18)

D.2.36.15 – COMMENT: One commenter stated that it is feasible to reduce the likelihood of zirconium cladding fire following a loss-of-pool-coolant event using readily implemented measures, including reconfiguring the spent fuel in the pools (i.e., redistribution of high decay-heat assemblies so that they are surrounded by low decay-heat assemblies) to more evenly distribute decay-heat loads and enhance radioactive heat transfer; limiting the frequency of offloads of full reactor cores into spent fuel pools, requiring longer shutdowns of the reactor before any fuel is offloaded, providing enhanced security when such offloads must be made; and developing a redundant and diverse response system that would be capable of operating even if the pool or overlying building were severely damaged. The commenter suggested that potential vulnerabilities of spent fuel pools to terrorist attack is a plant-design issue, and that these vulnerabilities can be understood only by examining the characteristics of spent fuel storage at each plant.

RESPONSE: The NRC agrees in part and disagrees in part with the comment. The NRC agrees that, in the highly unlikely event that an attack results in successfully draining or partial draining of a spent fuel pool, the mitigation measures suggested by the comment could reduce the likelihood of spent fuel pool fires. However, as stated in NRC's 2008 denial of a petition for rulemaking by the Attorneys General of the Commonwealth of Massachusetts and the State of California (73 FR 46204), the NRC has found that the risk of a spent fuel pool zirconium fire, whether caused by an accident or a terrorist attack, is very low. The NRC relied on several factors that apply to all spent fuel pools in making this finding, including the physical robustness of spent fuel pool design to contain spent fuel under a variety of normal, off-normal and hypothetical accident conditions (e.g., loss of offsite power, earthquakes, floods, tornadoes, etc.), the physical security measures and spent fuel pool mitigation measures already in place at all pools, and NRC site evaluations of every spent fuel pool in the United States. Therefore, the

NRC believes that the mitigation measures already in place at spent fuel pools are sufficient. No changes were made to the GEIS or Rule as a result of this comment.

(473-8-6)

D.2.36.16 – COMMENT: A commenter stated that the NRC should clarify a statement in the draft GEIS on page 4-85, lines 20-23 (Section 4.19.1, first paragraph) that "...emergency procedures and Severe Accident Mitigation Alternatives guidelines developed for reactor accidents provide a means for mitigating the potential consequences of terrorist attacks (73 FR 46204, August 8, 2008)." The commenter stated that reactors that are shut down often scale back their emergency procedures programs and obtain NRC exemptions from emergency procedure requirements. The commenter stated that it is not clear that these mitigating procedures apply to decommissioning reactors and the GEH Morris away-from-reactor wet storage facility.

RESPONSE: The NRC agrees in part and disagrees in part with the comment and does not believe that the GEIS is unclear. The emergency procedures referred to in the first paragraph of Section 4.19.1 of the GEIS are required by all reactor licensees, regardless of whether they have declared permanent cessation of operation. While the NRC has historically granted exemptions from some requirements in 10 CFR 50.47, "Emergency Plans," following permanent cessation of reactor operations, most of which were related to offsite emergency response capability, all operating and decommissioning reactor licensees with spent fuel in the spent fuel pool are required to continue to have onsite emergency response plans. Mitigating actions that would be available to licensees during reactor operations, such as portable pumps and fire-fighting equipment, will still be effective in mitigating loss-of-coolant accidents in the spent fuel pool after shutdown. The NRC agrees that the analysis in Section 4.19.1 does not explicitly address the GEH Morris wet storage facility, which is subject to the emergency plan requirements contained in 10 CFR 72. However, the applicable requirements in 10 CFR 72.32, "Emergency Plan," also require the development of emergency procedures that would mitigate the potential consequences of various types of events, including terrorist attacks. No changes were made to the GEIS or Rule as a result of this comment.

(841-7)

D.2.36.17 – COMMENT: One commenter stated that the cumulative frequency of successful attacks on ISFSIs could be substantial and that the consequences of a successful attack could be severe.

RESPONSE: The NRC disagrees with the comment. The NRC does not believe there is any meaningful way to consider the cumulative risks of terrorism as suggested by the comment, and cumulative effects of terrorist attacks were not considered in the GEIS. As stated in Section 6.1 of the GEIS, cumulative impacts result from the incremental impact of an action when added to

other past, present, and reasonably foreseeable future actions, regardless of what agency or person undertakes such other actions. While the NRC evaluated the consequences and probability of a single terrorist attack on a generic facility in the GEIS, there is no past or present terrorist event involving spent fuel or any other special nuclear material. Further, given that NRC cannot reasonably be expected to anticipate where or when an attacker might attempt to attack other spent fuel storage installations, there are no reasonably foreseeable future actions upon which to base a cumulative effects analysis. No changes were made to the GEIS or Rule as a result of this comment.

(897-7-3)

D.2.36.18 – COMMENT: A commenter stated that the GEIS failed to consider cybersecurity issues. The commenter suggested the NRC consider Joel Brenner's "America the Vulnerable," a book that the commenter stated describes vulnerabilities at nuclear power plants and the electric grid. The commenter also stated that the NRC should consider the history of the Davis-Besse Nuclear Power Plant, citing boric acid corrosion issues, the plant's role in a 2003 blackout event, and that Davis-Besse computer systems were once infected with the Slammer worm.

RESPONSE: The NRC agrees in part and disagrees in part with the comment. The NRC agrees that the GEIS did not explicitly address cybersecurity and has updated Section 4.19.1 to explain the applicable NRC requirements, which are also summarized below. However, the NRC does not believe that this clarification results in any changes to the impact conclusions in the GEIS.

As stated in Section 4.19.1 of the GEIS, the NRC improved security requirements for licensed facilities and has put in place increased security requirements including cybersecurity requirements at all NRC-licensed facilities since the terrorist attacks on September 11, 2001. Although these attacks did not have a cyber-component, the NRC included cybersecurity threat and vulnerability assessments in its review. To address these concerns, including concerns identified by the incidents at Davis-Besse Nuclear Power Plant (although the boric acid issue was not cyber-related) and the 2003 Northeast electrical blackout, the NRC issued a series of advisories and orders requiring nuclear power plants to take certain actions, including enhancing the protection of their computer systems. The NRC has since replaced those interim measures with regulations, including adding a cybersecurity threat component to the DBT in 2007. In 2009, the NRC issued cybersecurity requirements for licensees under 10 CFR Part 50, Section 73.54, "Protection of Digital Computer and Communication Systems and Networks." This requires licensees to provide a high assurance that digital computer and communication systems and networks are adequately protected against cyber-attacks, up to and including the DBT as described in 10 CFR 73.1, "Purpose and Scope."

For spent fuel stored in dry storage casks at ISFSIs, these storage casks do not use active safety systems that rely on computers, but instead rely on passive systems for cooling,

subcriticality, shielding, and confinement of the spent fuel (i.e., these safety functions do not rely on electrical power). Therefore, a cyber-attack on an ISFSI cannot have an effect on the safety of the spent fuel. No changes were made to the Rule as a result of this comment.

(341-2-15)

D.2.36.19 – COMMENT: Several commenters provided examples of high-energy weapons that terrorists might use in attacks on spent fuel storage facilities and that the NRC should have analyzed the impacts of these weapons in the GEIS. One commenter suggested that security improvements must be approved by a panel of experts independent of the nuclear industry and the NRC. Another commenter asked the NRC to consider a 1998 test at the Aberdeen Proving Ground, where a hole was punched in a dry cask. This commenter suggested that terrorists now have access to much more powerful weapons than that used in that test. Another commenter stated that a similar Sandia National Laboratory test was insufficient.

RESPONSE: The NRC disagrees with these comments. The NRC continuously evaluates domestic and international terrorist activities and information generated by the U.S. intelligence community on potential terrorist capabilities; and compares this information to the NRC's DBT for radiological sabotage and its associated adversary characteristics. The NRC also conducts an annual formal review to assess whether the current adversary characteristics require revision. If so, licensees are subject to these revised adversary characteristics under the DBT regulations or, if necessary, immediately effective security Orders. Furthermore, as discussed in Section D.2.36.20 of this appendix, the NRC does not consider expert independent panels to be necessary. Moreover, the determination of adversary characteristics is an essentially government function and thus, may not be performed by an independent panel.

With regard to ISFSIs, the NRC based the analysis in the GEIS on the NRC's assessment of the ability of high-energy devices to penetrate the massive and robust dry storage systems. While certain devices have the capability to penetrate a cask's confinement boundary, a breach in the boundary does not mean that there is an associated likelihood for a significant release of radioactivity to the environment. The NRC relied on a significant body of analytic and experiential spent fuel studies performed over the last 30 years.

Regarding spent fuel pools, NRC regulations require licensees to be able to mitigate the consequences of large fires and explosions. This includes response and mitigating equipment both onsite and offsite. Because of the small size and massive walls of spent fuel pools (which are designed to withstand a design basis seismic event), the airborne delivery of explosives into a spent fuel pool is not considered realistic and credible. While a ground assault upon a spent fuel pool is possible, the likelihood of creating a rapid draindown event is considered very low.

At reactors that have ceased operations, 10 CFR 50.47 applies, and licensees must continue to provide adequate emergency response. Licensees must also protect the spent fuel against the

DBT of radiological sabotage. Licensees also need to provide a strategy for addressing large fires and explosions in or around the spent fuel pool, regardless of ignition source. During operations, licensees need to maintain the ability to mitigate a radiological release from fuel within the spent fuel pool due to a security-initiated event. In addition, the NRC requires licensees to take steps to maximize spent fuel coolability during any potential security draindown event, which would provide sufficient time for mitigating actions to be taken before unacceptable fuel heating occurs. No changes were made to the GEIS or Rule as a result of these comments.

(250-46-6) (325-7-4) (447-1-22) (616-8) (618-14) (705-5) (709-8) (766-2) (916-2-18) (927-8)

D.2.36.20 – COMMENT: Commenters stated that security organizations are inadequate at NRC-licensed facilities. One commenter cited a recent example at the Y-12 facility in Oak Ridge, Tennessee, and Tennessee Valley Authority's experience with both staff-based and contractor-based security. Another commenter stated that security improvements must be approved by a panel of experts independent of the nuclear industry and the NRC.

RESPONSE: The NRC disagrees with the comments. As stated in Section 4.19.1 of the GEIS, the NRC improved requirements for security organizations and has implemented increased security requirements at all NRC-licensed facilities since the terrorist attacks of September 11, 2001. All licensed facilities including operating reactors, spent fuel pools, and ISFSIs improved their security organizations by increasing requirements for armed and trained security officers performing routine and random patrols; electronic alarm and surveillance systems with back-up monitoring; and physical security systems (e.g., fences, vehicle barriers, lighting, etc.) to protect against the threat of radiological sabotage, prevent the theft or diversion of special nuclear material or protect against the threat of loss of the facility and increased cybersecurity requirements. The enhanced baseline inspection program and other reviews referred to in Section 4.19.1 of the GEIS include rigorous inspections by the NRC onsite, regional, and headquarters staff to ensure they provide high assurance that activities involving spent fuel and HLW do not constitute an unreasonable risk to public health and safety. These robust inspections occur on a regular and routine basis and the results of these inspections are often made publicly available to support the NRC's principles of good regulation, specifically transparency in regulatory actions. Transparency allows the public not only to learn about violations but offers the additional assurance that the NRC has taken action to ensure violations are corrected. Because of the extensive interactions the NRC staff has with the intelligence community, the qualifications required of NRC inspectors who monitor implementation, and the NRC principles of good regulation, the NRC does not agree that an independent panel is needed to approve or review security or security organization improvements. No changes were made to the GEIS or Rule as a result of these comments.

(222-17) (250-20-5) (329-12-10) (723-10) (919-3-15) (919-3-19) (919-5-9)

D.2.36.21 – COMMENT: One commenter stated that the continued operation of nuclear power plants results in an increase in nuclear materials, which undermines all efforts to increase nuclear security and prevent proliferation.

RESPONSE: This comment is beyond the scope of the GEIS. The GEIS and Rule address continued storage of spent fuel and do not authorize the continued operation of nuclear power plants. Further, by focusing on the consequences of continuing to operate reactors, the comment did not address how the environmental impacts of continuing to store spent fuel during the continued storage timeframes would undermine all efforts to increase nuclear security and prevent proliferation. No changes were made to the GEIS or Rule as a result of this comment.

(531-2-17)

D.2.36.22 – COMMENT: Several commenters stated that the GEIS did not adequately address insider threats.

RESPONSE: The NRC disagrees with the comments. In the context of spent fuel storage facility safeguards, an insider is a knowledgeable person working inside the facility who assists, in a passive or active role, well-trained and dedicated attackers armed with hand-carried weapons and equipment. A knowledgeable insider is considered by licensees as part of the security measures described in Sections 4.19.1 and 4.19.2 of the GEIS and applicable to spent fuel pools and ISFSIs. No changes were made to the GEIS or Rule as a result of these comments.

(246-6-1) (823-25)

D.2.36.23 – COMMENT: One commenter asked the NRC why the storage of both military and commercial nuclear waste is not a government secret. This commenter believes that it is a matter of national security to put nuclear waste in a few inland caverns as soon as possible without public debate, and without informing the enemies of the United States.

RESPONSE: The NRC disagrees with these comments. After the terrorist attacks of September 11, 2001, the NRC took specific steps to ensure that facility information that was not already withheld and which would be useful to a potential adversary would no longer be available to the public. Guidance was provided to licensees in NRC Regulatory Issue Summary 2005-31 (NRC 2005a), which describes the types of information to be withheld from the public. In general, information clearly visible from locations accessible to the public near a site is generally released to the public. Moreover, in enacting the AEA, as amended, Congress did not require the classification of the “fact of” existence of an NRC license, nor of the general location of the licensed facility, (i.e., to support a robust process for the public to request a hearing pursuant to Section 189a of the AEA). No changes were made to the GEIS or Rule as a result of these comments.

(190-1) (190-5)

D.2.36.24 – COMMENT: One commenter stated that NRC should consider requiring licensees to place dry cask storage systems inside containment structures, instead of allowing licensees to decommission containment buildings.

RESPONSE: The NRC disagrees with the comment. As stated in Section 1.6.2.2 of the GEIS, imposing new regulatory requirements, such as requiring licensees to implement hardened at-reactor storage systems; reducing the density of spent fuel in pools; or expediting the transfer of spent fuel from pools to dry cask storage, is outside the scope of this proposed action. No changes were made to the GEIS or Rule as a result of this comment.

(325-31-6)

D.2.36.25 – COMMENT: A commenter, citing SECY-13-0112 (NRC 2013l), stated that it is inconsistent for the NRC to maintain two narratives about the threat of spent fuel pool fires. According to the commenter, one narrative states that the NRC must withhold security assessments from the public on the grounds that they contain "sensitive information that could be useful to an adversary." A second narrative states that the pools are safe and secure, and no further action is needed to reduce the risk of a pool fire.

RESPONSE: The NRC disagrees with the comment. The complete security assessment of spent fuel pools includes security scenarios, potential vulnerabilities, and security measures to eliminate or minimize any vulnerability. This complete narrative would be considered sensitive information and not releasable to the public because it contains information that could be potentially useful to an adversary. As stated in Section 4.19.1 of the GEIS, spent fuel pool structural features, complemented by the deployment of effective and visible security measures provide high assurance of protection of public health and safety. Therefore, the NRC believes that by allowing only the conclusions of security assessments to be publicly available, information that informs the public and acts as an additional deterrent to an adversary is made available. No changes were made to the GEIS or Rule as a result of this comment.

(916-2-19)

D.2.36.26 – COMMENT: One commenter stated that the GEIS should address potential attacks on "soft targets" such as electric utility lines or electric generators.

RESPONSE: The NRC disagrees with this comment. The risk posed to spent fuel stored in spent fuel pools from malevolent acts by individuals against supporting infrastructure (e.g., offsite electrical supplies) is bounded by a facility's design basis accident (i.e., safety) considerations, such as earthquakes and tornadoes. (It should be noted that sabotage or terrorism do not pose any unique considerations for this type of attack). In Section 4.19.1 of the GEIS, the NRC discussed licensee actions that would be expected to mitigate such events. These licensee actions to mitigate design basis accidents envelop the issue raised by the commenter. For spent fuel stored in dry storage casks at ISFSIs, these storage casks do not

use active systems, but instead rely on passive systems for cooling, subcriticality, shielding, and confinement of the spent fuel, and these passive safety functions do not rely upon electrical power. Therefore, an attack on electrical supply systems to an ISFSI will not have an effect on the safety or security of the spent fuel. No changes were made to the GEIS or Rule as a result of this comment.

(496-9) (823-27)

D.2.36.27 – COMMENT: One commenter stated that storage casks and pools are expensive to maintain due to the necessity to constantly guard them from terrorism.

RESPONSE: NRC agrees that licensees have a continuing obligation to maintain and secure spent fuel pools and dry cask storage systems. As stated in Section D.2.42.3 of this appendix, and as summarized in Section 2.1.2.2 of the GEIS, under 10 CFR 50.54(bb), licensees are required to "submit written notification to the Commission for its review and approval of the program by which the licensee intends to manage and provide funding for the management of all irradiated fuel at the reactor following permanent cessation of operation of the reactor until title to the irradiated fuel and possession of the fuel is transferred to the Secretary of Energy for its ultimate disposal in a repository." Similarly, the NRC acknowledges that, because of delays in the siting and licensing of a repository, the Federal government bears an increasing financial responsibility for spent fuel storage costs, and it may become responsible for paying all the costs associated with spent fuel storage at some time in the future. No changes were made to the GEIS or Rule as a result of these comments.

(205-11)

D.2.36.28 – COMMENT: A commenter indicated that the GEIS stated that the potential for theft and diversion of light water reactor spent fuel is not credible but the GEIS did not state whether or not the potential for theft and diversion of non-light water-reactor spent fuel is credible. The commenter indicated that "to be complete" the GEIS should characterize whether the potential for theft and diversion is not credible for both light water reactor spent fuel and non-light water reactor spent fuel, including during the long-term or indefinite storage periods, and Table 4-2 should be updated accordingly.

RESPONSE: The NRC agrees in part and disagrees in part with the comment. The NRC agrees that the GEIS should clearly state the environmental impacts of theft and diversion for both non-light water-reactor fuel and light water reactor fuel. However, the NRC disagrees that a specific finding regarding credibility of theft or diversion is necessary. As stated in the GEIS, there is a very low probability of successful theft or diversion of spent fuel from an ISFSI with the intent of using the contained special nuclear material for an improvised nuclear device, because of (1) the inherent protection afforded by the massive reinforced-concrete storage module and the steel storage canister; (2) the unattractive form of the contained special nuclear material, which would require major chemical and metallurgical processing steps before fabricating into

an improvised nuclear device; and (3) the immediate hazard posed by the high radiation levels of the spent fuel to persons not provided radiation protection. Therefore, to ensure consistent descriptions for LWR and non-LWR fuel, the finding on the credibility of theft and diversion of LWR fuel has been removed from the GEIS. To clarify that the NRC has weighed both the probability and consequences of this type of attack before reaching a conclusion that the impacts are SMALL, the NRC has added to Section 4.19.2 of the GEIS a description of the environmental consequences of theft of special nuclear material resulting in fabrication and use of an improvised nuclear device. Section 4.19.2 of the GEIS notes that additional security measures may be necessary in the future to ensure adequate protection of public health and safety and the common defense and security, and it is reasonable to assume that the NRC will implement such measures as necessary.

The determination in Table 4-2 that the environmental impacts of continued at-reactor storage due to sabotage or terrorism are SMALL for the short-term, long-term, and indefinite timeframes reflects the very low risk of a successful terrorist attack in light of the robust nature of dry cask storage and the security measures established by the NRC. This determination applies to both light water reactor spent fuel and non-light water reactor spent fuel. Therefore, the conclusion in Section 4.19.3 of GEIS that the environmental risk is SMALL for spent fuel stored in dry storage applies for both acts of radiological sabotage and theft or diversion of special nuclear material.

The text of Section 4.19.2 of the GEIS was revised as a result of this comment as described above. No changes were made to the Rule as a result of this comment.

(841-8)

D.2.36.29 – COMMENT: A commenter stated that the NRC should supplement NUREG–0575, *Final Generic Environmental Impact Statement on Handling and Storage of Spent Light Water Power Reactor Fuel*, because new circumstances and information relevant to security and terrorism consideration in NUREG–0575 have become available. The commenter cites *Marsh v. Oregon Natural Res. Council*, which holds that Federal agencies should supplement an EIS if significant new circumstances or information are relevant to environmental impacts of the proposed action. As new information, the commenter cited the lack of a date for a permanent waste repository, evidence that terrorism is a credible threat to spent fuel stored at nuclear reactors, the accident at Fukushima Dai-ichi, the greater possibility of more devastating earthquakes for sites in the upper Midwest and the Northeast, and the use of high-burnup fuel.

RESPONSE: The NRC disagrees with the comment. The Generic Environmental Impact Statement on Handling and Storage of Spent Light Water Power Reactor Fuel, NUREG–0575 (NRC 1979), examined long-range policy and alternatives for the handling and storage of spent fuel. NUREG–0575 supported the original 10 CFR Part 72, “Licensing Requirements for the Storage of Spent Fuel in an Independent Spent Fuel Storage Installation (ISFSI).” This environmental review supported a rulemaking that has already occurred. Supplementation of

an EIS is only required where the proposed action has not yet been completed. No changes were made to the GEIS or Rule as a result of this comment.

(473-7-3)

D.2.36.30 – COMMENT: A commenter stated that the NRC should consider including an analysis of the potential environmental impacts of terrorism in all of its NEPA reviews for ISFSI licenses, regardless of whether the licensed facility is in the Ninth Circuit.

RESPONSE: The NRC disagrees with the comment. The site-specific analyses for ISFSI license applications are outside the scope of this GEIS and Rule, which are limited to an assessment of the environmental impacts of continued storage. Because it is conducting a generic analysis of the environmental impacts of continued storage, the NRC has analyzed the environmental impacts of terrorism, which ensures that this analysis complies with the holding in *San Luis Obispo Mothers for Peace v. NRC* and is therefore valid in the Ninth Circuit. No changes were made to the GEIS or Rule as a result of this comment.

(619-2-2)

D.2.36.31 – COMMENT: One commenter stated that countries, such as Germany, have found far better ways of storing their nuclear waste and the GEIS needs to consider such options. The commenter stated that many aspects of spent fuel storage in the United States have been overlooked in existing studies, such as the effects of terrorist attacks or an exchange of nuclear weapons in a future war. The commenter believes that present storage methods provide plenty of opportunities for wide-scale dispersal of enormous quantities of radioactive elements into the atmosphere.

RESPONSE: The NRC disagrees with the comment. As stated in Section 1.6.2.2 of the GEIS, imposing new regulatory requirements, such as requiring licensees to implement hardened onsite storage systems, reduce the density of spent fuel in pools, or expedite the transfer of spent fuel from pools to dry cask storage, is outside the scope of this proposed action.

The environmental impacts of potential terrorist attacks were described in Sections 4.19 and 5.19 of the GEIS. These impacts are described in terms of the risk of successful attack, which takes into consideration both the probability and the consequences of such events. With respect to the potential for war, 10 CFR 50.13 states that licensees are not required to provide for design features or other measures for the specific purpose of protection against the effects of attacks and destructive acts, including sabotage, directed against the facility by an enemy of the United States, whether a foreign government or other person, or use or deployment of weapons incident to U.S. defense activities. No changes were made to the GEIS or Rule as a result of this comment.

(610-5)

D.2.37 Comments Concerning the Feasibility of Geologic Disposal

D.2.37.1 – COMMENT: The NRC received many comments on the technical feasibility of a geologic repository.

Several commenters supported the NRC's conclusion in the GEIS and Rule that a repository is technically feasible. A few of these commenters noted the Blue Ribbon Commission's support for a repository as the preferred approach for spent fuel disposal. Another commenter noted that since 1984 nothing has emerged that would lessen the NRC's confidence in the technical feasibility of a repository. In fact, this commenter noted more scientific and engineering experience and evidence has emerged to reinforce the technical feasibility of a repository. Other commenters noted that geologic repositories exist today, for example at the Waste Isolation Pilot Project in New Mexico. Several commenters provided detailed technical discussions and references to support the NRC's conclusion in the GEIS that a repository is technically feasible. Other commenters recommended that the NRC provide a more robust discussion of the technical feasibility of a repository, including references to the updated Yucca Mountain documents that the NRC will issue in the near future.

Many commenters expressed concern about the technical feasibility of deep geologic disposal. Several of these commenters argued that there is no safe or scientifically sound way to store spent fuel, and that no viable solution exists for spent fuel disposal. One commenter argued that there have been no technological breakthroughs that would reduce or modify the health risks posed by spent fuel. Other commenters noted that there are no geologic disposal facilities anywhere in the world, and questioned how the NRC could make a feasibility finding when no facilities exist. Commenters questioned whether a suitable site could be found, even if the technology existed to safely construct a repository. Other commenters expressed concern that the long-lived nature of these wastes, and the uncertainty inherent in predicting the behavior of geologic formations (e.g., changes caused by earthquakes) over long periods of time, would make it impossible to construct a geologic repository. One commenter noted that even if a geologic formation is scientifically verified as stable, the act of digging the repository will disturb the formation and there is nothing that can then be done to restore the stability of the formation. Another commenter argued that the NRC cannot stop human intervention into a repository, and a separate commenter noted that there is no way to tell future generations of the hazards at a future repository. Several commenters also argued that the Federal government's long history of failure at sites like Lyons, Kansas, and Yucca Mountain makes it difficult for the NRC to conclude that a repository is technically feasible. One commenter noted that the Federal government has considered many disposal methods, including deep geologic, seabed, and Antarctic disposal, none of which has resulted in a viable solution to the disposal problem.

One commenter argued that the NRC cannot rely on the Waste Isolation Pilot Plant site in New Mexico to support its conclusion of technical feasibility because the NRC repudiated the idea of a salt repository in the 2010 Waste Confidence proceeding (NRC 2010a). This commenter also

argued that Yucca Mountain cannot support the NRC's conclusion of technical feasibility in terms of the need to meet the radiation protection standards for Yucca Mountain in 40 CFR 197. Further, this commenter argued that the NRC's analysis of the environmental impacts of spent fuel disposal in Table S-3 is no longer valid and that an updated analysis of the environmental impacts of disposal is necessary to support the NRC's feasibility determination. The commenter also argued that the NRC's feasibility determination must also consider the cost of disposal, which is not analyzed in the GEIS.

Another commenter noted that problems with water infiltration at the Yucca Mountain site showed that water supplies would eventually become contaminated with radionuclides like plutonium.

RESPONSE: The NRC agrees in part and disagrees in part with the comments. The NRC agrees that the disposal of spent fuel in a geologic repository is technically feasible and has included in Appendix B of the GEIS the technical basis for this position. The policy of the United States, as set forth in the NWPA, is for disposal of spent fuel in a national repository, and decades of scientific studies support the use of a repository for disposal of spent fuel. Federal responsibility for siting and building a repository remains national policy.

The NRC acknowledges the difficulties that the United States has encountered over the years in siting and licensing a geologic repository, from the failed attempt to locate a repository in a salt mine in Lyons, Kansas, through the challenges with the proposed repository at Yucca Mountain. Although location of a repository at Lyons, Kansas, failed due to technical difficulties at that site, the technical difficulties encountered had site-specific aspects (i.e., presence and location of existing boreholes) that do not suggest salt as a geologic media is generally unacceptable for a repository. The Commission remains confident that a repository will be sited. The Commission does not believe that accumulated spent fuel will be stored permanently at reactor sites and does not endorse permanent storage at reactor sites.

The NRC has not identified any developments that would challenge the technical feasibility of deep geologic disposal as the ultimate resting place for spent fuel. Nothing in the recent Court of Appeals decision questioned the technical viability of this option. The NRC is aware, however, that there is political and societal uncertainty regarding the licensing of a disposal site. This uncertainty, along with the direction from the Court of Appeals, is one of the reasons the NRC included an analysis of the indefinite storage timeframe in the GEIS.

The impacts of continued storage of spent fuel are addressed in the GEIS. Specific impacts of final disposal of fuel would be addressed in a separate site-specific repository EIS. The safety and environmental impact of any site that is chosen as a repository would be reviewed during that licensing process. Any repository application must be approved by the NRC. The NRC review would address the safety and environmental aspects of disposal in a repository during the licensing review. As part of that licensing review, the NRC would address how the

repository meets applicable regulations. The NRC recognizes the comment's concerns about Table S-3. A more detailed discussion of this issue can be found in Section D.2.9.8 of this appendix.

With respect to the Yucca Mountain site, the NRC is in the process of completing its review of the application and will issue a safety evaluation report once that review is complete, therefore, the GEIS does not contain a reference to the safety evaluation report. As for contamination of the groundwater, DOE's license application for Yucca Mountain evaluates releases of radionuclides from the proposed repository.

Issues related to costs associated with disposal are addressed in Section D.2.42.5 of this appendix. No changes were made to the GEIS or Rule as a result of these comments.

(30-24-1) (30-5-5) (30-1-6) (45-7-4) (112-31-1) (112-26-2) (112-26-3) (112-26-4) (112-30-5) (112-34-6) (138-5) (138-7) (139-1) (163-13-3) (163-48-3) (163-35-5) (163-7-6) (187-1) (208-7) (244-13-6) (246-29-1) (246-6-3) (246-15-4) (246-6-4) (250-33-1) (250-35-3) (250-35-5) (250-50-5) (293-4) (310-2) (325-7-1) (326-44-3) (327-1-1) (327-7-3) (327-4-4) (328-9-2) (328-5-7) (329-15-4) (405-4) (417-8) (421-5) (473-12-15) (490-1) (491-1) (532-7) (537-1) (544-31) (552-1-3) (552-1-7) (562-5) (572-1) (611-26) (611-28) (662-9) (680-1) (686-17) (691-2) (691-7) (695-1) (700-1) (701-2) (714-1-11) (714-1-12) (714-1-13) (714-1-14) (714-1-15) (714-1-16) (714-1-19) (714-1-2) (738-1) (819-16) (827-5-8) (840-3) (844-5) (851-11) (859-2) (867-1-18) (897-2-16) (897-7-9) (898-1-10) (898-4-17) (898-4-19) (898-5-19) (898-5-20) (898-4-22) (898-4-23) (898-1-7) (898-4-9) (936-5)

D.2.37.2 – COMMENT: Several commenters noted that more than one repository will likely be needed to store currently generated and future spent fuel. Many of these commenters cited to the 70,000 ton limit for a repository in the NWPA and noted that a second or third repository will be needed. One commenter argued that the technical capacity at Yucca Mountain is much greater than the 70,000 ton limit in the NWPA.

Several commenters asserted that merely because "a repository" may be "technically feasible" does not mean that sufficient capacity will be available to accommodate all of the spent fuel that has been and will be generated, and they stated that the GEIS does not consider an upper limit to spent fuel. One commenter also asserted that the NRC must evaluate the likelihood that insufficient repository capacity will be available.

RESPONSE: The NRC agrees in part and disagrees in part with the comments. The NWPA (42 USC 10101) does include a statutory limit of 70,000 tons for the repository. However, this is a statutory limit; the NRC is not aware of any technical limitation of 70,000 tons for a repository. Technical limits on capacity would depend on the repository location (e.g., the DOE has considered the expansion of the proposed repository at Yucca Mountain). It is possible that more than one repository may be necessary to accommodate all of the spent fuel that has been

generated or may be generated in the future. No changes were made to the GEIS or Rule as a result of these comments.

(30-23-10) (30-17-6) (147-3) (222-11) (245-14-7) (250-29-6) (276-8) (326-63-4) (327-11-5) (328-4-4) (531-2-14) (544-6) (688-7) (693-1-4) (693-3-7) (706-4-21) (706-4-5) (851-3) (897-2-14) (897-2-15) (897-2-17) (898-4-10) (898-4-12) (898-4-13) (898-4-15) (898-4-16) (898-4-21) (898-1-23) (898-5-30) (919-3-2) (990-1)

D.2.37.3 – COMMENT: Several commenters expressed the view that the NRC should not assume that a repository will be sited and available, but should instead evaluate the impacts related to the probability that a repository would not be sited or would leak radiation, and the consequences if a repository is not sited. One commenter believes the NRC has excluded a major part of the uranium fuel cycle by not evaluating the environmental impacts of spent fuel disposal.

RESPONSE: The NRC agrees in part and disagrees in part with the comments. One of the scenarios addressed in the GEIS (the indefinite timeframe) assumes that no repository becomes available. The environmental impacts of this scenario are evaluated in the GEIS. The environmental impacts of disposal of the spent fuel from a reactor are documented in Table S-3. More information about Table S-3 can be found in Section D.2.9.8 of this appendix. Further, the impacts of operating a specific repository would be evaluated in the EIS that would be prepared as part of any licensing review for a repository. The national policy for disposal of spent fuel remains geologic disposal in a repository. No changes were made to the GEIS or Rule as a result of these comments.

(238-2) (327-39-3) (329-28-6) (556-3-8) (611-10) (611-11) (687-7) (707-2)

D.2.37.4 – COMMENT: Several commenters raised concerns regarding the NRC's failure to reach a permanent disposal solution and stated that the NRC must acknowledge these failures and its lack of confidence in reaching a disposal solution. A few commenters stated that the NRC has used the Waste Confidence Rule for decades to avoid difficult questions about the dangers of spent fuel storage and the lack of a disposal solution. Two commenters also stated that the Commission must be sure to not endorse indefinite onsite storage. One commenter stated that the NRC cannot arbitrarily and capriciously pretend that there is a disposal solution when in fact there is no solution.

RESPONSE: The NRC agrees in part and disagrees in part with the comments. The NRC does not create national policy for disposal of spent fuel and has not attempted to do so in this GEIS and Rule. That responsibility lies exclusively with Congress and the President. The Commission does not endorse long-term or indefinite storage of spent fuel at the reactor site. The Commission continues to support timely disposal of spent fuel, but recognizes that storage

of spent fuel may continue safely until a repository becomes available, in accordance with NRC regulations.

The Commission acknowledges the difficulties that the United States has encountered over the years in the selection and licensing of a repository. While it is taking longer than first envisioned to develop a repository for the disposal of spent fuel, the Commission remains confident that a repository is feasible and the Commission believes that it is reasonable to predict that a repository will be sited and constructed in the short-term timeframe. The GEIS and Rule do acknowledge the uncertainty inherent in this prediction and consider two other timeframes, including one where a repository never becomes available. No changes were made to the GEIS or Rule as a result of these comments.

(143-1) (163-34-2) (246-4-3) (246-29-5) (276-4) (325-3-2) (327-11-4) (328-4-3) (335-1) (336-2) (357-1) (443-6) (446-1) (637-2) (652-5) (834-1)

D.2.37.5 – COMMENT: A few commenters stated that the NRC had failed to fulfill its obligations to ensure safe storage or disposal of spent fuel or is at risk of such failure. One commenter stated that the NRC's research staff appears to disregard the need for safe storage. Another commenter stated that the NRC has disregarded its responsibility as an "Independent Safety Authority in Chief" by failing to adhere to the national policy of deep geologic disposal. Another commenter warned that the NRC should not, by way of the GEIS or Rule, foster indefinite storage or "passively" establish a national policy of storage, which is contrary to the national policy of deep geologic disposal.

RESPONSE: The NRC disagrees with the comments. The NRC does not create national policy for disposal of spent fuel and has not attempted to do so in the GEIS and Rule. That responsibility lies exclusively with Congress and the President. The Commission does not endorse long-term or indefinite storage of spent fuel at any reactor site. The Commission continues to support timely disposal of spent fuel, but recognizes that storage of spent fuel may safely continue until a repository becomes available. The NRC continues to adhere to its obligations under the NWPA consistent with funding provided by Congress, Court direction, and United States national policy regarding geologic disposal.

The regulatory research program sponsored by the NRC is designed to improve the agency's knowledge where uncertainty exists, where safety margins are not well-characterized, and where regulatory decisions need to be confirmed in existing or new designs and technologies. The NRC reviews ongoing industry and international research and existing agency efforts to identify activities that are likely to provide data necessary to address identified technical needs. Emergent technical issues identified include the corrosion of stainless-steel casks, concrete degradation, and the need for improved cladding and dry cask temperature profiles. The NRC has developed research plans for concrete degradation and temperature profiles during extended storage timeframes. The NRC will use the results to support the basis for any

additional inspection requirements or proposed mitigation actions. NRC research is developing the technical basis to ensure the continued safe performance of long-term dry storage systems for spent fuel and high-level radioactive waste under extended service conditions and the structural integrity of spent fuel transport casks during severe accidents. No changes were made to the GEIS or Rule as a result of these comments.

(446-3) (532-5) (637-5)

D.2.37.6 – COMMENT: The NRC received many comments on the political and societal obstacles to siting a repository. Many commenters expressed concern that these political and societal issues would prevent the licensing of a repository. Several commenters expressed frustration over the closing of the Yucca Mountain facility due to politically motivated delays. Other commenters stated that the only thing blocking the United States from finding a repository is the political willpower to move ahead. Some commenters questioned whether a consent-based approach could be effective when no community wants a repository in its backyard. Similarly, some commenters expressed concern that it will be difficult to find a community that has the infrastructure, real estate, knowledgeable workforce, and educated citizens that would be needed for a consent-based approach to work. Another commenter indicated that for the United States to move forward, communities must trust the integrity of political and regulatory systems. Commenters also asserted that the Federal government has failed to follow the NWPA. One commenter asserted that this failure calls into question the ability of future host communities to have confidence in the government's ability to honor and implement a repository program. Other commenters stated that misinformation and politics have hindered a long-term solution and that the government has been ignoring this difficult issue. One commenter stated that the predominant problem is one of public relations.

Some commenters argued that the Commission should acknowledge that while it has confidence in the technical feasibility of deep repository disposal, there exist little or no grounds for confidence in the social and political process. Other commenters stated that the obstacles to any state, like Nevada, accepting a geologic repository will never disappear unless Congress passes legislation forcing a state to accept a permanent repository. And other commenters argued that the regulatory planning must account for the overwhelming uncertainty over political developments. Some commenters expressed concern that the GEIS and Rule do not consider whether sufficient societal and political support exist to support the Commission's expected repository availability timeframes. Several commenters noted that DOE is responsible for siting, constructing, and filling a repository. Many commenters asserted that the Federal government, and DOE in particular, has failed to meet its responsibility to dispose of spent fuel and that therefore there is no reason to believe the government will follow the law in the future.

One commenter cited a history of attempts to solve the nuclear waste problem that have failed due to political and technical issues. This history, the commenter asserted, demonstrates that there can be no basis for finding reasonable assurance that there will be sufficient mined

geologic repository capacity at any time. The efforts cited by the commenter include the following: the Lyons, Kansas repository, spent fuel reprocessing, commercial breeder reactors, ERDA/DOE promises to accept waste at away-from-reactor storage facilities, the Interagency Review Group process, the NWPA, and the Yucca Mountain repository. Further, the commenter expressed the belief that the process for developing a repository has been and continues to be rigged or substantially weakened to ensure that a proposed site would be licensable. Specifically the commenter suggests that DOE inappropriately narrowed the site-selection guidelines to predetermine the outcome, that Congress has reduced the statutory safety standards to reduce the cost of evaluating multiple sites, and that EPA has failed for nearly 30 years to produce radiation standards for a repository that satisfy the EPA's responsibility to adequately protect public health and the environment.

One commenter noted that NRC lacks the authority to make findings about the political activities that may affect spent fuel disposal in the future and that DOE might be better positioned to do so, but has been stopped due to political direction. Several commenters requested that the NRC give more consideration to these issues in the GEIS.

RESPONSE: The NRC acknowledges the difficulties that the United States has encountered over the years, from the failed attempt to locate a repository in a salt mine in Lyons, Kansas, through the opposition to a repository at Yucca Mountain. The Commission acknowledges the difficulties associated with licensing a disposal site. It will not be easy for the Federal government to meet the challenge of achieving political and social acceptance for the repository program. It will be difficult to overcome past problems and the perceived breach of trust between the government and the public. While it acknowledges these potential problems, the Commission has confidence that they can be resolved by applying the lessons learned in the Yucca Mountain program and in the different methodologies for achieving acceptance used in international programs.

Actions of the EPA and the DOE site-selection process do not fall under the NRC's authority under the AEA (42 USC 2011) and are beyond the scope of the GEIS and Rule. No changes were made to the GEIS or Rule as a result of these comments.

(30-1-3) (30-1-5) (45-1-5) (45-5-5) (63-10) (64-4) (112-10-3) (112-17-3) (119-3) (150-2) (163-35-1) (163-38-1) (163-8-1) (163-4-3) (163-21-4) (189-7) (191-2) (222-14) (222-21) (244-2-2) (244-1-3) (244-4-4) (244-9-4) (244-12-6) (245-20-4) (245-8-4) (245-20-5) (245-29-5) (246-25-2) (246-10-4) (246-10-6) (246-9-6) (250-63-3) (250-25-4) (250-56-4) (250-58-6) (253-4) (262-11) (275-5) (313-2) (315-1) (319-5) (325-4-2) (325-13-5) (325-17-5) (325-33-7) (326-1-1) (326-11-1) (326-27-2) (326-41-2) (326-49-2) (326-17-3) (326-53-3) (326-60-5) (327-36-2) (328-5-10) (328-5-13) (328-5-2) (328-5-3) (328-1-6) (329-19-1) (341-1-2) (350-2) (372-2) (377-2-18) (383-3) (384-2) (385-2) (386-2) (388-3) (391-2) (408-2) (421-2) (422-2) (431-4) (447-2-14) (447-2-7) (457-1) (457-2) (480-1) (490-2) (502-1) (505-1) (532-16) (532-18) (532-8) (532-9) (537-2) (544-32) (546-1) (548-4) (556-1-2) (557-2) (558-3) (568-1) (574-2) (598-5) (610-4) (619-1-12) (628-5) (644-1)

(644-2) (682-3) (683-3) (689-4) (689-6) (690-1) (706-4-15) (706-4-16) (706-4-17) (706-4-18) (706-4-19) (706-4-20) (753-3) (766-1) (766-3) (786-3) (812-2) (820-4) (823-79) (859-1) (863-4) (863-8) (867-1-14) (881-5) (885-2) (886-2) (909-2) (911-2) (913-4) (919-2-17) (933-2) (949-2) (949-4) (949-7) (967-1) (996-1)

D.2.37.7 – COMMENT: The NRC received many comments on the estimated timeframes for a repository to become available. Several commenters indicated that they did not believe that it was feasible to site, characterize, construct, license, and open a repository in 25 to 30 years as posited in the GEIS and Rule. Commenters questioned whether a repository will be available in the next 60 years, given what they described as the scientific, political, and technical problems associated with opening a repository. Other commenters challenged the NRC's statements that a repository will be available when needed, and argued that there is no scientific or technical basis for assuming a repository will be up and running at any time in the next few decades. One commenter stated that the NRC needs to complete a technical or licensing review to support its assumption that a repository like Yucca Mountain will become available. Other commenters argued that without Yucca Mountain it would be difficult to meet the repository availability timelines discussed in the GEIS.

Many commenters stated that the Federal government's inability to site a repository in the last 60 years provides little support for the idea that a repository can be available along the timelines considered in the GEIS or even when one is necessary. Commenters expressed concern that the government and industry have been unable to develop a solution to the nuclear waste problem despite decades of trying, which indicates that a solution will not be found. A few commenters opined that once a facility is available, it will take several decades to ship the spent fuel to the facility. Other commenters expressed concern that the NRC's continued expansion of the timeframe for a repository to become available, from 25 years in 1984 to "when necessary" or indefinite storage in the GEIS, casts doubt on the timeframes for repository availability in the GEIS. One commenter challenged the NRC's reliance on the term "feasible," and noted that a conclusion that something is feasible, like a repository becoming available in 60 years, is not the same thing as being confident that it will happen.

Other commenters argued that it is feasible to have a mined geologic repository available within 60 years after the licensed operating life of a nuclear power plant because there are no technical or financial barriers that would prevent the Federal government from meeting this schedule.

RESPONSE: The NRC agrees in part and disagrees in part with the comments. The NRC agrees with the comments that it is feasible to have a mined geologic repository available within 60 years after the licensed operating life of a nuclear power plant and that, once a repository is open for use, it will take several decades to ship all of the spent fuel to the repository. The NRC otherwise disagrees with the comments. The timelines and analysis in the GEIS are based on the NRC's conclusion that a safe disposal facility is technically feasible and that spent fuel can

be safely stored until a repository is available, as discussed in Section B.2.2 of Appendix B of the GEIS. In Appendix B of the GEIS, the NRC reviewed international experience with siting a repository, domestic experience with the Waste Isolation Pilot Plant and Yucca Mountain, the report from the Blue Ribbon Commission on America's Nuclear Future (BRC 2012) and DOE's response to the report (DOE 2013a), and the NRC's past predictions of repository availability. Once the process for selecting a repository location begins, the NRC believes that it is possible to site, characterize, construct, license, and open a repository in 25 to 35 years, even with the social and political issues associated with siting a repository. The NRC recognizes the uncertainty inherent in these predictions, and has therefore, at the direction of the Court of Appeals, prepared an analysis of the environmental impacts of continued storage if a repository never becomes available.

Although the United States national program for geological disposal for spent fuel is uncertain, the Commission remains confident that a repository is feasible, a repository location can be selected, and the repository can be constructed. The Commission believes that the decades of experience of safely storing spent fuel with minimal environmental impact demonstrates that potential future delays in repository capacity (i.e., beyond the short-term timeframe) will not result in significant safety or environmental issues associated with spent fuel storage. For the reasons noted in Section D.2.1.1, the Commission has decided not to include a timeframe for a repository in the Rule. No changes were made to the GEIS or Rule as a result of these comments.

(30-1-2) (30-17-5) (45-5-1) (45-2-2) (45-11-3) (50-1) (112-26-1) (145-3) (205-12) (205-4) (244-12-2) (245-42-1) (245-7-2) (245-24-3) (250-23-3) (250-45-3) (252-1) (325-34-1) (326-4-1) (326-8-1) (327-25-3) (327-2-4) (344-1) (348-1) (352-1) (358-3) (373-1) (544-17) (620-3) (625-1) (693-3-6) (713-1) (713-3) (715-3) (719-2) (723-2) (729-1) (738-8) (823-16) (823-56) (823-72) (867-2-1) (867-1-16) (867-1-19)

D.2.37.8 – COMMENT: One commenter discussed Adaptive Phased Management. The commenter noted that Adaptive Phased Management is both a technical method and a management system, with an emphasis on adaptability, which could be used for a spent fuel management plan in selecting a repository.

RESPONSE: Use of Adaptive Phased Management is beyond the scope of the rulemaking and GEIS. The NRC is not responsible for repository site selection. The NRC notes that its regulations for a geologic repository do provide for phased development and licensing decisions (e.g., construction authorization, license to receive and possess HLW, amendment for permanent closure, and decommissioning and dismantlement of surface facilities). No changes were made to the GEIS or Rule as a result of this comment.

(820-16)

D.2.37.9 – COMMENT: A few commenters stated that a repository or a "waste dump" should not be sited in particular areas. One commenter stated that nuclear waste should not be left in the state of Illinois. Another commenter expressed concern about the possibility of a disposal site in the North Carolina Mountains.

RESPONSE: Specific locations for a repository are beyond the scope of the GEIS and Rule. The NRC is not responsible for the selection of a repository location. DOE is the Federal agency responsible for repository site selection. In addition to considering the environmental impacts of continued storage, this GEIS and Rule consider only whether a repository is technically feasible. The analysis in these documents does not consider specific repository sites. Although any specific site considered for repository siting and development may not ultimately be selected because of safety, environmental, or other concerns, the NRC expects that many sites can be found in a variety of geologic formations that are acceptable. No changes were made to the GEIS or Rule as a result of these comments.

(161-1) (245-37-1) (250-64-4) (562-10) (882-3)

D.2.37.10 – COMMENT: The NRC received many comments regarding international programs and the feasibility of geologic disposal. Many of these commenters noted the international consensus that geologic disposal is the appropriate disposition path for spent fuel. Some commenters noted that the President's Blue Ribbon Commission on America's Nuclear Future recognized geologic disposal as the preferred method of disposal; others noted that studies by the National Academies of Science and the IAEA support the feasibility of deep geologic disposal. The commenters pointed to international efforts to construct repositories as support for the analysis in the GEIS that geologic disposal is technically feasible. Specifically, some of these commenters noted the progress toward repository construction in other countries, like Finland, Sweden, the United Kingdom, Japan, Russia, Germany, and France. Other commenters noted that the United States has many sites that are suitable for geologic disposal. Other commenters looked to the state of international repository development to raise questions about the adequacy of the NRC's conclusions in the GEIS. For example, two commenters noted that the site in Finland is experiencing problems, as documented in the film Into Eternity. One commenter stated that three of the "latest publications" for the Finnish company Posiva were not available on the Posiva website and that the GEIS was based on specious claims based on unsupported assumptions. Another commenter questioned whether the relative size of a repository in the United States would create additional issues, including site selection, that would not be problems in smaller countries like Finland and Sweden.

Several commenters suggested that the GEIS be updated to consider the progress that is expected to occur in the next few years in countries like Sweden and Finland. Further, the commenters also recommended that the NRC consider future repository designs that are likely to be developed in the next 5 to 10 years.

Many commenters acknowledged the technical feasibility of deep geologic disposal, but questioned the United States' ability to overcome the unique political and societal obstacles that now impede the development of a repository, and which might not be a problem in other countries.

Finally, a few commenters objected to the development of a LLW repository near Lake Huron in Canada.

RESPONSE: The NRC agrees in part and disagrees in part with the comments. The NRC has determined that progress in development of repositories internationally provides useful experience in building confidence that the most likely scenario is that a repository can and will be developed in the United States in the short-term timeframe. The NRC's discussion of the programs of other countries was included to show that those countries have considered various methodologies for securing social and political acceptance of a repository. The experiences in Finland and Sweden, for example, show that a focus on gaining public support can lead to continued progress in the development of a repository. The NRC did not purport to provide a complete history of all foreign repository programs. The NRC examined a number of international programs to inform the conclusion in the GEIS that a repository is likely to become available by the end of the short-term timeframe. The NRC recognizes the uncertainty inherent in these conclusions, and has therefore, at the direction of the Court of Appeals, prepared an analysis of the environmental impacts of continued storage if a repository never becomes available. A more detailed discussion of the international repository programs can be found in Appendix B of the GEIS. Appendix B has been updated to reflect the current status of programs in the referenced countries and expanded to reflect the progress in additional countries.

As noted in the comments, an international consensus has developed that geologic disposal of spent fuel is feasible and can be conducted safely, and the NRC concurs with that conclusion.

It is also true that other countries' experience with their repository programs does not directly correlate to whether a repository will ultimately be available in the United States. These international programs simply provide additional data for the NRC to consider in developing its views regarding repository availability in the GEIS. Political and societal obstacles do not affect the technical feasibility of a repository, but they will shape the process for selection of an actual repository location in the United States. Recognizing that siting a repository has taken longer than originally envisioned, the GEIS postulates three possible timeframes for completion of a repository. The NRC believes that a repository will open within the short-term timeframe of 60 years for the reasons explained in the GEIS, but has included a second, longer timeframe as well as the scenario that a repository will never be sited and built to account for all possibilities. Inasmuch as the GEIS analyzes this third "no-repository" scenario, the conclusions of the GEIS about the environmental impacts of long-term spent fuel storage do not depend on the experience of other nations in siting and building repositories.

With respect to the comments regarding other factors that may influence site selection, the size of a repository has not been shown to be an issue for site selection. As noted in the comments, countries like Finland and Sweden are planning repositories that are smaller than that planned for the United States; however, some countries have been evaluating the benefits of developing multinational disposal options (e.g., a host country repository contains its own waste and waste from other participating countries [IAEA 2005]).

The selection of a repository site in the United States and the design of the repository are the responsibility of the DOE. The NRC's role is to review any license application. The NRC is not involved in site selection or design, except to the extent that NRC regulations in 10 CFR Parts 60 and 63 provide performance objectives and technical requirements for HLW disposal. Note that the requirements in 10 CFR Part 60 would need to be updated to reflect EPA standards and the evolution in the capability of performance assessment methods and computer codes for compliance demonstration, as well as in the development of methods to quantify and propagate uncertainty. Experience with these techniques has altered the technical assumptions and estimated behavior of post-closure repository performance that formed the basis for the existing Part 60 criteria. See SECY-97-300, "Proposed Strategy for Development of Regulations Governing Disposal of High-Level Radioactive Wastes in a Proposed Repository at Yucca Mountain, Nevada" (NRC 1997b).

The publications described as unavailable in the comment about the Posiva website are not referenced in Appendix B and the NRC did not rely on them. The document referenced by the NRC is available on the website.

The NRC has no involvement in the development of a LLW repository in Canada and any concerns about the siting of that repository are beyond the scope of the GEIS and Rule. No changes were made to the Rule as a result of these comments.

(30-6-10) (30-23-8) (45-15-1) (45-7-1) (45-5-2) (45-7-2) (45-7-3) (112-25-1) (163-47-2) (163-11-4) (181-3) (183-3) (222-4) (244-12-3) (250-37-3) (250-58-3) (250-70-4) (327-8-3) (328-5-4) (328-5-5) (421-3) (461-2) (541-3) (549-2) (601-2) (685-9) (686-14) (898-4-20) (916-3-17) (986-1)

D.2.37.11 – COMMENT: One commenter stated that the NRC is attempting to decide how to address spent fuel transportation, storage, and disposal issues in isolation, which is contrary to the Blue Ribbon Commission on America's Nuclear Future's recommendation that a new single-purpose organization be developed and be tasked with developing an integrated program to address these issues.

RESPONSE: The NRC disagrees with the comment. The NRC does not create national policy for disposal of spent fuel and has not attempted to do so in the GEIS and Rule. That responsibility lies exclusively with Congress and the President.

The GEIS and Rule address the impacts of continued storage of spent fuel for the period after the end of a reactor's licensed life of operation until disposal in a repository, as well as transportation impacts to a potential away-from-reactor storage facility. This information is used to comply with the requirements of NEPA for licensing and relicensing of reactors and ISFSIs. The GEIS and Rule do not address transport of spent fuel to a disposal facility, disposal of spent fuel in a repository, or impose requirements on how spent fuel should be stored. Nothing in the GEIS or Rule would interfere with any of the recommendations by the Blue Ribbon Commission on America's Nuclear Future. No changes were made to the GEIS or Rule as a result of this comment.

(325-3-3)

D.2.37.12 – COMMENT: The NRC received many comments regarding commenters' concern that a repository does not yet exist, the need for solutions to the spent fuel disposal problem, and potential solutions to the spent fuel disposal problem. Several commenters encouraged the NRC and the Federal government to make finding a permanent solution a national priority. Many commenters argued that it is this generation's responsibility to deal with the spent fuel disposal problem and that the problem should not be passed along to future generations.

Other commenters acknowledged the difficulty inherent in dealing with the spent fuel disposal problem and with siting a repository, but most did not suggest solutions. A few commenters cited the findings and recommendations of the Blue Ribbon Commission on America's Nuclear Future in support of these comments.

Many commenters expressed concern about the ongoing storage of spent fuel at recently closed and operating nuclear power plants. These commenters questioned whether a disposal solution would be available or whether the spent fuel would need to be stored indefinitely at existing and former reactor sites. Several of these commenters noted that removal and disposal of spent fuel was the plan when these reactors were initially licensed, not storing it onsite indefinitely. A few of these commenters also stated that the NRC and the nuclear industry have violated an underlying "contract" between the NRC, the nuclear industry, and the communities surrounding reactor sites that, following decommissioning, all waste would be removed and these sites would be available for other purposes. A few commenters also expressed concern regarding the length of time needed to transport spent fuel to a repository once one becomes available. These commenters noted that it could take decades to move all the spent fuel from any given reactor site. A few commenters expressed concern that any temporary solution, such as continued storage, would become permanent.

A few commenters suggested that the spent fuel should be stored at the reactor sites indefinitely. Several commenters disagreed and argued in favor of siting and opening a deep geologic repository, at a site like Yucca Mountain, as soon as possible. Many of these commenters recommended not licensing or renewing licenses for any reactors until a repository

is available for the spent fuel already generated. One commenter noted that any repository should allow for the safe retrieval of spent fuel after disposal. One commenter suggested that the spent fuel be wrapped in gold or iridium.

Several commenters argued that there is no solution to the spent fuel disposal problem and expressed concern that the Federal government and the industry have attempted for decades to find a solution and have not yet found a solution. One commenter stated that the Court of Appeals verified that no permanent, safe storage solution is likely to be found.

RESPONSE: The NRC agrees in part and disagrees in part with the comments. The Commission acknowledges the need for permanent disposal of spent fuel, and for the generations that benefit from nuclear energy to bear the responsibility for providing an ultimate disposal solution for the resulting waste. The Commission continues to support timely disposal of spent fuel, but recognizes that, as documented in the GEIS, storage of spent fuel may safely continue at reactor sites and at away-from-reactor sites until a repository becomes available. The NRC does not create national policy for disposal of spent fuel. That responsibility lies exclusively with Congress and the President. The national policy is to eventually dispose of spent fuel in a geologic repository. In January 2012, the Blue Ribbon Commission on America's Nuclear Future reaffirmed the need for, and feasibility of, a geologic repository (BRC 2012). Selection of a particular location for the development of a repository is the responsibility of the DOE. The NRC is an independent regulatory agency tasked with ensuring that the repository meets the NRC's regulations for protection of public health and safety and the environment by meeting all licensing requirements imposed by the NRC and environmental protection standards mandated by the EPA.

The lack of a repository does not require that the operating reactors be shut down or new licenses not be issued. The NRC has licensing requirements and regulations in place to ensure that spent fuel remains safely stored in spent fuel storage facilities until a repository becomes available. Specific requirements related to disposal are beyond the scope of the GEIS and Rule. No changes were made to the GEIS or Rule as a result of these comments.

(6-1) (6-3) (26-1) (28-1) (29-1) (30-4-1) (30-4-7) (35-5) (39-1) (45-8-2) (59-15) (64-3) (86-4) (112-5-1) (126-1) (133-2) (136-10) (136-7) (153-3) (162-2) (163-28-1) (163-41-1) (163-21-2) (163-23-2) (163-41-2) (163-1-6) (163-48-7) (176-2) (177-1) (204-2) (205-17) (208-9) (217-1) (219-10) (220-2) (226-2) (237-2) (245-22-2) (245-43-2) (245-2-3) (245-9-3) (245-6-6) (245-19-9) (246-13-1) (246-25-1) (246-26-1) (246-16-2) (246-26-2) (246-16-4) (246-29-4) (246-9-5) (246-18-6) (247-1) (249-12) (250-38-1) (250-2-2) (250-43-2) (250-5-2) (250-57-4) (250-22-5) (250-66-5) (250-20-6) (250-30-6) (252-4) (254-2) (256-1) (280-10) (287-1) (302-2) (319-1) (325-1-1) (325-1-2) (325-26-2) (325-9-2) (325-7-3) (325-1-4) (325-17-4) (325-7-7) (326-9-2) (326-63-3) (326-33-4) (326-37-4) (327-9-1) (327-7-2) (327-25-4) (327-42-6) (328-5-12) (328-14-2) (328-2-3) (328-12-4) (328-1-8) (329-14-4) (329-4-6) (332-2) (333-3) (336-3) (339-2) (340-1) (342-1) (368-2) (381-2) (402-2) (403-1) (416-2) (416-4) (431-13) (431-15) (431-3) (436-2) (437-2) (447-

2-17) (447-2-2) (447-1-7) (450-3) (454-8) (477-4) (481-3) (486-1) (488-2) (514-5) (515-1) (515-5) (522-1) (529-1) (531-1-12) (531-2-12) (534-3) (538-2) (540-2) (540-8) (548-9) (552-1-12) (555-5) (560-2) (566-1) (566-6) (569-1) (583-2) (594-1) (605-2) (609-6) (612-3) (613-1) (618-2) (619-1-1) (619-1-11) (619-1-6) (625-3) (628-1) (633-2) (635-2) (636-5) (640-9) (642-5) (648-5) (650-1) (652-3) (660-5) (660-6) (664-1) (665-5) (688-6) (690-7) (693-3-5) (704-3) (706-4-6) (708-5) (713-5) (714-1-17) (716-7) (718-2-3) (728-3) (728-4) (733-2) (734-2) (738-2) (741-1) (742-1) (743-1) (757-11) (757-12) (757-9) (758-1) (761-1) (770-2) (771-1) (774-5) (774-6) (781-1) (783-1-1) (788-2) (789-1) (790-1) (792-3) (793-3) (797-1) (807-1) (814-1) (836-53) (854-1) (855-3) (860-5) (860-6) (861-2) (863-1) (871-1) (882-1) (883-1) (913-1) (913-3) (924-4) (944-3) (944-9) (946-4) (978-1) (992-1) (998-3)

D.2.37.13 – COMMENT: One commenter provided a bibliography of publications from the EPRI that the commenter believed would provide information and analysis related to the GEIS and requested that the NRC review the publications for potential use in preparing the final GEIS. The subjects of these reports include the geologic disposal of used fuel and HLW, repository programs in other countries, repository site selection, Yucca Mountain, dual-purpose canisters, performance assessment, and disposal standards.

RESPONSE: The NRC acknowledges the references suggested by the comments. The NRC has considered these references and updated the GEIS as appropriate. No changes were made to the Rule as a result of these comments.

(379-13) (379-14) (379-15) (379-16)

D.2.37.14 – COMMENT: Commenters discussed the NRC's obligation to assess the likelihood of geologic repository availability. Several commenters challenged the NRC's conclusion that a repository is likely to become available within 60 years of the end of a reactor's licensed life for operation. Two commenters argued that the NRC's and the DOE's defiance of the NWPA is the reason repository availability became so uncertain that the Court of Appeals, in *New York v. NRC*, found that NEPA requires analysis of the environmental impacts of a repository never becoming available. One commenter requested that the NRC include a discussion of *In re Aiken County*, in the GEIS's discussion of the case history. Some commenters cited *NRDC v. NRC*, for the proposition that the AEA does not require the NRC to cease reactor licensing until definitive findings on repository safety are reached.

RESPONSE: The NRC agrees in part and disagrees in part with the comments. The NRC recognizes that there is some uncertainty regarding the NRC's assessment that a repository is likely to become available within 60 years of the end of a reactor's licensed life for operation. The NRC is aware of this uncertainty, and has prepared additional analyses in the GEIS to evaluate the environmental impacts should it become necessary to continue storage after the end of the short-term timeframe. These timeframes contemplate an additional 100 years of storage before a repository becomes available (long-term timeframe) or indefinite storage

should a repository never become available (indefinite timeframe). The NRC recognizes the comment's concerns regarding the NWPA and the Yucca Mountain proceeding, but notes that the 2010 Waste Confidence Update assumed, for the purposes of the analysis that supported the Rule, that the repository at Yucca Mountain would never become available (75 FR 81032).

The NRC recognizes and is following the direction from the Court of Appeals in *Aiken County* to continue with the Yucca Mountain licensing process. *Aiken County* concerned the agency's legal obligations regarding review of the DOE's Yucca Mountain construction authorization application under the NWPA. In particular, the Court of Appeals issued a writ of mandamus and directed the NRC to "promptly continue with the legally mandated licensing process" for the Yucca Mountain application, "unless and until Congress authoritatively says otherwise or there are no appropriated funds remaining." See DOE (High-Level Waste Repository), CLI-13-08, 78 NRC __ (2013)(slip. op. at 4)(quoting *In re Aiken County*) (NRC 2013s). As this discussion demonstrates, *Aiken County* is not in the direct line of cases that lead to the development of the GEIS and Rule. However, the NRC has updated Appendix B of the GEIS, Technical Feasibility of Continued Storage and Repository Availability, to include a discussion of *In re Aiken County*.

The NRC agrees with the comments that the AEA does not require the NRC to cease reactor licensing pending the resolution of repository safety issues. In this case, however, the Commission directed the NRC not to make final licensing decisions because the required NEPA analyses would not be complete. The analysis in the GEIS provides a generic assessment of the environmental impacts of continued storage, which will allow the NRC to satisfy its NEPA obligations for these actions with respect to continued storage.

No changes were made to the GEIS or Rule as a result of these comments.

(30-16-4) (163-38-2) (210-1) (210-2) (544-22) (544-3) (544-4) (544-7) (692-7) (827-1-11)

D.2.38 Comments Concerning the Feasibility of Safe Storage and Regulatory Framework

D.2.38.1 – COMMENT: Many commenters expressed opposition to spent fuel storage and concern that spent fuel cannot be stored safely. Commenters noted that casks and spent fuel pools were not designed for permanent storage as no one envisioned the need to store spent fuel onsite for decades. Commenters expressed concern with the "dismal" record of the DOE and the NRC on spent fuel. In support of this position, commenters stated that (1) spent fuel cannot be stored safely as everything leaks eventually, (2) pools are overcrowded, (3) no viable methods are available for long-term storage, (4) spent fuel is flammable, (5) spent fuel remains radioactive for hundreds of thousands of years, (6) a possible formation of a critical mass could melt through the container, and (7) storage is a toxic accident waiting to happen. Commenters expressed concern that a huge release could occur due to a breakdown in the storage system that would result in catastrophic consequences. Commenters stated that even with the remote

possibility that an accident could occur, we should not risk continued storage. Commenters stated that multiple acts of nature can combine in unforeseeable ways to create fires and uncontrolled releases into the atmosphere and aquatic systems. Commenters pointed to Fukushima Dai-ichi as evidence for why it is not safe to store spent fuel onsite. Commenters stated that the NRC cannot rely on unproven or nonexistent technology for safe storage for thousands of years. Commenters also indicated that because the spent fuel cannot be stored safely the industry should stop producing it.

Commenters indicated that spent fuel should be stored inside a structure that is as robust as the reactor-containment building and that it should not be stored in high seismic zones, densely populated areas, tsunami zones, or on the coast. Commenters stated that nuclear waste has already contaminated nuclear plant sites and affected surrounding areas.

One commenter noted that there is a big difference between a deep geologic repository and a nuclear waste operation, which should be described in the GEIS. The commenter noted that nuclear waste operations are not as safe as a repository due to possible terrorist attacks.

RESPONSE: The NRC agrees in part and disagrees in part with these comments. The NRC agrees that spent fuel pools and dry storage casks are not designed for permanent storage. The GEIS assumes that all spent fuel is removed from the pool by the end of the short-term timeframe (60 years) and placed in casks. The GEIS also assumes that the dry storage casks are replaced every 100 years. However, as discussed in Appendix B of the GEIS, the NRC believes that spent fuel is, and will continue to be, stored safely in both dry casks and spent fuel pools. Appendix B of the GEIS supports the conclusion that it is feasible to safely store spent fuel in pools during the short-term timeframe and in dry casks for the short-term, long-term, and indefinite timeframes. Technology used to store spent fuel exists and has been proven. Spent fuel has been stored safely for decades using both spent fuel pools and dry storage casks. Technical understanding and experience continues to support the technical feasibility of safe storage of spent fuel in spent fuel pools and in dry casks, based on the physical integrity of pools and casks over long periods (e.g., slow degradation of spent fuel during storage in spent fuel pools and dry casks; and engineered features of storage pools and dry casks to safely withstand accidents caused by either natural or man-made phenomena). In addition, enhanced regulations, safety designs, and operations continue to evolve over time (e.g., security and safety enhancements made after the September 11, 2001 terrorist attacks and the March 2011 Fukushima Dai-ichi disaster; and corrective actions to address spent fuel pool leaks). The NRC acknowledges that the potential consequences of some accidents could be serious; however, the risk is low because of the very low likelihood of such accidents. Potential accidents are addressed in Sections 4.18 and Appendix F of the GEIS. The environmental impact of accidents and security-related events are addressed in Sections 4.18 and 4.19 of the GEIS and the impact is SMALL for the short-term, long-term, and indefinite timeframes. For information

on man-made and natural phenomena hazards and the probability of accidents see Sections D.2.35.1 and D.2.35.27 of this appendix.

The NRC has regulations in place that address the construction and operation of both wet and dry storage. The NRC uses these regulations to determine that the fuel will remain safe under anticipated operating and accident conditions. These regulations include requirements on topics such as radiation shielding, heat removal, and criticality. In addition, the NRC reviews fuel storage designs for protection against the following phenomena:

- naturally occurring events (e.g., seismic events, tornadoes, and flooding)
- dynamic effects (e.g., flying debris or drops from fuel handling equipment and drops of fuel storage and handling equipment)
- hazards to the storage site from nearby activities.

NRC-required spent fuel management activities focus on maintaining the integrity of the spent fuel so that radioactive components do not escape.

NRC inspectors are responsible for verifying that spent fuel pools and related operations are consistent with a plant's license. The NRC also performs specialized inspections to verify that new spent fuel cooling capabilities and operating practices are being implemented properly. The NRC performs inspections before and during loading of dry casks to ensure the correct fuel goes into the right storage systems. The NRC also inspects loaded casks every few years.

The NRC takes safety seriously, including how nuclear waste is handled and stored. The NRC has decades of experience in licensing, regulating, and inspecting spent fuel storage facilities. Through the licensing and inspections processes, the NRC keeps its regulations up-to-date to ensure that storage and handling of nuclear waste continues to be managed safely and without significant impacts to the environment.

The GEIS analyzes the environmental impacts of continued storage using reasonably foreseeable assumptions regarding the practices and storage. As explained in Section 1.6.2.2 of the GEIS, the GEIS does not propose or impose safety requirements for the storage of spent fuel, such as expediting the transfer of spent fuel from pools to casks or into hardened dry storage.

As for contamination at nuclear plant sites, leaks from spent fuel pools are addressed in Appendix E of the GEIS. The GEIS analyses the environmental impacts of continued storage, including the generation of LLW during continued storage. Contamination that might occur during operation of the nuclear power reactor would be addressed during operation or during decommissioning of the facility and is beyond the scope of the GEIS and Rule.

As for the comment related to nuclear waste operations, the commenter is correct that onsite storage of spent fuel is not the same as disposal in a repository. The GEIS does not equate the two, nor does the GEIS analyze the impacts of disposal in a geologic repository. Nevertheless, any NRC-licensed facility, be it a repository or a storage facility, must comply with the NRC's regulations, which provide reasonable assurance of adequate protection of public health and safety. The environmental impacts of security-related events are addressed in Section 4.19 of the GEIS and the impact is determined to be SMALL for the short-term, long-term, and indefinite timeframes.

The issue of generation and storage of spent fuel during the licensed life of a reactor, and refueling are beyond the scope of the GEIS and Rule. No changes were made to the GEIS or Rule as a result of these comments.

(8-1) (30-13-2) (45-1-1) (45-12-3) (45-11-4) (50-2) (50-4) (57-1) (63-5) (64-8) (76-3) (92-3) (110-1) (112-31-9) (117-1) (120-1) (121-2) (125-3) (155-1) (163-26-1) (163-7-10) (163-32-2) (202-4) (205-16) (205-3) (245-32-1) (245-38-2) (245-42-2) (245-37-3) (245-24-4) (245-37-4) (250-40-1) (277-2) (280-5) (282-3) (288-3) (291-2) (297-1) (325-33-2) (326-54-3) (326-45-4) (327-26-1) (328-1-4) (328-9-4) (329-28-2) (329-9-2) (329-4-3) (331-1) (333-1) (334-3) (336-1) (358-2) (359-1) (361-2) (362-2) (377-4-16) (380-5) (381-5) (409-1) (427-1) (443-7) (450-5) (474-1) (479-1) (483-2) (488-1) (491-4) (492-3) (493-1) (508-1) (509-1) (512-3) (517-2) (519-1) (541-6) (541-7) (567-1) (571-1) (593-1) (602-1) (618-7) (620-2) (627-1) (628-4) (630-1) (633-1) (636-2) (645-1) (654-1) (655-1) (659-1) (660-3) (664-3) (667-1) (668-4) (681-2) (681-4) (687-3) (693-1-5) (704-6) (723-4) (732-2) (755-4) (765-1) (773-2) (774-3) (786-1) (800-1) (822-2) (831-1) (831-2) (836-48) (836-68) (838-9) (898-1-11) (929-1) (929-5) (930-2-22) (937-29) (999-1) (1004-6) (1007-1)

D.2.38.2 – COMMENT: Many commenters stated that the spent fuel is being stored safely and can continue to be stored in a safe and environmentally sound manner for a long period of time, while the political process continues to work on a disposal solution. Commenters stated that the American nuclear industry is well regulated and that as long as the onsite storage continues under an NRC license with NRC monitoring and inspection, spent fuel can be stored safely onsite until a repository is available. The commenters stated that industry experience shows that the spent fuel is being stored safely and that industry has shown it is committed to the safe and secure storage of spent fuel and able to responsibly manage onsite fuel storage for as long as necessary. Commenters indicated that spent fuel is currently being stored onsite in well-designed, well-protected facilities and storage casks. Commenters stated that the safety and security measures taken to maintain the spent fuel pools are unprecedented measures that include a combination of strategic design and construction, use of multiple safety systems, ongoing surveillance and inspection, defense-in-depth, and state-of-the-art security measures. Commenters stated that safety is the highest priority for utilities. Commenters noted that facilities have spent billions of dollars and thousands of staff-hours in improving facilities and structures and that the industry has taken measures to enhance safety as a result of the

September 11, 2001 terrorist attacks and the Fukushima Dai-ichi seismic event. Commenters noted that there has never been a single incident where spent fuel had been compromised by any outside individual or group. Commenters noted that the Mineral, Virginia earthquake showed the robustness and integrity and excellence in design of the systems that were deployed at North Anna Nuclear Generating Station. Commenters also noted that the Fukushima Dai-ichi earthquake and tsunami did not result in damage to the spent fuel being stored in casks and in the spent fuel pools and that the event further demonstrated the robustness and relative passivity of spent fuel storage. Commenters noted that storage continues to evolve and improve over time as we learn through scientific investigations. Commenters encouraged the NRC to continue to work with industry to promote innovations that will improve or enhance safety. Several commenters suggested adding additional information on the regulatory framework and lessons-learned from the Fukushima Dai-ichi event. Several commenters provided site-specific examples of how spent fuel is safely stored onsite. One commenter noted that France successfully reprocesses nuclear fuel.

RESPONSE: The NRC acknowledges the comments that support the GEIS and agrees with the comments that spent fuel is being stored safely in both spent fuel pools and dry casks. The NRC will continue its regulatory control and oversight of spent fuel storage. Decades of operating experience and ongoing NRC inspections demonstrate that reactor and ISFSI licensees continue to meet their obligation to safely store spent fuel in accordance with the requirements of 10 CFR Parts 50, 52, and 72.

Reprocessing is beyond the scope of the GEIS and Rule.

No changes were made to the GEIS or Rule as a result of these comments. However, additional examples of how the regulatory framework operates and additional information on safe storage were added to Appendix B of the GEIS as a result of other comments.

(30-6-11) (30-20-2) (30-6-2) (30-9-2) (30-18-3) (30-19-3) (30-6-3) (30-16-6) (30-23-6) (30-23-7) (45-2-8) (60-2) (61-3) (112-21-1) (112-4-1) (112-12-2) (112-21-2) (112-25-2) (112-27-2) (112-17-4) (112-21-5) (112-25-7) (119-1) (122-2) (123-1) (138-1) (138-2) (138-4) (152-2) (153-2) (163-4-1) (163-6-2) (163-11-3) (163-18-3) (163-29-4) (163-29-5) (163-29-9) (178-1) (179-2) (180-1) (180-5) (181-2) (183-2) (201-3) (212-3) (213-3) (244-1-1) (244-11-11) (244-7-3) (244-9-3) (244-11-4) (244-1-6) (244-11-7) (245-12-1) (245-20-1) (245-26-1) (245-34-1) (245-40-1) (245-12-2) (245-16-2) (245-2-2) (245-23-2) (245-28-2) (245-33-2) (245-4-2) (245-34-3) (245-20-6) (245-12-7) (246-8-1) (246-14-2) (246-19-2) (246-1-3) (246-10-3) (246-20-3) (246-18-4) (246-19-4) (246-19-5) (250-13-1) (250-35-1) (250-36-1) (250-4-1) (250-10-2) (250-13-2) (250-19-2) (250-25-2) (250-27-2) (250-3-2) (250-35-2) (250-37-2) (250-41-2) (250-56-2) (250-32-3) (250-57-3) (250-6-3) (250-70-3) (250-18-4) (250-58-4) (250-25-5) (250-6-5) (250-15-6) (275-2) (278-2) (307-2) (307-4) (308-2) (313-1) (325-14-1) (325-18-1) (325-16-2) (325-5-3) (325-14-4) (325-16-6) (326-3-1) (326-32-1) (326-49-1) (326-16-2) (326-17-2) (326-25-2) (326-11-3) (326-18-3) (327-12-2) (327-31-5) (328-8-2) (328-10-3) (350-1) (372-1) (382-3) (383-2) (384-1) (385-1) (386-1)

(388-2) (391-1) (398-2) (399-2) (400-2) (408-1) (448-1) (466-2) (538-1) (548-10) (549-3) (557-1) (574-1) (592-1) (601-3) (637-12) (642-3) (674-4) (675-1) (682-2) (683-2) (694-3-13) (694-2-23) (694-2-26) (694-2-28) (694-1-6) (694-1-7) (697-1-7) (697-2-8) (745-3) (753-2) (808-1) (812-1) (827-2-3) (827-3-8) (863-3) (864-10) (885-1) (886-1) (909-1) (911-1) (942-8) (949-1) (949-3) (949-5) (949-6)

D.2.38.3 – COMMENT: One commenter suggested that the GEIS include specific information on aging management. The commenter suggested that the GEIS include information on how the aging management program will provide for monitoring the integrity of dry storage system components and the potential emissions specific to dry storage systems during the 100-year storage timeframe.

RESPONSE: The NRC agrees that an aging management program is an important component of the NRC's regulatory oversight of spent fuel storage. Applicants for specific licenses (10 CFR 72.42, Issuance of license) and CoC renewals (10 CFR 72.240, Conditions for spent fuel storage cask renewal) are required to describe a program for the management of issues associated with aging that could adversely affect structures, systems, and components important to safety; structures, systems, and components that are necessary to fulfill a function that is important to safety; or support the function of a structure, system, or component that is important to safety. The NRC conducts a review of the aging management activities described in these applications. The NRC will only approve of the renewal application if the program is adequate to provide reasonable assurance that aging effects would be managed during the period of extended operation.

All ISFSI sites are required to meet the dose limits in 10 CFR 72.104, Criteria for radioactive materials in effluents and direct radiation from an ISFSI or MRS. Appropriate radiation monitoring and the aging management program requirements will be reflected in the terms, conditions, and technical specifications of the renewed CoC and thus made applicable to the general licensee per 10 CFR 72.212(b). For specific licenses, radiation monitoring and aging management program requirements will be reflected in the terms and conditions of the renewed specific license. The NRC will monitor the general or specific licensee's compliance with the terms and conditions of their license through the NRC's inspection program. Guidance on aging management programs is available in Chapter 3 of NUREG–1927, Standard Review Plan for Renewal of Spent Fuel Dry Cask Storage System License and Certificates of Compliance (NRC 2011g).

Additional information on the aging management program has been added to Appendix B of the GEIS. No changes were made to the Rule as a result of this comment.

(915-10)

D.2.38.4 – COMMENT: Several commenters expressed the view that all spent fuel should be stored in dry casks. Commenters noted that dry storage does not require electricity as the casks are passively cooled by natural air flow, is less vulnerable to natural disaster and sabotage, and is a safer interim solution than storage in spent fuel pools. A couple of commenters indicated that the dry storage casks at Fukushima survived the earthquake. One commenter asked about the type of casks used at Fukushima and the distance the casks were from the damaged reactors. One commenter described the process for loading a cask and provided some information on the number of ISFSIs in the United States. One commenter stated that dry casks can be produced in the United States, creating jobs and increasing safety at an affordable cost. The commenter suggested that, if necessary, the government could assist the utilities by providing half the cost of the cask, but the utility should cover the cost because they have an obligation to decommission the reactors.

RESPONSE: The NRC agrees in part with the comments and disagrees in part. The NRC agrees that the casks at Fukushima survived the earthquake. See Sections D.2.52.1 and D.2.52.4 of this appendix for more information related to Fukushima. The NRC disagrees that spent fuel cannot be stored safely in spent fuel pools. As discussed in Appendix B of the GEIS, spent fuel has been stored safely and continues to be stored safely in both spent fuel pools and dry casks. Technical understanding and experience continues to support the technical feasibility of safe storage of spent fuel in spent fuel pools and in dry casks, based on the physical integrity of pools and casks over long periods (e.g., slow degradation of spent fuel during storage in spent fuel pools and dry casks and engineered features of storage pools and dry casks to safely withstand accidents caused by either natural or man-made phenomena). Appendix B of the GEIS supports the conclusion that it is feasible to safely store spent fuel in spent fuel pools during the short-term timeframe and in dry casks for the short-term, long-term, and indefinite timeframes. The NRC acknowledges that the potential consequences of some accidents could be serious; however, the risk is low because of the very low likelihood of such accidents. Potential accidents are addressed in Sections 4.18 and Appendix F of the GEIS. The environmental impact of accidents and security-related events are addressed in Sections 4.18 and 4.19 of the GEIS and the impact is SMALL for the short-term, long-term, and indefinite timeframes. For information on pool fires, man-made and natural phenomena hazards, and the probability of accidents see Sections D.2.35.1, D.2.35.27, and D.2.39.2 of this appendix.

The GEIS analyzes the reasonably foreseeable environmental impacts of continued storage, using reasonable assumptions regarding the practices and storage technology that will be used. As explained in Section 1.6.2.2, the GEIS does not propose or impose safety requirements for the storage of spent fuel (e.g., expediting the transfer of spent fuel from pools to casks).

Information on the number ISFSIs and casks currently being used in the United States is provided in the GEIS. Information on the casks used at Fukushima is beyond the scope of the GEIS and Rule. The creation of jobs is also beyond the scope of the GEIS and Rule.

Regarding costs of storage, utilities are responsible for the cost of storage, including the cost of purchasing dry casks. However, in response to high public interest about costs, the NRC has included some cost information regarding continued storage in Chapter 2 of the GEIS. No changes were made to the Rule or GEIS as a result of these comments.

(112-30-2) (116-3) (163-6-1) (326-4-4) (326-35-5) (473-8-7) (484-5) (556-5-3) (671-1) (778-3) (929-15) (929-7)

D.2.38.5 – COMMENT: Several commenters expressed concern about spent fuel storage in dry storage casks.

Commenters stated that casks need to withstand terrorism, tornadoes, floods, airplane crashes, underwater submersion, and severe earthquakes. To support their belief that spent fuel cannot be stored safely in dry storage casks for hundreds of years, commenters provided examples of past issues with casks (e.g., fabrication, cracking, corrosion, welds, seals, loading and unloading, leaking, clogged air flow vents, equipment failure, concrete storage pads, location of storage pads, hydrogen ignition incidents, a failed dry cask test, and quality control and assurance) that they believe indicate that spent fuel cannot be stored safely in dry storage casks for hundreds of years. One commenter stated that NRC had allowed manufacturers to build casks before issuance of the CoC, and another commenter stated that the NRC has exempted defective casks in the past. Commenters questioned how the NRC can have confidence in safe dry storage forever given the many documented issues and data gaps associated with cask storage. Several commenters expressed concern about storage of high-burnup fuel in dry casks due to the limited experience with this fuel.

A few commenters noted the maximum cask life (alternatively described as 300 years, 50 years, or 20 years) is not sufficient for indefinite storage. Commenters asked how the NRC will assure that the casks are replaced after their lifetime or earlier if the cask leaks and who would pay for any replacement. Commenters stated that there is no proof that spent fuel can be safely removed from casks or transported in the future as no cask has ever been unloaded.

However, other commenters stated that casks can withstand environmental disasters as evidenced by Fukushima. Commenters noted that casks have been used safely for decades and systems have become more robust over time. Commenters noted that dry cask storage systems will continue to evolve in the future with enhancements that will improve safety. Commenters provided some examples of improvements that have been made to the casks, including higher capacity casks that reduce handling activities. Some commenters encouraged the NRC to make dry cask storage safer.

One commenter was concerned that the NRC's cask certification process occurs too quickly and locks out public involvement. The commenter stated that the process has been taken over by the industry and that the lack of rigorous oversight has resulted in a lack of cask design field

testing. Commenters noted that the casks are not approved for geologic disposal and requested information on when final geologic disposal casks would be available.

Commenters encouraged the NRC to comprehensively evaluate and validate the sufficiency of the design life of storage systems.

One commenter submitted a paper for a method to take advantage of the heat that comes off the dry storage casks.

RESPONSE: The NRC agrees in part and disagrees in part with the comments. The NRC agrees with the comments that casks have been used safely for decades and that the designs continue to evolve. The NRC disagrees with the comments that indicate spent fuel cannot be stored safely in dry casks. Appendix B of the GEIS analyzes the feasibility of safe storage of spent fuel in casks. The analysis describes proven storage methodologies, practical operating experience, and the regulatory oversight provided by the current regulatory framework, allowing the NRC to determine that spent fuel can continue to be stored safely in the short-term timeframe with only routine maintenance and in the long-term and indefinite timeframes with cask replacement every 100 years.

The NRC assures safety by requiring multiple layers of protection against radiation releases. The storage casks provide an important barrier and the fuel cladding provides another layer of protection. The design requirements imposed by regulation ensure that the casks will maintain shielding, confinement, and subcriticality during normal and off-normal conditions of storage, postulated accidents, and natural events. The NRC reviews each application for a cask CoC to determine whether the storage cask design meets the requirements at 10 CFR Part 72. As part of this review, the NRC performs confirmatory analysis to verify the information in the application. The CoC application and amendment review processes are thorough, and the information submitted by the applicants, the NRC questions (e.g., requests for additional information and requests for supplementary information), and the applicant responses are available for public review during the processes (with some information redacted for security or proprietary reasons). As part of the review, the NRC evaluates the applicant's QA program to ensure it meets the requirements in 10 CFR Part 72.

Storage cask performance is evaluated against a range of normal and off-normal conditions, accidents, and external events. For normal conditions of storage, the casks are evaluated for maximum high and minimum low ambient temperatures and must simultaneously include the effects of solar insolation. In addition, the NRC evaluates the operational environment that a cask will experience when it is being loaded, prepared for storage, and transferred to the storage pad. The evaluations for off-normal conditions include variations in temperatures beyond normal, failure of 10 percent of the fuel rods combined with off-normal temperatures, failure of one of the confinement boundaries, partial blockage of air vents, out-of-tolerance equipment performance, equipment failure, and instrumentation failure or faulty calibration. The

applicant is required to evaluate the storage cask for a cask drop and tipover, fire, fuel rod rupture, and air flow blockage (for vented storage casks). In addition to accident conditions, the following natural phenomena are evaluated: flood, tornado, earthquake, burial under debris, lightning strike, and other phenomena (e.g., seiches, tsunamis, and hurricanes), as appropriate, depending on the storage cask location. The Commission has determined that evaluation of terrorist strikes and large plane impacts, on the other hand, are beyond-design-basis events that do not need to be evaluated by an applicant for a license or CoC. The test (at Aberdeen Proving Ground) referenced in the comments, discusses perforation of a cask by an armor piercing missile, which is also a beyond-design-basis event analogous to a terrorist strike.

Once the NRC review is completed, the cask design is approved by rulemaking, which provides the public an opportunity to comment. The NRC review process is similar for site-specific ISFSI license applications and amendments under 10 CFR Part 72, but licensing ISFSIs includes the opportunity for the public to request a hearing.

The NRC performs regular inspections at the cask fabrication facilities for CoCs, at both specifically and generally licensed ISFSI sites. The NRC also performs regular inspections of CoCs and license holders' QA programs.

With respect to the comment on early fabrication of casks and exemptions, the NRC does allow early fabrication and exemption requests. According to NRC regulations at 10 CFR 72.234(c), "[a]n applicant for a CoC may begin fabrication of spent fuel storage casks before the Commission issues a CoC for the cask; however, applicants who begin fabrication of casks without a CoC do so at their own risk. A cask fabricated before the CoC is issued shall be made to conform to the issued CoC before being placed in service or before spent fuel is loaded." If a storage cask does not meet the design approved by the NRC, then the CoC holder must either repair the non-conforming part, perform an evaluation under 10 CFR 72.48 to determine whether the CoC holder can deviate from the CoC without prior NRC approval, or obtain approval by the NRC to use the non-conforming part. Exemption applications submitted under 10 CFR 72.7 are reviewed by the NRC to ensure that they are authorized by law and will not endanger life or property or the common defense and security and are otherwise in the public interest. The NRC completes both a safety review and an environmental review before approving any exemptions.

The NRC follows up on potential safety issues with casks through the inspection program or, in some cases, through the allegation process. When concerns or issues are substantiated, the NRC takes appropriate follow-up actions for those with a resulting safety or regulatory concern. The NRC has previously addressed, or is addressing, the various concerns raised in the comments, many of which were identified by the NRC. For example, the NRC identified the potential for chloride-induced stress-corrosion cracking of austenitic stainless steel in Information Notice 2012-20 (NRC 2012l).

The NRC requires its licensees to implement monitoring and surveillance programs and licensees must take the necessary actions to ensure that the necessary integrity of required systems and components is maintained (see 10 CFR 72.44(c)). Surveillance programs include periodic inspections of storage cask vents to ensure that debris does not block the vents.

While it is true that no storage cask has been unloaded at an ISFSI, casks have been unloaded at national laboratories. Applicants provide unloading procedures as part of the CoC application or site-specific application and the NRC reviews the procedures as part of its review.

With respect to the comments on transportation, some storage casks have been certified for both storage and transportation. Spent fuel has been safely transported for over 30 years with no incidents or releases of radiation.

With respect to storage term, existing casks are certified for either 20 or 40 years, and can be renewed. One of the issues examined for renewals is storage of high-burnup fuel. 10 CFR Part 72 contains both cladding integrity and retrievability requirements. For CoC renewal applicants, the NRC would consider any degradation mechanisms associated with the fuel pellet itself or the cladding that could challenge the cladding integrity and retrievability of fuel from storage. Hydride reorientation that may occur in high-burnup fuel during storage, which could embrittle the cladding at lower long-term temperatures, is predominately a transportation issue. Under renewed CoCs, licensees are required to manage any effects associated with this degradation if it could adversely affect structures, systems, and components important to safety. The NRC believes sufficient data are available to project that high-burnup fuel can be safely stored and retrieved. Licensees must include aging management programs in their renewal applications to manage issues associated with aging that could adversely affect structures, systems, and components important to safety (including corrosion). Licensees must also include time-limited aging analyses that demonstrate that structures, systems, and components important to safety will continue to perform their intended functions for the requested period of extended operation. For more information on high-burnup fuel, see Appendix I of the GEIS and Section D.2.38.19 of this appendix.

The NRC has an extended storage program evaluating extended cask storage for durations up to 300 years. Ongoing research into the extended storage of spent fuel is part of the NRC's effort to continuously evaluate and update its safety regulations. As noted in Appendix B, the NRC is not aware of any deficiencies in its current regulations that would challenge the determination that continued safe storage of spent fuel in dry casks is feasible.

The environmental impacts of geologic disposal are out-of-scope for this proceeding. Any geologic disposal casks would be evaluated and approved prior to the operation of a geologic disposal facility.

Recommended uses of the heat emitted from dry casks are also outside the scope of the Rule and GEIS. No changes were made to the GEIS or Rule as a result of these comments.

(3-3) (50-3) (63-7) (100-1) (163-14-3) (205-6) (230-12) (245-24-1) (245-13-6) (246-17-4) (249-8) (249-9) (262-2) (279-2) (280-7) (326-63-6) (327-13-2) (327-8-2) (328-8-3) (328-14-4) (328-14-5) (328-14-7) (329-20-3) (377-4-12) (377-4-15) (377-5-2) (377-5-5) (419-15) (552-3-3) (640-6) (698-3) (698-4) (698-5) (819-12) (883-4) (901-2) (910-11) (919-1-16) (919-5-16) (919-1-17) (919-1-8) (928-1) (929-10) (929-12) (929-13) (929-14) (929-19) (929-20) (929-4)

D.2.38.6 – COMMENT: Many commenters expressed concern over storage of spent fuel in pools. Commenters stated that the spent fuel pools were not intended for long-term storage of spent fuel over periods as long as decades. Rather, storage was intended only to last until the spent fuel had cooled for removal from the pool, and that it is irresponsible to allow continued pool storage. Commenters stated that the quantity of spent fuel stored in the pools exceeds the original design basis by up to 9 times and that the pools can contain up to 40 times more nuclear material than reactor cores; almost 80 percent of all spent fuel is still in the pools. Commenters stated that the pools are not protected by redundant emergency makeup and cooling systems and they lack robust containment structures. Commenters stated that overcrowding of spent fuel pools is a problem, which increases the potential for a radioactive release that could put the surrounding communities and the nation at risk of a potential catastrophic accident or terrorist event that could result in land contamination. Commenters stated that spent fuel pools are vulnerable to power outages, earthquakes, meltdowns, and terrorist attacks, which can lead to leaks and area contamination. Commenters stated that NRC cannot dismiss pool accidents as improbable or of low probability. Commenters indicated that while the dry casks at Fukushima survived, the spent fuel pools are collapsing, and thus the Fukushima event should be instructive to the United States and prompt removal of spent fuel from pools.

Commenters expressed support for transferring spent fuel to dry cask as a national priority. Several commenters cited NUREG–1738 (NRC 2001b), *Technical Study of Spent Fuel Pool Accident Risk at Decommissioning Nuclear Power Plants*, to support the view that dry cask storage of spent fuel is safer than pool storage.

Commenters stated that (1) reactors should not be allowed to generate additional spent fuel until all existing spent fuel has been removed from the pools, (2) facilities that have been shut down should be required to transfer all spent fuel to casks before gaining access to decommissioning funds, and (3) the NRC should require that any refueling event result in a net transfer of spent fuel to cask storage.

Some commenters indicated that pool storage is safe and pools have safely contained spent fuel for over 30 years, which is equivalent to over 3,000 years of operating experience with no significant environmental impact.

RESPONSE: The NRC acknowledges the concerns about spent fuel storage in pools and agrees that this topic requires careful consideration. However, the NRC disagrees that spent fuel cannot be stored safely in pools. Spent fuel has been safely stored in spent fuel pools for many decades. As noted in Appendix B of the GEIS, technical understanding and experience continues to support the technical feasibility of safe storage of spent fuel in pools, based on their physical integrity over long periods of time (e.g., slow degradation of spent fuel during storage in pools; and engineered features of storage pools to safely withstand accidents caused by either natural or man-made phenomena). In addition, enhanced regulations, safety designs, and operations have continued to evolve as concerns and information have developed over time (e.g., security and safety enhancements made after the September 11, 2001 terrorist attacks and the March 2011 Fukushima Dai-ichi disaster, and corrective actions to address leaks in spent fuel pools). As pointed out in the comment, NUREG–1738 (NRC 2001b) states that the potential consequences of a pool accident could be serious; however, the risk is low because of the very low likelihood of such an accident. Spent fuel pool accidents are addressed in Section 4.18 and Appendix F of the GEIS. The environmental impact of accidents and security-related events are addressed in Sections 4.18 and 4.19 of the GEIS and the impacts are SMALL for the short-term timeframe after which the NRC assumes that the spent fuel will be transferred to an ISFSI or sent to a repository for disposal. As indicated in Section B.3.1 of the GEIS, the NRC is not aware of any information that would cause it to question the low risk of a spent fuel pool accident. For information on man-made and natural phenomena hazards and the probability of accidents see Sections D.2.35.1 and D.2.35.27 of this appendix.

The NRC acknowledges that the pools were not intended for long-term or indefinite storage of spent fuel, which is one of the reasons why the NRC assumes that the spent fuel will be removed from the pools by the end of the short-term timeframe. In accordance with the license-termination requirements for power reactors in 10 CFR 50.82(a)(3) and 52.110(c), decommissioning of the power plant, including the spent fuel pool, will be completed within 60 years of permanent cessation of operations. This requirement applies equally to the spent fuel pools at power reactors. Although the regulations at 10 CFR 50.82(a)(3) allow the Commission to extend the time allowed to complete decommissioning and the "...unavailability of waste disposal capacity" is one of the factors to be considered, the Commission will only approve the request when necessary to protect public health and safety. Thus, the GEIS assumes that all spent fuel will be removed from the pool within 60 years, and therefore, the pools would not be used in the long-term or indefinite storage timeframes. Additional information on this assumption and the basis for it can be found in Section D.2.16.10 of this appendix.

Concerning the amount of spent fuel stored in pools, the pool density at each reactor has been subject to site-specific reviews. For example, the NRC assesses the environmental impacts of storage of spent fuel in the pools during operations as part of the initial licensing review. Re-racking to achieve higher density requires the NRC to approve a license amendment. This

review includes an environmental review and as assessment of the possible accidents due to the increased spent fuel density in the pool.

For information on loss of offsite power see Section D.2.35.25 of this appendix. As discussed in Section 2.1.2.1 of the GEIS, in response to the earthquake and subsequent tsunami that damaged the Fukushima Dai-ichi nuclear power facility in Japan, the NRC has placed additional requirements on nuclear power operators to ensure the continued safety of U.S. plants. These include measures applicable to pools, including developing mitigation strategies for severe events and ensuring the reliability of pool instrumentation. The NRC is not aware of any additional studies that would cause it to question the low risk of spent fuel pool accidents. However, the NRC is continuing its work in response to the accident in Japan and will use information it collects to determine whether to update other aspects of power plant design, construction, and operation, including aspects of construction and operation of spent fuel pools.

As explained in Section 1.6.2.2 of the GEIS, the GEIS does not propose or impose safety requirements for the storage of spent fuel, such as expediting the transfer of spent fuel from pools to casks. The GEIS assesses the reasonably foreseeable environmental impacts of continued storage in accordance with current NRC requirements. The impacts of expedited transfer are not within the scope of the GEIS because the NRC does not currently require these actions. The Commission evaluated a staff assessment of expedited transfer in a separate process and issued its decision on May 23, 2014 (NRC 2014a) not to pursue further evaluation of the expedited transfer of spent fuel from pools to dry storage, see Section D.2.50.1 for more information.

The issue of job creation, access to decommissioning funds, generation and storage of spent fuel during the licensed life of a reactor, and refueling are beyond the scope of the GEIS and Rule. No changes were made to the GEIS or Rule as a result of these comments.

(3-2) (88-1) (89-4) (92-1) (112-31-2) (112-6-3) (112-7-3) (112-24-4) (112-18-5) (112-10-6) (126-5) (136-5) (159-1) (163-22-3) (215-2) (245-19-3) (250-11-2) (250-28-2) (250-40-2) (250-29-4) (250-69-4) (257-1) (290-1) (290-3) (291-4) (293-1) (303-3) (309-1) (321-1) (322-4) (325-29-2) (325-29-3) (325-29-4) (325-29-6) (326-15-1) (326-1-2) (326-19-2) (326-20-2) (326-30-2) (326-14-3) (326-15-6) (329-18-4) (341-1-15) (377-4-10) (406-3) (419-13) (451-1) (451-3) (453-3) (454-5) (467-1) (473-8-8) (484-1) (484-2) (494-1) (495-2) (501-3) (513-1) (514-1) (514-3) (514-6) (531-2-20) (552-1-22) (552-1-29) (556-5-5) (566-4) (569-2) (611-42) (633-6) (660-8) (690-3) (693-3-4) (699-5) (707-5) (718-1-15) (723-8) (728-6) (741-3) (757-14) (772-1) (774-8) (789-3) (798-3) (801-5) (801-6) (815-4) (821-7) (823-31) (826-18) (826-7) (860-8) (867-2-6) (883-5) (916-3-15) (926-1) (926-4) (927-6) (929-6) (933-8) (998-4)

D.2.38.7 – COMMENT: Several commenters raised criticality issues in connection with spent fuel storage. One commenter pointed out that NUREG/CR–6835 (Elam et al. 2003) did not consider MOX spent fuel, which has more plutonium-239 than other spent fuel and, therefore, the GEIS should address criticality risks of MOX spent fuel in dry storage and during

transportation. One commenter stated that the "K" factor is affected by the fragility and easy failure of the cladding and the ease with which fuel pellets can form geometries that support recriticality and requested that this issue be addressed in the GEIS. A commenter mentioned NRC Generic Letter 94-04, "Boraflex Degradation in Spent Fuel Storage Racks," (NRC 1996c) to point out that reactors that use Boraflex as a neutron absorber in spent fuel pools are at risk of recriticality due to Boraflex disintegration and that licensees vary in attention to mitigation for this problem. Another commenter addressed the issue of Boraflex degradation in the spent fuel pool and how the industry was addressing the issue by replacing it with a different neutron absorber to prevent criticality in the pool. The comment did not provide any information on how Boraflex degradation or replacement with a different neutron absorber might present environmental impacts.

One commenter suggested another example for inclusion in the GEIS of how the regulatory process works to assure safety. The commenter suggested adding how the NRC and the industry addressed the issue of Boraflex degradation. One commenter stated that vitrification will break down over time and the waste could achieve criticality.

RESPONSE: The NRC agrees in part and disagrees in part with the comments. Criticality safety is addressed in the licensing review conducted for spent fuel dry storage cask and transportation package designs. MOX fuel contains uranium oxide and plutonium oxide, in concentrations designed such that MOX fuel assemblies have a reactivity similar to standard uranium oxide fuel assemblies.

Although it is correct that spent MOX fuel will generally have more plutonium-239 than standard spent fuel assemblies, MOX will also have a greater concentration of higher actinides, which absorb neutrons and tend to reduce reactivity. The net result is that the reactivity of spent MOX fuel is not expected to be significantly different than standard uranium oxide spent fuel. Regardless, MOX fuel in dry storage and transportation is conservatively treated as fresh (i.e., unburned) fuel for purposes of demonstrating criticality safety. This differs from uranium oxide spent fuel, where some of the reduction in reactivity due to burning in the reactor can be credited. This credit can result in as much as a 30 percent reduction in k_{eff}. Note that k_{eff} is a measure of fissile material reactivity and its ability to support a self-sustaining fission chain reaction. A k_{eff} less than 1.0 means that the fissile material system is not capable of supporting a self-sustaining fission chain reaction. The NRC requires k_{eff} to be less than 0.95 under all conditions for dry storage and transportation systems.

Spent fuel dry storage and transportation designs consider fuel reconfiguration (loss of as-designed geometry) where applicable. Structural loads under dry storage conditions are not expected to result in significant fuel reconfiguration. However, high-burnup fuel assemblies, for which the cladding structural properties are assumed to be degraded, are assumed to reconfigure during transportation. The configurations that result in the largest increase in k_{eff} are typically those with uniform pitch expansion (i.e., increased distance between fuel rods) and

varying numbers of missing rods. The combined effect of these configurations is typically less than a 5 percent increase in k_{eff}. Note that commercial fuel assemblies are designed to have a reactivity that is close to optimum, meaning that fuel reconfiguration is more likely to make the geometry suboptimal and decrease k_{eff}. NUREG/CR–6835 (Elam et al. 2003) considered several non-physical scenarios (e.g., complete removal of fuel cladding combined with uniform pitch expansion) to determine an absolute upper bound on k_{eff} due to fuel reconfiguration.

Criticality safety for pool storage is addressed in initial reactor licensing and in any spent fuel pool amendment related to spent fuel pool re-racking or otherwise altering the stored fuel design basis. NRC licensees use various methods to meet subcriticality requirements in the spent fuel pool specified by 10 CFR 50.68 or 10 CFR 50 Appendix A, General Design Criterion 62. Most spent fuel pools now store spent fuel assemblies in high-density racks, which incorporate neutron absorber materials into the rack walls. These neutron absorber materials, especially Boraflex, can degrade enough to lose their neutron-absorbing capabilities and challenge subcriticality requirements. Due to this degradation, many licensees now employ other means to meet subcriticality requirements (e.g., spent fuel loading patterns, fuel burnup credit, control rods or other neutron poisons contained within spent fuel bundles, soluble boron [B] in the pool water, or some combination of these methods). In some cases, a licensee will credit no neutron absorber material and rely entirely on other means to meet subcriticality requirements. In March 2014, the NRC issued draft Generic Letter (GL) 2014-0040, “Monitoring of Neutron-Absorbing Materials in Spent Fuel Pools” (79 FR 13685; March 11, 2014). The NRC has determined that it is necessary to obtain plant-specific information requested in the generic letter so that the NRC can determine if the degradation of the neutron-absorbing materials in the spent fuel pool is being managed to maintain reasonable assurance that the materials are capable of performing their intended safety function and if the licensees are in compliance with the regulations. After the final generic letter has been published in the *Federal Register* and licensees respond in writing, the NRC will evaluate the licensee responses to the generic letter and determine what further actions may be necessary.

In addition to the generic letter mentioned in the comment, the NRC issued Information Notice (IN) 2009-26, “Degradation of Neutron-Absorbing Materials in the Spent Fuel Pool” to all operating reactors licensees and construction permit holders in October 2009 (NRC 2009b). The NRC continues to monitor how licensees are addressing the degradation issue. The NRC agrees that the issue of Boraflex degradation is an example of the successful performance of the NRC’s regulatory framework. A discussion of IN 2009-26 has been added to Appendix B of the GEIS.

Spent fuel is not vitrified before storage in dry casks or for storage in the spent fuel pools. Therefore, issues related to vitrification are outside the scope of the GEIS and Rule. No changes were made to the Rule as a result of these comments.

(329-10-2) (329-10-3) (329-10-5) (378-1) (556-1-38) (834-2) (898-3-7)

D.2.38.8 – COMMENT: Commenters expressed concerns over the feasibility of storage over long periods due to degradation of spent fuel that would cause problems during wet and dry storage and during handling operations. In addition, some commenters stated high-burnup fuel increases degradation issues. Commenters expressed concern that degraded fuel could result in increased worker and public exposure and that the number of defective fuel assemblies varies by reactor. Commenters do not believe current experience with storage of spent fuel is sufficient to support the feasibility of long-term and indefinite storage given the limited understanding of degradation processes and the lack of uncertainty analysis in the GEIS. Some commenters also stated concerns with the degradation of spent fuel pools and dry cask storage systems.

In contrast, some comments provided support for the feasibility of storage, citing robustness and degradation resistance of nuclear fuel design. Two commenters stated that the NRC appropriately addresses concerns being raised about stress-corrosion cracking of dry storage canisters in the SOC for the proposed Rule. They also cited industry efforts to address this concern. Some comments asked how nuclear fuel with stainless-steel cladding was accounted for in the GEIS.

RESPONSE: The NRC agrees in part and disagrees in part with the comments. The comments identify a number of degradation processes that could impact the safety of continued storage of spent fuel. Appendix B of the GEIS discusses industry and regulatory experience with storing spent fuel, including a discussion of degradation processes that could impact the safety of continued storage. The GEIS explains degradation processes and regulatory and industry experience and approaches for maintaining safety by (1) identifying the degradation processes that may affect continued storage and discussing regulatory and industry experience and approaches for addressing degradation concerns; and (2) describing regulatory and industry approaches for continued examination and evaluation of potential issues that might arise from longer storage periods.

Appendix B of the GEIS contains data supporting the slow rates for degradation processes associated with wet and dry storage of spent fuel. Routine maintenance is currently used to maintain safety of spent fuel storage systems and at some future time a decision could be made that replacement is necessary. No method exists to determine precisely when there would be a need to take such a significant measure (i.e., replacement of a dry cask). The GEIS assumes that replacement would occur at 100 years, but Appendix B notes that precise replacement times would depend on actual degradation observed during continued regulatory oversight for maintaining safety during continued storage. Discussions on the role of regulatory oversight in maintaining safety and industry initiatives evaluating the performance of dry cask storage (including the condition of high-burnup spent fuel) have been expanded in Appendix B. As noted below, Appendix B was revised to improve clarity:

1) Dry cask storage is licensed or relicensed for a period of up to 40 years (high-burnup fuel storage has been licensed for 20 years). The experience gained with each licensing period will inform each subsequent licensing action. Additional text has been added to Appendix B to clarify that regulatory oversight will continue to examine the performance of storage systems to: (1) ensure current designs and procedures are appropriate and safe; (2) allow early discovery of any potential problems of storage casks or structures; and (3) allow for early mitigation if issues are discovered.

2) Experience with wet and dry storage of spent fuel continues to grow both nationally and internationally. As experience grows, lessons learned are developed to identify good practices as well as discuss problems that have been encountered and potential solutions (*Spent Fuel Storage Operation – Lessons Learned*; IAEA TECDOC 1725; IAEA 2013). Appendix B provides a variety of examples of how requirements for spent fuel storage have incorporated lessons learned from operational experience, including information from accidents. Aging management programs, including monitoring, continue to be informed by operational experience. The NRC, DOE, other regulators, and the commercial power industry have formed the Extended Storage Collaboration Program. The goal of this program is to better understand the degradation processes that could impact the storage of spent fuel. As new information becomes available, it will be considered in the development of canister design criteria and aging management requirements for the safe storage of spent fuel. Additional text has been added to Appendix B to clarify that (1) should increased degradation of spent fuel cladding occur (i.e., be more brittle), greater care could be required during handling operations, regardless of when repackaging would occur, to limit the potential for damage to spent fuel assemblies that could affect easy retrievability of the spent fuel and complicate repackaging operations; (2) high-burnup fuel can be stored and transported safely if the potential degradation processes are appropriately considered; and (3) damaged fuel has been dealt with in the past and consideration of a handling accident involving damaged fuel is provided in Section 4.18 of the GEIS.

3) Appendix B of the GEIS analyzes the feasibility of safe storage of spent fuel in spent fuel pools and dry storage casks. Part of the basis for concluding that spent fuel can continue to be stored safely is that current technology is available to address known degradation processes. Text has been added to Appendix B to clarify that a commercial DTS is currently not operating in the United States but is considered feasible. Additional discussion has been added to Section 2.2.2.1 (Construction and Operation of a DTS) providing further information regarding the technology available for handling spent fuel, including damaged fuel.

4) Appendix B also describes government and industry initiatives that continue to evaluate safety of continued storage of spent fuel. Although the NRC believes that its current regulatory requirements for extended storage adequately protect public health and safety, and suffice to meet any challenge to the continued safe storage of spent fuel in spent fuel pools or dry cask systems, it is conducting research into the extended storage of spent fuel to ensure its safety

regulations remain up-to-date. For example, the NRC is examining the technical needs and potential changes to the regulatory framework that may be needed to continue licensing of spent fuel storage over periods beyond 120 years: *Identification and Prioritization of the Technical Information Needs Affecting Potential Regulation of Extended Storage and Transportation of Spent Nuclear Fuel* (NRC 2014e). This report considered high-burnup uranium oxide fuel up to a burnup of 62.5 GWd/MTU (peak rod average) and MOX fuel. International efforts are also evaluating degradation mechanisms affecting handling, storage, and transportation of spent fuel (IAEA 2011b). As another example, EPRI is leading a multi-year research project to evaluate the safe storage of spent fuel in dry storage casks (the majority of funding is provided by the DOE). EPRI will design and demonstrate dry cask technology at full scale for evaluating the condition of high-burnup spent fuel during storage. As research continues, if the NRC were to identify a concern with the safe storage of spent fuel, the NRC would evaluate the issue and take whatever action or make whatever change in its regulatory program necessary to protect public health and safety. Additional text has been added to Appendix B providing further details on the government and industry initiatives.

Section 2.1.1.3 of the GEIS states that a small amount of stainless-steel-clad fuel was used in the past and is still being stored under NRC licenses. Stainless-steel cladding may be more susceptible to certain degradation processes (e.g., higher corrosion rate than zirconium alloy cladding) and thus a higher potential for damaged fuel rods to impact handling operations. The GEIS does consider the environmental impacts of damaged fuel, including stainless steel and zirconium alloy clad fuel. The evaluation of accidents in Section 4.18.1.2 of the GEIS considers the impacts from damaged fuel resulting from a handling accident in the DTS (see Section D.2.38.9 of this appendix for further details). The accident analysis is based on a conservatively assumed release that considers the fuel inventory and is not constrained by a specific cladding material. As such, the evaluation is appropriate for both stainless or zirconium alloy cladding.

Further details are provided on high-burnup fuel in Section D.2.38.19 of this appendix, on damaged fuel in Section D.2.38.9 of this appendix, on degradation of spent fuel pools in Sections D.2.40.1 and D.2.40.7 of this appendix, and on the DTS in Section D.2.17.4 of this appendix. No changes were made to the Rule as a result of these comments.

(89-3) (112-18-4) (112-6-5) (116-5) (245-15-3) (245-12-4) (245-31-6) (245-29-9) (246-29-2) (325-28-6) (328-14-3) (328-7-5) (328-8-5) (328-8-7) (341-1-12) (341-1-14) (410-11) (556-1-19) (556-1-37) (608-13) (609-5) (711-34) (827-7-20) (884-1) (897-4-13) (897-4-17) (898-2-10) (898-5-15) (898-1-17) (898-1-3) (898-3-4) (898-2-7) (898-2-8) (942-7)

D.2.38.9 – COMMENT: One commenter raised concerns regarding fuel failure and how it could affect the safety and environmental risk of continued storage. The commenter stated that the draft GEIS only mentioned failed fuel in spent fuel pools. The commenter noted that if fuel failure occurs after dry storage commences, some fuel pellets could be exposed to the environment during transfer of cask contents and the draft GEIS fails to address this issue. The

commenter believes that the issue will be of greater concern with high-burnup fuel. The commenter questioned the statement in the draft GEIS that the NRC was not aware of any studies that would cause it to question the technical feasibility of continued safe storage of spent fuel in dry cask in light of the NRC's statement in its own report, *Identification and Prioritization of the Technical Information Needs Affecting Potential Regulation of Extended Storage and Transportation of Spent Nuclear Fuel* (NRC 2014e), that hydriding, creep, and stress-corrosion cracking can lead to failed fuel in certain conditions and that the level of knowledge regarding these phenomena is low. The commenter believes that this undermines the credibility and integrity of the GEIS. The commenter stated that the NRC's failure to address the effects of failed fuel on safety and environmental risk is remarkable in the context of the NRC's own admission (in a petition response), [10 CFR Part 72: [Docket No. PRM-72-4]: Prairie Island Coalition; Denial of Petition for Rulemaking, (66 FR 9055)] that it does not yet know how it will transfer failed fuel and has not developed procedures to address failed fuel transfer. The commenter believes that this issue is material to the environmental impacts that NRC must assess.

The commenter also stated that the NRC has no basis in data or experience in estimating how much additional damage could be done to failed fuel by transferring it between casks. The commenter stated that the NRC has ignored the fact that failed spent fuel bundles are already stored in dry casks but have never undergone inter-cask transfers.

RESPONSE: The NRC agrees with the comment that fuel failure could affect the safety and environmental impact of continued storage but disagrees with the comment that fuel failure was not considered in the GEIS. The GEIS considers design basis events for dry cask storage systems, including an accident at the DTS involving damaged fuel and an open cask. This accident involves a loss of confinement event that evaluates a release of volatile radionuclides from damaged fuel assuming the high-efficiency particulate air filters are inoperable (Section 4.18.1.2).

The draft GEIS explained degradation of spent fuel could result in conditions (e.g., more brittle spent fuel cladding) that may require greater care in handling operations. In discussing potential degradation mechanisms in the GEIS, the intention was not to dismiss degradation of spent fuel or imply there was no concern for damaged fuel. The intention was to discuss degradation processes and regulatory and industry experience and approaches for maintaining safety by presenting (1) the current understanding of degradation processes that may affect continued storage, (2) regulatory and industry experience and approaches for addressing degradation concerns, and (3) regulatory and industry approaches for continued examination and evaluation of potential issues that might arise from longer storage periods. Appendix B of the GEIS has been revised to clarify the discussion of degradation processes and regulatory and industry experience and approaches.

In addition, the NRC has added text to the GEIS that describes damaged fuel in the context of DTS operations including the methods for handling damaged spent fuel. See Section D.2.17.4 of this appendix for additional information on repackaging damaged fuel. No changes were made to the Rule as a result of these comments.

(897-4-10) (897-4-12) (897-4-14) (898-2-11) (898-2-12) (898-2-13) (898-2-14) (898-2-15) (898-2-17)

D.2.38.10 – COMMENT: Some commenters requested that the GEIS contain a comparison of the variety of possible methods for storing the spent fuel, particularly dry cask storage compared to high-density pool storage. One of the commenters noted that a release of radiation due to a spent fuel pool fire would be much more severe than a release from a dry cask. Another commenter stated that the comparison of storage methods should include HOSS.

One commenter noted that the GEIS does not say that storage in spent fuel pools and dry casks is equally safe, only that these storage methods provide "adequate protection." The commenter requested a definition of adequate protection.

RESPONSE: The NRC disagrees with the comments. The GEIS contains a discussion on the storage of spent fuel in both spent fuel pools and in dry casks. The GEIS supports the conclusion that it is technically feasible to safely store spent fuel in either pools or dry casks following the licensed life for operation of a reactor. A comparison of storage methods is not necessary to determine the environmental impacts of continued storage. Neither the GEIS nor Rule states that storage in spent fuel pools and dry casks is equally safe and determining whether one method is safer than another is not necessary to an analysis of the environmental impacts of continued storage. See Section D.2.50.5 of this appendix for information on inclusion of HOSS.

The AEA, as amended, establishes "...adequate protection of public health and safety" as one of the standards governing NRC rulemaking and licensing. This adequate-protection standard undergirds the Commission's regulations. While the agency has historically declined to quantify the adequate-protection standard, the Commission's regulations and guidance nonetheless give meaning to "adequate protection" through application of the agency's scientific and technical judgments. The agency has stated that compliance with Commission regulations and guidance gives rise to a presumption of adequate protection of public health and safety in any particular proceeding. For example, in its final rule on the backfitting process for power reactors, the Commission stated that Congress did not define adequate protection in the AEA, Congress did not command the Commission to define the term, and that the Commission declined to define the term. Nevertheless, the Commission stated that it "...can still make sound judgments about what 'adequate protection' requires, by relying upon expert engineering and scientific judgment, acting in the light of all relevant and material information." Further, the Commission stated that compliance with the Commission's regulations and guidance "...should provide the level of

safety sufficient for adequate protection...under the AEA," Revision of Backfitting Process for Power Reactors, Final Rule, 53 FR 20603, 20606 (June 6, 1988). In *Union of Concerned Scientists v. NRC*, the Court of Appeals declined to define the term "adequate protection" and upheld the Commission's approach to interpreting and applying the adequate-protection standard "...through case-by-case applications of [the NRC's] technical judgment rather than by mechanical verbal formula or set of objective standards." No changes were made to the GEIS or Rule as a result of these comments.

(72-2) (112-2-3) (143-5) (552-2-27) (938-3)

D.2.38.11 – COMMENT: Many commenters addressed consolidated interim storage. Some commenters thought that NRC's proposal to transfer spent fuel to temporary facilities was not a good idea. Some commenters expressed general opposition to consolidated interim storage and indicated that (1) rather than interim solutions for the storage of spent fuel, we need a permanent solution and (2) interim indefinite storage is not an option. Commenters stated that the risks are increased with consolidated interim storage locations resulting in more targets for potential problems from natural disasters or terrorist activities. Some of the commenters were opposed to consolidated interim storage because it put the communities hosting the facility at risk and no state would want to locate a consolidated interim storage facility in their state, while other commenters cited a concern that relocation of the spent fuel increased the risk of a transport disaster. Others stated that this would transfer cost to the public, result in increased cost, and would allow utilities to place additional spent fuel onsite. Commenters stated that the spent fuel should be moved once and stored near where it is produced until a repository is available. Commenters felt that siting a consolidated interim storage facility would be problematic like the failed attempts to site a repository.

Some commenters stated that the NRC is hiding the problem by transporting the spent fuel to temporary sites around the country and that these temporary sties could become de-facto permanent sites if there are not enough repositories to handle the material. Commenters stated that progress on locating a repository needs to be made. One commenter noted that an interim facility financed by the Federal government is not allowed under current law.

Other commenters supported the use of interim storage facilities because it would allow locally stored spent fuel to be safely removed to a single or regional location controlled and protected by our national government. Commenters stated that consolidated storage presents an overall safer storage environment and a more economical approach to the storage problem because it would eliminate duplication of costly construction of a DTS at each reactor site. Commenters also stated that consolidated storage would reduce the added burden to State and local governments supporting the long-term activities. Commenters stated that interim sites in remote locations had many advantages (e.g., removal of spent fuel from tsunami and earthquake prone areas, storage far from population centers, storage in secure areas away from public access, and a reduction in the terrorist threat). A couple of commenters indicated

that an interim facility should use hardened and earthen covered or buried arrays to make them less vulnerable to attack. Some commenters stated that we must act now and move on developing interim facilities as recommended by the Blue Ribbon Commission on America's Nuclear Future as a necessary part of the nation's waste management strategy so that a facility is available within 60 years. One commenter noted that any community that agrees to be the location for an interim facility needs to have infrastructure, a knowledgeable workforce, and educated citizens that understand both the science and the risk. Commenters noted that the licensing of PFS showed the ability of the NRC to review and approve a temporary storage facility, others pointed out that the facility was never built. Commenters stated that no interim storage policy should be put in place until a repository is operational.

RESPONSE: These comments are beyond the scope of the analysis conducted in the GEIS because the decision on whether or not to use centralized interim storage is a Federal policy decision, and not one made by the NRC. The NRC is not proposing that the spent fuel be transferred to temporary or interim locations. The Commission continues to support timely disposal of spent fuel, but recognizes that the storage of spent fuel may safely continue beyond the licensed life for operation of a reactor. The national policy is still disposal in a geologic repository. In the GEIS, the NRC generically describes the environmental impacts of an away-from-reactor ISFSI large enough to store spent fuel from multiple reactors. The impacts are based, in part, on the NRC's assessment of the environmental impacts of the PFSF that the NRC licensed in 2006, but which the licensee, Private Fuel Storage, LLC, never constructed. Inclusion of the away-from reactor analysis was not intended to endorse interim consolidated storage, but was included in the GEIS because it is reasonably foreseeable that it could occur. If an away-from-reactor facility is proposed by the DOE or a private organization, the NRC would likely be responsible for conducting any license application review and, if appropriate, issuing a license for the facility. Any interim storage facility licensed by the NRC would be subject to the regulations in 10 CFR Part 72. The NRC would prepare a NEPA analysis as part of any licensing review, as well as a safety evaluation report.

The NRC has revised the *Federal Register* Notice and GEIS to clarify that the NRC is not proposing consolidated storage at an interim facility. No changes were made to the Rule as a result of these comments.

(59-14) (147-4) (180-3) (189-2) (205-13) (244-2-3) (245-29-4) (245-14-6) (246-29-10) (246-1-2) (250-30-2) (250-20-3) (250-4-3) (250-49-3) (253-5) (259-1) (276-7) (286-2) (319-7) (325-26-3) (327-20-1) (327-9-2) (327-4-5) (329-33-2) (329-3-3) (343-1) (343-2) (357-5) (368-3) (372-3) (377-1-14) (377-1-15) (377-1-17) (377-2-17) (408-3) (411-2) (425-2) (436-4) (447-2-13) (475-4) (499-2) (507-4) (531-2-18) (543-4) (544-10) (552-1-10) (555-4) (562-12) (562-6) (580-1) (617-4) (618-6) (618-8) (637-4) (642-4) (646-2) (646-4) (646-6) (691-8) (700-3) (706-3-22) (725-1) (739-2) (757-8) (763-4) (765-2) (775-4) (785-4) (787-1) (791-4) (815-6) (819-22) (830-1) (834-4) (836-21) (844-4) (851-9) (852-1) (855-1) (864-7) (883-2) (913-2) (930-1-14) (937-25) (937-26) (939-4)

D.2.38.12 – COMMENT: Several commenters stated that the spent fuel should be stored onsite until a consolidated Federal storage site is established. Commenters stated that the spent fuel should remain onsite because it places the risks and costs of storage in the communities that benefit from the facility, whereas shipping the spent fuel to other storage sites is an externalization of costs; it represents the least hazard to public health in the areas both near the reactors and along transport routes; it is the "least bad" solution; and removal would only encourage the generation of more spent fuel. Some commenters indicated that the spent fuel needed to stay onsite for as long as it is radioactive and that it should be stored in casks because dry storage is safer than pool storage. Commenters asked who is financially responsible once the spent fuel leaves the plant property. One commenter indicated that the companies that generate the spent fuel should pay for the sequestering of it for the thousands of years that it remains radioactive. Several commenters requested that the onsite spent fuel be stored more safely.

RESPONSE: The NRC agrees in part and disagrees in part with the comments. The NRC agrees that spent fuel will continue to be safely stored onsite. The NRC is not requiring that the spent fuel be moved as part of the GEIS and Rule. The Rule does not impose any new requirements on licensees, approve generation of additional spent fuel, or approve movement of spent fuel to new locations; the Rule codifies the generic determinations from the GEIS in the NRC's regulations so that the same generic issues related to continued storage do not need to be revisited in each site-specific proceeding. In most cases, spent fuel will remain onsite until either an interim consolidated storage facility or a repository becomes available. Appendix B of the GEIS provides an analysis of the technical feasibility of safe storage that is based, in part, on the NRC's regulatory framework, which provides controls and oversight of storage activities.

The GEIS includes an analysis of the environmental impacts of transportation of spent fuel to an away-from-reactor site in Section 5.16 of the GEIS. The impacts would be SMALL to MODERATE with the potential for MODERATE impacts being related to traffic at a particular site. An analysis of the environmental impacts of transportation of spent fuel from an at-reactor or away-from-reactor storage site to a repository for permanent disposal would be included in an EIS for the repository.

Licensees are required to provide funding for any onsite spent fuel storage costs under 10 CFR 50.54(bb) and 10 CFR 72.22(e). Under the NWPA, licensees are also required to pay a fee into the Nuclear Waste Fund, which is to be used to fund permanent disposal of spent fuel; DOE recently suspended collection of the fee in response to the decision in *NARUC v. DOE*. The NRC acknowledges that, because of delays in the siting and licensing of a repository, the Federal government bears an increasing financial responsibility for spent fuel storage costs, and may become responsible for paying all the costs associated with spent fuel storage at some time in the future. No changes were made to the GEIS or Rule as a result of these comments.

(6-4) (148-2) (149-1) (163-21-5) (222-3) (246-17-6) (249-10) (250-1-3) (250-40-7) (259-2) (327-23-4) (377-1-12) (377-3-4) (751-2) (824-3)

D.2.38.13 – COMMENT: One commenter expressed the view that the NRC improperly relies on NUREG–0575 (NRC 1979). The commenter noted that the initial Waste Confidence Decision relied, in part, on NUREG–0575 to conclude that storage of spent fuel at reactor sites is acceptable. The commenter believes that the report provided a conservative upper bound to the length of interim storage that constituted a practical upper bound to the forecasting that may be used as a basis for today's decision-making. The commenter states that the NRC has never recognized that NUREG–0575 was based on several incorrect assumptions that result in greatly underestimating the upper bound to the length of onsite storage and that it is inappropriate to rely on this document.

RESPONSE: The NRC disagrees with this comment. NUREG–0575 (NRC 1979) is included in the list of NEPA documents used in preparation of the GEIS (Table 1-1 of the GEIS). However, impact determinations in NUREG–0575 were not relied on in assessing the environmental impacts of continued storage of spent fuel and are not referenced elsewhere in the GEIS. See Sections D.2.5.32 and D.2.9.8 of this appendix for more information related to NUREG–0575 (NRC 1979). No changes were made to the GEIS or Rule as a result of this comment.

(473-7-2)

D.2.38.14 – COMMENT: One commenter stated that while the Earthquake Study was not referenced in the draft GEIS, it was one of its foundations. The commenter expressed the view that the Earthquake Study was developed side-by-side with the proposed Rule to justify its conclusion.

RESPONSE: The NRC agrees with the comment that SECY-13-0112 (NRC 2013l), called Earthquake Study by the commenter, was not referenced in the draft GEIS. The document did not yet exist when the draft GEIS was being developed. As noted in A.16 of Section III of the *Federal Register* Notice for the proposed Rule, the NRC indicated that it would include the reference in the final GEIS if SECY-13-0112 was finalized before the final GEIS was published. SECY-13-0112 is now final, and it is included in the list of references for Appendix F of the GEIS.

SECY-13-0112 and the draft GEIS were separate actions and were not developed side-by-side to justify conclusions. See Section D.2.39.28 of this appendix for information related to how the GEIS considered SECY-13-0112 and changes made to the final GEIS to address SECY-13-0112. No changes were made to the GEIS or Rule as a result of this comment.

(556-5-1)

D.2.38.15 – COMMENT: Two commenters asked what the current safety standards were for spent fuel storage in pools and dry casks. The commenters asked a number of questions on the requirements for cooling and protection from natural disasters. The commenters indicated

that spent fuel storage should be able to withstand earthquakes, storms, floods, and terrorist acts, and be able to handle operator error and equipment failures. The commenters indicated that there is no way to guarantee 100 percent safety and adequate safety is not reassuring and that strong regulations are needed. The commenters asked whether NRC can state with confidence that there is no danger from our current ways of dealing with radioactive waste.

RESPONSE: The NRC agrees in part and disagrees in part with these comments. The NRC sets strict requirements for safe spent fuel storage. Developed through a public process, these requirements provide a sound technical basis for protecting public health and safety and the environment. While 100 percent guarantee of safety is neither possible nor required, the AEA establishes “reasonable assurance of adequate protection of public health and safety” as one of several public health and safety standards governing NRC rulemaking and licensing. The NRC’s requirements for both wet and dry storage can be found in 10 CFR Part 50 (general design criteria in Appendix A that applies to spent fuel pools) and 10 CFR Part 72 (spent fuel storage requirements for dry cask storage), respectively. For example, Appendix A to 10 CFR Part 50 requires that structures, systems, and components that are important to safety, including spent fuel pools, be designed to withstand the effects of natural phenomena (e.g., earthquakes, tornadoes, hurricanes, floods, tsunamis, and seiches) without loss of capability to perform their safety functions. Fuel handling-related accidents are also part of the design basis accidents considered. Similarly, Part 72 has requirements for systems, structures, and components important to safety to be designed to withstand, earthquakes, tornadoes and missiles, aircraft crashes, floods, fires, and cask drop or tip-over. The NRC’s security requirements are in Part 73, including the DBT for radiological sabotage. In addition, the NRC has issued security orders to ISFSI licensees imposing requirements to ensure that a consistent, comprehensive protective strategy is in place for all ISFSIs. Section 4.18 of the GEIS contains additional information on possible accidents and Section 4.19 addresses sabotage and terrorism. The NRC uses these rules to determine that the fuel will remain safe under anticipated operating and accident conditions. There are requirements on topics such as radiation shielding, heat removal, and criticality. In addition, the NRC reviews fuel storage designs for protection against the following phenomena:

- naturally occurring events (e.g., seismic events, tornadoes, and flooding)
- dynamic effects (e.g., flying debris or drops from fuel handling equipment and drops of fuel storage and handling equipment)
- hazards to the storage site from nearby activities.

Reactor licensees and equipment vendors provide detailed descriptions of pool storage racks and dry casks, including extensive tests and analyses to show the equipment and its operation meet NRC requirements. The NRC carefully reviews these submittals. To obtain NRC approval, the designs must meet the following criteria:

- prevent the release of radiation
- be structurally robust
- prevent a nuclear fission reaction
- safely manage heat
- use materials that can withstand radiation, heat, and corrosion.

The NRC requires that spent fuel pools be cooled by an attached cooling system. The system keeps fuel temperatures low enough that, even if cooling were to be lost, operators would have substantial time to recover cooling before boiling could occur in the spent fuel pool. Licensees also have backup ways to cool the spent fuel pool, using temporary equipment that would be available even after fires, explosions, or other unlikely events that could damage large portions of the facility and prevent operation of normal cooling systems. Operators have been trained to use this backup equipment. Licensees have evaluated the backup methods available to provide adequate cooling even if the pool structure loses its water-tight integrity. The cooling system and backup measures are subject to NRC inspection. No changes were made to the GEIS or Rule as a result of these comments.

(63-3) (280-3) (996-2)

D.2.38.16 – COMMENT: Several commenters expressed the view that the NRC cannot finalize the GEIS and Rule at this time because of the many unresolved issues regarding the safety of continued spent fuel storage. A number of issues, including the following, were identified by commenters as requiring resolution: extended cask storage, storage of high-burnup fuel, storage of MOX fuel, dismantled cooling pools leaving no way to transfer spent fuel to new casks, casks used that are not suitable for transportation, spent fuel that can be stranded in deteriorating casks without provision for transfer to new casks, expectation of deteriorated spent fuel rods and no provision for management of such degraded spent fuel rods. Commenters noted that there are ongoing research efforts to look at extended storage and that the information from these studies is needed to complete the GEIS and that the GEIS does not mention the NRC's previously announced 7-year effort to examine extended storage. Commenters requested that the GEIS address the research needs identified by NRC on long-term storage, including such things as experimental alloys, recriticality, degradation mechanisms, stress-corrosion cracking, corrosion, embrittlement, shielding, thermal, structural, swelling of fuel pellets due to helium in-growth, fuel rod pressurization due to additional fuel fragmentation, helium release, fission gas release during accidents, thermal calculations, effects of residual moisture after normal drying, and development of in-service monitoring methods for storage systems. Two commenters noted recommendations from the U.S. Nuclear Waste Technical Review Board for research on extended storage. One commenter expressed the view that the missing information is critical to assessing the health and environmental impacts of spent fuel storage and that without the information the NRC has an inadequate foundation for scientifically sound predictive safety findings. The commenter indicated that the GEIS should

acknowledge the data gaps and that not mentioning the concerns seriously compromises the scientific integrity of the GEIS. The commenter noted that the information is needed to make a central estimate of impacts and to put meaningful uncertainty bounds on impacts.

RESPONSE: The NRC disagrees with these comments. NEPA only requires the NRC to consider the information available when it takes the Federal action that is subject to NEPA, which the NRC has done here. With respect to the comment that asserts that waste confidence is comprised of safety findings, see Section D.2.4.1 of this appendix. In accordance with Commission direction, the NRC is separately examining the regulatory framework and potential technical issues related to extended storage and subsequent transportation of spent fuel for multiple license renewal periods extending beyond 120 years. As part of this effort, the NRC is also closely following DOE and industry efforts to study the effects of storing high-burnup spent fuel in casks. No changes were made to the GEIS or Rule as a result of these comments.

(267-2) (326-9-5) (326-9-6) (459-2) (473-10-2) (502-2) (534-5) (552-3-4) (681-12) (711-29) (756-1) (863-6) (863-9) (897-4-3) (897-4-4) (897-4-7) (897-1-9) (898-1-19) (898-1-20) (898-1-21) (898-1-22) (898-2-3) (898-2-6)

D.2.38.17 – COMMENT: One commenter provided a bibliography of publications from the EPRI that the commenter believed would provide information and analysis related to the GEIS and requested that the NRC review the publications for potential use in preparing the final GEIS. The subjects of these publications include the long-term use of BORAL® in spent fuel storage pools, cost estimate for away-from-reactor spent fuel storage, corrosion considerations for ISFSIs in a marine environment, DTSs for spent fuel, and interim storage of GTCC LLW.

RESPONSE: The NRC acknowledges the references suggested by the comments. The NRC has considered these references and updated the GEIS as appropriate. No changes were made to the Rule as a result of these comments.

(379-1) (379-2) (379-4) (379-5) (379-6) (379-7) (379-8)

D.2.38.18 – COMMENT: One commenter provided comments on the Spent Fuel Pool Study (NRC 2013l). The commenter noted that the study did not contain a relative risk comparison of pool storage with dry casks, did not ask whether pools or dry storage is safer, did not note that the Fukushima dry casks remained unscathed, did not contain an analysis of age degradation of the fuel and refueling cavity, and assumed that there is no risk to casks. The commenter stated that casks can be breached from a shaped charge.

RESPONSE: Comments on the methodology or specific aspects of the NRC's SECY-13-0112 (NRC 2013l) are beyond the scope of this GEIS. Appendix E of the study responds to public comments on various aspects of the study. No changes were made to the GEIS or Rule as a result of these comments.

(556-4-8) (556-4-9)

D.2.38.19 – COMMENT: Many commenters expressed concern about the discussion of high-burnup fuel, MOX fuel, and other types of spent fuel in the GEIS. In general, these commenters were concerned about the continued generation and storage of high-burnup fuel. Some of the comments were technical, whereas other comments were more policy-oriented.

Commenters identified issues of a technical nature that they believe should be addressed in the GEIS. Commenters argued that the NRC did not provide an adequate analysis of high-burnup fuel, MOX fuel, or other spent fuel types in the GEIS. They cite technical differences between high-burnup fuel and low-burnup fuel (e.g., the effect of higher temperatures and greater radiation on spent fuel cladding). The commenters contended that limited data exists on high-burnup fuel, including the amount and plant location of high-burnup fuel generated and stored nationwide. Commenters expressed concerns that MOX is sufficiently different from other fuel types and, therefore, needs specific impact evaluations in the GEIS.

In addition, commenters were concerned that the GEIS does not describe how the NRC will monitor and provide aging management for the high-burnup fuel during the timeframes considered in the GEIS. Another commenter recommended that the NRC explain how new studies regarding high-burnup fuel will be considered in future licensing actions. Commenters also supported the feasibility of the safe storage of high-burnup fuel. Some of these commenters noted that the use of high-burnup fuel creates less spent fuel waste, which makes management easier. Some commenters provided detailed technical comments to support their arguments.

Commenters also identified issues of a policy nature that they believe should be addressed in the GEIS. Some commenters requested that high-burnup spent fuel be removed from certain plants in high-population areas like Diablo Canyon, San Onofre, and Indian Point. Further, many commenters argued that a generic analysis of high-burnup fuel is not appropriate, given the site-specific issues raised in their comments, such as population density and the type of fuel utilized at a particular reactor site. Several commenters argued that the NRC should require the expedited transfer of spent fuel from pools to casks and prohibit the continued production of high-burnup fuel until additional studies can be completed; others recommended the immediate certification of dry casks for high-burnup fuel and the return of spent fuel pool racks to a low-density configuration. These commenters noted that the NRC does not license the storage of high-burnup fuel for more than 20 years and has not approved a cask for the transportation of high-burnup fuel. Some commenters raised concerns related to costs associated with MOX fuel cycle (e.g., costs for reprocessing MOX).

One commenter stated that Table S-3 does not cover MOX fuel use, although the Rule purports to cover it.

RESPONSE: The NRC agrees in part and disagrees in part with these comments. The NRC disagrees with the comments that high-burnup fuel, MOX and other types of fuels are not appropriately addressed in the GEIS. Chapter 2 of the GEIS discusses a variety of fuel types, including an explanation of what is considered within the scope of the GEIS. As explained in Chapter 2, the fuel types within scope are: (1) those fuel types that have been used in the past and continue to be stored under an NRC license; (2) fuel types that are presently used; and (3) fuel types for which the characteristics are similar to fuel used today, are well understood, and may be used in the near future. Uranium oxide fuel for light water reactors, including high-burnup fuel, MOX fuel, and integral pressurized water reactor fuel all fall under the three fuel types discussed in Chapter 2. These reactor fuels are considered sufficiently similar following discharge from the reactor that separate environmental impact analyses for different fuel types are not necessary. Information on the characteristics of low-burnup, high-burnup and MOX fuels (e.g., radionuclide inventories and thermal outputs) has been added to the GEIS (Appendix I) to help clarify the similarities between these fuel types.

The NRC agrees that high-burnup and MOX fuel are subject to increased degradation of the spent fuel and cladding that could cause further problems with handling, storing, and transporting spent fuel. However, the NRC disagrees that the technical capability to safely handle, store, and transport damaged or degraded spent fuel is not technically feasible nor considered in the GEIS (Specific concerns regarding handling of damaged fuel in dry casks are discussed in Section D.2.17.4 and specific concerns regarding transportation of high-burnup fuel are discussed in Section D.2.33.7 of this appendix. The comments reflect both the national and international interest in degradation mechanisms associated with spent fuel and more recently with high-burnup fuel. As described below, the NRC's regulatory program provides regulations and ongoing research to ensure safe storage and timely identification of emerging issues related to spent fuel storage.

NRC regulations for dry cask storage allow for a licensing period of up to 40 years for both initial and renewed licenses. Approval of storage casks for high-burnup fuel has been limited to 20 years due to the more limited data available for high-burnup fuel. These storage times are sufficiently short and the degradation rates of spent fuel sufficiently slow that: (1) significant storage, handling, and transportation issues are not expected to arise during a single license period; and (2) should information collected during the a license period identify any emerging issues and concerns, there would be sufficient time to develop regulatory solutions. Comments did not raise concerns that the 20- or 40-year license period was too long nor was information provided that challenged the slow degradation rates of spent fuel relative to the 20- to 40-year licensing periods.

Ongoing research into the extended storage of spent fuel is part of the NRC's effort to continuously evaluate and update its safety regulations. The NRC is not aware of any deficiencies in its current regulations that would challenge the continued safe storage of spent

fuel in spent fuel pools or dry cask systems. As part of this effort, the NRC is examining the technical needs and potential changes to the regulatory framework that may be needed to continue licensing of spent fuel storage over periods beyond 120 years and in 2014 published: *Identification and Prioritization of the Technical Information Needs Affecting Potential Regulation of Extended Storage and Transportation of Spent Nuclear Fuel* (NRC 2014e). This report considered high-burnup uranium oxide fuel and MOX fuel. International efforts are also evaluating degradation mechanisms affecting handling, storage and transportation of spent fuel (IAEA 2011b). Currently, the Electric Power Research Institute (EPRI) is leading a multi-year research project, the majority of which is funded by the DOE, to evaluate the safe storage of spent fuel in dry storage casks. EPRI will design and demonstrate dry cask technology at full scale for evaluating the condition of "high-burnup" spent fuel during storage. As research continues, if the NRC were to identify a concern with the safe storage of spent fuel, the NRC would evaluate the issue and take whatever action or make whatever change in its regulatory program necessary to protect public health and safety.

To improve clarity regarding the NRC's regulatory approach, Appendix B has been revised to include additional information on monitoring programs, aging management programs, and the collection of operational experience of storage. No changes were made to the Rule as a result of these comments.

With respect to comments that requested policy and regulatory actions, these comments are not within the scope of the GEIS. Additionally, costs associated with activities not associated with continued storage (e.g., reprocessing of MOX) are not within the scope of the GEIS. No changes were made to the GEIS or Rule as a result of the comments requesting policy and regulatory actions.

The NRC disagrees with those comments stating the use of different fuel types at different sites precludes generic analysis. As described previously, the NRC has determined high-burnup and lower burnup fuel to be sufficiently similar that environmental impacts can be evaluated generically based on the assumptions and discussion provided in the GEIS. Further, the GEIS takes variations in population density into consideration as part of the analysis (e.g., Appendix F discusses the impacts of variations in the amount of spent fuel in the pool and the variation in impacts depending on population density), and these variations in site-specific population densities do not render a generic analysis invalid. See Section D.2.11.1 of this appendix for a broader discussion of the NRC's bases for determining that a generic analysis of the environmental impacts of continued storage is possible and appropriate. No changes were made to the GEIS or Rule as a result of these comments.

A number of comments requested that the amount and plant location of high-burnup fuel generated and stored nationwide be provided in the GEIS. Information of this nature is not necessary to evaluate the environmental impacts of continued storage. However, in response to other comments about high-burnup fuel, additional information about high-burnup fuel,

including how it is licensed and transported, is provided in the GEIS as a new appendix (Appendix I). No changes were made to the Rule as a result of these comments.

Finally, with respect to the comment that Table S-3 does not cover MOX fuel activities covered by Table S-3 are outside the scope of the analyses of the direct and indirect impacts of the continued storage of spent fuel. Table S-3 covers impacts that are not caused by continued storage (see Section 1.8.4 of the GEIS). The Rule codifies the results of the GEIS, which does address MOX fuel. See Section D.2.9.8 for a broader discussion of the relationship between Table S-3 and the Rule. No changes were made to the GEIS or Rule as a result of this comment.

(23-2) (63-4) (163-7-1) (163-32-3) (163-36-3) (163-36-4) (163-20-5) (198-3) (211-1) (211-2) (218-7) (218-8) (233-2) (246-5-1) (246-19-3) (246-5-3) (246-2-5) (246-29-8) (249-5) (267-3) (267-4) (267-5) (280-4) (283-1) (283-5) (284-10) (284-9) (293-2) (319-8) (325-2-1) (325-27-1) (325-9-1) (325-8-2) (325-8-4) (325-12-5) (325-28-5) (325-29-5) (326-44-1) (326-3-3) (326-15-9) (328-3-2) (328-3-4) (328-8-4) (328-8-6) (328-8-8) (329-14-1) (329-22-1) (329-22-2) (341-1-13) (358-13) (358-6) (377-1-8) (377-2-9) (379-3) (423-2) (424-1) (425-3) (431-14) (453-2) (453-5) (464-5) (472-2) (473-14-4) (473-14-5) (473-14-6) (477-2) (484-4) (490-3) (515-8) (528-2) (529-5) (529-6) (531-1-11) (531-2-11) (537-3) (540-6) (548-7) (552-1-13) (552-1-14) (552-1-26) (566-8) (611-4) (611-5) (611-7) (619-1-15) (633-3) (648-7) (665-4) (671-2) (693-3-13) (693-3-14) (693-3-15) (700-4) (706-5-10) (706-5-11) (706-5-12) (706-5-13) (706-5-14) (706-5-16) (706-5-17) (706-3-18) (706-5-18) (706-3-19) (706-5-19) (706-5-20) (706-3-21) (706-5-21) (706-5-22) (706-5-23) (706-5-24) (706-5-8) (706-5-9) (711-10) (711-30) (714-2-3) (714-1-5) (714-2-6) (714-1-8) (756-10) (756-11) (756-12) (756-2) (756-3) (756-4) (756-5) (756-6) (756-7) (756-8) (756-9) (764-2) (778-2) (783-2-3) (793-2) (796-2) (819-9) (823-15) (827-3-7) (836-3) (836-4) (836-44) (836-7) (840-4) (851-8) (864-5) (867-3-14) (897-4-11) (897-4-15) (897-4-16) (897-4-2) (897-2-20) (897-4-5) (897-4-6) (897-4-8) (898-2-1) (898-3-1) (898-1-16) (898-5-16) (898-1-18) (898-2-18) (898-2-2) (898-3-2) (898-5-28) (898-3-3) (898-1-4) (898-2-4) (898-5-4) (898-4-6) (898-2-9) (915-14) (915-2) (915-3) (915-4) (919-3-12) (930-2-18) (938-14) (938-6) (944-7)

D.2.38.20 – COMMENT: One commenter asserted that the NRC has proposed reasonable assurance based on a Finding and an assumption that disposal is technically feasible and will have no environmental impact. Another commenter expressed support for the “Conclusions” in the GEIS and noted that the “Conclusions” mirror the structure of the NRC’s previous Waste Confidence Decision.

RESPONSE: The NRC acknowledges the comments supporting the GEIS and Rule, and disagrees with the comment’s assertion that the NRC has proposed a reasonable assurance finding based on assumptions. First, the conclusions in the GEIS and in the *Federal Register* Notice are the result of extensive analysis by the NRC and other experts. See Appendix B for a detailed discussion of the technical feasibility of repository disposal and safe storage. Second, this proceeding does not analyze the potential environmental impacts of disposal and does not

rely on any disposal determination made in any other proceeding. NRC regulations and Section 185 of the AEA (1954) require the NRC to make reasonable assurance findings as part of its safety review associated with licensing decisions. A future application for a spent fuel repository would be subject to a determination whether the applicant has demonstrated the requisite "reasonable assurance" as required by applicable regulations. However, a reasonable assurance finding regarding a disposal facility is not required—nor is such a determination made—in this proceeding, where the NRC is preparing a generic NEPA analysis that is not connected to the licensing of a disposal facility. No changes were made to the GEIS or Rule as a result of these comments.

(244-14-2) (827-6-4) (827-6-5)

D.2.39 Comments Concerning Spent Fuel Pool Fires

D.2.39.1 – COMMENT: Several commenters stated that any consideration of spent fuel pool risks should address the volume of spent fuel stored in spent fuel pools, the lack of hydrogen mitigation and hardened vents, and the lack of redundant emergency makeup and cooling systems for spent fuel pools.

RESPONSE: The NRC agrees in part and disagrees in part with the comments. Each of the issues identified could have an impact on the risk associated with spent fuel pool fires; however, the comment did not identify any deficiencies in Appendix F of the GEIS related to these issues. The NRC is reevaluating each of these issues in the context of lessons learned from the accident at Fukushima. Should this reevaluation identify any changes sufficiently beneficial to public health and safety, the NRC will take action through appropriate regulatory processes, as necessary. Any changes that may result would not alter the findings in the GEIS related to spent fuel pool fires. Should any changes be implemented, the changes would likely reduce the probability of a spent fuel pool fire occurring; reduce the consequence of a spent fuel pool fire, should one occur; or both. As a result, the risk of a spent fuel pool fire would be less than what was considered in the GEIS.

More information about the activities associated with the ongoing evaluation of lessons learned from the accident at Fukushima can be found on the NRC's website: http://www.nrc.gov/reactors/operating/ops-experience/japan-dashboard.html. No changes were made to the GEIS or Rule as a result of these comments.

(89-5) (531-2-21) (552-2-2) (757-2)

D.2.39.2 – COMMENT: Several commenters expressed concerns related to the potential for, and consequences of, a spent fuel pool fire. One commenter stated that the GEIS needed to consider the risk of spent fuel pool fires. One commenter stated that having spent fuel pools at a particular reactor site added additional potential sources for nuclear accidents, while another

stated that residents located near a spent fuel pool would have to live with the potential for spent fuel pool fires for up to 60 years after operations cease. Some commenters stated the concern that spent fuel is “highly flammable” and would “burn spontaneously” if exposed to air. Other commenters asserted that the greater density of spent fuel stored in the pools has increased the risk of a fire. Several commenters stated that spent fuel pools are vulnerable to a variety of events that could cause a loss of cooling and subsequent fire in a spent fuel pool. Commenters also stated that spent fuel pool fires are more likely to have large releases of radioactivity due to the fact that spent fuel pools are located outside of reactor containments. Some commenters stated that the consequences of a spent fuel pool fire would be disastrous or a “national disaster of historic dimensions.” Similarly, some commenters stated that the consequences of a spent fuel pool fire would be greater than the consequences of a reactor accident, with some commenters pointing specifically to the accidents at Three Mile Island, Chernobyl, and Fukushima. Several commenters asserted that the NRC had concluded in the GEIS that the risk of a spent fuel pool fire would be “inconsequential” because of the low probability of an occurrence. These commenters disagreed and stated that the enormous consequences of a fire, which could displace more than four million people, make any risk unacceptable, regardless of the probability.

RESPONSE: The NRC agrees in part and disagrees in part with the comments. The analysis of spent fuel pool fires in Appendix F of the GEIS is based on the NRC’s extensive evaluations of the risk and consequences of spent fuel pool fires and considers a range of credible initiating events that could lead to a spent fuel pool fire.

The NRC agrees that the consequences of a spent fuel pool fire would be significant, but disagrees that the NRC had concluded that the consequences of a spent fuel pool fire would be “inconsequential” because of the risk. As described in Appendix F, a significant amount of radiation could be released in the event of a spent fuel pool fire. Further, the NRC agrees that the extent of contamination from a spent fuel pool fire could exceed that of a reactor accident at a given site, for reasons such as the amount of spent fuel in a pool compared to a reactor and the location of most spent fuel pools outside of a containment structure. However, because of factors such as the robust design of spent fuel pools and the range of credible events that could lead to a spent fuel pool fire, the probability of a spent fuel pool fire is significantly less than that of a reactor accident. When viewed in light of the extremely low probability of an event, the NRC has found that the environmental impacts from a spent fuel pool fire are SMALL during the short-term timeframe. While this finding is applicable for the entire short-term timeframe, it is important to note that the probability and, therefore, the risk of a spent fuel pool fire would decrease dramatically throughout the short-term timeframe as the spent fuel cools.

The NRC disagrees with comments that characterize spent fuel as “highly flammable” or state that spent fuel would “burn spontaneously” if exposed to air, as use of these descriptions imply that the zirconium cladding of spent fuel would ignite immediately after being exposed to air.

While spent fuel cladding could begin to oxidize rapidly (i.e., “burn”) during certain scenarios involving extended loss of spent fuel pool water, this would not occur until several hours after the fuel has been uncovered, assuming the event takes place at the beginning of the short-term timeframe. This distinction is important, because it allows operators time to re-establish cooling to the spent fuel pool and prevent a fire, or take actions to mitigate the consequences of a spent fuel pool fire, should one occur. Further, the time available until spent fuel cladding would begin to “burn” increases significantly after a few years of pool storage due to the decreased heat generated from fission product decay. This delayed onset would allow operators even more time to take the actions necessary to prevent, or mitigate a spent fuel pool fire.

For the issue of high-density loading of spent fuel in a pool, the Commission has evaluated the risks of high-density loading in the context of expediting the transfer of spent fuel from a pool to an ISFSI as part of evaluating the lessons learned from the accident at Fukushima. For further discussion on this issue, refer to Section D.2.50.1 of this appendix. No changes were made to the GEIS or Rule as a result of these comments.

(23-9) (163-20-4) (230-11) (246-16-8) (250-40-3) (250-40-4) (250-29-7) (284-13) (319-10) (358-5) (377-3-6) (410-8) (447-1-16) (552-2-3) (556-5-12) (634-9) (711-14) (714-2-1) (819-11) (826-16) (840-10) (864-4) (916-2-22) (916-3-3)

D.2.39.3 – COMMENT: A commenter stated that the NRC was knowingly covering up the potentially catastrophic outcome of a spent fuel pool fire and referenced the value of prompt fatalities presented in Table F-1 of this GEIS. The commenter asserted that the value in the table is unreasonably low.

RESPONSE: The NRC disagrees with the comment. The discussion in Appendix F of the GEIS presents the best available information of the risk and consequences of a spent fuel pool fire. The comment does not present any information that would challenge the estimate in Table F-1. No changes were made to the GEIS or Rule as a result of this comment.

(826-23)

D.2.39.4 – COMMENT: Several commenters stated that the NRC’s evaluation of spent fuel pool fires is generally deficient or downplays the risk of fires, which could have catastrophic consequences, possibly displacing millions of people and imposing severe economic damage. Several commenters cited the NRC’s conclusion of a low probability of a spent fuel pool fire as the reason, in their opinion, that the NRC has downplayed or dismissed the issue of spent fuel pool fires. One commenter pointed to statements by the NRC conceding that the possibility of a zirconium fire occurring years after a final reactor shutdown cannot be dismissed. One commenter stated that the NRC’s analysis of fires and leaks is not what the Court of Appeals intended in *New York v. NRC* and is not in compliance with NEPA. One commenter took issue with the estimate from NUREG–1738 (NRC 2001b) cited in the GEIS of 191 early fatalities in

the event of a spent fuel pool fire, and stated that the conclusions in the GEIS regarding pool fires contradict conclusions found in other studies. Another commenter said that the GEIS underestimates the risk of pool fire, and ignores the safer alternative of HOSS at power plants. One commenter noted that over the course of the indefinite timeframe, an accident is all but inevitable, yet the NRC continues to consider the impacts of spent fuel pool fires low.

RESPONSE: The NRC disagrees with the comments. The evaluation of spent fuel pool fires in the GEIS is not deficient and does not downplay the risk of fires. As described in Appendix F, a significant amount of radiation could be released in the event of a spent fuel pool fire. Assessing the probability of a spent fuel pool fire in the analysis does not downplay or dismiss the results, but rather provides an appropriate context for a decisionmaker when considering the consequences of an event. The evaluation of spent fuel pool fires in the GEIS takes into account that a spent fuel pool could be in service during the entire short-term timeframe, and it therefore considers the possibility of a zirconium fire occurring years after a final reactor shutdown. The NRC disagrees that a spent fuel pool fire is all but inevitable over the indefinite timeframe. As described in Chapter 1 of the GEIS, spent fuel is expected to be removed from the spent fuel pool during the short-term timeframe. In addition, the NRC disagrees that the conclusions in the GEIS are contradicted by the two studies referenced in the comment. Neither study—one was an NRC study, the other cited consequence values from an NRC study—was intended to be used for a generic consideration of spent fuel pool risk. Further, neither study portrays a significantly different picture of the risk of spent fuel pool fires than the one contained in this GEIS.

The NRC disagrees that the analysis in this GEIS of spent fuel pool fires and leaks is not what the Court of Appeals intended and is not in compliance with NEPA. The NRC believes that the analysis contained in the GEIS appropriately addresses the Court of Appeals' concerns and is in compliance with NEPA, because the evaluation in Appendix F of the GEIS provides a clear and thorough discussion of the significant consequences that could occur in the event of an unmitigated spent fuel pool fire.

For a discussion of HOSS, refer to Section D.2.50.1 of this appendix. No changes were made to the GEIS or Rule as a result of these comments.

(112-18-1) (246-22-4) (246-2-7) (325-22-2) (531-2-19) (552-2-6) (552-2-8) (648-10) (916-3-22)

D.2.39.5 – COMMENT: Several commenters provided examples of reasons they felt the analysis of spent fuel pool fires in the GEIS was flawed and led to an underestimation of the consequences of a spent fuel pool fire. One commenter stated that the GEIS failed to comply with the NRC's regulations at 10 CFR 52.157. One commenter stated that the GEIS relies on the spent fuel pools having only 3.5 cores in the spent fuel pool, while some spent fuel pools are licensed to contain up to 16.7. Some commenters stated that the NRC failed to properly consider a range of initiating events for spent fuel pool fires (e.g., cask drops, extreme weather

events, spent fuel pool collapse) and the linkage between reactor and spent fuel pool accidents. One commenter stated that the GEIS only considered atmospheric releases of noble gases and a small fraction of cesium. One commenter contended that the NRC underestimated the cost of cleanup because cleanup is a long and expensive job, is not modeled correctly, and there is no cleanup standard. One commenter stated that the NRC did not take into account building density and that increased building density leads to higher levels of contamination, which leads to higher radiological and economic costs. Several commenters suggested that the NRC should have aggregated spent fuel pool fire risk across all reactor sites, or cumulatively assessed risk across the entire short-term timeframe. Similarly, one commenter faulted the NRC for taking a reference reactor approach to analyzing consequences. Two commenters stated that the NRC potentially underestimated the consequences of a spent fuel pool fire because it did not account for sites with higher populations. Further, one commenter stated that the NRC did not account for the potential correlation between seismic risk and population density. This commenter stated that the NRC should either use a correlation coefficient to correct the frequency-weighted probabilities presented in Table F-2 of the GEIS, or calculate the collective dose risk and economic cost risk for each site to determine a new average consequence value. Commenters stated that the NRC ignored the potential for an attack on a spent fuel pool and did not consider the potential for the risk environment to deteriorate. Some commenters asserted that the GEIS analysis of environmental impacts should not be limited to 80 km (50 mi) because thermal plumes could carry radioactivity for hundreds of miles downwind. A commenter also questioned the actual probability of a spent fuel pool fire. One commenter stated that the NRC did not adequately account for the potential social, economic, and political upheaval that could occur in the event of a spent fuel pool fire. One commenter cited two studies, from Bayea et al. and from IRSN, as examples of how the NRC has underestimated the economic consequences of a spent fuel pool fire. One commenter cited results from SECY-13-0112 (NRC 2013l) as support for the claim that the NRC underestimated the consequences in the GEIS. One commenter suggested, quoting language from *New York v. NRC*, that the NRC did not do a proper analysis of spent fuel pool fires because the consequences of a fire were not analyzed. The commenter suggested that the NRC was required to do so, unless it could conclude that the probability of the event occurring was “remote and speculative.”

RESPONSE: The NRC agrees in part and disagrees in part with these comments. As discussed in Section D.2.39.23 of this appendix, the NRC recognizes that there are uncertainties in the estimation of environmental impacts and that a variety of factors can affect the actual estimates at a given plant. The NRC also recognizes that a number of analyses have provided quantitative estimates of the potential impact of the spectrum of accidents that could occur at spent fuel pools. Several of these are discussed in Section 4.3 of the GEIS. The GEIS has been updated to include a discussion of recently published analyses (e.g., SECY-13-0112 [NRC2013l]). The NRC notes that the determination of the impacts from a potential spent fuel pool accident involves consideration of both likelihood and consequence, and that the use of these estimates would require a consideration not only of the consequences reported in those

studies, but an evaluation of the relevance of those analyses to the purpose of the GEIS. As discussed in Section D.2.39.23 of this appendix, the NRC believes that use of the quantitative estimates from the reference plants in NUREG–1738 (NRC 2001b) and NUREG–1353 (NRC 1989a), together with a discussion of the heterogeneity and uncertainty in factors that can significantly affect quantitative estimates and a reasoned evaluation of the extent to which these considerations would affect estimates of environmental impacts of spent fuel pool accidents, is a reasonable and adequate approach for evaluating environmental impacts. The NRC agrees that certain factors (e.g., population density, seismic risk, and spent fuel pool inventory) are both important to the estimation of environmental impacts and can vary across plants, and that other factors (e.g., the methodology used to quantify the cost and effectiveness of decontamination) are subject to uncertainties. Appendix F has been revised to include more discussion of these factors and their potential impacts on the quantitative estimates to ensure that these factors are fully disclosed and considered.

The NRC disagrees that the GEIS fails to comply with the NRC's regulations at 10 CFR 52.157. The requirements at 10 CFR 52.157 are applicable for entities seeking a license for a nuclear power reactor manufacturing license and are not relevant to the assessment of the environmental impacts of continued storage.

Several comments noted that quantitative estimates were provided only for the area within 80 km (50 mi) of the plant. Section 4.3.3 of the NRC regulatory analysis guidelines (NUREG/BR-0058; NRC 2004f) explains that the NRC examines changes in public health and safety from radiation exposure and offsite property impacts from nuclear power plants over a 80 km (50 mi) distance from the plant site, and these studies therefore reported impacts out to 80 km (50 mi). The NRC recognizes that for large releases, aerosols can be transported long distances. The potential impact of this phenomenon is described in Chapter 7 of SECY-13-0112 (NRC 2013l). See, for example, Tables 35 and 36 of SECY-13-0112, which show the difference between the amount of interdicted land and displaced individuals within 80 km (50 mi) and for the entire modeling domain for a range of accidents, and Figure 96, which shows how individual cancer risks drop as a function of distance from the plant for different types of release magnitudes (NRC 2013l). Appendix F has been updated to expand the discussion of the potential distance over which impacts may be observed and how this would affect the quantitative estimates of environmental impacts.

Several comments noted the possibility of a correlation between population density and seismic hazard. The NRC recognizes the calculation used to compute the frequency-weighted consequences is based on the assumption that these values are uncorrelated, and that the resulting number could be either higher (if they were positively correlated) or lower (if they were negatively correlated). However, the NRC does not know of the potential for a significant positive correlation between the population density and the seismic hazard for reactor sites in the United States that would significantly change the quantification of the frequency-weighted

environmental impacts, and therefore considers the approach of treating these variables as uncorrelated to be a reasonable approach.

Several comments pertained to the potential for a concurrent reactor accident that would challenge the ability to prevent or mitigate a loss of pool cooling accident. As discussed in Section D.2.39.28 of this appendix, the NRC notes that the effect of concurrent reactor accidents, which is relevant to analyses of spent fuel pool fires at operating reactors, is considerably less significant to the continued storage impact analysis at permanently shutdown reactors. Concurrent reactor accidents are theoretically possible very shortly after final shutdown before removal of spent fuel or at multi-unit sites with decommissioning and operating units, but the NRC believes that the interactions between the reactor and the spent fuel pool described by the comments is less likely at locations covered by the scope of the GEIS than at an operating reactor spent fuel pool.

Several comments requested analyses of an accident occurring anywhere in the United States, rather than the reference facility approach used in the GEIS. As discussed in Section D.2.39.23 of this appendix, the NRC believes that the reference facility approach used in the GEIS provides a reasonable and adequate generic consideration of the environmental impacts. Further, the NRC disagrees it should have aggregated spent fuel pool fire risk across all reactor sites, or cumulatively assessed risk across the entire short-term timeframe. For additional discussion as to why aggregating risk is inappropriate, see Section D.2.35.17 of this appendix.

Finally, the NRC disagrees that it did not do an analysis of spent fuel pool fires consistent with the Court of Appeals' ruling. The evaluation in Appendix F of the GEIS provides a clear and thorough discussion of the significant consequences that could occur in the event of an unmitigated spent fuel pool fire. No changes were made to the Rule as a result of these comments.

(30-8-4) (552-2-17) (552-2-25) (552-2-31) (556-5-13) (556-2-18) (556-2-19) (556-2-20) (556-1-23) (556-1-24) (556-4-5) (634-6) (711-15) (711-33) (711-41) (718-4-13) (718-2-6) (718-4-7) (718-5-7) (718-4-8) (723-7) (815-2) (851-5) (897-1-11) (897-6-18) (897-6-19) (916-2-17) (916-2-20) (916-3-20) (916-1-21) (916-2-21) (916-1-22) (916-3-5)

D.2.39.6 – COMMENT: Several commenters stated that the NRC's analysis of spent fuel pool fires in the GEIS is not bounding and is, therefore, deficient for its purposes. Commenters specifically stated that the analysis is not applicable for sites with high-population densities, such as Indian Point, and is only valid for the Surry site. Commenters stated that the NRC should either perform a bounding analysis, or conduct a site-specific analysis of spent fuel pool fire risk.

RESPONSE: The NRC disagrees with these comments. As described in Appendix F, the primary basis for the NRC's evaluation of spent fuel pool fires is NUREG–1738 (NRC 2001b).

As described in Section D.2.39.23 of this appendix, NUREG–1738 was developed as a generic analysis of spent fuel pool fire risk at decommissioning reactor sites and is therefore suitable for the conclusions in the GEIS. Because spent fuel pool fire risk during continued storage can be evaluated generically, a site-specific analysis is not necessary for the purposes of this GEIS.

The analysis in Appendix F did not include a worst-case look at the consequences of a spent fuel pool fire based on the characteristics of every site, nor is such an analysis required by NEPA. The consequence results in Appendix F provide a reasonable representation of the consequences of a spent fuel pool fire at a typical site. As described in Section D.2.39.23 of this appendix, the NRC has added discussion in Appendix F to describe the site-specific factors (e.g., population density) that may impact the consequences of a spent fuel pool fire. However, the assumptions used in the analysis are sufficiently conservative to bound the impacts such that variances that may occur between sites are unlikely to result in environmental impact determinations greater than those presented in the GEIS. Therefore, the impact determination in Appendix F would apply at all sites. No changes were made to the GEIS or Rule as a result of these comments.

(473-13-8) (710-15) (718-5-2) (898-5-10)

D.2.39.7 – COMMENT: The NRC received comments stating that spent fuel pool fire risk cannot be assessed generically, and that an impact determination of SMALL is unrelated to whether the NRC was certain of the risk at any plant. As support for their claim, commenters pointed to past instances where the NRC has generically ruled out determining an age beyond which spent fuel would no longer be susceptible to fires.

RESPONSE: The NRC disagrees with these comments. In the GEIS, the NRC has provided its assessment of the probability and consequences of a spent fuel pool fire assuming that the risk persists throughout the short-term timeframe. Consistent with assumptions in NUREG–1738 (NRC 2001b), there is no assumption in the GEIS of a period of time following reactor shut down after which spent fuel is air-coolable and a spent fuel pool fire is not possible. Therefore, variations among plants that can affect when spent fuel may actually become air-coolable, which include factors such as the age of the spent fuel, fuel burnup, fuel type (i.e., PWR or BWR), and storage configurations do not affect the GEIS analysis of the probability and consequences of spent fuel pool fires. However, research sponsored by the NRC since publication of NUREG–1738 (NRC 2001b) does suggest that spent fuel pool fire risk is unlikely to persist beyond the first few years of continued storage in spent fuel pools. As discussed in Section D.2.39.23 of this appendix, the GEIS has been revised to explain the results of the more recent research and why the risk results presented in Appendix F of the GEIS are therefore conservative. No changes were made to the GEIS or Rule as a result of these comments.

(718-3-13) (867-3-17)

D.2.39.8 – COMMENT: Several commenters provided examples of reasons they felt that the analysis of spent fuel pool fires in Appendix F was not applicable at the Indian Point or Diablo Canyon sites. Several commenters identified specific Indian Point-related issues they felt made the analysis in Appendix F inapplicable for Indian Point, including the following:

- high-density spent fuel pool loading
- seismicity concerns
- use of high-burnup fuel
- boron dilution events
- presence of natural gas pipelines
- higher population density
- concerns about terrorism
- concerns about the adequacy of emergency plans

One commenter stated that the evaluation in Appendix F does not bound the impacts that could occur in the event of a spent fuel pool fire at Indian Point. Several commenters presented examples of impacts they believed could occur in the event of a spent fuel pool fire at Indian Point or Diablo Canyon.

RESPONSE: The NRC disagrees with these comments. The assumptions used in the analysis of spent fuel pool fires are conservative enough to bound the impacts such that variances that may occur between sites are unlikely to result in environmental impact determinations larger than those presented in the GEIS. Therefore, the impact determination in the GEIS would apply at all sites, including Indian Point and Diablo Canyon. Several of the concerns raised relating to Indian Point (e.g., high-density spent fuel pool loading, the use of high-burnup fuel, and boron dilution events) are not unique to Indian Point and the comments do not make it clear how these factors would cause a spent fuel pool fire to be different at Indian Point than anywhere else. Relative to the presence of two natural gas pipelines on the Indian Point site, an evaluation of a simultaneous rupture and ignition of both pipelines determined that there would be no adverse effects on vital areas of the plant (NRC 2011h) and, therefore, would not result in a different impact determination in the GEIS. For the site-specific spent fuel pool consequence examples discussed, the comments do not identify any specific deficiency in the analytical approach used in the GEIS analysis. Further, it is not clear from the comments how the probability-weighted consequences would result in a different impact determination for either the Indian Point or Diablo Canyon site.

For discussions regarding how site-specific variables (e.g., seismicity and population density) are accounted for in the GEIS, threats due to terrorism at Indian Point, and the adequacy of emergency plans, see Sections D.2.39.5, D.2.36.2, and D.2.44.2 of this appendix, respectively. No changes were made to the GEIS or Rule as a result of these comments.

(366-1) (447-1-19) (447-1-20) (447-1-21) (611-43) (706-7-22) (710-14) (710-16) (718-3-15)

D.2.39.9 – COMMENT: Two commenters stated that the NRC should further discuss conservatisms in its evaluation of spent fuel pool fires.

RESPONSE: The NRC agrees in part with these comments. While the NRC believes that the discussion in Appendix F sufficiently characterizes the conservative assumptions in NUREG–1738 (NRC 2001b), additional discussion of the factors that can influence the outcome of a spent fuel pool fire is warranted. For additional discussion on the basis for selecting NUREG–1738 as the primary technical basis for the analysis in Appendix F, as well as a discussion of the changes being made in Appendix F to clarify the factors that could influence the consequences of a spent fuel pool fire, see Section D.2.39.23 of this appendix. No changes were made to the GEIS or Rule as a result of these comments.

(694-3-18) (697-3-5)

D.2.39.10 – COMMENT: One commenter stated that the NRC should undertake additional analyses of spent fuel pool fire phenomena because the NRC "has not yet established a solid technical understanding of relevant phenomena." In support of the claim, the commenter highlighted a statement from Dr. Dana Powers, a member of the Advisory Committee on Reactor Safeguards, in which Dr. Powers stated, "[...] the best use of available resources would be to assure that mitigation of partial drain events was assured and that complete drain events were highly improbable. This would obviate the need for a detailed understanding of accident phenomenology." The commenter stated that a partial loss of water cannot be assured in many situations and that the probability of a partial or complete loss of water from a spent fuel pool is significant. Therefore, the commenter stated that because the consequences of a spent fuel pool fire are significant, the NRC should require low-density configurations of spent fuel and conduct a thorough investigation of spent fuel pool fire phenomena.

RESPONSE: The NRC agrees in part and disagrees in part with this comment. The NRC agrees that accident progression modeling involves a number of complex technical phenomena and associated uncertainties. As discussed in Section D.2.39.23 of this appendix, the NRC chose to develop its generic analysis of the environmental impacts of spent fuel pool fires by selecting a reasonable existing analysis to provide a basis for its quantitative estimates of the impacts, and then discuss any significant uncertainties and whether or how these uncertainties would affect the quantitative estimates provided in that analysis. While uncertainties remain, the assumptions used in the analysis are sufficiently conservative to bound the impacts such that variances that may occur as a result of these uncertainties are unlikely to result in environmental impact determinations greater than those presented in the GEIS. For example, because of the uncertainties associated with modeling accident progression phenomena, NUREG–1738 (NRC 2001b) assumed that a fire would be initiated if the water level reached 0.9 m (3 ft) from the top of the spent fuel, and used the source terms from NUREG–1465 (NRC 1995) to evaluate consequences. Use of the NUREG–1465 source term in NUREG–1738, see Appendix 4B of NUREG–1738, means that the consequence estimates in the GEIS are based on a 75 percent

release of radioiodine and radiocesium, the two radioisotope groups that contribute the most to offsite consequences. In addition, to address potential uncertainties in the source term, NUREG–1738 computed consequences for a modified source term that assumed a 75 percent release fraction for ruthenium and 3.5 percent release fractions for lanthanum and cerium. The consequences from such a release are provided in Appendix F of the GEIS.

However, the NRC disagrees with the assertion that the NRC "has not yet established a solid technical understanding of relevant phenomena." As described in Section 1.7 of SECY-13-0112 (NRC 2013l), the NRC has spent decades researching and analyzing spent fuel pool fire phenomena and continues to undertake new studies and analyses. Following publication of NUREG–1738 (NRC 2001b), the NRC continued spent fuel pool accident research by applying best-estimate computer codes (i.e., MELCOR) to predict the severe accident progression following various postulated accident initiators. The computer code studies identified various modeling and phenomenological uncertainties that prompted a need for experimental confirmation of the models for both PWR and BWR spent fuel pools. These experimental programs were conducted at Sandia National Laboratories. The BWR experimental program was conducted from April 2004 until November 2006. The PWR experimental program is part of an international effort established with the Organization for Economic Co-operation and Development with 13 countries participating. The main objective of the experimental work was to provide basic thermal-hydraulic data associated with a loss-of-coolant accident. The accident conditions of interest for the spent fuel pool were simulated in a full-scale prototypic fashion (i.e., electrically heated, prototypic assemblies in a prototypic spent fuel pool rack) so that the experimental results closely represent actual fuel assembly responses. A major impetus was to facilitate severe accident code validation and reduce modeling uncertainties within the MELCOR code. The NRC is currently engaged in various international activities related to the spent fuel pool draindown accident research. Although unnecessary to support the conclusions of the GEIS, the NRC notes that it is engaged in ongoing discussions with Sandia National Laboratory and the Paul Scherrer Institute (Switzerland) about the possibility of a model development activity to address the phenomena associated with nitriding. In addition, IRSN (France) is coordinating a study of partial draindown events, air ingress, and efficacy of sprays that involves a number of countries.

For additional discussion on the issue of whether NRC should require expedited transfer to achieve low-density configurations of spent fuel, refer to Section D.2.50.1 of this appendix. No changes were made to the GEIS or Rule as a result of these comments.

(916-2-13)

D.2.39.11 – COMMENT: One commenter asserted that the NRC has dismissed the problem of spent fuel pool aging and deterioration by ignoring an NRC-sponsored report, NUREG/CR–7111 (Copinger et el. 2012), which stated that as nuclear power plants age, aging-related degradation of spent fuel pools is occurring at an increasing rate. Instead, the commenter

stated that the NRC relied on “a study done 25 years ago, before aging effects were being observed.”

RESPONSE: The NRC disagrees with the comment. The information in NUREG/CR–7111 (Copinger et al. 2012) most relevant to the analyses in this GEIS includes the descriptions of spent fuel pool leaks and age-related concrete degradation. This information was cited throughout Appendix E of the GEIS. NUREG/CR–7111 does not contain information about age-related concrete degradation in spent fuel pools that would challenge the NRC’s evaluation of spent fuel pool fires. In addition, as discussed in the GEIS, NUREG–1738 (NRC 2001b) represents the NRC’s best forward-looking judgment concerning spent fuel pool fire risk during the short-term storage timeframe. No changes were made to the GEIS or Rule as a result of this comment.

(552-2-24)

D.2.39.12 – COMMENT: Several commenters stated that the NRC inadequately considered the issue of a partial draining of the spent fuel pool in its consideration of spent fuel pool fires. Commenters stated that a partial draindown of a spent fuel pool would be a more limiting, worst-case scenario than a complete draindown, because the remaining water would block air flow in the spent fuel pool, thereby reducing, or eliminating the capability to air-cool the spent fuel. One commenter stated that the NRC acknowledged the greater risk of partial draindown in NUREG–1738 (NRC 2001b). Another commenter cited a 2013 report from students at Pennsylvania State University as support that a partial drain of a spent fuel pool would be more likely than a complete draining of the pool.

RESPONSE: The NRC agrees in part and disagrees in part with these comments. As described in Appendix F of the GEIS, a significant portion of the NRC’s analysis for spent fuel pool fires is derived from NUREG–1738 (NRC 2001b)—see Section D.2.39.23 of this appendix for a more extensive discussion of the basis for the selection of NUREG–1738. As the comments point out, the effect of a partial draindown is to restrict airflow to the spent fuel. However, the presence of water above the spent fuel pool baseplate, but below the elevation where it would provide effective cooling, has both positive and negative effects for spent fuel pool zirconium fires relative to a complete draindown. The effects of restricted airflow were incorporated in NUREG–1738 by the finding that a criterion of “sufficient cooling to preclude a fire” cannot be defined on a generic basis. Therefore, NUREG–1738 assumed that a fire would be initiated if the water level reached 0.9 m (3 ft) above the top of the spent fuel (NRC 2001b).

As the comments point out, restricted airflow prevents the development of natural circulation airflow patterns that would otherwise provide convective heat removal and, thus, remove decay heat from the fuel assemblies. It can also create an environment where hydrogen may be generated (and later combusted) due to the oxidation of zircaloy cladding in steam. However, for the same reasons, partial draindown limits the amount of air that can reach the zircaloy

cladding and cause a zirconium-air oxidation reaction, which is more exothermic than the zirconium-steam oxidation reaction. At the very high temperatures associated with zirconium fires, the major source of heat is the exothermic oxidation of the zircaloy cladding, not decay heat (see Appendix 1.A of NUREG–1738 [NRC 2001b]). Figure 1A-2 of NUREG–1738 demonstrates the difference between air-cooled and adiabatic conditions for PWR fuel. In these calculations, adiabatic conditions means assuming that all decay heat generated in the spent fuel assemblies remains in the spent fuel assemblies, air does not take any heat away by convective heat removal and there is no radiation heat transfer. The adiabatic conditions in these calculations also assumed that no heat is added by air oxidation of the cladding (i.e., oxidation heat source). The inclusion of the oxidation heat source in the air-cooled calculations showed that heatup times are shorter than the adiabatic calculations for times up to 2 years after shutdown. In addition, at these very high temperatures, the major heat removal mechanism is radiative heat transfer, not convective heat transfer. Generally speaking, a partial draindown resulting in a water level just above the rack baseplate is more challenging during fuel heatup, but a complete draindown is more challenging during a zirconium fire.

These phenomena can be observed from examination of some of the “small leak” cases studied in SECY-13-0112 (NRC 2013l). For the reasons stated above, some of the “small leak” cases studied in SECY-13-0112 could be more limiting than the partial draindown referred to by the comments, because the water drained at a rate where partially drained conditions were present during the fuel heatup, while fully drained conditions were present during the zirconium fire. This situation led to the largest radiological releases reported in that study. Nevertheless, the magnitude and timing of those radiological releases, as modeled in SECY-13-0112, were not significantly more severe than those estimated in the complete draindown situation in NUREG–1738 (NRC 2001b) (and other past studies), and in most cases examined were actually less severe. This is due to simplifying assumptions made in the past studies, which sought to conservatively account for uncertainties in un-modeled phenomena and variation among plants. In summary, the NRC agrees that partial draindown scenarios can be more challenging in certain respects. However, the NRC disagrees that the issue of partial draindown has not been addressed in the NRC’s analyses used to determine the potential environmental impacts of a severe accident in the GEIS.

The NRC disagrees that the referenced report by students at Pennsylvania State University supports the conclusion that a partial loss of spent fuel pool coolant is more likely. That report attempts to validate spent fuel pool bundle heatup modeling in TRACE and makes no statement on the likelihood of a partial loss-of-coolant accident. No changes were made to the GEIS or Rule as a result of these comments.

(2-7) (245-13-4) (336-11) (377-6-4) (463-1-7) (463-1-8) (552-2-30) (556-5-14) (916-2-7)

D.2.39.13 – COMMENT: A commenter stated that the NRC should have considered a scenario in which a station blackout leads to a spent fuel pool fire. In support of this position, the

commenter pointed to a 2011 report from the office of then-Congressman Edward J. Markey, concluding that backup power supplies are not required if the reactor core is defueled. The commenter then stated that the time before the water in the spent fuel pool would heat up and boiloff would vary based on the amount of spent fuel offloaded and the time since shutdown before the spent fuel is transferred to the spent fuel pool. The commenter then asserted that once boiloff commenced, a boiloff accident would be similar to a partial draining of the spent fuel pool, in that airflow would be blocked, leading to a heatup of the spent fuel assemblies and eventual ignition. The commenter further stated that as water level in the spent fuel pool boiled off, mitigative actions by plant personnel (e.g., installing hoses for spray) could be precluded by the increase in temperature and radiation levels.

RESPONSE: The NRC agrees in part and disagrees in part with these comments. The NRC recognizes that slow boiloff events can lead to an accident progression qualitatively similar to a partial draindown or slow draindown as discussed in Section D.2.39.12 of this appendix. The NRC also recognizes that the likelihood of boiloff events is different from the events initiated by a pool drainage because, in general, pool draindowns would be caused by structural failure of the pool and liner and boiloff events result from loss of pool cooling resulting in loss of water from boiling rather than drainage. NUREG–1738 (NRC 2001b) found that, given the industry decommissioning commitments and staff decommissioning assumptions, the likelihood of boiloffs from all causes was comparable to the likelihood of fuel uncovery from a cask drop or the likelihood of a seismically induced pool failure based on the EPRI seismic hazard estimates, and approximately an order of magnitude lower than the likelihood of a seismically induced pool failure based on the Lawrence Livermore National Laboratory seismic hazard estimates. However, as the comments note, the time before the water in the spent fuel pool would heat up and boiloff would vary based on the decay power of the spent fuel in the pool. As the short-term timeframe considered in this GEIS can last for up to 60 years after the licensed life for operations, the drop in decay power of the fuel would lead to a boiloff scenario that proceeds increasingly slowly with the passage of time. In general, the decay power is dominated by the most recently discharged fuel, as can be seen in comparison of a high- and low-density pool in Section 6.3.1 in SECY-13-0112 (NRC 2013l). The effect of the reduced decay power in increasing the time available for pool recovery is demonstrated in Table 2.1 of NUREG–1738 (NRC 2001b), which shows that the time until fuel uncovery ranges from at least 4 days at 60 days following shutdown to more than 22 days at 10 years following shutdown. As the spent fuel continues to cool following the permanent cessation of operation, the increasingly slow rate of boiloff that results renders pool recovery increasingly likely with the passage of time. The NRC agrees with the comments that the environment near a pool undergoing boiloff would make pool recovery challenging; however, since the pool is an unpressurized system, the water level can be recovered with fairly simple systems, and in contrast to large pool leaks resulting from structural failure of the spent fuel pool, large volumes of water would not be needed to make up for boiloff losses. In addition, the agency has implemented regulatory requirements at operating reactors to ensure proper heat-load management within the spent fuel pool, as part of

the agency's post-September 11, 2001 actions, later codified in 10 CFR 50.54(hh)(2). While the requirements of 10 CFR 50.54(hh)(2) are not applicable for spent fuel pools at decommissioning reactors, the NRC is considering implementing similar requirements for decommissioning facilities as part of its Station Blackout Mitigation rulemaking (rulemaking docket NRC-2011-0299, 77 FR 16175). Although the requirements of 10 CFR 50.54(hh)(2) do not currently apply for licensees of decommissioning facilities, many operating reactors licenses have license conditions that effectively require the same capabilities. Those conditions would remain in place after shutdown.

The NRC has supplemented Appendix F with additional discussion of the potential for boiloff of the spent fuel pool during the short-term timeframe. No changes were made to the Rule as a result of this comment.

(463-1-11) (463-1-14) (463-1-15) (463-1-16) (463-1-17) (463-1-19) (463-1-20) (463-1-21) (463-1-22) (463-1-5) (463-1-9)

D.2.39.14 – COMMENT: One commenter stated that the GEIS does not address the plan, or lack thereof, of how to control a spent fuel pool fire. The commenter states that plans that include using fire hoses to cool the spent fuel in the pool will not work.

RESPONSE: The NRC disagrees with this comment. A discussion of how to control a spent fuel pool fire is not relevant to the GEIS because the evaluation in the GEIS does not rely upon licensee action to control a spent fuel pool fire. Rather, the GEIS assumes, for the purpose of analysis, that a spent fuel pool fire does occur and offers an analysis of the consequences. Nonetheless, as stated in the GEIS, the NRC has found that mitigating strategies described in Section F.1.2 of the GEIS are effective strategies to prevent a spent fuel pool fire. As part of its ongoing Station Blackout Mitigation rulemaking, the NRC is considering requiring licensees of decommissioning reactors to develop strategies to prevent or mitigate the consequences of a loss of spent fuel pool cooling. Additional information on this rulemaking can be found at www.regulation.gov by searching docket number NRC-2011-0299 (77 FR 16175). No changes were made to the GEIS or Rule as a result of this comment.

(611-44)

D.2.39.15 – COMMENT: The NRC received several comments on the issue of how long spent fuel needs to cool in the pool before it is air-coolable. Some commenters stated that spent fuel is only susceptible to ignition in the event of a loss of water in the spent fuel pool for four months after the spent fuel is removed from the reactor, with one commenter citing the analysis in SECY-13-0112 as support for the comment. Another commenter noted that in the event of a partial draining of the spent fuel pool, airflow would be impeded, which would increase the time until the spent fuel is air-coolable. The commenter noted that SECY-13-0112 stated that spent fuel would be air-coolable after 73 days in the event of a complete loss of water, but was

assumed to not be air-coolable in the event of a partial drain of a spent fuel pool for up to 2 years after removal from the reactor. One commenter stated that even fuel older than the NRC has previously considered susceptible to ignition could ignite in the case of a partial draining of the spent fuel pool.

RESPONSE: The NRC agrees in part and disagrees in part with these comments. The NRC recognizes that the spent fuel is only susceptible to ignition (i.e., runaway oxidation reaction) if the fuel is not air-coolable in the event of water loss. The NRC agrees that there may be scenarios where the fuel is air-coolable. For example, for the specific conditions analyzed in SECY-13-0112 (NRC 2013l) (which are not generically applicable), the NRC found that the fuel was air-coolable (defined in that study as no runaway oxidation reaction [i.e., "fire"] within 72 hours) at about 2 months after reactor shutdown. As the short-term timeframe considered in this GEIS can last for up to 60 years after final shutdown, the drop in decay power of the fuel makes air-coolability increasingly likely with the passage of time in the event of a complete loss of water. However, as discussed in Section D.2.39.12 of this appendix, the effect of partial draindowns that restrict airflow can result in degraded air cooling. As discussed in NUREG–1738 (NRC 2001b), a criterion of "sufficient cooling to preclude a fire" has not been defined on a generic basis, although the NRC notes that it may be possible to define such a time based on a site-specific analysis. NUREG–1738, and by extension the GEIS, therefore assumed that a fire would be initiated if the water level reached 0.9 m (3 ft) from the top of the spent fuel. The quantitative impact estimates in Appendix F are based on this assumption, with the range of quantitative impact estimates based on decay times of anywhere from 30 days to 10 years after final shutdown. The NRC has updated the discussion in Appendix F to include more discussion of the potential for coolability of the spent fuel pool during the short-term storage period.

For beyond-design basis draindown events leading to complete drainage of the spent fuel pool in a relatively fast (e.g., hours) timeframe, the NRC expects (provided that adequate heat-load management practices are in effect), that the fuel in the pool can be air-coolable in a matter of months, or less. In this context, the term air-coolable describes the situation in which decay heat relative to passive heat removal mechanisms will not be capable of increasing the fuel's temperature to the point that a runaway oxidation reaction can lead to a spent fuel pool zirconium fire. This analysis takes into account the regulatory requirements in place at operating reactors to ensure proper heat-load management within the spent fuel pool, as part of the agency's post-September 11, 2001 actions, later codified in 10 CFR 50.54(hh)(2). While the requirements of 10 CFR 50.54(hh)(2) are not applicable for spent fuel pools at decommissioning reactors, the NRC is considering implementing similar requirements for decommissioning facilities as part of its Station Blackout Mitigation rulemaking. Additional information on this rulemaking can be found at www.regulations.gov by searching docket number NRC-2011-0299. Although the requirements of 10 CFR 50.54(hh)(2) do not currently apply for licensees of decommissioning facilities, many operating reactors licenses have license conditions that effectively require the same capabilities. Those conditions would remain in place after shutdown.

Alternately, as discussed further in Section D.2.39.12 of this appendix, much longer timeframes may be required to reach the point of passive coolability for partial draindown events that partially uncover the fuel, leading to a quasi-static water level above the spent fuel pool rack baseplate, but below the point at which adequate steam cooling occurs (a point sometimes attributed to roughly one-half of the fuel's height for spent fuel pool applications). It is also important to note that once a zirconium fire is initiated, it is likely to "propagate," meaning that the rate of heat addition to surrounding assemblies from radiative heat transfer (relative to the heat removal mechanisms in play) may cause those assemblies to heat up to the point where a runaway oxidation reaction is possible. Nevertheless, the magnitude and timing of those radiological releases, as discussed in Section D.2.39.12 of this appendix, were not significantly more severe than those estimated in the complete draindown situation in NUREG–1738 (NRC 2001b) (and other past studies) and in most cases examined were actually less severe. This is due to simplifying assumptions made in the past studies, which sought to conservatively account for uncertainties in un-modeled phenomena and variation among plants. In summary, the NRC continues to believe that the use of the quantitative results from NUREG–1738 are reasonable and adequate for the GEIS because those results are based on analyses that assume that a large radiological release will occur if the water drops to 0.9 m (3 ft) above the top of the fuel in the pool, thereby encompassing the effect of air-coolability, or the lack thereof, on estimates of environmental impacts from fires in spent fuel pools.

The NRC has supplemented Appendix F with additional discussion of the potential for coolability of the spent fuel pool during the short-term timeframe. No changes were made to the Rule as a result of these comments.

(30-6-5) (112-25-6) (463-1-10) (463-1-18) (711-32) (916-2-8) (942-13)

D.2.39.16 – COMMENT: A commenter stated that the NRC failed to consider, as part of its evaluation of spent fuel pool fires, how fuel fragmentation, relocation, and dispersal would affect the progression of an accident in the spent fuel pool. Citing several studies, the commenter stated that fuel fragmentation and relocation start early during the life of a fuel rod in the reactor core. The commenter further stated that there is a greater potential for fuel relocation in higher burnup fuel rods. The commenter claimed that fuel could relocate to areas of rod deformation and be dispersed in the event of a rod burst or rupture.

RESPONSE: The NRC agrees in part and disagrees in part with these comments. The NRC agrees that fuel fragmentation, relocation, and dispersal are not explicitly modeled in the spent fuel pool accident analyses upon which the GEIS is based. However, as discussed in Section D.2.39.18 of this appendix, the NRC continues to believe that the use of the quantitative results from NUREG–1738 (NRC 2001b) are reasonable and adequate for the GEIS because they are based on analyses that assume that a large radiological release will occur if the water drops to within 0.9 m (3 ft) of the fuel in the pool, thereby encompassing the effect of fuel fragmentation, relocation, and dispersal on estimates of environmental impacts from fires in spent fuel pools.

Although fuel dispersal is not explicitly modeled in the NRC's spent fuel pool accident analyses to date, its potential effects are reasonably understood and are not expected to have a significant effect on the characterization of spent fuel pool zirconium fires in the GEIS. Although these phenomena are encompassed by the analysis in the GEIS, the NRC is providing additional discussion below to help interested members of the public better understand these phenomena.

The immediate consequences of fuel dispersal are multiple. From a radiological standpoint, small, dispersed fuel particles could be entrained in the steam flow and cause a spread of radioactive particles away from the initial location of the damaged fuel assemblies (i.e., particle transport and possible aerosol transport). Particle dispersal also means the radionuclides are all transported in a similar manner—without regard to thermal or chemical volatility. From a thermal-hydraulic point of view, dispersed fuel changes the location of the source of heat. If dispersed fuel accumulates in one location, it can cause a large source of heat in a region that previously did not have one, or had a much smaller one. From a coolability point of view, dispersed fuel could create blockages in various areas in plant ventilation systems where it may be entrained. This is more likely with coarse particles than fine particles unless the latter agglomerate to form a particle bed. The extent to which the above phenomena can occur is under study, but is currently not known; nevertheless, it does not significantly change the NRC's understanding of spent fuel pool zirconium fires for the reasons described below.

For spent fuel pool accident analysis, the biggest expected effects are the characterization of gap release and the possibility of flow blockage at the top of the assembly. The term "gap release" refers to the release of radioactive material contained between the spent fuel cladding and the spent fuel pellets. The gap contains radioactive noble gas fission products and some volatile radionuclides. The amount of radioactive material in the gap is small compared to the amount in the fuel. The changes in offsite fission product release magnitudes from potential changes in the gap release would be small relative to the very large release magnitudes associated with a spent fuel pool zirconium fire. Separately, the NRC considered the effect of flow blockages at the top of fuel assemblies on the fuel heatup in a series of sensitivity calculations documented in Section 9.4 of SECY-13-0112 (NRC 2013l), where the NUREG assumed that a reactor accident leads to a hydrogen explosion in the reactor building and formation of debris on top of the assemblies (assumed reduced flow area of 50 percent, thus increasing flow resistance). Though not directly representing assembly-exit flow blockage due to fuel dispersal, this analysis shows that other phenomena, and uncertainties associated with those phenomena (e.g., ingress of cooler air earlier during the accident), have a much larger effect on the accident response than flow blockage. Flow blockage affects convective heat transfer, but not radiative heat transfer. If flow blockage due to fuel dispersal were to be more important than other phenomena, the main effect would be to prolong when air-coolability might prevent a zirconium fire, but not to change the radiological releases of a zirconium fire. This is because the dominant heat removal mechanism during a zirconium fire is radiative heat transfer, rather than the convective heat transfer that dominates at lower temperatures when the

fuel temperature is rising. Convective heat loses from the reaction zone are typically linearly dependent on temperature. At high temperatures in the reaction zone, the radiative losses are dependent on the fourth power of the surface temperature and, consequently, become much more efficient heat-loss processes. No changes were made to the GEIS or Rule as a result of these comments.

(706-7-1) (706-7-10) (706-7-11) (706-7-2) (706-7-3) (706-7-4) (706-7-5) (706-7-6) (706-7-7) (706-7-8) (706-7-9)

D.2.39.17 – COMMENT: A commenter stated that the NRC failed to account for other chemical reactions that could occur in a spent fuel pool fire. To support his claim, the commenter provided detailed technical discussions of the following chemical reactions:

- zirconium hydriding
- the boron carbide contained in the spent fuel racks
- chemical interactions between zirconium and Inconel at “low temperatures”
- chemical interactions between zircaloy and stainless steel at “low temperatures”
- molten core concrete interaction in spent fuel pool accidents

RESPONSE: The NRC agrees in part and disagrees in part with these comments. The NRC agrees that accident progression modeling involves a number of complex technical phenomena, and that there can be uncertainties associated with modeling these phenomena. The NRC recognizes that the phenomena discussed in the comments are important for the realistic evaluation of the initiation and progression of spent fuel pool fires. The NRC has considered many of these phenomena in recent studies (e.g., SECY-13-0112 [NRC 2013l]) and in the development of the MELCOR code, and continues to stay abreast of technical work conducted to examine these phenomena. However, as discussed in Section D.2.39.18 of this appendix, the NRC continues to believe that the use of the quantitative results from NUREG–1738 (NRC 2001b) are reasonable and adequate for the GEIS because they are based on analyses that assume that a large radiological release will occur if the water drops to within 0.9 m (3 ft) of the fuel in the pool, thereby encompassing the effect of these phenomena on estimates of environmental impacts from fires in spent fuel pools.

Although these phenomena will, therefore, not affect the impact estimates in the GEIS, the NRC is providing a summary of its technical perspectives on several of the phenomena raised in the comments. The NRC agrees that zirconium hydriding of spent fuel cladding (i.e., hydrogen pickup) would occur as a spent fuel pool fire begins. However, hydrogen captured on the cladding by this reaction will be released as the fuel cladding melts. The main impact of this phenomenon is related to predicting hydrogen release during tests. Further research could be performed to characterize these effects and their potential impacts, but the effort does not

appear to be justified at this time because under severe accident conditions zirconium oxidation and the associated heat release and hydrogen generation are the dominant phenomena. Modeling hydrogen pickup has not been necessary to predict hydrogen release during degradation of irradiation fuel in tests such as those in the Phébus-FP program. Other chemical reactions cited in the comments could be studied in more detail to investigate their impacts. Nevertheless, inclusion of these reaction models within MELCOR was not necessary to adequately reproduce the empirical results from the zirconium fire experiments (see NUREG/CR–7143, Lindgren and Durbin 2013). However, MELCOR does include a simplified boron carbide reaction model. Finally, as stated in the comments, molten core concrete interaction was considered in SECY-13-0112 (NRC 2013l) and the limitations associated with modeling of molten core concrete interaction in spent fuel pool were documented. No changes were made to the GEIS or Rule as a result of these comments.

(463-3-2) (463-3-3) (463-3-4) (463-3-5) (463-3-6)

D.2.39.18 – COMMENT: One commenter stated that the NRC did not address certain phenomena associated with zirconium fires in steam and air. To support this claim, the commenter provided detailed technical discussions of the following phenomena:

- in a spent fuel pool boiloff accident, a zirconium fire could ignite in steam if fuel-cladding temperatures reached 1,000°C (1,832°F)
- in a spent fuel pool boiloff accident, a zirconium fire might not ignite in steam if fuel- cladding temperatures reached 1,000°C (1,832°F) or greater
- the PHEBUS B9R test had a low initial heatup rate and a rapid fuel-cladding temperature escalation at relatively low temperatures
- in a spent fuel pool boiloff accident, a zirconium fire would most likely ignite in air if fuel-cladding temperatures reached 900°C (1,652°F) or lower
- exothermic reactions in air: zirconium oxidation and zirconium nitriding
- nitrogen accelerates the oxidation and degradation of zirconium fuel-cladding in air
- the axial and radial propagation of a spent fuel pool fire

RESPONSE: The NRC agrees in part and disagrees in part with these comments. The NRC recognizes that the phenomena discussed in the comments are important to realistically evaluate the initiation and progression of spent fuel pool fires. The NRC has considered many of these phenomena in the MELCOR code and in recent studies (e.g., SECY-13-0112 [NRC 2013l]). Based on current research, the NRC has concluded that it is reasonable to rely on the quantitative results from NUREG–1738 (NRC 2001b) for the GEIS because NUREG–1738 assumes that a large radiological release will occur if the water level drops to within 0.9 m (3 ft) of the fuel in the pool. This conservative assumption thereby encompasses the effect of the

spent fuel oxidation phenomena discussed in the comments on estimates of environmental impacts from fires in spent fuel pools. Section F.1.1 of the GEIS has been revised to discuss the factors that can influence the size of the radiological release.

As discussed in Section D.2.39.23 of this appendix, the evaluation of the likelihood and consequences of a spent fuel pool fire in the GEIS is based largely on NUREG–1738 (NRC 2001b). The phenomena identified in the comments are unlikely to result in releases that are faster or larger than those assumed for the analyses in NUREG–1738. To account for uncertainties of the type discussed by the comment, NUREG–1738 conservatively assumed that a fire would be initiated if the water level reached 0.9 m (3 ft) from the top of the spent fuel, and used the source terms from NUREG–1465 (NRC 1995) to evaluate consequences. As documented in Appendix 4B of NUREG–1738 (NRC 2001b), use of the NUREG–1465 source term means that the consequence estimates in the GEIS are based on a 75 percent release of radioiodine and radiocesium, the two radioisotope groups that contribute the most to offsite consequences. In addition, to address potential uncertainties in the source term, NUREG–1738 computed consequences for a modified source term that assumed a 75 percent release fraction for ruthenium and 3.5 percent release fractions for lanthanum and cerium. The consequences from such a release are provided in Appendix F of the GEIS. The NRC believes that the phenomena discussed in comments would not significantly affect the estimates in the GEIS because the estimates in the GEIS are based on analyses that assume that spent fuel oxidation and a large radiological release will occur if the water level drops to within 0.9 m (3 ft) of the fuel in the pool. Because of these conservative assumptions, the analyses in NUREG–1738 result in a faster and larger release than a more detailed model would predict.

Although these phenomena do not affect the impact estimates in the GEIS, the NRC has summarized below its technical perspectives on several of the phenomena raised in the comments. Many of the comments are related to details of the analyses conducted in SECY-13-0112 (NRC 2013l). As discussed above and in Section D.2.39.28 of this appendix, the GEIS is based on NUREG–1738 (NRC 2001b) rather than SECY-13-0112, and the specific details of the effect of these phenomena on the results of SECY-13-0112 are not addressed here.

Contrary to the assertions in the comments, there is not a specific temperature peculiar to zirconium alloy cladding at which self-sustaining oxidation (i.e., “zirconium fire”) occurs. A self-sustaining zirconium fire will develop if the heat-generation rate from reaction with oxidant exceeds the heat-loss rate (heat losses include both convective and radiative losses) from the reaction zone. Because both heat generation and heat losses increase with temperature, no specific temperature defines whether a zirconium fire will occur.

Although the phenomena of zirconium nitriding was not explicitly modeled in the NRC’s spent fuel pool fires analysis, the NRC believes such a model is not necessary for the purposes of this evaluation. Nitriding refers to the formation of zirconium nitride (ZrN) when zirconium cladding oxidizes at high temperatures in an air environment. As an additional heat source, nitriding is

only important in oxygen-starved situations, such as cases where the reactor building is intact during the zirconium fire. However, in such cases the releases are likely to be limited by the decontamination afforded by the intact reactor building, due to processes such as deposition and settling within the building before the radioactive aerosols are released into the environment. At higher oxygen potentials (e.g., in cases where the reactor building is not intact) the presence of any measurable amount of oxidant in the gas attacking the cladding is sufficient to prevent the formation of surface ZrN. Further, if ZrN does form it can be converted readily to ZrO_2 when exposed to oxidant. The heat generation from the reaction of cladding to form ZrN followed by oxidation of the ZrN to form ZrO_2 is essentially the same as the direct reaction of Zr to form ZrO_2. This last reaction is taken into account in accident analysis codes. Detailed modeling of the current understanding of the microscopic effects of nitriding is not needed for the GEIS because simple empirical kinetics are sufficient to account for the effects and there is a sufficient data base of these empirical kinetics. The empirical modeling data base includes a substantial body of information on the breakaway phenomenon mentioned in comments.

With respect to the findings in various tests cited in comments (i.e., CORA-16 or PHEBUS B9R), these phenomena are well understood and recognized in the formulations of models. With respect to zirconium fire propagation, the axial and radial heat transfer within fuel assemblies and between groups of fuel assemblies is modeled in severe accident codes (e.g., MELCOR) needed for accident progression analysis in a spent fuel pool. The code assessment against zirconium fire experiments conducted at Sandia National Laboratory and code-code comparison documented in NUREG/CR–7143 address fire propagation phenomena (Lindgren and Durbin 2013).

In summary, the NRC recognizes that the phenomena discussed in comments are important to realistically evaluate initiation and progression of spent fuel pool fires. The NRC has considered important phenomena in MELCOR and in recent studies (e.g., SECY-13-0112 [NRC 2013l]). Based on current research, the NRC has concluded that it is reasonable to rely on the quantitative results from NUREG–1738 (NRC 2001b) for the GEIS because NUREG–1738 assumes that a large radiological release will occur if the water level drops to within 0.9 m (3 ft) of the fuel in the pool. This conservative assumption thereby encompasses the spent fuel oxidation phenomena discussed in comments and would not substantively change the impact determinations in the GEIS. No changes were made to the Rule as a result of these comments.

(463-3-1) (463-2-11) (463-2-12) (463-2-13) (463-2-14) (463-2-15) (463-2-16) (463-2-17) (463-2-18) (463-2-19) (463-2-20) (463-2-21) (463-2-22) (463-2-23) (463-2-24) (463-2-25) (463-2-26) (463-2-27) (463-2-28) (463-2-29)

D.2.39.19 – COMMENT: One commenter stated that the NRC failed to consider how hydrogen combustion would affect the progression of a spent fuel pool accident in its analysis of the consequences of a spent fuel pool fire. Citing various studies, the commenter stated that a reactor accident that leads to a hydrogen explosion in the reactor building of a BWR with a Mark

I or II containment could hamper workers' efforts to mitigate accidents and potentially impede air cooling of the spent fuel in the event of loss of water in a spent fuel pool. Further, the commenter stated that a compromised reactor building could lead to an increase in zirconium oxidation due to an increase in oxygen in the reactor building, which would ultimately lead to an increased radiological release from a spent fuel pool fire. The commenter stated that MELCOR does not consider hydrogen explosions that could occur when hydrogen concentrations are less than 10 percent, even though a hydrogen explosion occurred at Three Mile Island Unit 2 when the hydrogen concentration in the containment was 8.1 percent. In addition, the commenter stated that even though spent fuel pools for PWRs and BWRs with Mark III containments are less susceptible to hydrogen explosions in the reactor building, they would still be susceptible in the event of a spent fuel pool fire, due to the large amounts of hydrogen that would be generated. The commenter stated that a hydrogen explosion under those circumstances would result in a release of radiation that could exceed the amount released during the Chernobyl accident.

RESPONSE: The NRC disagrees with these comments. The NRC acknowledges that uncertainties exist in accident progression modeling. However, in the risk-based analysis that the NRC performed for accidents in the GEIS, these uncertainties are relevant only to the extent that they affect the risk of a spent fuel pool fire, determined by the likelihood of a radiological release as well as its consequences. The GEIS is based largely on NUREG–1738 (NRC 2001b) for the evaluation of the likelihood and consequences of a spent pool fire. Because of the uncertainties associated with modeling accident progression phenomena of the type discussed in the comments, NUREG–1738 assumed that a fire would be initiated if the water level reached 0.9 m (3 ft) from the top of the spent fuel, and used the source terms from NUREG–1465 (NRC 1995) to evaluate consequences. The NRC continues to believe that the use of the quantitative results from NUREG–1738 are reasonable and adequate for the GEIS because those results are based on analyses that assume that a large radiological release will occur if the water drops to 0.9 m (3 ft) above the top of the fuel in the pool, thereby encompassing the effect of hydrogen combustion on estimates of environmental impacts from fires in spent fuel pools.

Although the NRC has not, in preparing the GEIS, relied upon the analysis or findings in SECY-13-0112 (NRC 2013l), the NRC has verified that SECY-13-0112 does not contradict the impact determinations in the GEIS. SECY-13-0112 discusses the impact that a hydrogen combustion event could have on onsite accident management activities (e.g., Section 5.3.2 in SECY-13-0112), and (1) specifically analyzes cases where onsite accident management is unsuccessful at mitigating the accident, (2) explores the potential for damage to the spent fuel pool if a hydrogen combustion event caused by a concurrent reactor accident occurs (Section 9.4), and (3) explores the uncertainty in MELCOR's hydrogen combustion modeling (Section 9.1) (NRC 2013l). Some of the scenarios studied in SECY-13-0112 do lead to very large radiological releases due to hydrogen combustion events damaging the reactor building and creating additional air ingress. Nevertheless, the magnitude and timing of those radiological releases, as

modeled in SECY-13-0112, were not significantly more severe than those estimated in the complete draindown situation in NUREG–1738 (NRC 2001b) (and other past studies), and in most cases were actually less severe. This is because earlier studies used simplifying assumptions to conservatively account for uncertainties in un-modeled phenomena and variation among plants. No changes were made to the GEIS or Rule as a result of these comments.

(706-7-12) (706-7-13) (706-7-14) (706-7-15) (706-7-16) (706-7-17) (706-7-18) (706-7-19) (706-7-20) (706-7-21)

D.2.39.20 – COMMENT: One commenter suggested that the NRC's evaluation of spent fuel pool fires is deficient because the NRC should have examined "alloying, accidental alloying, or alloying at the surface" of zirconium cladding as a condition in which zirconium could begin reacting with oxygen and air at a much faster rate. The commenter also suggested that this "higher rate of fire" may have occurred during the Fukushima accident.

RESPONSE: The NRC disagrees that the GEIS should have considered an accident caused by unspecified "alloying" phenomena. The NRC is not aware of any alloying phenomena that would occur as a result of draining a spent fuel pool and exposing spent fuel to air. The phenomena considered in the GEIS is rapid oxidation of zirconium cladding in air, which is referred to as a spent fuel pool fire. There was no spent fuel pool fire during the Fukushima Dai-ichi accident in March 2011. No changes were made to the GEIS or Rule as a result of this comment.

(30-14-4)

D.2.39.21 – COMMENT: Several commenters stated that the risk of spent fuel fires is demonstrated by the events at the Fukushima Dai-ichi facility in Japan following the 2011 earthquake and tsunami.

RESPONSE: The NRC disagrees with these comments. The accidents at Fukushima resulted in extensive damage to the reactors, but did not result in spent fuel pool fires. As discussed in Appendix F of the GEIS, analyses and inspections performed subsequent to the Fukushima Dai-ichi accident confirmed that all of the spent fuel pools remained structurally intact without a significant loss of water. Further, the water volume in the spent fuel pools was sufficient to maintain the temperature of the spent fuel, despite the loss of spent fuel cooling for several days. Thus, the substantial release of radioactive material from the Fukushima Dai-ichi reactors resulted from severe accidents involving the reactors, rather than a fire in one or more of the spent fuel pools. Accordingly, the accident analysis in the GEIS was not changed as a result of the Fukushima Dai-ichi accident. While the accident at Fukushima did not result in a spent fuel pool fire, the NRC has taken significant action to enhance the safety of reactors in the United States based on the lessons learned from that accident. Additional information on the NRC's

response to the accident at Fukushima can be found in Section D.2.52.2 of this appendix. No changes were made to the GEIS or Rule as a result of these comments.

(30-2-7) (48-1) (447-1-17) (622-4-11) (634-1) (916-2-23)

D.2.39.22 – COMMENT: Several commenters stated that the NRC improperly accounted for the successful evacuation of the surrounding population in its evaluation of the consequences of a spent fuel pool fire. Specifically, commenters noted that exemptions to emergency planning requirements have historically been granted within 12 to 18 months after final reactor shutdown. The commenters asked how populations can be evacuated if emergency planning requirements are dismantled.

RESPONSE: The NRC disagrees with the comments. The evaluation of spent fuel pool fires in the GEIS did not improperly credit a successful evacuation. As described in Appendix F, the consequence values presented in Table F-1 represent the late evacuation (i.e., an evacuation that is not complete before the postulated release occurs) of 95 percent of the population within 16 km (10 mi). The value of 95 percent of the population evacuating was used in the NUREG–1738 (NRC 2001b) analyses to address concerns that the fraction of the population that does not evacuate in an event could be higher. The use of the 95 percent estimate differs from the NRC's best estimate of 99.5 percent within 16 km (10 mi). The inclusion of the late-evacuation consequences represents the potential consequences from an event occurring early in the short-term timeframe, when the time-to-release would be at its shortest. While the NRC has not made a generic determination as to how long after the fuel has been removed from the reactor until the time-to-release would be long enough to allow for an evacuation, this transition would occur relatively early in the short-term timeframe. This is because time-to-release is directly related to the decay heat generated by the spent fuel, which decreases significantly as the time since its removal from the reactor increases. As a result, the use of values in Table F-2 that assume a late evacuation of 95 percent of the population represents a reasonable representation of the consequences that could occur in the event of a spent fuel pool fire in the short-term timeframe.

For the NRC's response concerning the granting of exemptions to emergency planning requirements, see Section D.2.44.3 of this appendix. The NRC's site-specific process for granting exemptions from emergency planning requirements described in Section D.2.44.3 of this appendix is appropriately reflected in the consequence results presented in Appendix F of the GEIS. This is because the assumption of a late evacuation of 95 percent of the population is consistent with the lack of a pre-planned emergency plan and the use of ad hoc measures. No changes were made to the GEIS or Rule as a result of these comments.

(2-6) (336-10) (377-6-2) (410-9) (412-1) (552-2-4) (556-5-15) (556-5-16) (700-5) (819-10)

D.2.39.23 – COMMENT: Several commenters stated that the NRC relied heavily on NUREG–1738 in its evaluation of spent fuel pool fires in the GEIS, without acknowledging or addressing the limitations of NUREG–1738. The commenters pointed to various statements in NUREG–1738 indicating that certain assumptions may or should be validated on a site-specific basis to argue that the NRC should perform site-specific reviews. Issues the commenters identified included the contribution of seismic events to loss of offsite power and internal fire frequencies, calculation of failure frequencies for non-single failure-proof crane systems, and the possibility of air cooling in the event of a loss of power caused by a severe weather event. One commenter stated that the NRC needs to provide additional information in Appendix F of the GEIS to identify spent fuel pools that do not meet an assumption or condition included in the GEIS, or its supporting documents, as well as information related to risk and measures to reduce risk. Specifically, the commenter noted that the plants that have the highest and lowest seismic risk were not identified in the range of seismic risk that was discussed in NUREG–1738. In addition, the commenter noted that the GEIS does not discuss differences in population density between sites, or calculate the effect those differences would have on the consequence calculations. The commenter also stated that the NRC should identify the changes that have been implemented since the September 11, 2001 terrorist attacks and the Fukushima Dai-ichi accident, quantify the reduction in risk that has been achieved by each change, and identify which reactor plants have implemented those measures.

Commenters also questioned the validity of the Industry Decommissioning Commitments and Staff Decommissioning Assumptions identified in NUREG–1738, both generally and specifically for spent fuel pool drainage pathways. For all issues identified, the commenters stated that the NRC should provide additional information. For the Industry Decommissioning Commitments and Staff Decommissioning Assumptions, the commenters stated that a list of reactor plants that do not meet the criteria outlined in NUREG–1738 should be included, as should a discussion of the consequences of not meeting those criteria.

RESPONSE: The NRC agrees in part and disagrees in part with these comments. The NRC chose to develop its generic analysis for spent fuel pool fires by selecting NUREG–1738 (NRC 2001b) as the principle basis for its quantitative estimates of the impacts, and then discuss any significant uncertainties and how these uncertainties would affect those estimates. The NRC chose NUREG–1738 for this purpose in the GEIS because the following features are particularly relevant to the spent fuel pool severe accident analysis of the GEIS:

- NUREG–1738 was developed for reactors during decommissioning rather than operating reactors, and thus analyzes the earliest and highest-risk period of the short-term timeframe considered in the GEIS.
- NUREG–1738 analyzes a wide variety of initiating events.
- NUREG–1738 was developed as a generic analysis by, for example, considering geographic variation in seismic hazard (see Figure 3.2 of NUREG–1738) and by performing

sensitivity studies to examine the effects of variation in site-specific factors such as population density.

- NUREG–1738 references preceding studies of spent fuel pool risks and compares the results, thereby serving as a valuable update to earlier spent fuel pool risk studies.
- NUREG–1738 has received extensive peer technical review and public comment.
- NUREG–1738 provides quantitative estimates at a reference reactor site (i.e., Surry Power Station), for which information on the impacts of potential reactor accidents is also available, allowing a comparison of the impacts of potential pool and reactor accidents.

None of the more recent studies (e.g., the security studies or the spent fuel pool consequence study documented in SECY-13-0112 [NRC 2013l]) have these features needed to support a generic analysis of continued storage. However, the security studies and SECY-13-0112 were reviewed to ensure consistency with the analyses in NUREG–1738 and the GEIS, and to ensure that no new, significant information might call into question the determination of a SMALL impact in the GEIS. In addition, the NRC reviewed the analysis in COMSECY–13–0030 (NRC 2013n), which analyzed spent fuel pool fire risk to determine whether the NRC should conduct additional research on whether to require reactor licensees to accelerate transfer of older, colder spent fuel from the spent fuel pool to dry cask storage. Because COMSECY–13–0030 was drafted to satisfy a limited purpose, did not contain a NEPA analysis, and was not intended to satisfy the NRC's NEPA obligation, the results of the study are not an appropriate technical basis for the generic consequence analysis in Appendix F of this GEIS.

The values in NUREG–1738 (NRC 2001b), and by extension the GEIS, do not represent worst-case values. The impact determination for a spent fuel pool accident involves analysis of both likelihood and consequence, and factors at any particular plant may tend to increase or decrease either the likelihood or the consequences of a spent fuel pool fire. The NRC elected to provide the quantitative estimates from the reference plants in NUREG–1738 and NUREG–1353 (NRC 1989a), and then explain qualitatively the factors that may cause the risk to be lower or higher than the selected reference plants. For example, as several of the comments note, factors such as population density or amount of source term released will affect both health and economic impacts, as discussed in Section F.1.1 of the GEIS. The NRC agrees with the comments that additional discussion of the factors that may impact the consequences of a spent fuel pool fire is warranted and has updated the discussion in Appendix F to more clearly explain how the uncertainties in the analyses supporting Appendix F, and the variability among reactor sites, may affect the estimates of health and economic impacts presented in Tables F-1 and F-2. However, the NRC notes that many, but not all, of these variables (e.g., population density and per-capita wealth) would also affect the quantification of reactor accident impact similarly. As a result, the comparison of the impacts from a pool fire to a severe reactor accident used as the basis for the impact determination of SMALL is expected to remain valid.

The NRC disagrees with comments that question the generic validity of the industry decommissioning commitments and staff decommissioning assumptions in NUREG–1738 (NRC 2001b). The NRC agrees that the quantitative estimates in Tables F-1 and F-2 are dependent on the assumptions and commitments spelled out in NUREG–1738 being met, and has revised Appendix F to note this fact. As discussed in draft ISG NSIR/DPR-ISG-02 (NRC 2013t), a licensee must address industry decommissioning commitments and staff decommissioning assumptions in its FSAR before being granted an exemption from emergency planning requirements after shutdown (see Section D.2.44.3 of this appendix for additional discussion on exemptions from emergency planning requirements). While the ISG is not yet final, it explains how the NRC intends to approach these exemption requests. Because licensees have an incentive to request reductions from emergency planning requirements, it is reasonable to assume that the industry decommissioning commitments and staff decommissioning assumptions will be met during the period of continued storage.

Several comments questioned the basis for the frequency of fuel uncovery due to cask drops. Appendix 2C of NUREG–1738 (NRC 2001b) provides a detailed assessment of the likelihood of fuel uncovery at plants with single-failure-proof systems, and assumes (SDA#5) that plants without single-failure-proof systems would achieve accident frequencies comparable to single-failure-proof systems. This was based on an industry commitment (IDC#1) that future decommissioning plants will comply with Phases I and II of the NUREG–0612 (NRC 1980) guidelines, including performing a load drop analysis for plants that do not upgrade to single-failure-proof systems. The NRC recognizes that while the benefit of a load drop analysis may be significant, it is unquantified, as described in Appendix 2C. If a load drop analysis were not performed or acted upon, it could result in the probability of pool drainage due to cask drop being higher than, and therefore no longer bounded by, a seismic event. The consequences of fuel uncovery from either a cask drop or a seismic event could be comparable. The NRC believes that it is reasonable to use impact estimates based on these commitments and assumptions for a generic analysis, because the conditions needed to meet these commitments have been clearly identified and considered reasonable at the time that NUREG–1738 was published, and the NRC is not aware of any new information that would invalidate these assumptions. No changes were made to the Rule as a result of these comments.

(473-13-4) (718-4-1) (718-5-1) (718-3-11) (718-3-12) (718-1-14) (718-3-18) (718-4-18) (718-3-19) (718-4-2) (718-4-3) (718-4-4) (718-4-5) (718-5-5) (718-4-6) (718-5-6) (718-3-8) (718-5-8) (718-3-9)

D.2.39.24 – COMMENT: Several commenters stated that the MELCOR code, used by the NRC in modeling severe accidents, was deficient and could under-predict the severity of a spent fuel pool fire. The NRC is interpreting these comments to mean that the commenters believe that the GEIS is deficient because it relied on studies that used the MELCOR code. One commenter

provided detailed technical comments in the following subject areas related MELCOR to support the position:

- MELCOR does not model the exothermic zirconium-nitrogen reaction
- MELCOR does not model how nitrogen accelerates the oxidation and degradation of zirconium fuel-cladding in air
- The NRC's recent post-Fukushima MELCOR simulations are non-conservative
- Recent Sandia National Laboratory spent fuel pool accident experiments are unrealistic because they were conducted with clean, non-oxidized cladding

One commenter stated that MELCOR was not valid for modeling spent fuel pool fires because of the way it modeled heat transfer. Several commenters stated that MELCOR does not appropriately model spent fuel rod deformation and bursting that could occur in an accident scenario, which, they state, could accelerate the rate of zirconium oxidation. One commenter pointed to experimental data that seemed to indicate that MELCOR under-predicts the zirconium-steam reaction rates that would occur in a spent fuel pool accident. Specifically, the commenter pointed to studies that indicated that (1) oxidation models are not able to predict the fuel-cladding temperature escalation that commenced at "low temperatures" in the PHEBUS B9R test and (2) "low temperature" oxidation rates are under-predicted for the CORA-16 experiment. One commenter was doubtful that MELCOR "simulates how local heavy oxide and/or crud layers would partly impede the local steam or air 'coolant' flow through the spent fuel assemblies in a spent fuel pool boiloff accident or complete spent fuel pool LOCA [loss-of-cooling accident], respectively." One commenter stated that MELCOR failed to account for phenomena such as zirconium hydriding.

RESPONSE: The NRC disagrees with these comments. The quantitative estimates in the GEIS are not based on MELCOR analyses, although the results of the more recent studies conducted using MELCOR are consistent with the earlier studies discussed in NUREG–1738 (2001b). The NRC recognizes that the phenomena discussed in comments are important for the realistic evaluation of the initiation and progression of spent fuel pool fires. The NRC has considered many of these phenomena in recent studies, such as SECY-13-0112 (NRC 2013l) and in the development of the MELCOR code, and continues to stay abreast of technical work conducted to examine such phenomena. However, the NRC continues to believe that the use of the quantitative results from NUREG–1738 are reasonable and adequate for the GEIS because they are based on analyses that assume that a large radiological release will occur if the water drops to 0.9 m (3 ft) above the top of the fuel in the pool, thereby encompassing the effect of these phenomena on estimates of environmental impacts from fires in spent fuel pools.

Neither the MELCOR code, nor the recent Sandia National Laboratory spent fuel pool accident experiments were used to estimate the impacts documented in the GEIS. The NRC believes

that the topics identified in comments would not significantly affect the quantitative estimates in the GEIS because they are based on NUREG–1738 (NRC 2001b). Because of the uncertainties associated with modeling accident progression phenomena of the type discussed in comments, NUREG–1738 assumed that a fire would be initiated if the water level reached 0.9 m (3 ft) from the top of the spent fuel, and used the source terms from NUREG–1465 (NRC 1995) to evaluate consequences. During the preparation of SECY-13-0112 (NRC 2013l), NRC reviewed the ongoing work to determine whether there would be significant new information that could affect the conclusions in the GEIS. Appendix F has been updated to discuss how the results of SECY-13-0112 are relevant to the evaluation of the environmental impacts from spent fuel pool fires in the GEIS. Because these results are consistent with earlier studies, NRC concludes that it is reasonable that the finding of SMALL environmental impacts remains valid due to the low frequency of these events, despite their potentially large consequences.

Although the comments related to the use of MELCOR and SECY-13-0112 (NRC 2013l) are outside the scope of the analysis in the GEIS and Rule, the NRC is providing this discussion to respond to some of the concerns raised by comments regarding MELCOR and SECY-13-0112. MELCOR is the NRC's best-estimate tool for severe accidents analysis and has been validated against experimental data. No intentional conservatism was introduced in the MELCOR accident progression analysis in SECY-13-0112. SECY-13-0112 contained many sensitivity calculations where there are uncertainties in some model parameters (e.g., hydrogen combustion). The development of the MELCOR models for SECY-13-0112 was based on validation of MELCOR against the BWR zirconium fire experiments as documented in NUREG/CR–7143 (Lindgren and Durbin 2013). Detailed explanations on the basis of the SECY-13-0112 MELCOR models are provided in Appendix E of that study. The Sandia zirconium fire experiments were integral tests that not only took advantage of the new air-oxidation modeling in MELCOR that was required for correct prediction of the onset of ignition, but also looked at other important phenomena including the hydraulic resistance of fuel assemblies, the effect of oxide layer thickness on surface emissivity, and radiation heat transfer between fuel rods and, radially, between fuel assemblies across the rack. No changes were made to the GEIS or Rule as a result of these comments.

(463-3-10) (463-3-11) (463-3-12) (463-3-13) (463-3-14) (463-3-15) (463-3-16) (463-3-17) (463-3-18) (463-3-19) (463-3-20) (463-3-21) (463-3-22) (463-3-23) (463-3-24) (463-3-25) (463-3-26) (463-3-7) (463-3-8) (463-3-9) (556-2-23) (556-4-7) (706-6-1) (706-6-10) (706-6-11) (706-6-12) (706-6-13) (706-6-14) (706-5-15) (706-6-15) (706-6-16) (706-6-2) (706-6-3) (706-6-4) (706-6-5) (706-6-6) (706-6-7) (706-6-8) (706-6-9) (916-2-14) (916-2-15) (916-2-16)

D.2.39.25 – COMMENT: A commenter stated that the analysis of spent fuel pool fires in Appendix F of the GEIS does not comply with NEPA because many operators of reactor plants have not submitted license amendment requests to adopt National Fire Protection Association Standard 805, *Performance-Based Standard for Fire Protection for Light Water Reactor Electric*

Generating Plants. The commenter stated that the use of probabilistic fire-protection analysis is not allowed without a license amendment and associated opportunity for hearing.

RESPONSE: The NRC disagrees with the comment. NRC regulations at 10 CFR 50.48(c) allow licensees to adopt the performance-based fire-protection programs based on the National Fire Protection Association Standard 805 (NFPA 2009). Adoption of this standard is voluntary and licensees may choose to maintain existing fire-protection programs based on the deterministic requirements against which the plant was originally licensed. As part of implementing a performance-based fire-protection program, a licensee would develop a probabilistic risk assessment tailored to gain risk information relevant to its fire-protection program. The evaluation of spent fuel pool fires in Appendix F cannot be used as the basis for implementing fire-protection programs compliant with 10 CFR 50.48(c), which can only be done through a site-specific license amendment. No similar license amendment is required for the NRC's evaluation of spent fuel pool fires during the short-term timeframe. Further, the voluntary implementation of a fire-protection program based on National Fire Protection Association Standard 805 would not have a significant impact on the results of the evaluation and is not required under NEPA. No changes were made to the GEIS or Rule as a result of this comment.

(611-39)

D.2.39.26 – COMMENT: Several commenters stated their agreement with a 2003 paper, "Reducing the Hazards from Stored Spent Power-Reactor Fuel in the United States," (Alvarez et al. 2003), which examined risks associated with spent fuel pools and was co-authored by Chairman Macfarlane. Commenters supported the paper's recommendation of requiring the expedited transfer of spent fuel from spent fuel pools to dry casks.

RESPONSE: The NRC reviewed and responded to the 2003 paper at the time it was published. In a fact sheet detailing its response, the NRC stated that:

"In summary, we conclude that the authors' assessment of possible spent fuel pool accidents stemming from potential terrorist attacks does not address such events in a realistic manner. In many cases, the authors rely on studies that made overly conservative assumptions or were based on simplified and very conservative models. The use of these previous studies, most of them NRC or NRC contractor studies, provides overly conservative and misleading results when assessing potential spent fuel pool vulnerabilities to terrorist events. The overall effect of the combined conservatisms in the four major areas discussed cumulatively affect the paper's cost-benefit calculations for its central recommendation by orders of magnitude. Given all of this, NRC does not believe that the fundamental recommendation of this paper, namely that all spent fuel more than five years old be placed in dry casks through a crash 10-year program costing many billions of dollars, is at all justified. Spent fuel stored, in both wet and dry storage configurations, is safe and measures are in place to adequately protect the public." (NRC 2003b).

For more discussion on the NRC's evaluation of the expedited transfer of spent fuel from pools, refer to response Section D.2.50.1 of this appendix. No changes were made to the GEIS or Rule as a result of these comments.

(30-2-8) (34-5) (163-7-8) (218-3) (281-1) (284-3) (611-41)

D.2.39.27 – COMMENT: A commenter expressed skepticism that studies performed at Sandia National Laboratory on behalf of the NRC, evaluating the effectiveness of reactor plant and spent fuel pool modifications in response to the September 11, 2001 terrorist attacks, supports the conclusions of the GEIS related to risk of spent fuel pool fires. In addition, the commenter stated that the NRC should have performed the Court of Appeals-ordered analysis of the consequences of a spent fuel pool fire. Another commenter expressed concern that the NRC cannot provide a complete assessment of Waste Confidence because the public and other agencies do not have access to the classified Sandia studies.

RESPONSE: The NRC disagrees that the Sandia studies do not support the NRC's conclusions in Appendix F of the GEIS. As described in NRC's 2008 Denial of Petitions for Rulemaking (73 FR 46204), the Sandia studies concluded that the risk of spent fuel pool fires is likely lower than previously believed (e.g., in NUREG–1738 [NRC 2001b]). Because the information contained in the Sandia studies is security-related, the studies are not publicly available. While the NRC strives to be as open as possible, the agency does not release information that could be used to plan or execute an attack against a facility.

The NRC disagrees with the implication that the evaluation in Appendix F does not address the Court of Appeals' ruling as to consequences of a spent fuel pool fire. The evaluation in Appendix F of the GEIS provides a clear and thorough discussion of the significant consequences that could occur in the event of an unmitigated spent fuel pool fire. No changes were made to the GEIS or Rule as a result of these comments.

(245-24-7) (552-3-5)

D.2.39.28 – COMMENT: Several commenters submitted comments detailing issues they believe were flaws in the analysis performed in the NRC's recently issued SECY-13-0112, *Consequence Study of a Beyond-Design-Basis Earthquake Affecting the Spent Fuel Pool for a U.S. Mark I Boiling Water Reactor*. One commenter expressed the opinion that the analysis in SECY-13-0112 should not be relied upon in the GEIS. The following reasons were cited by commenters to support their assertion that SECY-13-0112 is flawed:

- a lack of consideration of spent fuel pool geometry
- a lack of consideration of open-frame, low-density storage
- a lack of consideration of partial spent fuel pool drainage

- a lack of consideration of non-earthquake initiating events (e.g., aging, terrorist attack, and reactor accidents)
- the manner in which mitigating actions were considered
- an inadequate accident duration assumed in the model
- the use of the MELCOR code to model the accident

RESPONSE: The NRC agrees in part and disagrees in part with these comments. To the extent that comments suggest that SECY-13-0112 (NRC 2013l) should not be used to form the basis for the generic consideration of spent fuel pool fires in this GEIS, the NRC agrees. As described in Appendix F of the GEIS, "A significant portion of the NRC's analysis for spent fuel pool fires during the short-term storage timeframe is derived from NUREG–1738, *Technical Study of Spent Nuclear Fuel Pool Accident Risk at Decommissioning Nuclear Power Plants* (NRC 2001b). The reason for that choice is described in more detail in Section D.2.39.23 of this appendix. In contrast, SECY-13-0112 was developed as a detailed study of a single reference plant based on an existing reactor to determine whether accelerated transfer of older, colder spent fuel from the spent fuel pool at the reference plant to dry cask storage would significantly reduce risks to public health and safety. Although it was undertaken in the same timeframe as the GEIS, SECY-13-0112 was not developed to provide a technical basis for the GEIS. Responses to public comments on that study are provided in Appendix E of SECY-13-0112.

During the preparation of the GEIS, the NRC reviewed the ongoing research in SECY-13-0112 to determine whether it might affect the conclusions in the GEIS. As discussed in Chapter 10 of SECY-13-0112 (NRC 2013l), the results of that study yielded estimates of environmental impacts that were generally the same or less significant to public health and safety than impacts derived from earlier studies, including NUREG–1738 (NRC 2001b) and NUREG–1353 (NRC 1989a). Because the GEIS results are consistent with earlier studies, the NRC concludes that the GEIS finding of SMALL environmental impacts from spent fuel pool accidents is reasonable. These studies confirm, as the GEIS reflects, that spent fuel pool accidents are low-risk events due to the low likelihood of occurrence, despite their potentially significant consequences.

Several of the issues raised by comments with respect to SECY-13-0112 (NRC 2013l) were not within the scope of that study, but are addressed within the GEIS. For example, consideration of terrorism is not within the scope of SECY-13-0112. Chapter 10 states that "… staff focused on studies associated with accidents, rather than studies of safety consequences associated with deliberate human actions such as sabotage or terrorism". The GEIS acknowledges in Section 4.19.1 that the consequences of a spent fuel pool fire resulting from a terrorist attack could be high. However, due to the low likelihood of such events, the environmental impacts are projected to be SMALL. Also, the GEIS spent fuel pool fire risk analysis is based on NUREG–1738 (NRC 2001b), which explicitly evaluates a number of initiating events for which risks are not quantified in SECY-13-0112 (e.g., cask drops). In addition, as discussed in

Section D.2.39.12 of this appendix, the effects of partial draindown (i.e., restricted airflow) were addressed in NUREG–1738, which is the basis for the estimates of health impacts in Appendix F. Further, as discussed in Section D.2.39.23 of this appendix, Appendix F of the GEIS addresses the effect of changes in population density on health-impact estimates.

Conversely, several of the issues raised by comments are within the scope of SECY-13-0112 (NRC 2013l), but not within the scope of the GEIS. For example, the GEIS does not examine alternatives associated with low-density storage of spent fuel at operating reactor sites, as was done in SECY-13-0112 or COMSECY–13–0030 (NRC 2013n). Likewise, the effect of concurrent reactor accidents, which is relevant to analyses of spent fuel pool fires at operating reactors as analyzed in SECY-13-0112, is considerably less significant to continuing storage impact analysis at permanently shutdown reactors. Concurrent reactor accidents are theoretically possible very shortly after final shutdown before removal of spent fuel, or at multi-unit sites with decommissioning and operating units, but the NRC believes that the interactions between the reactor and the spent fuel pool described by the comments are less likely at locations covered by the scope of the GEIS than at an operating reactor's spent fuel pool.

Appendix F has been updated to include information from SECY-13-0112 (NRC 2013l) and COMSECY–13–0030 (NRC 2013d) relevant to the issues raised in comments and to demonstrate the relationship between these more recent studies and the earlier studies on which the conclusions of the GEIS are based. No changes were made to the Rule as a result of these comments.

(112-3-4) (112-3-5) (281-2) (281-3) (552-2-20) (552-2-21) (552-2-22) (552-2-23) (552-2-26) (556-4-1) (556-4-10) (556-4-2) (556-4-4) (556-4-6) (916-2-12)

D.2.39.29 – COMMENT: Several commenters stated that the NRC should update the GEIS to reference SECY-13-0112, *Consequence Study of a Beyond-Design-Basis Earthquake Affecting the Spent Fuel Pool for a U.S. Mark I Boiling Water Reactor* (NRC 2013l), that was issued April 2014. Commenters stated that SECY-13-0112 provides additional support for the NRC's determination that the probability-weighted consequences of a spent fuel pool fire in the short-term timeframe would be SMALL. Some of the commenters indicated that the discussion in SECY-13-0112 regarding the length of time spent fuel is susceptible to fire after it has been removed from the core is relevant to the GEIS. One commenter, an NRC licensee, stated the belief that the NRC's findings in the GEIS related to spent fuel pool fires are applicable to the licensee's plants.

RESPONSE: The NRC agrees with the comments that SECY-13-0112 (NRC 2013l) should be referenced in the GEIS. In addition, the NRC agrees that the findings in the GEIS are valid for future licensing actions at the referenced facilities, and all other licensed facilities. For additional discussion as to how SECY-13-0112 was considered in the context of the GEIS, see Section D.2.39.28 of this appendix. For additional discussion on how long spent fuel is

susceptible to ignition (i.e., runaway oxidation reaction), see Section D.2.39.15 of this appendix. No changes were made to the GEIS or Rule as a result of these comments.

(694-3-17) (697-3-4) (827-2-15)

D.2.39.30 – COMMENT: Three commenters identified issues pertaining to COMSECY–13–0030. One commenter stated that the NRC has decided that "population density is not a variable that can significantly affect consequence calculation results." One commenter stated that the NRC seeks to "close off any further inquiry into the risk of a pool fire" through COMSECY–13–0030. One commenter stated that COMSECY–13–0030, and the study on which it was based, SECY-13-0112, was deficient because it was based on a site with a reactor "whose characteristics and surrounding demographics are considerably less likely to produce large accident consequences than many other reactors." The commenter further stated that the NRC did not consider malevolent events, the probability of which the commenter stated could not be calculated. Finally, the commenter stated that the NRC ignored "the many unique, site-specific and as-yet-unevaluated problems created by the use of high-burnup fuel in reactors," citing an increased chance of accidents and "increased chance of structural failure of the fuel rods such that transfer to dry casks is more difficult, more dangerous, and more expensive."

RESPONSE: The NRC disagrees with these comments. The NRC did not, in fact, rely on the analysis in COMSECY–13–0030 (NRC 2013n) as a primary basis for the findings in Appendix F. As described in Appendix F of the GEIS, "A significant portion of the NRC's analysis for spent fuel pool fires during the short-term storage timeframe is derived from NUREG–1738, *Technical Study of Spent Nuclear Fuel Pool Accident Risk at Decommissioning Nuclear Power Plants* (NRC 2001b)." The basis for that choice is described in more detail in Section D.2.39.23 of this appendix. COMSECY–13–0030, which was issued after the draft GEIS was prepared, analyzed spent fuel pool fire risk, to determine whether the NRC should conduct additional research on whether to require reactor licensees to accelerate transfer of older, colder spent fuel from the spent fuel pool to dry cask storage. As part of the preparation of this final GEIS, the NRC reviewed the analysis in COMSECY–13–0030 and determined that, because COMSECY–13–0030 was drafted to satisfy a limited purpose, did not contain a NEPA analysis, and was not intended to satisfy the NRC's NEPA obligations, the results of the study are not an appropriate technical basis for the generic consequence analysis in Appendix F of this GEIS.

To the extent that comments disagree with the findings in COMSECY–13–0030 (NRC 2013n), those comments are outside the scope of this GEIS. However, in response to these comments, information developed during the preparation of COMSECY–13–0030 has been used to supplement the discussion of spent fuel pool fires in Appendix F. Some examples include the range of population density surrounding U.S. nuclear power plants, as documented in Table 53 of COMSECY–13–0030, and the range of potential spent fuel pool radiological inventories, as documented in Tables 35 and 72 of COMSECY–13–0030. As discussed in Section D.2.39.23 of this appendix, the NRC has revised Appendix F in response to this and other comments to

discuss more extensively how variations in factors such as seismicity, spent fuel pool inventory, and population density across different geographic locations could affect public dose estimates. No changes were made to the Rule as a result of these comments.

(473-8-3) (473-8-4) (473-8-5) (718-4-11) (916-2-11)

D.2.39.31 – COMMENT: A commenter stated that the NRC did not consider a number of phenomena that would increase the probability of a spent fuel pool fire in the event of (1) a complete loss-of-coolant accident, (2) a partial loss-of-coolant accident, or (3) a spent fuel pool boiloff accident. The commenter pointed to additional comments included as an attachment that provided more detailed explanations of these topics.

RESPONSE: The comments refer to additional comments that were submitted as attachments. For responses to the specific issues raised in those comments, see Sections D.2.39.13, D.2.39.17, D.2.39.18, D.2.39.19, and D.2.39.24 of this appendix. No changes were made to the GEIS or Rule as a result of these comments.

(706-4-14) (706-3-20) (706-5-7)

D.2.39.32 – COMMENT: Several commenters expressed dissatisfaction with the studies referenced in Appendix F of the GEIS. Some commenters stated their opinion that one or more of the studies the NRC referenced were old or outdated. One commenter noted that the studies referenced did not incorporate lessons learned from the accidents at Fukushima, and suggested conducting both a new study that incorporates Fukushima lessons, and a risk analysis of pools containing uranium-plutonium MOX fuel rods. One commenter faulted the NRC for not including reports from independent, outside experts, including the 2003 report co-authored by Chairman Macfarlane and wondered whether NRC relied on secret studies of spent fuel fire risks (Alvarez et al. 2003). One commenter expressed concern that the NRC has not retracted or repudiated NUREG–1353 (NRC 1989a), specifically pointing to discussions on how long the fuel is susceptible to ignition and a failure to consider high-density storage racks. Two commenters noted that neither SECY-13-0112 (NRC 2013l) nor the related COMSECY–13–0030 (NRC 2013n), which evaluated expedited transfer of spent fuel, were referenced in the GEIS. One commenter went on to state that the coordination between staff discussed in COMSECY–13–0030 had a “substantial but undocumented influence on the draft GEIS.” Another commenter stated that the GEIS relied upon SECY-13-0112 and that the failure to explicitly reference SECY-13-0112 in the GEIS represented a violation of NEPA and the APA.

RESPONSE: The NRC disagrees with the comments. Many comments faulting the age of the reports referenced in the GEIS did not explain how the passage of time, by itself, invalidates the results of these studies. While the NRC would not object to including other reports not referenced in the GEIS, commenters have not specified what information they believe is missing from the GEIS that these reports could provide. The NRC does not agree that the description of

rack designs and susceptibility to ignition in NUREG–1353 (NRC 1989a) has any bearing on the consequence values from NUREG–1353 reported in the GEIS. On the issue of rack designs, contrary to the comments, the analysis in NUREG–1353 was based on a consideration of high-density storage configurations for both PWR and BWR plants.

With regard to the request for new analyses, the operating reactor accidents at Fukushima Dai-ichi provide no particular insights on the phenomena of spent fuel pool fire because a spent fuel pool fire did not happen at Fukushima Dai-ichi. Also, as noted in Section D.2.38.19 of this appendix, spent MOX fuel is not different from spent uranium oxide fuel in any way that is relevant to the likelihood of spent fuel pool fire.

As discussed in Section D.2.39.23 of this appendix, the primary basis for the NRC's analysis of spent fuel pool fires is NUREG–1738 (NRC 2001b). Neither SECY-13-0112 (NRC 2013l) nor COMSECY–13–0030 (NRC 2013n) were referenced in the GEIS because the GEIS did not rely on either report for its conclusions. As the comments note, there was coordination among the staff involved with all three reports; however, that coordination was limited to verifying whether or not there was likely to be any new information in either SECY-13-0112 or COMSECY–13–0030 that would challenge the conclusions in the GEIS. For more information on how SECY-13-0112 and COMSECY–13–0030 were considered in the GEIS, see Sections D.2.39.28 and D.2.39.30 of this appendix, respectively. For discussion on the 2003 report co-authored by Chairman Macfarlane, see Section D.2.39.26 of this appendix. No changes were made to the GEIS or Rule as a result of these comments.

(473-11-13) (552-2-18) (556-4-11) (556-2-15) (916-2-5) (916-2-6) (916-2-9)

D.2.39.33 – COMMENT: One commenter stated that the spent fuel pool fire consequence results in SECY-13-0112 (NRC 2013l) are not applicable for Indian Point. The commenter presented a variety of site-specific characteristics of the Indian Point site to support that opinion.

RESPONSE: The NRC agrees with these comments. As described in SECY-13-0112 (NRC 2013l), the results of that analysis apply only to a postulated spent fuel fire at the reference facility and were not intended to represent the likelihood or consequences of a spent fuel pool fire at any other facility. For a discussion of how SECY-13-0112 was considered in the GEIS, see Section D.2.39.28 of this appendix. No changes were made to the GEIS or Rule as a result of these comments.

(718-4-12) (718-4-14) (718-4-15) (718-4-16) (718-4-19) (718-4-20)

D.2.39.34 – COMMENT: Several commenters expressed support for the analysis and conclusions in Appendix F of the GEIS.

RESPONSE: The NRC acknowledges the supportive comments. No changes were made to the GEIS or Rule as a result of these comments.

(694-3-16) (808-4) (827-2-13) (827-2-14) (942-12)

D.2.40 Comments Concerning Spent Fuel Pool Leaks

D.2.40.1 – COMMENT: Several commenters provided general comments on the issue of spent fuel pool leaks. Several commenters noted that leaks have occurred and continue to occur, with commenters specifically mentioning leaks at Indian Point and Vermont Yankee. One commenter stated that engineers make questionable assumptions to support their designs. One commenter stated that concrete-lined pools are not 100 percent foolproof and they can leak into the groundwater. Another commenter noted that leaks can occur, sometimes unnoticed, due to corrosion of the stainless-steel liner caused by pool chemistry and emissions from the fuel elements. The commenter noted that boric acid penetration as well as large tritium concentrations outside the pool structure proves that some spent fuel pools have leaked. The commenter further stated that tritium migrations "relatively easily off-site" through liquid drainage from pool leaks and evaporation as water vapor. One commenter noted that a number of spent fuel pool leaks were considered in the GEIS, with all associated impacts "meeting the definition of small because the right steps were taken." Another commenter wondered about intergenerational concerns and how future generations would react to "the inevitable problems of dangerous leaking old fuel pools." One commenter stated that if a spent fuel pool were to have a leak similar to a service-water leak that occurred at Dresden Unit 1, the results could be catastrophic.

RESPONSE: The NRC agrees in part with these comments. The NRC agrees that spent fuel pools are not "100 percent foolproof" and that corrosion of the stainless-steel liner could, ultimately, lead to leakage from the spent fuel pool. As described in Appendix E, spent fuel pool leaks have occurred at a number of sites, including Indian Point. Although not every leak identified in Table E-4 resulted in a release of contamination to the environment, some leaks were not identified until more indirect signs, such as boric acid precipitate, were discovered. The NRC agrees with the comment that the previously identified spent fuel pool leaks have not resulted in significant environmental impacts. The NRC's evaluation of the impacts of a spent fuel pool leak during the short-term timeframe, should one occur, can be found in Section E.2.

On the issue of tritium migration, Appendix E states that tritium does not adsorb onto soil or bedrock and would migrate at the same rate as the groundwater onsite. Although a small amount tritiated water in the event of a spent fuel pool leak could evaporate in a manner similar to non-tritiated water, the concentration in the air would likely be so low as to be non-detectable.

The NRC disagrees with comments that point to leaks at Vermont Yankee as relevant to spent fuel storage during the short-term timeframe. As documented in an NRC inspection report

related to the leaks at Vermont Yankee, the source of contaminated groundwater discovered onsite was an underground pipe vault associated with the Advanced Off-Gas system (NRC 2010e). The NRC also disagrees with the comment that engineers make questionable assumptions to support their designs. The commenter provided no additional information about which assumptions may be considered questionable. The NRC reviews any assumptions that are key to safety-significant systems, structures, or components, as appropriate, as part of individual licensing reviews. Should the NRC identify a potentially inappropriate assumption, the licensee or applicant would need to resolve the potential discrepancy prior to the NRC completing the review.

As to the issue of how future generations would react on the issue of spent fuel pool storage, the GEIS assumes that all spent fuel will be transferred from the spent fuel pools to dry casks storage or a repository by the end of the short-term timeframe; however, the NRC is not aware of any information that would call into question the technical feasibility of continued safe storage of spent fuel in spent fuel pools beyond the short-term storage timeframe. The evaluation in the GEIS is intended to be forward looking and apply to plants that exist now and those that may exist in the future. No changes were made to the GEIS or Rule as a result of these comments.

(30-6-7) (163-34-4) (163-48-5) (205-7) (250-39-4) (410-13) (762-5) (919-6-12)

D.2.40.2 – COMMENT: Several commenters stated that site-specific conditions at Pilgrim, Indian Point, and the four reactors in New Jersey (Salem, Hope Creek, and Oyster Creek) invalidated or made deficient the evaluation of spent fuel pool leaks in the GEIS. Some of the commenters stated that, because of these perceived deficiencies, the NRC should conduct a site-specific review of spent fuel pool leaks. For Pilgrim, commenters stated that the NRC failed to address the discharge of leak-contaminated groundwater and soil, without monitoring, into Cape Cod Bay. One commenter stated that, because the impacts of tritium on aquatic life are not understood, the NRC cannot evaluate the harm that is being done.

For Indian Point, one commenter stated that the NRC did not bound, or consider issues unique to Indian Point, including susceptibility to seismic hazards, which may affect the structural integrity of spent fuel pools, and inadequate plant maintenance and management, both of which the commenter claimed would lead to an increased occurrence of spent fuel pool leaks at Indian Point. Another commenter stated that contamination at Indian Point exceeds drinking-water standards at multiple locations and that the NRC has been reluctant to acknowledge contamination other than tritium, including strontium. Several commenters asserted that only 40 percent of the Indian Point Unit 2 spent fuel pool had been inspected, while the other 60 percent, which is known to be leaking, has not been inspected due to exemptions granted by the NRC. One commenter further stated that the Indian Point leaks were discovered accidentally, not through leak detection or administrative controls. Another commenter challenged the idea that monitoring programs would ensure that impacts from leaks would be unlikely because little, if any, monitoring has occurred at Indian Point and that even if it had,

nothing has been done to fix the leaks. Two commenters stated that the Indian Point Unit 2 spent fuel pool does not have a tell-tale drain system that collects leakage and directs it to a liquid radioactive waste treatment system or other cleanup or collection system. One commenter stated that it is highly likely that the Indian Point Unit 2 spent fuel pool will continue to leak radioactivity into the environment. Another commenter stated the belief that Indian Point Unit 1 was known to be leaking radioactive effluent for years without remediation, which is proof that SAFSTOR is not safe. One commenter stated that tritium and strontium from Indian Point have been detected in water intended to be used for drinking water.

For the New Jersey plants, a commenter stated that groundwater contamination from spent fuel pool and other leaks was not detected by existing monitoring programs, and that the extent of contamination was not fully realized until the licensees expanded their monitoring programs to include the deeper confined aquifer. The commenter stated that groundwater in these deeper aquifers may not flow in the direction of the surface waterbody, which refutes the NRC's assumption that it always will. Also, groundwater usage around both sites could cause contamination to migrate offsite.

RESPONSE: The NRC disagrees with the comments. None of the issues identified invalidate the NRC's evaluation of the environmental impacts of spent fuel pool leaks or establish the need to perform site-specific analyses. For Pilgrim, although the source of groundwater contamination has not been definitively identified, the source of the leak appears to be from underground piping, rather than the spent fuel pool. The contaminated groundwater has remained onsite and is not being allowed to discharge to Cape Cod Bay (MDPH 2014), which is consistent with the evaluation in the GEIS. For a discussion on radiation effects on biota, see Section D.2.28.1 of this appendix.

The comments regarding Indian Point neither raise issues unique to Indian Point nor provide information that would change the impact determinations in the GEIS. Overall, the particulars of spent fuel pool leakage during continued storage at Indian Point, like leakage at any site, are bounded by the generic assessment of leak potential and consequences in Appendix E of the GEIS. On the issue of the potential for future leaks, at Indian Point, the evaluation in the GEIS does not assume that leaks will not occur or will occur only below a certain frequency. For the reasons explained in Appendix E, should a leak occur, it is unlikely that it will remain undetected long enough to cause significant offsite impacts. Regarding existing onsite contamination at Indian Point, any onsite contamination from a spent fuel pool leak will be addressed as part of the license-termination process. For additional discussion on how onsite contamination is addressed, see Section D.2.40.4 of this appendix. Also, contrary to comments, GEIS Tables E-4 and E-5 identify nickel-63, cesium-137, strontium-90, and cobalt-60 as contaminants (other than tritium) from spent fuel pool leaks at Indian Point. On the issue of the Indian Point Unit 2 spent fuel pool, although there are no tell-tale drains installed on the Unit 2 spent fuel pool, the licensee has implemented appropriate administrative controls to detect future leakage. Further,

the licensee has inspected the accessible portions of the Unit 2 spent fuel pool and corrected all identified deficiencies (NRC 2008). While the entire spent fuel pool liner has not been inspected, this is because the proximity of the spent fuel precludes inspection, not because the NRC has granted an exemption to the licensee (NRC 2012m). Additionally, the licensee has implemented sufficient onsite monitoring to characterize the extent of existing contamination as well as identify contamination from any new leak that may occur (NRC 2009c). Regarding the safety of SAFSTOR, the NRC's regulations provide reasonable assurance that public health and safety will be protected during the decommissioning of a facility. There have been no identifiable public health impacts from the leaks at Indian Point. The detection of tritium and strontium in samples taken for the Haverstraw Water Supply Project, referred to in the comments, was attributed to the erosion of natural deposits and were significantly below regulatory limits (HWSP 2012). Finally, the reassessment of a facility's seismic risk and the effectiveness of a licensee's plant maintenance and management are addressed at all facilities through the NRC's ongoing regulatory oversight process. Should new information become available for either issue, the NRC will evaluate that information and take whatever action is appropriate to ensure that a facility is operated in accordance with the NRC's requirements.

Groundwater contamination at Oyster Creek was not a result of a spent fuel pool leak. Additionally, groundwater contamination at Oyster Creek and Salem occurred prior to the implementation of the industry's Groundwater Protection Initiative; therefore, these cases do not speak to the effectiveness of current or future onsite groundwater monitoring programs at those and other reactor sites. Further, the GEIS does not state that contaminated groundwater will remain in the upper, surficial aquifer and will always flow toward the surface waterbody. As discussed in Section E.2.1.3, most nuclear power plants are located at sites where the shallow unconfined groundwater at the site flows into the nearby surface waterbody. Because this is not the case at all sites, potential impacts to offsite groundwater resources are discussed in Section E.2.1.2. No changes were made to the GEIS or Rule as a result of these comments.

(163-7-7) (604-5) (611-34) (611-35) (622-2-16) (710-10) (710-12) (710-23) (710-9) (718-1-17) (920-17) (920-40) (933-9)

D.2.40.3 – COMMENT: Two commenters stated that the NRC cannot generically analyze spent fuel pool leaks for all sites. One commenter stated that the NRC cannot reach a conclusion on the impacts of spent fuel pool leaks to groundwater without knowing the demographics and water use around a site. Another commenter stated that the NRC did not consider or bound site-specific factors in its analysis. The commenter further stated that the NRC's conclusion that the impacts of spent fuel pool leaks can be generically assessed conflicts with the License Renewal GEIS, which concluded that the NRC should analyze the impacts of radionuclides in groundwater during the license renewal period on a site-specific basis, and that the NRC could not rely on the industry's Groundwater Protection Initiative. The commenter stated that failing to

conduct site-specific reviews for the continued storage of spent fuel would be a violation of NEPA and the APA.

RESPONSE: The NRC disagrees with the comments. The analysis in Appendix E describes the impacts that could be expected from a spent fuel pool leak, given the range of hydrogeologic conditions at current and future sites. Further, the assumptions used in the analysis are sufficiently conservative to bound the impacts such that variances that may occur from site to site are unlikely to result in environmental impact determinations that are greater than those presented in the GEIS. Therefore, the impact determinations in Appendix E would apply at all sites. Also, it is important to note that site-specific considerations, such as demographics and water use around a site, are required to be considered in the development of site-specific environmental monitoring programs. The operation of site-specific environmental monitoring programs during continued storage is one reason the NRC can make a generic determination on the impacts of spent fuel pool leaks.

The requirement to conduct a site-specific review of groundwater contamination for the purposes of reactor license renewal does not conflict with the NRC's determination in this GEIS that impacts from spent fuel pool leaks during continued storage can be generically assessed. Further, the NRC disagrees that failing to conduct site-specific reviews for continued storage would constitute a violation of NEPA or the APA. Because of the potential scope of contamination that has to be considered as part of reactor license renewal, both in terms of the number of potential sources and volume of contamination, the NRC determined that a site-specific review was appropriate. In contrast to reactor license renewal, this GEIS considers potential leakage from a single source, a spent fuel pool, which has significantly less volume at risk of leaking as compared to an operating reactor site. Because of the relatively limited scope of potential contamination, as well as other factors described in Appendix E, such as the similar hydrogeologic characteristics at many sites, the NRC has determined that a generic assessment is appropriate for the purposes of this GEIS.

On the issues of groundwater monitoring, as described in Section D.2.40.5, the NRC has determined that groundwater monitoring programs implemented in accordance with the industry's Groundwater Protection Initiative satisfy the subsurface survey requirements of 10 CFR 20.1501. Further, any licensee that chooses to implement a program different than what the industry has committed to would still need to demonstrate compliance with the regulations at 10 CFR 20.1501. Therefore, the NRC has determined that it is reasonable to include licensees' groundwater monitoring programs in the spent fuel pool leaks impacts analyses. No changes were made to the GEIS or Rule as a result of these comments.

(710-18) (710-19) (710-20) (920-39)

D.2.40.4 – COMMENT: Several commenters stated that the NRC's analysis of spent fuel pool leaks is deficient. One commenter stated that the description of potential impacts to

groundwater did not consider potential leaks from spent fuel pools that could develop after reactors shut down. One commenter argued that the frequent use of modifiers indicated a high degree of uncertainty in the NRC's conclusions. Another commenter asserted that there were too many low impact determinations. Several commenters argued that the analysis should contain a quantitative assessment of spent fuel pool leaks, including at least the volume and duration of leaks, speed of the leaks, isotope identification and concentration, and leak detection. One commenter argued that 10 CFR 51.71(d) requires the NRC to include a quantitative analysis of a postulated leak. One commenter stated that the NRC has minimized the danger and health risk of leakage as insignificant and unlikely to migrate offsite. One commenter disagreed with the conclusions in Appendix E, offering a pamphlet entitled "Routine Radioactive Releases from U.S. Nuclear Power Plants" as support. Other commenters expressed general opposition to the NRC's conclusions, or stated that the NRC's analysis was inadequate, without offering specific reasons as to why.

One commenter stated that neither the NRC Standard Review Plans for reactor operations nor any of the safety analysis reports submitted by nuclear power plant operators analyze either a long-term, low-volume leak from a spent fuel pool or the rapid and complete loss of spent fuel pool water into the environment. The commenter argued that because the spent fuel pool leak hazard has not been defined, the adequacy of protection measures cannot be objectively assessed and that there is no assurance that adequate protection will be sustained throughout the 60-year short-term storage period. The commenter concluded that because neither a spent fuel pool leak hazard nor protections against that hazard are explicitly defined in the NRC's regulations and because there is no hypothetical hazard evaluation of a spent fuel pool leak, the conclusions expressed in the GEIS concerning spent fuel pool leaks (i.e., spent fuel pool leaks of 380 L/d [100 gpd] will be detected before causing significant impacts) are speculative and subjective.

One commenter indicated that the GEIS violates NEPA and must evaluate both the probability and the consequences of environmental impacts resulting from spent fuel pool leaks. One commenter stated that there were serious gaps in the analysis and that the NRC failed to support its conclusion that spent fuel pool leaks will be detected or have little impact on the environment. One commenter stated that the NRC's analysis was deficient because it did not consider the cumulative impacts of leaks. Another commenter stated that the GEIS discounts the impacts to drinking water quality and that onsite contamination in excess of drinking water standards exists, but is minimized because the contamination has not migrated offsite. The commenter argued that the NRC needs to consider the impacts from onsite contamination to drinking water in the context of the eventual decommissioning of the site for unrestricted release. Two commenters supported their claim that onsite impacts should be considered in the GEIS by citing examples of spent fuel pool leaks, including those at Salem, Oyster Creek, and Indian Point that have remained onsite and have resulted in costly investigations and cleanup efforts. Two commenters stated that the NRC's evaluation of spent fuel pool leaks was deficient

because it did not consider social and economic impacts, specifically noting property devaluations, remediation costs, and questions about licensee longevity as potential impacts of a spent fuel pool leak.

Additionally, one commenter stated that the NRC should consider impacts to the recreational use of surface waterbodies that could result from a leak. Two commenters argued that the NRC should have evaluated impacts from leaks that result in offsite contamination below NRC and EPA standards because they can have significant impacts even if the Federal regulatory limits are never exceeded. Commenters referenced the leak at Braidwood as an example where offsite groundwater contamination did not exceed Federal limits but required a significant response including the use of bottled water at 420 households and the purchase of property and reimbursement to 14 impacted property owners.

RESPONSE: The NRC disagrees with the comments. The evaluation of impacts of a spent fuel pool leak, which includes a discussion of the impacts to groundwater and surface water, can be found in Appendix E. Appendix E characterizes long-term, undetected leaks and their impacts as “unlikely” because this qualitative assessment best describes the likelihood of these leaks and their impacts. This conclusion is based on the aggregate factors that reduce the possibility of a spent fuel pool leak with sufficient quantity and duration to reach offsite locations. The NRC disagrees that the GEIS’s assessment of this likelihood indicates uncertainty or minimizes the danger and health risk of spent fuel pool leaks. NEPA impact determinations are commonly presented in terms of the degree of likelihood where precise quantification is impractical. The pamphlet that was submitted for consideration provided no information that would challenge any of the conclusions in the GEIS.

The NRC disagrees that it should have performed an additional quantitative assessment in evaluating the impacts from a spent fuel pool leak. As described in Sections E.2.2.1 and E.2.2.2, experience shows that spent fuel pool leakage will likely either remain onsite, or be directed to a nearby surface waterbody. Therefore, the NRC performed a quantitative assessment in Section E.2.2.2 of the impacts to surface waterbodies from a spent fuel pool leak. Table E-2 shows that for a postulated leak rate of 380 L/d (100 gpd), the amount of radionuclides released to a surface waterbody would be bounded by permitted effluent releases from normal reactor operations. The NRC determined that a quantitative model was not required to assess the impacts of a spent fuel pool leak to offsite groundwater because, as discussed in Section 2.2.1, a combination of spent fuel pool design and operational controls, coupled with chemical processes of radionuclide transport, and hydrologic characteristics of typical nuclear power plant settings make it unlikely that a leak will remain undetected long enough or be of sufficient quantity to exceed any regulatory requirement (e.g., the NRC dose limit or EPA-mandated Maximum Contaminant Level) in the offsite environment. Accordingly, an additional quantitative assessment for groundwater would not provide useful information or

lead to a different impact determination. To the fullest extent practicable, the NRC has quantified the various factors considered, consistent with the NRC's NEPA regulations in 10 CFR Part 51.

Section E.2.2 of the GEIS evaluates the environmental impacts of a long-term, low-volume spent fuel pool leak. Section 4.18 and Appendix F of the GEIS evaluates the impacts of severe accidents, which includes consideration of initiating events that could lead to the complete draining of a spent fuel pool. The NRC disagrees that an evaluation of the failure of the spent fuel pool, as is done for the liquid waste management system, is necessary for the purposes of this GEIS, or that the absence of such an evaluation renders the conclusions in the GEIS speculative or subjective. The NRC's analysis is based in part on a consideration of how leaks occur and what factors could influence the consequences of a leak. As a result, the analysis in Appendix E provides a reasonable prognosis for leakage impacts that could occur during continued storage. As for the adequacy of protective measures, the NRC determined that existing regulations are adequate for protection of public health and safety and therefore no new regulatory requirements are necessary (NRC 2011i).

The NRC disagrees that the analysis in the GEIS violates NEPA or that the NRC failed to consider the probability and consequences of a spent fuel pool leak in the GEIS evaluation of impacts. The conclusions in Section E.2.2 are based on a qualitative assessment of the likelihood that a leak of sufficient quantity and duration could occur and result in impacts to the offsite environment. Table E-2 provides a quantitative analysis of leak impacts, comparing the amount of radionuclides released to a surface waterbody from a postulated 380 L/d (100 gpd) leak to the same radionuclides released during normal reactor operations as permitted effluent discharges. As described in Appendix E, there are a variety of factors that minimize the likelihood and consequences to the environment of a long-term, undetected spent fuel pool leak. These include spent fuel pool design and operational controls, chemical processes associated with radionuclide transport, and hydrologic characteristics associated with typical nuclear power plant settings. These factors in the aggregate make it unlikely that a leak will remain undetected long enough, or be of sufficient quantity to exceed any regulatory requirement (e.g., the NRC dose limit or EPA-mandated Maximum Contaminant Level) in the offsite environment.

Regarding comments concerning the onsite impacts of a spent fuel pool leak, as Appendix E explains, the onsite environmental impacts from normal operations and accidents during decommissioning activities, which include spent fuel pool operations, are addressed in NUREG–0586, Supplement 1, Final Generic Environmental Impact Statement on Decommissioning of Nuclear Facilities: Supplement 1, Regarding the Decommissioning of Nuclear Power Reactors (NRC 2002a). The period of decommissioning in NUREG–0586 corresponds to the short-term timeframe of the GEIS. Further, any significant radioactivity identified by licensees, including that resulting from a spent fuel pool leak, must be addressed during the decommissioning process to meet the license-termination requirements of 10 CFR

Part 20, Subpart E. The license-termination process is subject to a site-specific review. The environmental impacts of all onsite and offsite residual radioactive material that may remain after license termination are address in NUREG–1496, Generic Environmental Impact Statement in Support of Rulemaking on Radiological Criteria for License Termination of NRC-Licensed Nuclear Facilities (NRC 1997c).

The NRC's consideration of the cumulative impacts of leaks is discussed in Section D.2.41.4 of this appendix. The NRC's consideration of the socioeconomic impacts from a spent fuel pool leak is discussed in Section D.2.22.4 of this appendix.

On the issue of impacts to recreational use of surface waterbodies, the NRC determined that the impacts to surface water resulting from a spent fuel pool leak would be SMALL. This is because the quantities of radioactive material discharged to nearby surface waters in the event of a spent fuel pool leak would be comparable to values associated with permitted, treated effluent discharges from operating nuclear power plants. See GEIS, Table E-2. Therefore, to the extent that there were impacts to recreational use of surface waterbodies during operations, there would be no new impacts to recreational use of a surface waterbody resulting from a spent fuel pool leak during the short-term timeframe.

The impact from leaks that result in offsite contamination below NRC dose limits and EPA drinking water standards are bound by the NRC's consideration of a postulated leak that could result in contamination that exceeds a public health regulatory limit (e.g., EPA drinking-water standards). As such, no further hypothesizing of these leaks is necessary. The impacts from these leaks are analyzed in Section E.2.2 of the GEIS. Comments reference the leak at Braidwood as an example of impacts; however, the leak at Braidwood was not associated with the spent fuel pool and resulted in a significantly larger volume of water released much closer to the property boundary and over a much shorter time than would occur with a spent fuel pool leak. Further, the remedial action that would be taken in the event of a leak that resulted in contamination below regulatory limits, if any, would likely depend on a variety of factors including the environmental and public health implications, State and local involvement, and the role of EPA. As described in Section E.2.2.1 of the GEIS, in the event of a leak that resulted in groundwater contamination that exceeded a drinking water standard, the licensee could be compelled under the Safe Drinking Water Act to take action, including, but not limited to, providing alternative water supplies, public notification of affected users, and remediation of the contamination. These actions are consistent with the actions suggested in the comments. As such, the impacts from a spent fuel pool leak that results in contamination below a regulatory limit are bound by the NRC's consideration of a postulated leak that could result in contamination that exceeds a public health regulatory limit (e.g., EPA drinking-water standards).

Comments that were general in nature, including the comment that there were too many low impact determinations in the GEIS, provided no new information that would challenge the conclusions in the GEIS. No changes were made to the GEIS or Rule as a result of these comments.

(553-10) (556-3-2) (706-4-13) (706-4-8) (805-10) (817-1) (819-8) (823-46) (897-5-10) (897-5-13) (897-5-16) (897-4-19) (897-4-23) (899-3-1) (899-3-12) (899-3-2) (899-1-3) (899-3-3) (899-2-4) (899-3-4) (899-2-5) (899-3-5) (899-3-6) (915-11) (925-1)

D.2.40.5 – COMMENT: A number of commenters stated that the GEIS analysis of environmental impacts from spent fuel pool leaks improperly relies on compliance with voluntary programs rather than NRC requirements.

Several commenters stated that the GEIS analysis of impacts from spent fuel pool leaks relies on a voluntary groundwater monitoring program developed by the nuclear industry. Further, these commenters stated that the NRC cannot enforce the voluntary groundwater monitoring initiative, that this voluntary program is subject to change by the industry, and that the NRC has no regulatory requirement for licensees to monitor groundwater quality. Several commenters stated that relying on licensees' compliance with voluntary groundwater monitoring programs contradicts *New York v. NRC*, which specifically noted that "pointing to the compliance programs" is not sufficient to support a finding that leaks from "spent fuel pools will not cause significant environmental impacts during the extended storage period." Additionally, several commenters stated that the GEIS erroneously states that licensees are required to perform groundwater monitoring, but the NRC previously acknowledged that groundwater monitoring is only voluntarily initiated by licensees after leaks are detected. Two commenters stated that the NRC should analyze a postulated leak of contaminated water from a spent fuel pool, similar to analyses required in other contexts. One commenter stated that additional measurements should be required to provide earlier leak detection.

Several commenters stated that the GEIS incorrectly claims that spent fuel pool water levels are constantly monitored. These commenters also stated that the GEIS relies on spent fuel pool monitoring requirements that are only applicable during the movement of spent fuel from one storage facility to another.

Several commenters also asserted that there is lessened regulatory oversight after a reactor shuts down and that the GEIS erroneously assumes that groundwater monitoring and NRC inspections will continue during the short-term timeframe. One commenter stated that, based on a search of Inspection Manual Chapters and Inspection Procedures, there is only one inspection procedure applicable to permanently shutdown reactors. The commenter further stated that this inspection has only been performed three times at Zion in the past three years, contrary to the procedure's requirement of semi-annual inspections. Some of these commenters asserted that the NRC requires aging management during a license renewal

period, but not during continued storage. Another commenter stated that the Maintenance Rule and the aging management programs mandated by license renewal rules to guard against equipment degradation apply only during extended reactor operation, and not the short-term timeframe analyzed in the GEIS.

Another commenter stated that the GEIS's assumptions that spent fuel pool maintenance requirements will remain in place during the short-term timeframe and that a licensee is bound by the terms and conditions of its operating license until the license is terminated are incorrect, based on events that occurred at Dresden Unit 1 in 1994. Additionally, the commenter stated that the GEIS is deficient in assuming the Dresden failure to maintain a spent fuel leak detection program and failure to maintain the quality of the water in the spent fuel pool, was an isolated event, and by not identifying specific means to prevent a recurrence. The commenter also pointed to changes in spent fuel handling requirements at Zion and stated the only remaining requirements for protection against spent fuel pool leaks were maintenance of the fuel transfer canal's weir gate seal and the spent fuel pool cooling-water discharge piping. The commenter further stated that the reduced requirements for the Zion plant did not include protection against a long-term, low-volume leak. Commenters are concerned that, without aging management requirements, incidents of age-related failures will increase during continued storage.

Several commenters also stated that licensees with reactors that have been shut down do not receive important safety communications and enforcement orders that are issued to operating reactor licensees, preventing those licensees from learning of necessary safety upgrades for spent fuel pools. One commenter pointed to a 2004 Information Notice on spent fuel pool leaks and three 2012 orders issued in response to Fukushima, one related to spent fuel pool water level monitoring, as examples of issuances to operating, but not permanently shut down, power reactor licensees.

One commenter stated that the GEIS fails to comply with NEPA or *New York v. NRC* because it considers only offsite impacts and relies on institutional controls to manage spent fuel pools. This commenter also stated that the GEIS failed to assess whether the regulatory controls being relied upon to prevent or mitigate the effects of long-term storage are effective. The commenter also stated that the GEIS assumes that existing decommissioning regulations will ensure that all onsite contamination will be remediated during the short-term timeframe and that there is no need to assess onsite impacts from future spent fuel pool leaks.

Another commenter stated that, by failing to conduct a forward-looking analysis, the NRC failed to recognize the significant impacts that could result from spent fuel pool leaks. Another commenter stated that the GEIS should have analyzed the potential impacts of a spent fuel pool leak if it were not detected quickly. One commenter stated that the NRC's inspection report assessing the implementation of the industry's Groundwater Protection Initiative, Summary of Results from Completion of NRC's Temporary Instruction on Groundwater Protection, TI-2515/173 Industry Groundwater Protection Initiation, was based only on monitoring performed

at operating nuclear power plants and not at those that are permanently shut down. The commenter stated that this is contrary to the GEIS, which states that the report was based on inspections of groundwater monitoring at all nuclear power plant sites. The commenter stated that, between August 2008 and August 2010, no groundwater monitoring was performed at permanently shutdown power plants such as Zion and Humboldt Bay. The commenter further stated that the NRC should not rely on a voluntary groundwater monitoring program for the entire short-term timeframe based on one inspection, which was conducted only at operating nuclear power plants.

RESPONSE: The NRC agrees in part and disagrees in part with these comments. As discussed in Section E.1.2, the onsite groundwater monitoring programs that licensees have implemented were done so as part of the industry's Groundwater Protection Initiative (NRC 2011j). This Initiative was a voluntary effort undertaken by industry to address the issue of radioactive contamination being leaked to the environment from a variety of nuclear power plant systems, some of which were spent fuel pools. An important objective of this Initiative is to detect leaks well before radionuclide concentrations approach Federal and State dose and drinking-water limits. Subsequent to this Initiative, the NRC issued the Decommissioning Planning Rule, 76 FR 35512, which, in part, modified the regulations at 10 CFR 20.1501 to require licensees to conduct subsurface surveys (which includes groundwater) to identify the magnitude and extent of subsurface contamination. As described in Appendix E, the NRC has determined that licensees that implement onsite groundwater monitoring programs consistent with the industry's Groundwater Protection Initiative have satisfied the requirements of 10 CFR 20.1501.

While the primary focus of the Decommissioning Planning Rule was to minimize and identify contamination during operations to facilitate the decommissioning process, the subsurface survey requirements of 10 CFR 20.1501 continue to apply following permanent cessation of operations. The subsurface surveys required by 10 CFR 20.1501, which are intended to identify and characterize subsurface contamination, allow for the timely detection of onsite groundwater resulting from a spent fuel pool leak. As the comments note, NRC regulations do not specifically require onsite groundwater monitoring. However, implementing or maintaining an onsite groundwater monitoring program that is consistent with the Groundwater Protection Initiative is an acceptable way for a licensee to satisfy the requirements of 10 CFR 20.1501, and is consistent with the industry's commitment in the Groundwater Protection Initiative. Further, licensees of facilities that have recently entered the decommissioning period have reaffirmed their commitment to maintaining onsite groundwater monitoring programs (DEF 2013; DEK 2013a).

Any licensee that chooses to implement a program different than the industry commitment would still need to demonstrate compliance with 10 CFR 20.1501, even after the end of reactor operations. Although the NRC has chosen not to require onsite groundwater monitoring by

regulation, the Commission has directed the NRC to continue to evaluate the implementation of licensees' groundwater monitoring programs. The Commission has affirmed that if these programs are "not conducted in a committed and enduring fashion, the NRC should present information to this effect to the Commission which can and, if necessary, will revisit this matter" (NRC 2011k).

The NRC disagrees with comments that suggest the GEIS contradicts previous statements made by the NRC indicating that groundwater monitoring was initiated only after leaks were detected. The statements referenced in the comments were made prior to the implementation of the Groundwater Protection Initiative and the Decommissioning Planning Rule. The NRC also disagrees with comments that additional measures should be required to provide earlier leak detection. Sufficient mechanisms are already in place to ensure timely detection of leakage. See Section E.2.1.1 of the GEIS. Therefore, no additional regulatory requirements are necessary. The NRC has revised the discussion of groundwater monitoring programs throughout Appendix E to clarify the requirements for groundwater monitoring.

The NRC disagrees that its inspection and enforcement program is inadequate with regard to spent fuel pool leaks. The NRC has inspected and will continue to inspect the implementation of groundwater monitoring programs. Also, because these programs have been integrated into licensees' existing environmental monitoring programs, the NRC will continue to inspect both the results of and changes to the groundwater monitoring programs through its ongoing oversight process. Should a licensee make a change to its monitoring program that could constitute a threat to public health and safety, the NRC has adequate regulatory tools to compel that licensee to correct the deficiency. The NRC disagrees that the GEIS analysis of offsite impacts from spent fuel pool leaks relies on licensees' compliance. The NRC does not base the conclusions in Appendix E solely on the implementation of groundwater monitoring programs. As discussed in Appendix E, a variety of factors act to prevent and minimize the effects of a spent fuel pool leak to the environment. These include spent fuel pool design (e.g., stainless-steel liners and leakage-collection systems) and operational controls (e.g., monitoring and surveillance of spent fuel pool water levels) that make it unlikely that leaked spent fuel pool water will migrate to the environment, or remain undetected long enough for the leak to adversely affect the offsite groundwater receptors. Additionally, the hydrologic characteristics of a typical nuclear power plant site (see GEIS section E.2.1.3) act to impede the offsite migration of spent fuel pool leakage. In addition, groundwater monitoring programs implemented as part of the Groundwater Protection Initiative, in conjunction with other onsite and offsite radiological monitoring required of licensees, will serve as an important mechanism to detect radiological contamination in the event of a spent fuel pool leak, and will facilitate timely detection of a leak soon enough to prevent offsite migration at levels that could exceed Federal and State dose and drinking water requirements.

The NRC disagrees that a postulated loss of water from a spent fuel pool should be evaluated, such as what is required for the liquid waste-management system. The accident analysis performed for the liquid waste-management system evaluates the consequences of system failures resulting in the release of 80 percent of the volume capacity of a tank and its components (NRC 2007f). The NRC considers the types of failures analyzed for the liquid waste-management system, described in NUREG–0800 (NRC 2012h), to be less likely to occur with spent fuel pools. As described in Appendix E, spent fuel pools are robust, seismically qualified structures, with multiple design and operational controls in place to prevent or detect leaks. Additionally, spent fuel pools are designed to ensure that component failures—such as those postulated for the liquid waste-management system—will not cause the near complete loss of water analyzed for that system. As a result, the NRC does not believe it is necessary to have licensees analyze a postulated loss of water from the spent fuel pool.

The NRC disagrees with comments that state that spent fuel pool water level monitoring is only required during spent fuel movement. As discussed in Section D.2.40.11 of this appendix, licensees are required as part of their licensing bases to have instrumentation to monitor spent fuel pool water levels as long as spent fuel is stored there. The NRC disagrees with comments that regulatory oversight lessens after a reactor shutdown and that the NRC has erroneously assumed that groundwater monitoring and NRC inspections will continue after shutdown. Decommissioning a nuclear power reactor, like its operation, is a licensed activity under 10 CFR Parts 50 and 52. Therefore, licensees of decommissioning facilities are still required to meet all applicable regulations. The NRC continues to maintain its oversight of these facilities throughout decommissioning to ensure compliance with these requirements. With regard to groundwater monitoring during decommissioning, licensees have committed to perform groundwater monitoring, which has been implemented at all decommissioning plants to date. As stated above, licensees that have recently begun decommissioning have reaffirmed their commitment to groundwater monitoring programs. As discussed, if a licensee were to terminate its groundwater monitoring program, it would still need to demonstrate compliance with the subsurface survey requirements at 10 CFR 20.1501. Therefore, it is reasonable to assume that licensees will maintain the capability to detect leaks during the short-term timeframe.

Regarding inspections, the NRC conducts inspections at decommissioning sites during continued storage to verify that spent fuel pools are operated and maintained in accordance with requirements, and to verify the conduct and results of licensees' environmental monitoring programs. In this way, the NRC ensures that there are appropriate mechanisms in place to facilitate the timely detection of spent fuel pool leaks. The NRC inspects licensees according to site-specific master inspection plans. Master inspection plans are periodically reviewed to ensure that facilities are being adequately inspected. As described in NRC Inspection Manual Chapter 2561 (NRC 2003c), the NRC's guidance document for conducting inspections at decommissioning facilities, some of the factors that should be taken into consideration when developing a site-specific master inspection plan include plant design; plant status; licensee

performance, management, and decommissioning schedule. Inspection Manual Chapter 2561 also lists 49 core and discretionary inspection procedures that may be performed at a decommissioning facility, depending on the circumstances (NRC 2003c). Through Inspection Procedure 60801, Spent Fuel Pool Safety at Permanently Shutdown Reactors (NRC 1997d), mentioned in comments, the NRC inspects spent fuel pools to identify any conditions that could result in a siphon or drain path to prevent large loss of water; reviews and evaluates whether the spent fuel pool instrumentation, alarms and leakage-detection systems are adequate; verifies satisfactory implementation of spent fuel pool chemistry and cleanliness control to prevent or minimize the occurrence of leaks; and reviews and ascertains whether spent fuel pool operation is equivalent to that when the system was in operation during reactor power operations, thereby ensuring that spent fuel pools are properly maintained and that leaks will be prevented, or detected in a timely fashion. In addition to Inspection Procedure 60801 (NRC 1997d), the NRC has a variety of other core inspection procedures to ensure that a licensee is performing the necessary spent fuel pool monitoring and surveillance, and that environmental monitoring is being conducted in accordance with its approved radiological environmental monitoring program. Contrary to the comments on Zion inspections, inspections associated with Procedure 60801 have been performed 33 times at Zion since February 2000.

As the comments note, aging management programs for spent fuel pools are intended to manage aging effects during the period of extended operation and may be modified following permanent cessation of operations. However, as stated at 10 CFR 50.65, known as the Maintenance Rule, licensees of decommissioning facilities must continue to monitor “the performance or condition of all structures, systems, or components associated with the storage, control, and maintenance of spent fuel in a safe condition, in a manner sufficient to provide reasonable assurance that these structures, systems, and components are capable of fulfilling their intended functions.” The Maintenance Rule also requires licensees to take appropriate corrective action to correct a deficiency. As such, the Maintenance Rule does apply to decommissioning facilities, and the scope of the monitoring required by that rule does not decrease during decommissioning, such that systems that are important to protecting against a leak are indeed maintained.

The NRC further clarifies how this applies to decommissioning facilities in Inspection Procedure 62801, Maintenance and Surveillance at Permanently Shutdown Reactors, one of the core inspections performed at decommissioning facilities (NRC 1997e). In addition to the spent fuel pool structure, spent fuel components covered under the Maintenance Rule include the spent fuel pool liner and cooling system, spent fuel racks, criticality control design features, radiation monitoring and radiological effluent instrumentation, and spent fuel lifting and handling equipment. Therefore, the NRC ensures that systems, structures, and components important to preventing or detecting a spent fuel pool leak will be adequately maintained during the short-term timeframe. Further, should new information emerge on spent fuel pool-related aging effects, the NRC will take action through the appropriate regulatory process to ensure public

health and safety is adequately protected. Although a comment misstates that licensees are not bound by the terms and conditions of their licenses after shutdown, GEIS section E.1.1 has been revised to clarify that aging management programs associated with reactor license renewal are intended for the period of extended operation and may be modified after shutdown. However, as discussed above, licensees are still required by the Maintenance Rule to maintain structures, systems, and components related to the spent fuel pool after shutdown.

Also contrary to the comment, the GEIS is not deficient in not discussing the Dresden spent fuel pool incident and means to avoid a recurrence. Subsequent to the Dresden incident, the NRC issue Bulletin 94-01, Potential Fuel Pool Draindown Caused by Inadequate Maintenance Practices at Dresden Unit 1, that required licensees of decommissioning facilities to verify and report to the NRC that similar conditions such as those that existed at Dresden did not exist at other facilities (NRC 1994b). Further, the NRC later issued Inspection Procedure 60801 (NRC 1997d), discussed earlier in this response, to ensure routine inspection and verification of spent fuel pool systems in accordance with license requirements.

The NRC disagrees that licensees of decommissioning facilities do not receive important safety communications and enforcement orders. When deciding to communicate information to, or require action by licensees, the NRC evaluates the subset of licensees for which the information or action is appropriate. The NRC determined that the Information Notice and Orders referenced in the comments primarily addressed issues relevant to operating reactors, so the NRC sent that information to operating reactor licensees. Similarly, and for the same reason, Bulletin 94-01 (NRC 1994b), discussed earlier in this response, was sent only to licensees of decommissioning facilities.

The NRC disagrees that the GEIS does not comply with NEPA and *New York v. NRC* because the GEIS allegedly fails to consider onsite impacts from spent fuel pool leaks. As described in Appendix E, the onsite environmental impacts from normal operations and accidents during decommissioning activities, which include spent fuel pool operations, are addressed in NUREG–0586, Supplement 1, Final Generic Environmental Impact Statement on Decommissioning of Nuclear Facilities: Supplement 1, Regarding the Decommissioning of Nuclear Power Reactors (NRC 2002a). Further, any significant radioactivity identified by licensees, including that resulting from a spent fuel pool leak, must be addressed during the decommissioning process to meet the license-termination requirements of 10 CFR Part 20, Subpart E. The license-termination process is subject to a site-specific review. The NRC also disagrees that its reliance upon institutional controls to manage spent fuel pools is misplaced. As discussed in Section D.2.19.1 of this appendix, the NRC believes it is reasonable to assume for the purposes of these analyses that institutional controls will remain in place.

As to the comment that the NRC should have assessed whether regulatory controls to prevent or mitigate the effects of storage have been effective, it is not clear what assessment is sought, or how such an assessment would affect the conclusions in the GEIS. As described in

Appendix B, the NRC has effective regulatory controls in place to ensure that spent fuel can be safely stored during continued storage. Further, license requirements and regulatory oversight in place are adequate to prevent, detect, and mitigate the impacts of spent fuel pool leaks during the short-term timeframe, as described above. The GEIS acknowledges that, while unlikely, a spent fuel pool leak of sufficient magnitude and duration could occur and affect offsite groundwater receptors. The evaluation of those impacts is discussed in Appendix E.

The NRC disagrees that it failed to conduct a forward-looking analysis, or that it did not analyze the impacts of a spent fuel pool leak that was not detected quickly. As just noted, the GEIS analyzes the impacts of a postulated long-term, undetected spent fuel pool leak. While the likelihood of such a leak occurring is informed by a consideration of historical instances of spent fuel pool leaks, the conclusions in the GEIS are based on a consideration of what the impacts would be, should such a leak occur.

Regarding implementation of groundwater monitoring programs at decommissioning sites, Zion's groundwater monitoring program pre-dates the industry's Groundwater Protection Initiative and has been inspected by the NRC as part of its review of the licensee's routine environmental monitoring program (NRC 2006c). Subsequent to the Groundwater Protection Initiative and separate from the inspection performed for operating reactors, the NRC inspected the implementation of the Zion groundwater monitoring program relative to the industry's Initiative (NRC 2012n). The NRC did not inspect the implementation of a groundwater monitoring program consistent with the industry's Initiative at Humboldt Bay, because all spent fuel was removed from the Humboldt Bay spent fuel pool shortly after the Initiative was introduced. However, groundwater monitoring was already being conducted at Humboldt Bay prior to the Initiative (PGEC 2006). Finally, the NRC does not rely on one inspection that was performed only at operating nuclear power plants, as suggested by comments. As discussed previously in this response, the NRC has inspected, and will continue to inspect licensees' groundwater monitoring programs, as appropriate, throughout the short-term timeframe. No changes were made to the Rule as a result of these comments.

(465-6) (473-15-9) (556-3-6) (556-3-7) (706-4-12) (710-17) (718-1-20) (823-50) (897-5-11) (897-5-12) (897-4-21) (897-7-4) (897-5-6) (897-5-8) (897-5-9) (899-2-10) (899-2-11) (899-3-11) (899-2-12) (899-2-13) (899-3-13) (899-2-14) (899-2-15) (899-1-16) (899-2-16) (899-2-17) (899-2-18) (899-2-19) (899-1-2) (899-2-2) (899-2-20) (899-2-3) (899-2-6) (899-2-7) (899-2-8) (899-2-9) (920-3)

D.2.40.6 – COMMENT: Several commenters stated that the GEIS fails to evaluate mitigation measures designed to prevent adverse environmental impacts from spent fuel pool leaks, and that that failure is a violation of NEPA. Commenters offered specific mitigation measures they felt should have been considered in the GEIS, including the following:

- regular inspections of all components of the spent fuel handling system

- replacement of below ground piping with aboveground piping
- consideration of new technologies or materials that might minimize the potential for leaks
- consideration of new seismological information on the integrity of spent fuel pools and changes to spent fuel pool design to account for this new seismological information
- enhanced environmental monitoring, particularly enhanced monitoring to identify impacts to aquatic organisms
- immediate remediation of contamination, including groundwater extraction and soil excavation or treatment
- increased public access to information, including disclosures on a monthly or quarterly basis and improved access to site-specific annual radiological monitoring reports

One commenter stated that the NRC should consider development and enforcement of a mandatory groundwater monitoring program, rather than relying on the industry's voluntary program. Another commenter stated that, in addition to the GEIS's evaluation of long-term leaks, the NRC must either look at the probability and consequences of short-term, high-volume leaks or explain how mitigation measures can prevent environmental impacts from such leaks.

RESPONSE: The NRC disagrees with these comments. Appendix E contains a discussion of several remediation options that are available in the event of a spent fuel pool leak. Further, it is important to note that this GEIS satisfies a small portion of the NRC's NEPA obligations related to the issuance of a reactor or spent fuel storage facility license by generically evaluating the environmental impacts of spent fuel storage beyond the facility's license term. Prior to the completion of an individual licensing action, the NRC will conduct a site-specific environmental review and document the results of this review in an EA/FONSI or EIS. The site-specific environmental review will address, among other things, the environmental impacts of spent fuel storage during the license term. In the site-specific licensing review, the NRC will consider, and, when warranted, implement site-specific mitigation of impacts. During operation, facility operators and the NRC gain significant additional experience with site-specific issues, including those related to issues of site configuration, site hydrology and maintenance history. Compliance with NRC regulations, and any site-specific mitigation and controls informed by the licensing review, operating experience, and ongoing regulatory oversight help to ensure that any unplanned release during operation does not exceed regulatory limits at any given site.

The NRC disagrees that it should include additional consideration of short-term, high-volume leaks in the GEIS. As described in Appendix E, a short-term, high-volume leak is likely to be identified by a licensee and mitigated, if necessary. The mitigation measure that could be taken in an event such as this would vary based on the circumstances of the water loss, but could include taking steps to hydraulically contain the contamination, groundwater treatment, or monitored natural attenuation. Monitored natural attenuation is a process which relies on

natural attenuation processes (e.g., radioactive decay) within the context of a carefully controlled and monitored setting.

For additional discussion on potential effects from the exposure of aquatic organisms to radionuclides, see Section D.2.28.1 of this appendix.

For a discussion on the requirements for groundwater monitoring and the NRC's consideration of groundwater monitoring in the GEIS, refer to Section D.2.40.5 of this appendix. No changes were made to the GEIS or Rule as a result of these comments.

(473-15-10) (783-3-23) (823-42) (897-5-20) (897-5-21) (897-5-22) (897-5-23)

D.2.40.7 – COMMENT: Several commenters did not agree with the NRC's100-gallon per day (gpd) threshold for detectable spent fuel pool leaks. Commenters noted that the NRC's conclusion that a 100-gpd leak from a spent fuel pool will be promptly detected is incorrect and not supported by an analysis of past leaks. Commenters described significant leaks from the Yankee Rowe and Salem nuclear power plants that were greater than 380 L/d (100 gpd) and where detection was delayed. Commenters also pointed out that the NRC did not evaluate leaks that were less than 380 L/d (100 gpd) and described leaks from the Indian Point Nuclear Power Plant and Brookhaven National Laboratory that were less than 380 L/d (100 gpd), not timely detected and resulting in significant impacts. Commenters argued that the NRC must either show that leaks less than 380 L/d (100 gpd) cannot result in significant impacts, even when undetected for the short-term timeframe or the NRC must identify the regulatory requirements that would provide assurance that a leak would be detected before it causes a significant impact. Alternatively, the commenters suggested the NRC could impose a regulatory requirement that all licensees conduct a site-specific evaluation before entering the short-term storage period. One commenter stated that the GEIS does not analyze a major loss of spent fuel pool water from a leak or when "water use has to be dramatically increased in order to prevent a spent fuel fire by providing makeup water."

One commenter questioned what the measurable amount of leakage is that defines NRC's significant contamination criteria and argued that all leaks require sufficient enforcement action.

Another commenter asserted that licensees are not required to have spent fuel pool water level instrumentation or groundwater monitoring systems during the short-term timeframe, and questioned how the licensee or the NRC would detect leaks without these systems. Another commenter questioned the NRC's and a licensee's ability to determine whether past leaks have stopped, which the commenter believes would impair the NRC's and a licensee's ability to determine whether new leaks have started. The commenter believes that the degradation of the Davis-Besse reactor pressure vessel head is an example of an issue that was thought to have been corrected, but was not.

One commenter noted that although spent fuel pool leaks that puddle on a floor or surrounding area can be identified in a timely manner, leaks into the ground are more complicated and timely detection of these leaks is less certain. The commenter indicated that the GEIS should identify the regulatory requirements that remain in place during the 60-year short-term storage timeframe that provide reasonable assurance that "spent fuel leakage of X gallons per day or greater will be detected before causing significant impacts," and that the NRC should demonstrate by analysis applicable to all sites, that "spent fuel pool leakage of less than X gallons per day of infinite duration cannot cause significant impacts."

Another commenter stated that there is no basis for the NRC to assume that all waste from the spent fuel pools will be moved to dry casks by 60-years after the licensed life and it must evaluate the consequences of leaving fuel in the pool beyond the timeframe. This includes examining the effects of structural integrity and how it would affect leaks throughout all three timeframes, short-term, long-term, and indefinite. The commenter noted that the NRC's own technical material (NUREG/CR–7111, Copinger et al. 2012) raises concerns that the structural integrity of spent fuel pools may diminish significantly over time and that aging management program are only designed for 20-year periods of extended storage and may be inadequate for the long-term assurance of pool structural integrity. The commenter also noted that as fuel remains in the pool during extended periods, the outer cladding material encasing the fuel may degrade, allowing fission products to be released into the pool water; because the NRC cannot predict with certainty that all spent fuel will be removed from pools within 60 years, it must examine the probability and environmental consequences of leaks after that time, as well as techniques for managing the aging of spent fuel pools in order to prevent such leaks.

RESPONSE: The NRC disagrees with these comments. The GEIS analyzes the potential for spent fuel leaks and impacts to offsite resources. This analysis is based on typical nuclear power reactor site hydrology, the design and structural integrity of a spent fuel pool, and the regulatory requirements and operational controls in place that influence the ability to detect a leak in a timely fashion and the impacts of a leak, should one escape detection. Having concluded that it is unlikely that a leak of sufficient quantity or duration could occur without detection, or that such a leak would not be impeded by the hydrologic characteristics typical at spent fuel pool locations, the NRC has not found it necessary to make a reasonable assurance finding as to how long a leak will remain undetected before causing offsite impacts. Nor is such a finding appropriate under NEPA for the purpose of this GEIS. Further, the GEIS does not conclude that a leak rate of 380 L/d (100 gpd) is the maximum possible leak rate, or that a leak of that magnitude would be identified or corrected within a defined timeframe. The GEIS postulates a leak rate of 380 L/d (100 gpd) precisely because of the operational experience with the Salem Unit 1 spent fuel pool leak, which persisted for a long period of time before detection. While a leak of greater magnitude is possible, the likelihood that a leak would remain undetected long enough to adversely affect the offsite environment decreases as the magnitude of the leak increases. Conversely, as the magnitude of the leak increases, the likelihood

decreases that the leak will escape detection, either through spent fuel pool water level monitoring and surveillance, or onsite groundwater monitoring.

Although the leak at Yankee Rowe released a large volume of water, as explained in Section D.2.40.8 of this appendix, it is uncertain whether this release resulted from a spent fuel pool leak. This incident therefore has questionable relevance to spent fuel pool leaks analyzed in the GEIS. Yankee Rowe was nonetheless added to GEIS Table E-4 because it is possible that the leak did emanate from the spent fuel pool (see Section D.2.40.8 of this appendix). The NRC also disagrees that it is necessary to specifically analyze a leak rate of less than 380 L/d (100 gpd). Although lessening the leak rate would affect detection though spent fuel pool water level monitoring and surveillance, the leak is still likely to be detected through onsite groundwater monitoring; otherwise, the magnitude of any offsite impacts would be less than described in Appendix E.

In answer to the comment questioning what measurable amount of leakage defines significant contamination, in the context of the GEIS, the NRC considers significant contamination to be such that an NRC effluent release regulatory limit or EPA drinking water standard is exceeded. The NRC has sufficient inspection and enforcement authority to enforce its regulatory limits and to take appropriate action to protect public health and safety. The scope of that action would be commensurate with the level of the threat to public health and safety.

Contrary to the suggestion in the comments, and as explained in Section D.2.40.11 of this appendix, licensees are required by their licensing bases to have the capability to monitor spent fuel pool water levels. In addition, as explained in Section D.2.40.10 of this appendix, licensees have implemented groundwater monitoring programs that satisfy the subsurface survey requirements of 10 CFR 20.1501. The combination of spent fuel pool water level monitoring and surveillance, as well as onsite groundwater monitoring, makes it likely that a spent fuel pool leak will be timely detected. While it is not possible to know with certainty that a particular leak has been stopped, it is possible to establish a baseline of the contamination from existing leakage, such that any new leakage (e.g., from a new leak, or an increase in the existing leak rate) would be detected. The Indian Point Unit 2 spent fuel pool leak is an example of such subsequent detection (NRC 2009c).

The NRC disagrees that there is no basis to assume that all spent fuel will be removed from pools within 60 years. As described in Section D.2.16.10 of this appendix, the NRC continues to believe that it is reasonable to assume that all spent fuel will be removed from the spent fuel pool within 60 years. As such, it is not necessary to evaluate the consequences of spent fuel pool leaks beyond the short-term timeframe. For additional discussion on degradation of spent fuel and spent fuel pool, refer to Section D.2.38.8 of this appendix. No changes were made to the GEIS or Rule as a result of these comments.

(473-15-1) (473-15-2) (556-3-5) (693-4-1) (823-47) (897-5-3) (897-5-7) (899-1-1) (899-1-12) (899-1-14) (899-3-14) (899-1-15) (899-1-9) (899-3-9) (920-34)

D.2.40.8 – COMMENT: Several commenters argued that the NRC either failed to consider all instances of leaks, or did not properly evaluate the impacts of past spent fuel pool leaks. Commenters either identified or provided details concerning the leaks, from the spent fuel pool or otherwise, at Salem, Dresden, Indian Point, Connecticut Yankee, Yankee Rowe, Seabrook, Watts Bar, Palo Verde, Turkey Point, Pilgrim, and Hatch nuclear power plants; BWX Technologies; and the Brookhaven National Laboratory. Several commenters stated that because all historical leaks have not been considered, the NRC has underestimated the likely frequency of past leaks and did not fully consider the consequences of these leaks, which commenters believe were not harmless. One commenter stated that leak at Brookhaven National Laboratory supports the GEIS in that onsite wells detected the leak and that no drinking water supply was harmed. Two commenters provided additional information intended to correct errors in Tables E-4 and E-5 relating to the spent fuel pool leaks at Salem Unit 2 and Watts Bar. One commenter stated that the leak at Salem Unit 2 did not make it into the environment, citing NUREG/CR–7111 (Copinger et al. 2012). One commenter, citing the Watts Bar Final Environmental Statement, stated that the maximum onsite tritium concentration due to the leak at Watts Barr was 550,000 pCi/L, instead of the Table E-5 value of 30,000 pCi/L. One commenter requested additional information about the Salem Unit 2 spent fuel pool leak, which would characterize it as an accidental release to the environment.

Several commenters stated that the NRC failed to fully consider the cause of past spent fuel pool leaks. One commenter noted that the NRC's evaluation did not contain a root cause analysis of past leaks and as a result could not conclude that leaks will not continue or that they will not be more severe in the future. The commenter stated that if the requested root cause analysis shows that the aging spent fuel pools are the cause of the leaks, then greater and more damaging leaks are more probable in the future, which is contrary to the conclusions in the GEIS. Other commenters argued that the NRC's analysis must explicitly identify the means by which past leaks were detected to demonstrate that past leaks were not identified due to site-specific factors or luck. These commenters believe that the NRC must put in place requirements to ensure adequate detection methods remain in place throughout the 60-year short-term timeframe.

Several commenters stated that the leaks listed in Table E-4 undermine the NRC's conclusion that leaks of sufficient magnitude and duration to contaminate offsite groundwater sources above regulatory limits are very unlikely. One commenter stated that based on a comparison of the data in Table E-4 with Table G-1, it is clear that about 17 percent (16 leaks/94 spent fuel pools) of spent fuel pools have already leaked. One commenter expressed concern that the NRC's analysis did not examine why the leaks did not affect public health, including an analysis of whether the leaks were harmless because of site-specific factors. Further, several commenters expressed concern that the NRC did not fully consider the impacts and consequences of spent fuel pool leaks and instead only considered public health impacts due to the leaks. One commenter stated that the NRC maintains that the risk to groundwater from

leaks is low despite the 2006 Liquid Radioactive Release Lessons Learned Task Force Final Report, which indicated that leaks did or could impact groundwater resources relative to established EPA drinking water standards.

One commenter argued that the NRC's analysis is flawed because it makes unsupported assumptions about the NRC's future ability to detect leaks and because it relies on inapplicable or nonexistent regulatory requirements for future leak prevention.

One commenter questioned the structural integrity of spent fuel pools.

RESPONSE: The NRC agrees in part and disagrees in part with these comments. Many of the examples mentioned in the comments had already been considered in the draft GEIS. In those cases, with the exception of information provided for Salem Unit 2 and Watts Bar, the comments did not provide any new information that substantially differs from what the NRC had previously considered in preparation of the GEIS. In the case of the spent fuel pool leak at Salem Unit 2, the comments correctly note that the leakage was contained in the leakage-collection system, and Table E-4 has been updated to reflect that no radioactive liquid was released to the environment. As for the spent fuel pool leak at Watts Bar, the comments correctly notes that the maximum onsite tritium concentration was 550,000 pCi/L and not 30,000 pCi/L. Table E-5 was updated to reflect the actual maximum onsite tritium concentration at Watts Bar. Since groundwater contamination at Watts Bar has remained onsite, this revised concentration does not change the conclusions in Appendix E.

Several examples provided in comments were not appropriate for consideration in the GEIS. Specifically, several comments referenced various cases of leaks at Dresden, Indian Point, and Pilgrim that involved reactor plant systems other than the spent fuel pools. Because these were not leaks from the spent fuel pool, they are not relevant to conditions that will exist during continued storage. As a result, no changes were made to Appendix E to incorporate any additional information regarding these leaks. Similarly, the NRC disagrees that the leaks at BWX Technologies and Brookhaven National Laboratory should be considered in the GEIS. These facilities are neither commercial nuclear power plant sites nor away-from-reactor ISFSIs storing spent fuel. The BWX Technologies facility is licensed to possess a maximum of 4 spent fuel assemblies for the purposes of research, development, and laboratory analyses. Brookhaven National Laboratory is a DOE-owned facility that has never been licensed by the NRC to store commercial spent fuel. Leaks from the spent fuel pool at Brookhaven National Laboratory were associated with the High Flux Beam Reactor. Additionally, the Brookhaven spent fuel pool is unlined and did not have a tell-tale drain system, both typical features in NRC-licensed commercial spent fuel pools. As a result of these considerations, these facilities were not included in Appendix E.

Comments identified three cases—Turkey Point, Connecticut Yankee, and Yankee Rowe—in which spent fuel pool components had either leaked spent fuel pool water or were implicated as

potential sources of onsite contamination. In the case of Turkey Point, a failed seal on a spent fuel pool pump caused a spill of approximately 1,460 gallons of spent fuel pool water, of which six to seven gallons leaked into storm drains (FPL 2006). This condition was promptly identified by the licensee and corrected. The spent fuel pool water that had been released into the environment remained onsite and went back into the intake of the plant cooling canal, which is a large, closed loop onsite flow path (55 FR 38474). This occurrence supports the NRC's finding that a significant short-term loss of water is likely to be identified and mitigated, if necessary, to avoid significant offsite impacts. Table E-4 was updated to include information on the Turkey Point leak. In addition, the NRC has revised Table E-4 to clarify that the releases from Hatch and Turkey Point were associated with significant short-term losses of water, rather than long-term, undetected spent fuel pool leaks.

In the case of Yankee Rowe, the NRC's 2006 Liquid Radioactive Release Lessons Learned Task Force Final Report (NRC 2006a) did not identify Yankee Rowe's spent fuel pool as the source of tritium to groundwater and this occurrence was originally omitted from Table E-4. Most if not all of the contamination described in comments is suspected to have come from a series of leaks from the ion exchange pit that leaked through a construction joint at the common wall between the spent fuel pool and ion exchange pit (YAEC 2006). While the licensee suspected that the spent fuel pool leaked periodically until the installation of a liner in 1979, the amount of leakage was not discernable from water level changes and makeup rates (YAEC 2006). Nonetheless, because a spent fuel pool leak at Yankee Rowe cannot be ruled out, the NRC has updated Table E-4 to include leak information from Yankee Rowe.

In the case of Connecticut Yankee, the 2006 Liquid Radioactive Release Lessons Learned Task Force Final Report (NRC 2006a) identified the potential of a previously unidentified spent fuel pool leak, based on contamination discovered in the vicinity of the spent fuel pool building. The white substance on the exterior of the spent fuel pool building wall, which the licensee conservatively assumed to be boron precipitate in its reporting to the NRC and State, was tested and determined not to be boron (NRC 2006a). Additionally, further inspections performed during decommissioning determined that there was no evidence of any active or previous leak through the spent fuel pool building wall (NRC 2006a). As a result, Table E-4 was not updated to include information about contamination at Connecticut Yankee.

The NRC disagrees that it failed to fully consider the cause of past spent fuel pool leaks. Each leak identified in Table E-4 was analyzed in the documents cited in the GEIS and the causes, to the extent they could be determined, were considered by the NRC in preparation of the GEIS. The NRC acknowledges in the GEIS that leaks have occurred in the past and that there is a potential for spent fuel pools to leak in the future. As described in Section E.2.1.1, spent fuel pool leaks can occur through small cracks in the stainless-steel liner that form due to intergranular stress-corrosion cracking and crevice corrosion, seam or plug weld defects, or damage to the liner. In response to a series of leaks, as described in more detail in Section

E.1.2, the industry has implemented its Groundwater Protection Initiative, that intends to improve licensee response to inadvertent releases of radioactive materials in subsurface soils and water. However, this GEIS is not the appropriate mechanism to identify ways to detect and prevent the occurrence of future leaks.

Spent fuel pools are massive, robust, durable, seismic category I[1] reinforced-concrete structures designed and constructed to withstand the effects of operational loads and severe natural phenomena events without loss of capability to perform their safety functions. Review of available spent pool leak data indicates no reason why future spent fuel pool leaks would be more frequent or severe than those previously experienced. Further, the aging of plant systems, structures, and components is a topic that the NRC continues to address through its ongoing reactor oversight process. Should new information develop that spent fuel pools are aging differently than previously understood, the NRC would require its licensees to implement whatever corrective or remedial actions are necessary to ensure protection of public health and safety. Based on decades of experience with current leak detection methodology, the NRC believes that the licensee programs and mechanisms in place adequately ensure timely detection of leakage; therefore, no additional requirements are necessary. As requested in comments, the NRC has added information to the GEIS explaining how each leak was detected. It is important to note, however, that all known instances of spent fuel pool leaks to the environment have occurred prior to the industry-wide implementation of onsite groundwater monitoring, as discussed below. This is significant because licensees now have an additional tool for future leak detection in contrast to how past leaks were detected. The NRC disagrees that the number of leaks listed in Table E-4 undermines the conclusion in Appendix E that a leak of sufficient magnitude and duration to contaminate offsite groundwater sources above regulatory limits is very unlikely. The NRC does not base this conclusion on the number of spent fuel pools that have, or have not, leaked. As discussed in Appendix E, several factors act to minimize the effects of a spent fuel pool leak to the environment. These include spent fuel pool design (e.g., stainless-steel liners and leakage-collection systems) and operational controls (e.g., monitoring and surveillance of spent fuel pool water levels) that make it unlikely that a leak reach the site's groundwater system, or remain undetected for a significant period of time such that it would impact offsite groundwater receptors. Additionally, the site hydrology of a typical nuclear power plant (see Section E.2.1.3) impedes the offsite migration of spent fuel pool leakage, should the leakage reach the site's groundwater. This conclusion is validated by the consideration of past spent fuel pool leaks in which the resulting contamination has remained onsite, or to a nearby surface waterbody, where the impact are comparable to permitted, treated effluent discharged from operating nuclear power plants. In each case, offsite groundwater users were not affected.

[1] Seismic Category I: Structures, systems, and components designed and built to withstand the maximum potential earthquake stresses for the particular region where a nuclear plant is sited.

Subsequent to the last known spent fuel pool leak identified in Table E-4 that resulted in onsite groundwater contamination, all licensees have implemented onsite groundwater monitoring that satisfies the subsurface survey requirements of 10 CFR 20.1501. Future licensees complying with these requirements are expected to implement this program, as well. Performing onsite groundwater monitoring throughout the short-term storage period, in conjunction with other onsite and offsite radiological monitoring required of licensees, will serve as an important mechanism to detect radiological contamination in the event of a spent fuel pool leak, and should facilitate timely detection of a leak to prevent the offsite migration at levels that could exceed regulatory requirements. Further, this conclusion does not contradict the finding in the 2006 Lessons Learned Task Force Report (NRC 2006a) that leaks did or could impact groundwater resources relative to established EPA drinking water standards. The 2006 report considered the full range of leaks at nuclear reactor sites, rather than just spent fuel pool leaks (NRC 2006a). The 2006 report also took into account instances of onsite groundwater contamination above EPA drinking water limits and at least in one non-spent fuel pool-related case, which did have a measurable impact on offsite groundwater (NRC 2006a). Although there have been no cases of offsite groundwater contamination identified resulting from spent fuel pool leaks, the GEIS nonetheless conservatively acknowledges the potential, however unlikely, for a spent fuel pool leak to impact offsite groundwater receptors.

The GEIS does consider potential public health impacts from spent fuel pool leaks, but concludes that, based on the low probability of a leak affecting offsite groundwater sources, the impacts to public health would be SMALL. The GEIS analysis demonstrates that all contamination from spent fuel pool leaks has either remained onsite, or has flowed to a nearby surface waterbody where the impacts are comparable to permitted, treated effluent discharged from operating nuclear power plants, i.e., no adverse health effects. The NRC did not limit its review to only public health impacts. As described in Section E.2.2, the NRC identified the offsite physical resources that might be adversely impacted by spent fuel pool leaks. Potential public health effects were then evaluated based on impacts to these resources.

Finally, the NRC disagrees that the GEIS analysis is based on unsupported assumptions about future leak detection, or that it relies on inapplicable or nonexistent regulatory requirements. As explained in Section D.2.40.11 of this appendix, licensees are required to have the capability to monitor spent fuel pool water levels, and an unexpected change in water level would indicate a leak. Additionally, as explained above and in Section D.2.40.5 of this appendix, licensees have implemented groundwater monitoring programs that satisfy the subsurface survey requirements of 10 CFR 20.1501. Spent fuel pool water level monitoring and surveillance as well as onsite subsurface contamination surveys constitute regulatory requirements and not assumptions about future leaks. The combination of these requirements makes it likely that a spent fuel pool leak will be timely detected and remedied. No changes, other than those noted for Tables E-4 and E-5, were made to the GEIS or Rule as a result of these comments.

(30-2-6) (34-6) (244-11-13) (465-5) (473-15-3) (531-1-4) (531-2-4) (531-1-7) (531-2-7) (556-3-3) (622-2-11) (622-2-9) (646-21) (647-1) (694-3-15) (706-4-11) (706-4-9) (710-11) (718-1-18) (718-1-19) (821-10) (823-43) (823-44) (897-5-1) (897-1-10) (897-5-2) (897-4-20) (897-5-4) (897-5-5) (899-3-10) (899-1-11) (899-1-13) (899-3-15) (899-1-22) (899-1-4) (899-1-5) (899-1-6) (899-3-7) (919-7-11) (919-7-12) (920-16) (920-8) (925-4)

D.2.40.9 – COMMENT: One commenter stated that "the estimated spent fuel pool leakage (Ci/yr) should be two orders of magnitude higher" than the values reported in Table E-2. The commenter questioned whether an undisclosed dilution factor was applied to the calculations in the GEIS.

RESPONSE: The NRC agrees with the comment. A calculation error resulted in the incorrect values presented in Table E-2 of the GEIS. As a result, the NRC has revised its methodology used to calculate surface-water contamination to more accurately reflect the level of contamination that would be expected in the event of a spent fuel pool leak. Additional discussion has been added in Section E.2.2.2 explaining the basis of the methodology used. Table E-2 has been updated to reflect the results of this analysis. As discussed in Section E.2.2.2, the revised calculation shows that radionuclides released to a surface waterbody in the event of a spent fuel pool leak would still fall within the range of values associated with permitted, treated effluent discharges from operating nuclear power plants. As such, the impact determination of SMALL remains unchanged. No changes were made to the Rule as a result of this comment.

(920-7)

D.2.40.10 – COMMENT: Commenters indicated that groundwater monitoring may not detect spent fuel pool leaks or detect them in a timely manner. One commenter stated that the NRC's claims that contaminated groundwater will be detected through groundwater monitoring are contradicted by the leaks at Oyster Creek and Salem nuclear power plants. The commenter stated that groundwater contamination at these facilities was not detected by radiological environmental monitoring program groundwater sampling. The commenter noted that the experience in New Jersey indicated that contaminant plumes are narrow and that plume concentrations dropped significantly in less than 100 ft between monitoring points. The commenter further stated that, although the GEIS describes how nuclear power plants are developing groundwater monitoring programs that will have conceptual and subsequent numerical models to estimate the dispersion of radionuclide releases to groundwater, the NRC does not require nuclear power plants to use updated geologic and groundwater information. The commenter also alleged that the GEIS downplays the number and impact of leaking spent fuel pools, failing to identify 3 of 16 sites and 9 leak sites at which leaks had reached the environment.

One commenter questioned the NRC's conclusion that water level monitoring and groundwater monitoring would preclude long-lasting spent fuel pool leaks and asserted that a long-lasting, undetected spent fuel pool leak at the Brookhaven National Laboratory illustrates that the detection of radioactively contaminated water in monitoring wells or in the surrounding soil does not necessarily lead to finding a leak from a spent fuel pool. The commenter stated that the Brookhaven National Laboratory spent fuel pool was leak tested numerous times, but misplaced monitoring wells failed to detect the leak. The commenter concluded that the GEIS must explicitly identify the regulatory requirements that remain in place during the 60-year short-term timeframe to provide reasonable assurance that future leaks similar to the Brookhaven National Laboratory spent fuel pool leak or worse cannot result in significant impacts.

One commenter asserted that, in contrast to the GEIS statement that spent fuel pool leaks will only impact water table aquifers and that groundwater will always flow toward the surface waterbody, groundwater flow direction can be changed by "pumping centers" located miles from the surface waterbody. The commenter further stated that groundwater usage near nuclear power plants in New Jersey has increased as the population has increased and that some rivers are now recharging aquifers that were once sources of water for the river. The commenter further noted that tritium contamination at the Oyster Creek and Salem nuclear power plants has migrated from the water table aquifer into deep hydrogeologic units, despite the presence of confining clay layers, and that the groundwater flow in these units may be in a different direction than the water table aquifer. The commenter agreed with the GEIS that closure of the nuclear power plant will result in less water-resource impacts due to the reduction in water use, but asserted that this reduction could impact the groundwater flow direction and subsequent population growth near the closed plant, possibly resulting in local groundwater flow toward offsite pumping centers.

RESPONSE: The NRC disagrees with these comments. The NRC acknowledges that contaminate plumes from spent fuel pools can be narrow and that the ability to detect groundwater contamination through onsite monitoring is dependent on a number of factors, including the site hydrologic characteristics as well as the number and placement of monitoring wells. However, the GEIS does not conclude that groundwater monitoring will detect contamination in every case, or that the combination of onsite groundwater monitoring and spent fuel pool water level monitoring will absolutely preclude long-lasting spent fuel pool leaks. Rather, as discussed in Appendix E, a variety of factors will minimize the likelihood and impact of a spent fuel pool leak to the environment. These include spent fuel pool design (e.g., stainless-steel liners and leakage-collection systems) and operational controls (e.g., monitoring and surveillance of spent fuel pool water levels) that make it unlikely that a leak will either remain undetected for a significant period of time or migrate to the environment, so as to impact offsite groundwater receptors. Additionally, site hydrologic characteristics associated with typical nuclear power plant settings (see Section E.2.1.3) impede any offsite migration of spent fuel pool leakage, should the leakage occur. Further, all licensees have implemented onsite

groundwater monitoring that satisfies the subsurface survey requirements of 10 CFR 20.1501. Performing onsite groundwater monitoring throughout the short-term storage period, in conjunction with other onsite and offsite radiological monitoring conducted as part of a licensee's radiological environmental monitoring program, will allow licensees to detect radiological contamination in the event of a spent fuel pool leak, and should facilitate timely detection of a leak in sufficient time to prevent the offsite migration at levels that could exceed regulatory requirements (e.g., the NRC dose limit or EPA-mandated Maximum Contaminant Level). However, the GEIS acknowledges the unlikely possibility that contaminated groundwater could migrate offsite, resulting in an impact to offsite groundwater receptors. The impacts to offsite groundwater resources are discussed in Section E.2.2.1.

The leaks at Oyster Creek and Salem referenced in comments occurred prior to implementation of onsite groundwater monitoring programs consistent with the industry's Groundwater Protection Initiative, which all current reactor licensees have committed to follow. Therefore, these cases do not speak to the effectiveness of current or future onsite groundwater monitoring programs. As discussed in Section E.1.2, an important objective of the Groundwater Protection Initiative is to detect leaks well before radionuclide concentrations approach regulatory limits (e.g., the NRC dose limit or EPA-mandated Maximum Contaminant Level) for radioactive releases.

While there is no specific NRC requirement for licensees to use updated geologic and groundwater information in developing groundwater monitoring programs, those implemented in accordance with the industry's program must ensure that the site characterization of geology and hydrology provides an understanding of predominant groundwater gradients based upon current site conditions (NEI 2007). Further, while site groundwater flow conditions could change significantly following shutdown, groundwater monitoring programs will be periodically reviewed to identify changes in groundwater flow that results from substantial onsite construction, substantial disturbance of site property, substantial changes in onsite or nearby offsite use of water, and substantial changes in onsite or nearby groundwater pumping rates (NEI 2007). Therefore, a licensee's program should capture any of the changes in local groundwater flow based on the scenarios mentioned in comments.

As discussed in Section D.2.40.8 of this appendix, the spent fuel pool leak at Brookhaven National Laboratory was not considered in the GEIS; however, to the extent that the comment addresses the efficacy of groundwater monitoring, the discussion above applies.

The NRC disagrees that the GEIS states that contaminated groundwater will always stay in the upper water table aquifer and that groundwater will always flow toward the surface waterbody. As discussed in Section E.2.1.3, most nuclear power plants are located at sites where shallow unconfined groundwater at the site flows into the nearby surface waterbody, though this hydrology does not apply at all sites. For that reason, the potential impacts to offsite groundwater resources are discussed in Section E.2.1.2.

The NRC disagrees that the GEIS downplays the number and impact of spent fuel pool leaks. Table E-4 identifies the known or suspected instances of spent fuel pool leaks. However, the impact determinations in the GEIS are not dependent on the number of spent fuel pools that have, or have not, leaked, but rather has assessed the aggregate factors described earlier in this response and explained why they make it unlikely that a leak of sufficient magnitude or duration will remain undetected and unremedied long enough for the leak to affect offsite groundwater receptors. No changes were made to the GEIS or Rule as a result of these comments.

(899-1-23) (899-1-7) (899-1-8) (920-10) (920-18) (920-20) (920-25) (920-28) (920-30) (920-33) (920-41) (920-42) (920-44) (920-45)

D.2.40.11 – COMMENT: Commenters indicated that leak detection in spent fuel pools, particularly long-term, low-volume leaks, is difficult and may not detect leaks at all. Commenters stated that this reality undercuts the conclusion in the GEIS that it is unlikely for leaks to occur and go undetected long enough to result in significant impacts to the environment. In support of this point, commenters provided details on the nature and extent of longstanding undetected spent fuel pool leaks at the Indian Point, Salem, Pilgrim, and Yankee Rowe nuclear power plants, and Brookhaven National Laboratory, stating that neither water level instrumentation nor installed leak detection systems detected these leaks and that significant contamination occurred as a result.

One commenter stated that after the operating life, leaks may not be detected as quickly because of a smaller workforce. The commenter stated that the GEIS must explicitly identify the regulatory requirements that remain in place during the 60-year short-term storage period that provide reasonable assurance that leaks cannot result in significant impacts.

Another commenter indicated that spent fuel pool water level instrumentation is not required to be functioning except when irradiated fuel is being moved within the pool and that groundwater monitoring measures are entirely voluntary. The commenter interpreted the Standard Technical Specifications for reactors with respect to the minimum spent fuel pool water level and, hence, concluded that spent fuel pool level instrumentation is only required to be available when spent fuel is moved, contradicting the NRC's statements that spent fuel pools are being routinely monitored. The commenter further noted that the NRC's presumption that its inspectors will review records such as those prepared by plant workers for tasks like providing makeup water to the spent fuel pool to compensate for evaporation was invalid because there are no regulatory requirements in place during the short-term storage period that ensure spent fuel pool water level instrumentation will be routinely available. The commenter stated the GEIS cannot place much weight on equipment and conditions unless they are actually required to be in place throughout the short-term timeframe.

RESPONSE: The NRC agrees in part and disagrees in part with these comments. Spent fuel pool water level monitoring and surveillance are not infallible and may not detect a leak in every case. Further, depending on the circumstances of the leak (e.g., leak rate), it may be difficult to determine the full extent of a leak through water level monitoring on its own. In most cases, leakage will be collected in a monitored leakage-detection system and will not escape into the environment. However, as noted in comments, there have been cases where spent fuel pool leakage has escaped detection through spent fuel pool monitoring and surveillance and migrated to the environment. The NRC acknowledges the possibility that a future leak could escape detection though spent fuel pool monitoring and surveillance. The NRC's analysis of the environmental impacts of an undetected spent fuel pool leak can be found in Appendix E of the GEIS. For additional discussion on the NRC's consideration of past spent fuel pool leaks, refer to Section D.2.40.8 of this appendix. However, the GEIS does not base its conclusion regarding the environmental impacts from leaks on the assumption that spent fuel pool monitoring and surveillance will identify every spent fuel pool leak. As discussed in Appendix E, several factors that minimize the effects of a spent fuel pool leak to the environment. The combination of these factors makes it unlikely that a leak will make it to the environment or remain undetected for a significant period of time such that it would impact offsite groundwater receptors. See Section E.2.2.1 for additional discussion.

The NRC disagrees that a smaller workforce after shutdown will mean that leaks will not be detected as quickly. Licensees are still required to conduct routine monitoring and surveillance after shutdown. As described in Section D.2.40.5 of this appendix, the NRC also routinely inspects decommissioning facilities to ensure licensees are monitoring spent fuel pool performance.

Contrary to comments on the functioning of spent fuel pool instrumentation only during the movement of spent fuel, all licensees must maintain a minimum water level in the spent fuel pool to provide sufficient radiation shielding from spent fuel. During fuel movement, Technical Specifications require that a minimum water level be maintained so that sufficient shielding is provided in the event of a fuel handling accident. This does not mean, however, that spent fuel pool water level instrumentation is only required during the movement of irradiated fuel. All licensees are required as part of their licensing bases to have sufficient means to detect abnormal conditions in the spent fuel pool that could lead to excessive radiation. This includes spent fuel pool water level instrumentation and alarms. This requirement is applicable at all times, and not just during spent fuel movement, and remains in place as long as spent fuel is stored in a pool. Should a licensee fail to maintain sufficient spent fuel pool water level or instrumentation, the NRC would take appropriate action to ensure the continued protection of public health and safety. No changes were made to the GEIS or Rule as a result of these comments.

(329-12-7) (556-3-4) (706-4-10) (823-45) (899-2-1) (899-1-10) (899-1-17) (899-1-18) (899-1-19) (899-1-20) (899-1-21) (899-3-8) (919-3-14)

D.2.40.12 – COMMENT: Commenters questioned the NRC's assertions in the GEIS concerning soil contamination. One commenter stated that the location where soil contamination is likely to occur depends on many factors "including soil type, groundwater flow, and the size of the leak." The commenter referenced hydrogeological conditions at the Pilgrim nuclear power plant and noted that the Plymouth-Carver Aquifer contains "course-grained soil, the sand and gravel glacial outwash deposits" that are "more susceptible to the infiltration and migration of contaminates than less permeable soils typical of non-potentially productive aquifers." The commenter further noted that contaminants entering into the soil and groundwater at the Pilgrim site "would likely migrate to the Aquifer and/or Cape Cod Bay." Another commenter noted that the GEIS did not appear to contain an analysis of the existing soil contamination over time due to sorption and desorption of contaminants, any projection of additional soil contamination due to contaminant migration, or the potential of creating more soil contamination due to decommissioning activities.

RESPONSE: The NRC agrees in part and disagrees in part with these comments. Soil contamination occurs as spent fuel pool leakage migrates from its source to a groundwater source below. As described in the GEIS and noted in comments, the extent of soil contamination is influenced by several factors, including soil type, direction of groundwater flow, and leak size. Because of the radionuclide-transport processes discussed in Appendix E, most radionuclides in spent fuel pool water are likely to be absorbed onto the concrete structure of the spent fuel pool, or soils surrounding the leak location. Further, because the hydrogeological conditions at most sites are such that contamination will either remain onsite, or be directed to a nearby surface waterbody, it is unlikely that offsite soil contamination would occur.

As for an analysis of existing soil contamination over time, or the impact of decommissioning activities on soil contamination, the onsite environmental impacts from normal operations and accidents during decommissioning activities, which include spent fuel pool operations, are addressed in NUREG–0586, Supplement 1, Final Generic Environmental Impact Statement on Decommissioning of Nuclear Facilities: Supplement 1, Regarding the Decommissioning of Nuclear Power Reactors (NRC 2002a). Any significant radioactivity identified by licensees, including that resulting from a spent fuel pool leak, must be addressed during the decommissioning process to meet the license-termination requirements of 10 CFR Part 20, Subpart E. The license-termination process is subject to a site-specific review. Further, the environmental impacts of all onsite and offsite residual radioactive material that may remain after license termination are address in NUREG–1496, Generic Environmental Impact Statement in Support of Rulemaking on Radiological Criteria for License Termination of NRC-Licensed Nuclear Facilities (NRC 1997c). Concerns about leaks at a specific plant, such as Pilgrim, are outside the scope of this GEIS. No changes were made to the GEIS or Rule as a result of these comments.

(622-2-4) (711-36)

D.2.40.13 – COMMENT: One commenter questioned the effectiveness of "natural attenuation' as a groundwater remediation approach. The commenter asserted that monitored natural attenuation at the Indian Point Nuclear Power Plant in New York means that existing and future groundwater contamination will remain in the groundwater until it reaches the Hudson River or decays. The commenter further noted that "radioactive groundwater contamination will release to the Hudson River for upwards of centuries," and that extraction of the contamination would "better minimize the impact of the groundwater contamination on the environment."

RESPONSE: The NRC disagrees with the comment. As a proven approach for addressing radiological contamination, monitored natural attenuation has been accepted by the EPA (EPA 1999) and many state environmental regulatory agencies, such as the New York State Department of Environmental Conservation (NYSDEC 2010). Monitored natural attenuation may be accepted in lieu of more active remediation technologies in cases where chemical, biological, or radioactive decay processes will cause the groundwater or soil contamination to reach regulatory limits within a reasonable timeframe. As described in Section E.1.3, the decision whether and how to remediate the contamination from a spent fuel pool leak is based on a variety of circumstances, including the source and magnitude of the contamination events; the local and regional groundwater systems; and the NRC's and other Federal and State regulatory requirements. Areas of significant onsite contamination that could potentially serve as a source of contamination to offsite water resources would be remediated, as appropriate, during license termination. Prior to license termination, if a spent fuel pool leak or onsite contamination had the potential to result in significant offsite contamination of water resources, licensees would take steps consistent with the requirements at 10 CFR 20.1406(c) and the ALARA program to isolate or remediate the contamination to terminate or prevent the spread of contamination offsite. As described in Section E.3, the Indian Point spent fuel pool leaks have not resulted in significant offsite contamination. No changes were made to the GEIS or Rule as a result of this comment.

(710-13)

D.2.40.14 – COMMENT: One commenter stated generally that there could be serious public health issues in the event of a leak from, or a successful terrorist attack on, a spent fuel pool. Additionally, the commenter suggested that residents living in the vicinity of a facility might suffer from psychological stress due to the potential of leaks, even if the potential for impacts from contamination is low.

RESPONSE: The NRC disagrees with the comment. The NRC's evaluation of spent fuel pool leaks that could occur in the short-term timeframe can be found in Appendix E of the GEIS. As stated in Section 1.8.3 of the GEIS, the NRC assumed that all the spent fuel is moved from the pool to dry cask storage within the short-term timeframe, which means that the spent fuel pools would not be used for continued storage during the long-term or indefinite timeframes. Appendix E includes a discussion of factors that could influence the impacts of spent fuel pool

leaks including spent fuel pool design and maintenance; operational practices (e.g., spent fuel pool leakage monitoring and groundwater monitoring); site hydrogeological characteristics; and radionuclide-transport properties. This appendix also includes a discussion of the impacts of spent fuel pool leaks during the short-term timeframe, should leakage make it offsite. The NRC's evaluation of potential acts of terrorism or sabotage is found in Section 4.19 of the GEIS. Although the consequences of a successful act of sabotage or terrorism could be severe, the probability of a successful attack with these consequences is very low. As such, the NRC has determined that the risk of a successful attack is small.

With respect to the comment's point about psychological stress due to the potential for leaks, psychological and social stresses are not environmental impacts evaluated under NEPA (*Metropolitan Edison Co. v. People Against Nuclear Energy*). As a result, the GEIS does not contain a discussion about any potential psychological stresses caused by the potential for leaks from a spent fuel pool or ISFSI. The NRC is charged with protecting the public from unnecessary exposure to radiation as a result of civilian uses of nuclear materials. Toward that end, the NRC requires nuclear power plants; research reactors; and other medical, industrial, and academic licensees to use and store radioactive materials in a way that keeps radiation exposures within the agency's specified dose limits and ALARA. For additional discussion on perceived risk see Section D.2.22.3 of this appendix. No changes were made to the GEIS or Rule as a result of this comment.

(205-19)

D.2.40.15 – COMMENT: One commenter asserted that the source of the initial radionuclide concentrations in the spent fuel pool is unclear and that the identified reference NRC (2006a) *Liquid Radiological Release Lessons Learned Task Force Final Report* does not contain the cited information. The commenter further noted that the basis for the initial concentrations of spent fuel pool radionuclides of concern was unclear and noted that, with regard to tritium, it is not unusual for spent fuel pool concentrations to be an order of magnitude higher than the reported 2.9×10^{-2} µCi/mL.

RESPONSE: The NRC agrees in part and disagrees in part with these comments. The citation for the initial radionuclide concentrations presented in Table E-1 should have been NRC (2006a) rather than NRC (2006d). The source for the values comes from the report Indian Point Nuclear Generating Unit 2—NRC Special Inspection Report No. 05000247/2005011 (NRC 2006a). Footnote (b) in Table E-1 has been updated to reflect the correct citation.

The NRC disagrees that it would not be unusual for concentrations to be an order of magnitude higher than the values that were presented in Table E-1. The values presented are from a spent fuel pool at an operating nuclear power plant and could be considered to be reflective of concentrations at the beginning of the short-term timeframe for a typical spent fuel pool. Further, the comments provided no additional information that would indicate other values would

be more appropriate. As a result, the NRC has not changed the concentration values in Table E-1. No changes were made to the Rule as a result of these comments.

(920-4) (920-5)

D.2.40.16 – COMMENT: Multiple commenters provided general comments expressing support for the NRC's analysis in the GEIS of the issue of spent fuel pool leaks.

RESPONSE: The NRC acknowledges the comment support for the analysis of spent fuel pool leaks in Appendix E of the GEIS. No changes were made to the GEIS or Rule as a result of these comments.

(246-14-3) (694-3-4) (697-2-13) (827-2-10) (827-2-11)

D.2.41 Comments Concerning Cumulative Impacts

D.2.41.1 – COMMENT: A commenter stated that the ranges of resource-specific impact conclusions reported in the GEIS cumulative impact analysis imply that the environmental impact of each facility should be evaluated individually rather than generically. The commenter referenced Table ES-5 of the GEIS, noting that the cumulative effects impact conclusions range from SMALL to MODERATE or SMALL to LARGE for most resource areas. The comment is unclear why the GEIS cumulative impact ranges suggest a separate site-specific analysis is needed. The NRC interprets the comment as implying that a site-specific impact analysis for a given facility would result in a single impact determination for each resource area, rather than a range.

RESPONSE: The NRC disagrees with the comment. Based on the inherent temporal uncertainties that exist whether the continued storage analysis were conducted site-specifically or generically, the NRC expects that a site-specific continued storage cumulative impact analysis would be unlikely to result in a smaller or different range of impact conclusions than that determined in Section 6.4; therefore, a generic approach to evaluating the cumulative impacts of continued storage is appropriate.

The range of impacts for the cumulative impacts analysis is based on uncertainty related to both geographic variability and the temporal scale of the analysis. For example, in Chapter 6 of the GEIS, the NRC acknowledges that reasonably foreseeable actions that would occur near a storage facility would depend on the location of the storage facility. In addition, reasonably foreseeable actions include a degree of uncertainty that generally increases with time into the future. Specifically, the uncertainty and variability associated with projections about reasonably foreseeable future actions and their impacts on the environment contribute to the range of conclusions in the cumulative impact analysis.

In general, the temporal uncertainty associated with the continued storage impact analysis is high because, as described in Sections 1.2 and 1.8.2 of the GEIS, the period of analysis begins after the end of licensed operations and then continues for 60 years (short-term timeframe), plus 100 years beyond the short-term timeframe (long-term timeframe), and indefinitely beyond the long-term timeframe (indefinite timeframe). Although a site-specific continued storage impact analysis would eliminate geographic variables, temporal uncertainties would not be eliminated or even reduced. Thus, a site-specific review would not provide any greater certainty about the range, duration, and intensity of reasonably foreseeable activities and impacts well into the future. Therefore, the NRC expects that a site-specific continued storage cumulative impact analysis would be unlikely to result in a smaller or different range of impact conclusions than that determined in Section 6.4, and a generic approach to evaluating the cumulative impacts of continued storage is appropriate.

In response to this comment, the NRC has added descriptions of temporal uncertainties associated with (1) general trends and activities in Section 6.3.1 of the GEIS and (2) impact ranges in the summary of cumulative impacts in Section 6.5 of the GEIS. No changes were made to the Rule as a result of this comment.

(920-19)

D.2.41.2 – COMMENT: A commenter questioned the SMALL impact conclusions in the GEIS, in general, noting that centuries of storage at multiple sites would be expected to have measurable effects on dedicated land-use and terrestrial resources.

RESPONSE: The NRC disagrees with the comment. The SMALL cumulative impacts conclusions in the GEIS would not be expected to be larger based on the long period of analysis and the number of sites where continued storage would occur. Within the timeframes of the analysis framework described in Section 1.8.2 of the GEIS, the centuries of continued storage mentioned in the comment would occur beyond the short-term period, which includes the end of spent fuel pool storage, and therefore would only involve dry cask storage facilities. As described in Sections 2.1.1.2 and 2.1.3 of the GEIS, dry cask storage systems are passive in nature and do not occupy large tracts of land relative to, for example, the amount of land used for nuclear power plants. Therefore, the terrestrial and land-use impacts are constrained by the small and limited nature of the activities. Even over very long periods these resource impacts remain small because there are only limited changes over time (e.g., the expected facility replacement every 100 years). In addition, the number of storage sites in the nation, for example, does not affect the magnitude of cumulative impacts to terrestrial and land-use impacts because, based on the purpose of the GEIS to support an individual licensing action, the GEIS cumulative impact analysis evaluates only those impacts that would accumulate with the impacts from continued storage at an individual proposed storage site over time or geographically. Because the geographic area of influence for a dry cask storage facility for terrestrial and land-use impacts is limited to the land around the facility, multiple site impacts

would not accumulate unless facilities were sited in close proximity. The detailed bases for all GEIS impact analysis conclusions are documented in the resource-specific impact analyses in Chapters 4, 5, and 6 of the GEIS. No changes were made to the GEIS or Rule as a result of this comment.

(262-5)

D.2.41.3 – COMMENT: Several commenters asserted that the GEIS failed to include an integrated analysis of the information that supported the analysis in the GEIS. Commenters expressed concerns about various aspects of integration in the cumulative effects analysis including accumulating impacts over time; geographically (e.g., nationally rather than at the site level); among various past, present, and reasonably foreseeable future actions; and across related resource areas. Commenters were also concerned that systems, conditions, and impacts in the GEIS were categorized and evaluated separately rather than together in an integrated manner.

One commenter argued that the GEIS underestimated impacts because it had not integrated spent fuel pool storage impacts during power plant operations with the continued storage impacts at all sites. Another commenter suggested the GEIS had not evaluated the accumulated impacts of radioactive wastes and effluent releases from military, civilian, and medical nuclear operations over past, present, and future decades. In addition, the commenter requested that the GEIS include an examination of the cumulative effects of all past, present, and future releases of radionuclides (including the different pathways and effects). The commenter suggested that a number of small individual impacts would not add up to small total impacts, and that some impacts had multiplicative effects when taken together. The commenter asserted the draft GEIS had not used the most current medical research and environmental studies and had not integrated impact analyses involving accelerative factors (e.g., water-resource depletion, dwindling fisheries, polluted and heated waterways, algal growth, additional accidental releases from power plant operations, and additional heat and radioactive effluents added to groundwater and surface water). The commenter referred to an unspecified NAS study and other studies that emphasized the additional vulnerabilities of environmental justice populations and of women, children, infants, and the unborn that had not been adequately evaluated in the GEIS.

RESPONSE: The NRC disagrees with the comments. Section 6.4 of the GEIS examined the cumulative impacts of reasonably foreseeable past, present, and future actions that could have impacts that would overlap in both space and time and accumulate with the impacts from continued storage. The geographic scope of the GEIS cumulative impact assessment was defined in Section 6.4 for each affected resource to encompass the geographic area of the resource and the distances where impacts associated with past, present, and reasonably foreseeable actions may occur. Additional descriptions of the geographic scope of the GEIS impact analyses are provided in Sections D.2.35.17 and D.2.41.8 of this appendix.

Regarding the accumulation of impacts over time, many of the continued storage impacts were small and were characterized on an annual basis (e.g., greenhouse gas emissions and radiation doses) in the direct and indirect impact analyses of Chapters 4 and 5. The conclusions of these impact analyses were incorporated by reference into the Chapter 6 cumulative impact analyses. Because reactor renewal and licensing EISs were considered in Chapter 6 to define trends and estimate the magnitude of impacts from past, present, and reasonably foreseeable future actions in the vicinity of reactor sites, some analyses considered effects that would be additive over time. For example, entrainment, impingement, thermal discharges, and chemical discharges were considered in the cumulative impact analysis of aquatic ecology (Section 6.4.10.1 of the GEIS); greenhouse gas emissions from the uranium fuel cycle were accumulated into the carbon dioxide emission estimate for a reactor in Table 6-2; and a dose was accumulated over the 20-year period of transportation of spent fuel from an away-from-reactor storage facility to a repository in Section 6.4.15.2 of the GEIS.

The GEIS cumulative impact analyses considered the possibility that, as described in Chapter 6 of the GEIS, an impact that may be SMALL by itself could result in a MODERATE or LARGE cumulative impact when considered in combination with the impacts of other actions on the affected resource. For impacts that could accumulate over time but were small and considered sustainable for the resource, it was not necessary to explicitly and quantitatively accumulate these impacts over time. For example, some impacts would continue to remain a small proportion of the total annual impact (e.g., a radiation dose that was a small fraction of a standard or natural background dose). As described in the conclusions subsections of each resource-specific cumulative impact analysis in Chapter 6, many impact conclusions were based on the accumulation of SMALL continued storage impacts with the overlapping impacts of other actions to reach MODERATE cumulative impact conclusions.

The GEIS also integrated, as applicable, the impact analyses across related resources (e.g., the environmental justice impacts analysis in Section 6.4.3 of the GEIS that considers the impacts from ecological, historic and cultural, and socioeconomic resource areas). No changes were made to the GEIS or Rule as a result of these comments.

(341-2-4) (341-2-7) (897-7-15)

D.2.41.4 – COMMENT: Commenters stated that the GEIS failed to adequately analyze the cumulative impacts of leaks from spent fuel pools. Two commenters stated that the GEIS does not evaluate the cumulative impacts of leaks from multiple spent fuel pools in ecologically sensitive areas (e.g., the area surrounding the Turkey Point Nuclear Generating Station site). One commenter expressed concerns about the cumulative impacts of all leaks from multiple sites, highlighted leak detection difficulties and monitoring and inspection issues as complicating factors, and called for additional data and analysis. Another commenter added that the GEIS does not consider the combined impacts from multiple radiological releases from sources such as spent fuel pools, other contaminated areas or sites, buried piping, human error, or accidents.

The commenter described examples including the Turkey Point site that includes multiple spent fuel pools and the Vogtle Electric Generating Plant site that is adjacent to the Savannah River Site, which stores nuclear waste. The commenter cited NRC licensing board statements (NRC 2012o) about (1) the potential for spent fuel pool leaks to enter groundwater and co-mingle with other releases, (2) difficulties in parsing groundwater contamination by source contributions, and (3) the resulting necessity to evaluate groundwater impacts on a site-wide basis. The commenter argued that non-spent-fuel-pool leaks at power plant sites would increase in the future as plants age. The commenter referenced a 2011 GAO report that described past leakage problems associated with difficult-to-inspect buried pipes and components that were projected to continue into the future. The commenter argued that because the GEIS cumulative impact analysis did not consider such reasonably foreseeable impacts, the analysis violates NEPA. Another commenter asserted that the GEIS analytical framework was too narrow and therefore the NRC did not adequately evaluate the cumulative effects of long-term spent fuel pool leaks on aquatic organisms and ecosystems. The commenter referred to the Hudson River area surrounding the Indian Point Energy Center site as an example of an ecosystem that should have been evaluated.

RESPONSE: The NRC disagrees with the comments. The GEIS analysis of spent fuel pool leaks concludes that the dose from postulated spent fuel leaks would be of low magnitude, such that the dose would not significantly add to the doses from other sources, nor be significantly increased by additional pool leaks. The low magnitude of postulated leaks and low estimated public dose support the conclusion that the impacts from spent fuel pool leaks during the continued storage period would be SMALL.

The spent fuel pool leaks analysis in Appendix E of the GEIS considered the historical experience with pool leaks at operating power plants and various factors that influence the potential magnitude of impacts of postulated spent fuel pool leaks including pool design; radionuclides of concern; radiological characteristics including half-life; fuel pool operational requirements; and practices including monitoring, leak detection, and common hydrologic conditions that affect flow and transport to offsite locations (e.g., low flow gradients, sorption during transport, and proximity to large surface waterbodies). The analysis focused on resources that would be the most likely to be impacted in the event of a spent fuel pool release including groundwater, surface water, soils, and public and occupational health.

The analysis concluded impacts to these resources from postulated spent fuel pool leaks would be SMALL based on the historical experience to date and the combination of factors that limit the potential for offsite impacts. The maximum estimated undetected leak of pool water was found to be sufficiently low that when combined with the other factors that limit the likelihood of offsite migration, the potential that standards would be exceeded was considered unlikely. Historical data on the magnitude of spent fuel pool leaks confirmed releases have either remained within the site boundary or discharged to surface water where they were diluted to low

levels. To gain insights into the magnitude of potential offsite public health impacts, Appendix E of the GEIS referenced a dose calculation considering a maximum onsite tritium concentration of leaked pool water from a site with two pools. For this case, all onsite groundwater was assumed to be discharged directly to an offsite river with no accounting for any conditions of transport that could limit such releases. The resulting dose of 0.0021 mrem/yr is a fraction of the 311 mrem/yr natural background dose reported in Table 3-3 of the GEIS and the NRC dose limits for individual members of the public given in 10 CFR Part 20, Subpart D that apply to power reactors and associated fuel pools (see Section 3.16.1 of the GEIS). Because this low magnitude of public dose would not significantly add to public doses from other sources (e.g., other contaminated areas or sites, buried piping, human error, or accidents) nor be significantly increased by additional pool leaks as recommended by commenters, the recommended changes to the analysis are not needed to support impact conclusions or comply with NEPA.

Unique site-specific environmental conditions including radiological contamination from past, present, and reasonably foreseeable activities or sensitive ecology that may be threatened by various regional activities would be addressed by the NRC during power plant or storage facility licensing reviews or renewals.

The GEIS analysis of impacts from postulated spent fuel pool leaks provides an adequate basis for concluding that offsite releases and impacts would be sufficiently small that making changes to account for multiple additional sources of radiological materials or unique environmental conditions that would be evaluated in greater detail during licensing reviews would not improve the analysis nor change the conclusions. No changes were made to the GEIS or Rule as a result of these comments.

(244-8-4) (710-21) (823-53) (897-5-18) (897-5-19)

D.2.41.5 – COMMENT: One commenter claimed the cumulative impacts of pool storage on the environment from water use and heat discharge over 60 years of continued storage cannot be “SMALL” because the pool impacts would add to the reactor impacts that occurred during operation. Referring to Table 4-1 and pages 4-30 and 4-31 of the draft GEIS, that compare previously evaluated reactor impacts with spent fuel pool impacts, the commenter argued the NRC is calling pool impacts “SMALL” just because reactor impacts are so much larger.

RESPONSE: The NRC disagrees with the comments. The commenter cited a conclusion from the direct and indirect impact analyses of terrestrial impacts in Chapter 4 of the GEIS to assert a failure to consider cumulative impacts; however, the cumulative impacts analysis of terrestrial impacts is located in Chapter 6 of the GEIS, and that analysis includes the accumulation of the impacts from power plant operations that would be expected to accumulate with the direct and indirect impacts from continued storage. Because the impacts from cooling identified in the comment are not expected to accumulate with continued storage impacts, they are not

described further in the GEIS cumulative impact analysis. Additional details are provided in the following paragraphs.

Section 4.9 of the GEIS considers the incremental direct and indirect impacts on terrestrial resources of continued storage in spent fuel pools during the short-term timeframe. The comparison of water demand and heat loads for reactor operations and continued spent fuel pool storage in Table 4-1 and described in Section 4.9.1.1 of the GEIS demonstrated that water withdrawal requirements for a spent fuel pool are low relative to a power reactor. Because continued storage would occur after the end of a reactor's licensed life for operation (Section 1.0 of the GEIS), the water demand and heat loads for reactor operations in Table 4-1 would not occur during continued storage; therefore, the overall water demand and heat loads for continued storage would be limited to the much lower spent fuel pool demands. Considering the anticipated SMALL to MODERATE impacts from reactor operations, the NRC concluded that the significant reductions in the water demand and heat loads during continued storage would reduce the related impacts to a SMALL and sustainable impact level that would be unlikely to increase during the short-term timeframe.

Within the context of the cumulative impacts analysis, the reactor operations impacts from water use and heat load that were mentioned in the comment included temporary MODERATE impacts on terrestrial resources from water use and SMALL impacts from all other cooling system operations based on the analysis in the referenced License Renewal GEIS (see Section 4.9.1.1 of the GEIS). These SMALL and temporarily noticeable impacts associated with cooling during reactor operations are not expected to persist into the continued storage period and therefore are not described as accumulating impacts from past actions in the terrestrial cumulative impact analysis in Section 6.4.9 of the GEIS.

It is important to remember that the impacts of continued storage determined in the GEIS will be considered as part of the licensing of individual reactors, at which time the NRC will prepare a site-specific analysis of the impacts of reactor operations in order for the decisionmaker to have a complete picture of the impacts of the generation and storage of spent fuel, including the impacts of water demand and heat loads.

The NRC considers the GEIS to have provided an adequate basis for the environmental impact determinations. No changes were made to the GEIS or Rule as a result of these comments.

(919-7-17) (919-7-18)

D.2.41.6 – COMMENT: Regarding the analysis of spent fuel pool fires in Appendix F of the GEIS, a commenter noted that NRC impact conclusions are based on the low annual probability of a fuel pool fire at a single facility (odds of about 1 in 60,000). The commenter suggested the approach is not protective of public safety because the same risk for the population of 100 operating reactors over their operational life would be much higher (citing 1 in a few thousand).

RESPONSE: The NRC disagrees with the comment. The analysis of spent fuel pool fires in Appendix F of the GEIS supports the impact analysis in Section 4.18.2.1 of the GEIS regarding severe accidents in spent fuel pools. The mean annual accident frequencies reported in Table F-1 of the GEIS are at least a factor of 10 lower than the value asserted in the comment and the GEIS analysis characterizes the frequencies as being conservative (overestimated). Although the annual accident frequency at a specific facility may be higher than the mean, it is still estimated to be much lower than asserted in the comment.

The recommendation that the GEIS report the risks on a national scale for all reactors goes beyond the scope of the cumulative impact analysis, which is to evaluate the continued storage impacts applicable to an individual reactor licensing action while taking into account the additional impacts of past, present, and reasonably foreseeable future actions that would overlap in both space and time and accumulate with the impacts from continued storage. A more detailed response to comments that requested that the GEIS analyze and report risks on broader geographic and temporal scales is provided in Section D.2.35.17 of this appendix. No changes were made to the GEIS or Rule as a result of this comment.

(552-2-1)

D.2.41.7 – COMMENT: A commenter questioned the analysis of cumulative impacts due to climate change. Specifically, the commenter noted that Section 6.4 of the GEIS concludes that cumulative impacts to climate would be noticeable but not destabilizing with or without the greenhouse gas contributions from continued storage. The commenter asked whether these climate projections were made for a period of 240,000 or 250,000 years. In addition, the commenter stated that the NRC should consider worst-case accident scenarios in its analysis.

RESPONSE: The NRC disagrees with the comment. The conclusion in Section 6.4.5 of the GEIS that the impact to climate change from past, present, and reasonably foreseeable future actions would be noticeable but not destabilizing is based on the scientific assessments of climate change projections by the GCRP (GCRP 2014, 2009) and carbon dioxide emissions criteria in the final EPA “Prevention of Significant Deterioration and Title V Greenhouse Gas Tailoring Rule” (75 FR 31514). The GCRP report evaluated 50 years of climate data and projected climate changes over a timeframe that extends to the end of the century. The GCRP reports and peer-reviewed assessments from GCRP were suggested as sources of the best scientific information available on the reasonably foreseeable climate change impacts in the February 18, 2010 CEQ memo, Draft NEPA Guidance on Consideration of the Effects of Climate Change and Greenhouse Gas Emissions (CEQ 2010), issued to Federal departments and agencies. As described in Section 6.4.5.2 of the GEIS, the incremental impacts from continued storage on climate change are SMALL for all timeframes at both at-reactor and away-from-reactor storage facilities.

The NRC disagrees that a worst-case scenario should be analyzed in this GEIS, including for climate change impacts. NEPA does not require agencies to conduct a worst-case analysis, but rather to assess the reasonably foreseeable environmental impacts. The NRC used existing information to generically assess impacts by reviewing the evaluations in other GEISs and site-specific EAs and EISs. No changes were made to the GEIS or Rule as a result of this comment.

(163-5-1)

D.2.41.8 – COMMENT: Commenters requested that the NRC consider the additional impacts from uranium fuel cycle activities including mining and enrichment as well as other, more global, nuclear activities in the cumulative impacts analysis in the GEIS. A few commenters requested that the GEIS include an analysis of greenhouse gas emissions from fuel cycle activities. Another commenter requested that the NRC evaluate the impacts of radioactive releases due to continued storage of spent fuel in the context of radioactive releases from other sources (e.g., nuclear weapons testing and natural disasters).

RESPONSE: The NRC disagrees with the comments requesting additional analysis. Uranium fuel cycle impacts that fall within the scope of the GEIS cumulative effects analysis and accident risks of natural disaster events are already evaluated in the GEIS. In addition, other suggested topics for analysis, including radiological doses from weapons testing and other global nuclear activities, would not change impact conclusions or improve the analysis.

Regarding the evaluation of uranium fuel cycle impacts, Section 6.4 of the GEIS examines the cumulative impacts of reasonably foreseeable past, present, and future actions that could have impacts that would overlap in both space and time and accumulate with the impacts from continued storage. Because the analysis of continued storage in the GEIS begins once the operating license of the reactor expires, no additional fuel would be used at that reactor although fuel cycle activities would continue to support other reactors licensed to operate during that same period. Also, the location of fuel cycle facilities, commonly distant from commercial power reactors, limits the potential for the geographic area of many resource impacts to intersect with the geographic scope of the continued storage impacts. Therefore, many fuel cycle impacts were beyond the geographic or temporal scope of the GEIS analysis. Fuel cycle impacts that could overlap with continued storage impacts (e.g., greenhouse gas emissions, waste management, transportation, and accidents) are considered in the applicable cumulative impact analyses (Sections 6.4.5, 6.4.14, 6.4.15, and 6.4.17 of the GEIS). Section 1.8.4 of the GEIS further notes that the impacts of uranium fuel cycle activities are addressed in EISs for power reactors based on data codified in 10 CFR 51.51, Table S-3. In addition, the cumulative impact analysis of accidents in Section 6.4.17 of the GEIS evaluates the risk of accidents caused by extreme natural events such as tornadoes, hurricanes, tsunamis, floods, and earthquakes and concludes that the combined accident risk of all plants at any location within 80 km (50 mi) of a reactor site would be low.

The geographic scope of the cumulative impact assessment is defined in Section 6.4 of the GEIS for each affected resource to encompass (1) the geographic area of the resource and (2) the distances where impacts associated with past, present, and reasonably foreseeable actions may occur. The climate change impact analysis (Section 6.4.5 of the GEIS) is the only cumulative impact analysis in the GEIS that considered a global spatial boundary owing to the potential area of impact associated with greenhouse gas emissions. Nuclear activities are not major sources of greenhouse gas emissions as documented by the comparison of emission sources in Table 6-2 of the GEIS. For the cumulative impacts of both normal and accidental radiological emissions, Sections 6.4.16 and 6.4.17 of the GEIS consider a geographic area of 80 km (50 mi) surrounding the site to evaluate impacts. The NRC has historically used this distance to evaluate releases from nuclear power plants. Therefore, the geographic area is appropriate for evaluating continued storage impacts in the GEIS.

Regarding the potential sources of radiation exposure in the cumulative impact analysis, the NRC quantifies the average public dose from multiple sources of radiation in Table 3-3 of the GEIS. This radiation dose includes a small contribution (i.e., 0.05 percent of the total dose) from the types of industrial emission sources identified by the comment (e.g., nuclear power plants, nuclear industrial, and DOE installations). These and other potential sources of radiological emissions, including nuclear-weapons-test fallout, are not evaluated on a global geographic basis in the GEIS because the contribution of such distant emission sources to the documented average background radiation dose in the affected environment of the GEIS is negligible. No changes were made to the GEIS or Rule as a result of these comments.

(219-9) (250-51-7)

D.2.41.9 – COMMENT: Two commenters argued that the cumulative impact assessment in the GEIS was deficient because it failed to analyze the indirect impacts of continued storage, failed to address mitigation and emergency preparedness, continued to rely on the assumptions in draft Section 1.8.3 of the GEIS, and failed to discuss the potential for a “chilling effect” on economic development in the local area where the storage facility is located. Examples of potential economic effects that were provided included increases in local costs for safety services, and decreases in tax revenue from lack of normal business development and the shutdown of the power plant. In particular, one commenter noted that the analysis of trends in Section 6.3.1 and Table 6-1 of the GEIS does not take into account the chilling effect of continued storage on economic development.

RESPONSE: The NRC agrees in part and disagrees in part with the comments. The NRC agrees that mitigation is not addressed in the GEIS and disagrees with the remainder of the comments. The direct and indirect impacts of continued storage were evaluated in the resource-specific impact analyses contained in Chapters 4 and 5 of the GEIS. The conclusions from these analyses were considered in the resource-specific cumulative impact analyses in Section 6.4 of the GEIS. Additional information regarding mitigation of impacts related to

damaged or degraded fuel has been added to Section 2.2.2.1 of the GEIS. Any determinations by the NRC about whether to require mitigation measures of any type will occur on a site-specific basis during licensing or during the course of ongoing NRC oversight. Additional discussion of mitigation in the context of alternatives is located in D.2.10.1. The GEIS details emergency preparedness and planning in Section 2.1.2.2 (At-Reactor ISFSIs); Section 4.18 (Environmental Impacts of Postulated Accidents); Section 4.19.2 (Terrorism Attacks on ISFSIs); and Appendix F (Spent Fuel Pool Fires). Additional details on emergency preparedness topics related to continued storage facilities are provided in Section D.2.44.4 of this appendix. Comments regarding the assumptions documented in Section 1.8.3 of the GEIS are addressed in Sections D.2.16, D.2.17, D.2.18, D.2.19 of this appendix.

The cumulative socioeconomic impacts evaluated in Section 6.4.2 of the GEIS consider the potential for decreases in tax revenue following shutdown of a power plant as a potentially LARGE socioeconomic impact. The socioeconomic impact analysis does not consider an increase in costs for local safety services as suggested by the comment because the safety services would have been already established for many decades of reactor operations prior to continued storage. The local safety services needed during continued storage would likely remain the same (if other reactors continued to operate) or decrease relative to reactor operations (if no other reactors continued to operate). In addition, as described further in Section D.2.22.3 of this appendix, the NRC concludes that perception-based chilling effects and stigma-related impacts are uncertain or speculative and do not need to be considered in this GEIS.

In response to these comments, changes were made to Section 2.2.2.1 of the GEIS to provide additional discussion of actions that licensees could take, or may be required to take to comply with NRC safety regulations, to mitigate impacts related to damaged or degraded fuel. No changes were made to the Rule as a result of these comments.

(473-10-16) (783-3-10) (783-3-9)

D.2.41.10 – COMMENT: A commenter expressed concern about the potential consequences of accidents at nuclear power plants within the region of the Great Lakes Basin, which constitutes 20 percent of the world's surface fresh water. The commenter was concerned that an accident at any of 60 nuclear power plants, 37 of which are directly in the watershed, could make the water unusable.

RESPONSE: The NRC agrees with the comments in part and disagrees in part. The GEIS cumulative impact analysis evaluates the combined accident risks at multiple power plant and other facility sites in Section 6.4.17 of the GEIS and concludes that the combined risks are low and therefore impacts would be SMALL. Section D.2.41.4 of this appendix describes how unique site-specific environmental characteristics would be addressed during licensing. No changes were made to the GEIS or Rule as a result of these comments.

(327-2-3) (945-1)

D.2.42 Comments Concerning the Cost of Storage

D.2.42.1 – COMMENT: Many commenters requested that the NRC assess and consider all costs associated with nuclear power in the GEIS. Commenters identified a variety of activities and potential events that they associated with nuclear power production that the NRC should include in these cost assessments: uranium mining, spent fuel production, reactor operation, potential accidents, reactor decommissioning, post-decommissioning "clean up," transportation to a repository, development of a repository, and disposal. Many commenters expressed concern regarding the high cost of nuclear power and who does or should assume these costs: licensees, the Federal government, taxpayers, or rate payers. Commenters stated that the cost assessment should include the subsidies related to nuclear power plant construction and operation and the hidden costs such as taxpayers' contribution toward disposal costs and the costs of operation that licensees pass to rate payers. Several commenters stated that nuclear power is neither cost-effective nor sustainable. Several commenters also lamented the high cost of development of a repository and ultimate disposal. One commenter stated that the cost of disposal is worth whatever the cost.

Commenters also stated that waste-management costs are significant (i.e., continued storage and disposal) and should be considered in the costs when comparisons are made between nuclear power and alternative energies. A few commenters recommended ways by which the NRC could assess costs associated with nuclear power or nuclear waste management specifically and stated that the NRC should consider these assessments when making licensing and license renewal determinations. Many commenters also stated that the NRC must specifically assess the costs of continued storage in the GEIS rather than the administrative costs of developing a Rule and GEIS.

RESPONSE: The NRC disagrees with the comments because the comments are outside the scope of the GEIS and Rule. The costs related to the fuel cycle that are not associated with continued storage are evaluated outside of this GEIS and may be included within other EAs. However, in response to the significant interest in costs associated with continued storage of spent fuel, the NRC has provided additional information on estimated costs for some continued storage-related facilities and activities in Chapter 2 of the GEIS. The financial burden of spent fuel storage is addressed in Section D.2.42.2 of this appendix. No changes were made to the Rule as a result of these comments.

(3-4) (30-12-3) (30-21-4) (30-12-8) (39-7) (45-11-5) (64-6) (75-1) (75-5) (143-8) (155-2) (158-2) (163-19-5) (163-28-5) (192-9) (198-5) (244-15-10) (246-24-6) (250-8-5) (295-2) (325-32-6) (329-16-3) (336-12) (341-2-14) (341-1-3) (357-7) (411-3) (507-6) (634-5) (679-3) (686-9) (690-6) (693-1-13) (715-5) (755-1) (856-2) (897-7-13) (919-3-3) (931-1) (938-10)

D.2.42.2 – COMMENT: Many commenters raised several concerns regarding the economic burden that might be placed on society due to the continued storage of spent fuel,

recommended ways to assess these costs, and recommended who should assume these costs. Many commenters expressed concerns that the cost analysis in the draft GEIS evaluated costs associated with the proposed action (Section 1.4 of the GEIS) and its alternatives (Section 1.6 of the GEIS) rather than the costs of continued storage. A few commenters stated that this failure in the draft GEIS is a violation of NEPA and is contrary to the Court of Appeals ruling in *New York v. NRC*.

Several commenters stated that experience has revealed that continued storage could be very expensive and others provided calculations of current and projected future costs of storage, including the cost of dry cask storage at the Prairie Island Nuclear Generating Plant. One commenter expressed the concern that the Prairie Island Nuclear Generating Plant "cost scenario will be repeated across the country and will be in the billions of dollars before the indefinite storage phase begins."

Many commenters raised concerns regarding who will assume the costs of continued storage. Commenters stated concerns that the nuclear industry will eventually be unable to pay the costs of continued storage, unfairly placing the burden on the Federal government and taxpayers. In support, commenters cited shortages in decommissioning funding as evidence of licensees' likely inability to fund continued storage. Others stated that taxpayers are already funding storage because the lack of a repository has resulted in several large court judgments against the DOE to compensate licensees for storage. One commenter stated that eternal funding of continued storage represents a fundamental change to U.S. oversight of nuclear waste (i.e., oversight funds will not be collected from operating nuclear power plants) and will require Congressional action. Two commenters expressed concerns about the Federal government's ability to provide compensation to the public in the event of an accident during continued storage. One commenter stated that the Court of Appeals ruling in *NARUC v. DOE*, in which the court directed DOE to suspend collection of Nuclear Waste Fund fees, signifies that spent fuel will be stored indefinitely and that without the ability to collect fees to fund spent fuel storage, the funds for continued storage will eventually be exhausted.

Commenters offered a variety of recommendations on how to fund continued storage, including that the NRC should require separate funds be set aside for costs of extended storage, electric rates should reflect the costs of continued storage, and U.S. taxpayers funds should be used to subsidize 50 percent of the costs of safe dry casks. One commenter explained a variety of factors that could contribute to licensees' inability to fund continued storage, including that nearly every licensee is a limited liability corporation and that merchant reactors in deregulated markets have difficulty competing with cheaper competitors and thus have a higher probability of failures after cessation of operations. A few commenters also raised concerns regarding the cost of disposal, "clean up," and spent fuel transportation.

RESPONSE: The NRC disagrees with these comments. The NRC is not required to consider the costs of continued storage in this GEIS. However, the NRC notes that its regulatory

structure contains provisions to determine and remain current on the financial qualifications of its reactor licensees in 10 CFR 50.33(f) and to reevaluate these qualifications within 2 years following permanent cessation of operations of the reactor or 5 years before expiration of the reactor license under 10 CFR 50.54(bb). Paragraph 50.54(bb) requires licensees to submit written notification to the Commission for its review and approval of the program by which the licensee intends to manage and provide funding for the management of all irradiated fuel at the reactor following permanent cessation of operation of the reactor until title to the irradiated fuel and possession of the fuel is transferred to the Secretary of Energy. Therefore, the financial plan and financial burden of continuing spent fuel storage is analyzed within the NRC's regulatory framework.

However, in response to the significant interest in this issue expressed by commenters, the NRC has provided additional information on estimated costs for some facilities and activities in Chapter 2 of the GEIS. These cost estimates do not represent an NRC expectation that continued storage costs will occur indefinitely, given the NRC's expectation of repository availability within the short-term timeframe. Instead, this additional data provides a more complete picture of the costs of the facilities and activities that could occur throughout unanticipated but possibly lengthy continued storage. The NRC acknowledges that the cost of storage is significant, particularly with respect to longer timeframes, and therefore understands the strong public interest in disclosure of this information. Accordingly, Chapter 2 provides information applicable to costs of continued storage activities. Furthermore, the NRC acknowledges that, because of delays in the siting and licensing of a repository, the Federal government bears an increasing financial responsibility for spent fuel storage costs, and it may become responsible for paying all the costs associated with spent fuel storage at some time in the future. No changes were made to the Rule as a result of these comments.

For more information on the high cost of storage during the indefinite timeframe see Section D.2.19.1 of this appendix. With respect to the costs of continued storage and the Nuclear Waste Fund, the NRC notes that the funds in the Nuclear Waste Fund were never intended to cover the costs of continued storage; the recent Court of Appeals decision suspending the collection of fees has no effect on the ability of licensees to safely store spent fuel. For more information on funds to cover damages caused by accidents during continued storage see Section D.2.35.33 of this appendix.

The issue of continued storage and tax payments is discussed in Section D.2.22.5 of this appendix. No changes were made to the GEIS or Rule as result of these comments.

(9-3) (30-2-3) (30-8-3) (34-2) (45-4-2) (163-15-9) (163-7-9) (198-7) (202-3) (244-6-5) (245-29-2) (245-42-4) (246-29-3) (246-24-4) (291-3) (325-32-1) (325-32-3) (326-13-2) (326-7-2) (327-30-2) (328-12-5) (328-3-5) (328-3-6) (328-7-6) (328-2-8) (329-12-4) (329-7-5) (377-2-16) (406-4) (410-30) (438-1) (473-12-22) (484-3) (493-3) (524-2) (529-7) (547-1) (547-6) (552-1-27) (555-3) (556-2-10) (556-1-15) (556-2-9) (570-3) (596-1) (603-25) (608-11) (608-12) (611-24) (611-45)

(611-47) (611-56) (615-1) (616-2) (619-1-14) (619-2-4) (619-2-5) (620-10) (640-3) (642-2) (693-4-3) (705-3) (709-2) (711-17) (711-19) (711-20) (713-4) (718-1-4) (724-4) (738-11) (798-2) (818-2) (820-13) (821-11) (826-6) (834-6) (843-2) (851-10) (851-7) (919-2-2) (1003-1)

D.2.42.3 – COMMENT: Several commenters stated concerns that the NRC's funding criteria for decommissioning does not account for short-term, long-term, or indefinite onsite storage of nuclear waste. One commenter stated that the NRC's assumption that the DOE would provide long-term storage is unfounded and particularly unreliable in light of the Court of Appeals' decision in *NARUC v. DOE*. Another commenter recommended that the NRC either include a financial plan for long-term spent fuel storage, or perform a revision to the NRC decommissioning certification of financial assurance to include the financial burden of onsite spent fuel storage. One commenter stated that the NRC has the responsibility to deny licenses to new power plants unless the licensee can demonstrate how it will bear the future costs associated with continued storage.

RESPONSE: The NRC agrees with the comments in part and disagrees in part. The comments are correct that the NRC funding criteria for decommissioning does not account for short-term, long-term, or indefinite onsite storage of nuclear waste. Rather, under 10 CFR 50.54(bb), licensees are required to "submit written notification to the Commission for its review and approval of the program by which the licensee intends to manage and provide funding for the management of all irradiated fuel at the reactor following permanent cessation of operation of the reactor until title to the irradiated fuel and possession of the fuel is transferred to the Secretary of Energy for its ultimate disposal in a repository." Furthermore, the NRC acknowledges that, because of delays in the siting and licensing of a repository, the Federal government bears an increasing financial responsibility for spent fuel storage costs, and may become responsible for paying all the costs associated with spent fuel storage at some time in the future. No changes were made to the GEIS or Rule as a result of these comments.

(127-4) (681-7) (867-3-3)

D.2.42.4 – COMMENT: One commenter stated that dedicated funding should be provided to affected local and State governments to fully participate and independently monitor storage sites.

RESPONSE: The comment is outside the scope of this GEIS. The NRC does not routinely provide funds to local and State governments to cover the costs of independently monitoring spent fuel storage sites. As discussed in Section D.2.34.12 of this appendix, during facility operations the NRC requires licensees to monitor routine and inadvertent radioactive effluents discharged into the environment. NRC licensees are required to have a REMP to quantify the environmental impacts associated with radioactive effluent releases from the licensed facility. In addition, the NRC periodically conducts inspections associated with the facility's SAFSTOR programs, occupational exposure, fire protection, radioactive effluent control, and the site

REMP. SAFSTOR is a method of decommissioning in which a nuclear facility is placed and maintained in a condition that allows the facility to be safely stored and subsequently decontaminated to levels that permit release for unrestricted use. No changes were made to the GEIS or Rule as a result of this comment.

(222-19)

D.2.42.5 – COMMENT: One commenter proposed and applied methods to assess the cost of nuclear waste management, including onsite storage and geologic disposal. The commenter determined that the costs of waste management would significantly change the costs of nuclear power in relation to other power options, making nuclear power a less attractive option, and possibly the least attractive option. The commenter recommended that the NRC assess the costs of nuclear waste management and that the NRC consider these costs as part of its reactor licensing and license renewal determinations. The commenter also disagreed with assumptions made by third parties (e.g., DOE and the U.S. Energy Information Administration) related to the costs of electricity generation and spent fuel disposal and indicated that even with institutional controls in place during the indefinite storage timeframe, sufficient funding for continued storage may not be available. A few other commenters referenced this commenter's comments in their submittals.

RESPONSE: The NRC disagrees with these comments. The NRC is not required to consider the costs of continued storage in this GEIS. Chapter 7 of the GEIS contains a cost-benefit analysis of the proposed action, a rulemaking, and the alternatives to the proposed action discussed in Sections 1.4 and 1.6. Further, the comments' suggestion to consider the costs of continued storage is outside the scope of this Rule and GEIS, which is limited to a review of the environmental impacts of continued storage.

However, the NRC notes that its regulatory structure does contain provisions to determine and remain current on the financial qualifications of its reactor licensees in 10 CFR 50.33(f) and to reevaluate these qualifications at decommissioning under 10 CFR 50.54(bb). Paragraph 50.54(bb) requires licensees to submit written notification to the Commission for its review and approval of the program by which the licensee intends to manage and provide funding for the management of all irradiated fuel at the reactor following permanent cessation of operation of the reactor until title to the irradiated fuel and possession of the fuel is transferred to the Secretary of Energy. Therefore, the financial plan and financial burden of continuing spent fuel storage during decommissioning is already analyzed within the NRC's regulatory framework. Furthermore, the NRC acknowledges that, because of delays in the siting and licensing of a repository, the Federal government bears an increasing financial responsibility for spent fuel storage costs, and it may become responsible for paying all the costs associated with spent fuel storage at some time in the future.

However, in response to the significant interest expressed by comments regarding this issue, the NRC has provided additional information on some estimated costs for some facilities and activities in Chapter 2 of the GEIS. These cost estimates do not represent an NRC expectation that continued storage costs will occur indefinitely, given the NRC's expectation of repository availability within the short-term timeframe. Instead, this additional data provides a more complete picture of the costs of the facilities and activities that could occur throughout unanticipated but possibly lengthy continued storage. The NRC acknowledges that the cost of storage is significant, particularly with respect to longer timeframes, and therefore understands the strong public interest in disclosure of this information. Accordingly, the GEIS provides information applicable to continued storage activities (e.g., Section 2.2.1.3 of the GEIS details the financial costs of at-reactor ISFSIs and Section 2.1.3 of the GEIS provides the cost data for away-from-reactor ISFSIs). Assumptions made by the DOE and U.S. Energy Information Administration related to the costs of electricity generation and spent fuel disposal are out-of-scope of the GEIS. No other changes were made to the GEIS or Rule as a result of these comments.

(551-1) (551-10) (551-11) (551-12) (551-13) (551-14) (551-15) (551-16) (551-17) (551-2) (551-3) (551-4) (551-5) (551-6) (551-7) (551-8) (551-9) (867-3-10) (867-1-2) (867-3-2) (867-3-4) (867-1-5) (867-3-5) (867-3-6) (897-7-5) (897-7-6) (898-4-14) (898-5-18) (898-1-6) (900-1) (900-10) (900-11) (900-12) (900-13) (900-14) (900-15) (900-16) (900-2) (900-3) (900-4) (900-5) (900-6) (900-8) (900-9) (919-2-20) (919-2-4) (919-2-9)

D.2.43 Comments Concerning Decommissioning

D.2.43.1 – COMMENT: The NRC received several comments that expressed concern about spent fuel management and NRC oversight at decommissioned plants. One commenter stated that the NRC has determined that it is no longer necessary to have permanent inspectors onsite during the decommissioning process. Some commenters suggested that spent fuel at decommissioned plants should be transferred from pools to dry casks, some suggested that fuel should be removed from decommissioned plant sites, and others suggested that sites cannot be decontaminated or will become waste facilities for many years.

RESPONSE: The NRC agrees in part and disagrees in part with the comments regarding decommissioning inspections. Unlike facilities with operating reactors, decommissioning reactor sites do not have resident inspectors (i.e., inspectors assigned to an operating nuclear plant to carry out the inspection program on a day-to-day basis). However, numerous inspections occur during the decommissioning period of a reactor site. These inspections include, but are not limited to, spent fuel pool safety, decommissioning activities, ISFSIs if the site has an ISFSI, and physical security. Inspections are generally scheduled during periods of higher risk activities, and during and after remediation activities. Also, as part of decommissioning inspections, the NRC conducts independent radiological measurements to confirm licensee radiological survey methodologies.

The NRC agrees in part and disagrees in part, with the comments suggesting that sites cannot be decontaminated or will become waste facilities for many years. The NRC agrees that part of the decommissioning and decontaminating process at reactor sites involves addressing the long-lived nature of some of the radionuclides present at the sites, and also agrees with the general concept that decontaminating one site can result in contaminating another site (i.e., disposal of contaminated material in landfills and hazardous waste facilities). However, this situation is not unique to the nuclear industry. For example, disposing of unwanted chemicals and cleaners from a house-hold cabinet or contaminated soil from a leaking chemical tank could contaminate a landfill or hazardous waste facility. With respect to whether sites can be decommissioned, 11 power reactors have had their reactor licenses either terminated and the sites released for unrestricted use under 10 CFR Part 20, Subpart E or reduced to the area housing the ISFSI if the site has spent fuel in dry storage. Unrestricted use means the NRC has no limitations on the owner's future use of the property.

Section D.2.50.1 of this appendix responds to comments concerning the expedited transfer of spent fuel from wet to dry storage. Section D.2.37.7 responds to comments concerning the timing of a repository for the spent fuel. Section D.2.37.1 responds to comments concerning the feasibility of a repository for the spent fuel. No changes were made to the GEIS or Rule as a result of these comments.

(245-10-2) (250-29-8) (329-12-8) (433-2) (510-1) (826-13) (826-17) (933-3) (934-2)

D.2.43.2 – COMMENT: A few commenters stated that decommissioning should be a priority and raised concerns about the costs of decommissioning and whether adequate funding or plans will be available to provide for decommissioning. One commenter questioned the adequacy of funding for the storage of spent fuel.

RESPONSE: These comments are outside the scope of the GEIS and Rule. Decommissioning planning is an important part of the operational and post-operational periods of a nuclear power plant. Under 10 CFR 20.1501, operating reactor licensees are required to conduct surveys of areas, including the subsurface (i.e., soils and groundwater), that licensees subsequently use to assist in developing plans for decommissioning. For power reactor licensees, required decommissioning related plans include the licensee-developed Post-Shutdown Decommissioning Activities Report and License Termination Plan.

The NRC disagrees with the comments related to decommissioning funding. The NRC has determined that reasonable assurance of decommissioning funding is necessary to ensure the adequate protection of public health and safety. Decommissioning funding is an obligation that is taken on by a licensee when an NRC license is issued. Pursuant to 10 CFR 50.75(b), a reactor licensee is required to provide decommissioning funding assurance by one or more of the methods described in 10 CFR 50.75(e) as determined to be acceptable to the NRC. In addition, the NRC has a comprehensive, regulation-based decommissioning funding oversight

program in place to provide reasonable assurance that sufficient funds will be available for decommissioning and radiological decontamination for each U.S. commercial nuclear facility to meet NRC standards and regulations.

The NRC disagrees with the comment related to spent fuel storage funding. Pursuant to 10 CFR 50.54(bb), "For nuclear power reactors licensed by the NRC, the licensee shall, within 2 years following permanent cessation of operation of the reactor or 5 years before expiration of the reactor operating license, whichever occurs first, submit written notification to the Commission for its review and preliminary approval of the program by which the licensee intends to manage and provide funding for the management of all irradiated fuel at the reactor following permanent cessation of operation of the reactor until title to the irradiated fuel and possession of the fuel is transferred to the Secretary of Energy for its ultimate disposal in a repository. In addition, pursuant to 10 CFR 72.22(e)(2), an applicant for a specific license for an ISFSI must provide information that shows that the applicant either possesses the necessary operating funds or that the applicant has reasonable assurance of obtaining the necessary operating funds for the planned life of the ISFSI. Finally, the NRC notes that, because of delays in the siting and licensing of a repository, the Federal government bears an increasing financial responsibility for spent fuel storage costs, and may become responsible for paying all the costs associated with spent fuel storage at some time in the future. No changes were made to the GEIS or Rule as a result of these comments.

(481-2) (526-2) (611-46) (704-8) (900-7)

D.2.43.3 – COMMENT: Two commenters raised concerns related to ownership and responsibility for spent fuel post-decommissioning. One commenter raised concerns that the GEIS states that the Federal government's policy for disposal is to construct a deep geologic repository, but that the GEIS should provide further explanation of the ownership and responsibility for spent fuel post-decommissioning. Another commenter stated the mission of the Decommissioning Plant Coalition and stated that the Federal government's continued failure to remove spent fuel from decommissioned reactor sites is an unacceptable public policy.

RESPONSE: The NRC disagrees with the comment that the GEIS should provide further explanation of the ownership and responsibility for spent fuel post-decommissioning and neither agrees nor disagrees with the remainder of the comments. The ownership and responsibility for spent fuel post-decommissioning remains with the licensee until the title of the irradiated fuel and possession of the fuel is transferred to the Secretary of Energy for its ultimate disposal in a repository. No changes were made to the GEIS or Rule as a result of these comments.

(622-1-9) (637-3)

D.2.43.4 – COMMENT: The NRC received one comment that suggested decommissioning nuclear power plants would increase employment while simultaneously spurring both innovation and training in the field of robotics.

RESPONSE: The NRC neither agrees nor disagrees with the comment. Although operating power reactors have hundreds of workers, as identified in Section 6.4.2.2 of the GEIS, the NRC has estimated that between 100 and 200 workers would be needed to support nuclear power plant decommissioning. No changes were made to the GEIS or Rule as a result of this comment.

(327-44-3)

D.2.44 Comments Concerning Emergency Planning

D.2.44.1 – COMMENT: Several commenters asked the NRC to expand emergency planning zones, and some commenters requested up to 80 km (50 mi), citing the evacuation zone the U.S. government recommended for Americans in the area of the Fukushima Dai-ichi nuclear accident in Japan (DOS 2011). Commenters also asked the NRC to include the public in the preparation of emergency plans.

RESPONSE: The NRC disagrees with the comments. To the extent that comments were focused on emergency planning for reactor events, such events are outside the scope of the GEIS and Rule, which concerns the evaluation of the environmental impacts of the continued storage of spent fuel, not reactor operations.

The sizes of the emergency planning zones are established in the NRC regulations. See 10 CFR 50.47(c)(2) and 10 CFR Part 50, Appendix E, Section I, Paragraph 3. Changes to these requirements can be requested through a petition for rulemaking—see 10 CFR 2.802. However, the NRC recently denied a petition for rulemaking that requested changes to the emergency planning zones (79 FR 19501). In denying the petition for rulemaking, the NRC concluded that the current size of emergency planning zones is appropriate for existing reactors and that emergency plans will provide an adequate level of protection of the public health and safety in the event of an accident at a nuclear power plant. The NRC also concluded that the current emergency planning zones provide for a comprehensive emergency planning framework that would allow expansion of the response efforts beyond the designated distances should events warrant such an expansion.

For a new facility, the development of the emergency plan is part of the licensing process and members of the public can participate through any associated public meetings and, more formally, through the hearing process. No changes were made to the GEIS or Rule as a result of these comments.

(250-64-1) (250-11-4) (250-40-5) (250-40-6) (552-2-5) (552-2-9) (785-1) (826-8)

D.2.44.2 – COMMENT: Several commenters stated concerns about the adequacy of offsite emergency preparedness for continued storage of spent fuel. Specific concerns were raised about the condition of local bridges, the inability to evacuate high-population areas or areas with traffic congestion in a timely manner, and coordinating movements of people away from plumes of airborne contamination. Several commenters raised specific concerns about emergency preparedness in areas surrounding specific facilities. One commenter raised specific concerns about the location of the Indian Point facility and stated that the NRC acknowledged that Indian Point is poorly located. Several commenters cited the nuclear accident at Fukushima Dai-ichi as one of the bases for their concerns. One commenter suggested that the NRC develop "its own version of a SWAT team, which should be fully funded by the industry" to improve emergency preparedness.

RESPONSE: The NRC disagrees with the comments. To the extent that comments were focused on emergency planning for reactor events, such events are outside the scope of the GEIS and Rule, which concerns the evaluation of the environmental impacts of the continued storage of spent fuel, not reactor operations.

NRC regulations require reactor and ISFSI licensees to establish and maintain emergency plans. See, for example, 10 CFR 50.47 and 10 CFR 72.32. Each plan must be reviewed and approved by the NRC. The offsite response to an emergency involves coordination between the licensee, State and local agencies involved in the plan, and Federal agencies. In the event of an emergency, State and local emergency response organizations provide information to the public about the emergency and the associated response.

For the storage of spent fuel, the NRC considers a range of possible accidents, including internal events (e.g., partial or complete loss of pool inventory) and external events (e.g., floods, tornadoes, and earthquakes). If a significant event were to occur at a nuclear plant, the NRC has its own emergency response plans in place. Although not referred to as a SWAT team, one part of such a response can include dispatching an NRC team to the site to monitor the licensee's response and to help coordinate the response by the NRC in the associated regional office and NRC headquarters. The NRC can also call upon the resources of the entire Federal government as necessary when responding to an event.

See SectionD.2.36.16 of this appendix for additional information. No changes were made to the GEIS or Rule as a result of these comments.

(30-14-2) (69-2) (114-2) (163-27-2) (163-16-4) (163-16-5) (163-20-8) (230-3) (246-24-1) (246-3-4) (284-7) (325-12-3) (326-47-1) (327-27-4) (327-27-5) (351-2) (410-10) (552-2-12) (556-5-4) (623-2) (703-3) (710-3) (733-1) (764-5) (783-3-8) (785-3) (840-11) (850-1) (910-10)

D.2.44.3 – COMMENT: Several commenters stated concerns that the NRC may grant exemptions from some emergency plan requirements, like evacuation planning, once a plant permanently ceases operations. One commenter cited a 2013 exemption request by one licensee for a recently shutdown plant as an example of these possible exemptions (DEK 2013b). Some commenters stated that the plans will be needed and should be maintained indefinitely. One commenter expressed concern about the growing population density around certain plants as time passes, and how that might affect evacuation plans. Another commenter stated that rather than grant exemptions, the NRC should consider 50-mi emergency planning zones. Finally, another commenter asked that the NRC expedite transfer of the spent fuel from the spent fuel pools to dry casks before considering exemptions to relax the emergency planning requirements at a plant.

RESPONSE: The NRC agrees with the comments in part, and disagrees in part. The NRC agrees that exemptions from emergency planning requirements have historically been granted on a case-by-case basis for decommissioning facilities. Because the exemptions to emergency planning requirements had been granted prior to the issuance of NUREG–1738, *Technical Study of Spent Fuel Pool Accident Risk at Decommissioning Nuclear Power Plants* (NRC 2001b), the NRC conducted a review all of the previously issued exemptions. The NRC conducted this review because of the conclusion in NUREG–1738 that a zirconium fire cannot be generically dismissed based on the age of the spent fuel. Based on its review, the NRC determined that the previously granted exemptions did not present an "undue risk to the public health and safety given the long time periods available to support implementation of protective measures on an ad hoc basis for [spent fuel pool] accidents. Specifically, because of the long spent fuel decay times at currently decommissioning plants, a zirconium fire cannot occur for an extended period of time (at least 10 hours), if it could occur at all, even under the worst-case adiabatic heatup assumptions (no heat transfer of any kind from the fuel assemblies)." (NRC 2001d).

The NRC has issued draft ISG NSIR/DPR-ISG-02 (NRC 2013t) to provide guidance to staff reviewing any future requests for exemption from emergency planning requirements. While the ISG is not yet final, it explains how the NRC intends to approach these exemption requests. For an exemption to emergency planning requirements to be granted, licensees must first prove, with a site-specific analysis, that a design basis accident will not result in an offsite radiological release that exceeds the EPA Protective Action Guidelines at the site boundary, or that for a beyond-design-basis accident there is sufficient time to initiate appropriate mitigating actions by the licensee and for offsite agencies to take protective actions for the public under an "all-hazards" plan.

See Section D.2.36.16 of this appendix for additional information related to exemptions. The comment that the NRC should consider 50-mi emergency planning zones is outside the scope of the GEIS and Rule, the purpose of which is to determine whether the environmental impacts of continued storage can be assessed generically and, if so, to codify the GEIS at 10 CFR

51.23. See Section D.2.44.1 of this appendix for additional information. The issue of expedited transfer of spent fuel from pools to dry casks is also outside the scope of the GEIS and Rule; see Section D.2.50.1 of this appendix. No changes were made to the GEIS or Rule as a result of these comments.

(9-4) (348-9) (352-9) (373-9) (377-6-3) (419-9) (648-12) (826-22) (919-4-1)

D.2.44.4 – COMMENT: Two commenters stated that the GEIS should describe the emergency preparedness and response requirements for ISFSIs.

RESPONSE: The NRC disagrees with the comments. The NRC did rely on the implementation of its regulatory requirements (e.g., those for emergency plans) when it prepared the GEIS even though the NRC is not required to describe those safety requirements as part of this environmental review. The NRC evaluates an applicant's emergency plan as part of site-specific reactor and specifically licensed ISFSI reviews and during periodic inspections for licensed facilities. However, the following is provided to address concerns raised in this comment.

The requirements for emergency preparedness for ISFSIs are addressed under either 10 CFR 50.47 (for a general license) or 10 CFR 72.32 (for a specific license). Licensees are required to take actions to maintain the effectiveness of their emergency plans and the NRC evaluates the licensee's performance in emergency preparedness under the NRC's inspection program – see for example Inspection Manual Chapter (IMC) 2690, Inspection Program for Dry Storage of Spent reactor Fuel at ISFSIs and for 10 CFR Part 71 Transportation Packagings (NRC 2012p). See Sections D.2.44.2 and D.2.44.5 of this appendix for additional information. No changes were made to the GEIS or Rule as a result of these comments.

(328-2-5) (783-2-16)

D.2.44.5 – COMMENT: One commenter stated that local tax payments by Prairie Island Nuclear Generating Plant have declined greatly over the years, which has adversely affected public safety services required to satisfy the offsite emergency preparedness plan. The commenter stated that the city of Red Wing, Minnesota is obligated to maintain the necessary police, fire, and other emergency personnel, equipment, and facilities to respond in a timely and meaningful fashion. The city is obligated under the NRC and the State of Minnesota regulations to provide reasonable assurance that it can meet the emergency preparedness plan for the Prairie Island Nuclear Generating Plant, and accompanying ISFSIs.

RESPONSE: The NRC disagrees with the comment. To the extent that comments were focused on emergency planning for reactor events, such events are outside the scope of the evaluation of the impacts of continued storage of spent fuel.

The comment expressed concern about the ability of offsite organizations to support the emergency plan. Offsite organizations, such as those mentioned in the comment, participate in an exercise every 2 years and are evaluated by the Federal Emergency Management Agency. Federal Emergency Management Agency assesses the capabilities of State and local offsite emergency preparedness organizations in implementing their radiological emergency response plans and procedures to protect the public health and safety during a radiological emergency. See http://www.nrc.gov/about-nrc/emerg-preparedness/related-information/fema-after-action-reports.html for the most recent Federal Emergency Management Agency assessments for a given facility. No changes were made to the GEIS or Rule as a result of this comment.

(328-2-2)

D.2.45 Editorial Comments on the *Federal Register* Notice

D.2.45.1 – COMMENT: One commenter suggested that the information in the SOC be rearranged. The commenter felt that the present organization is unclear, ineffective, and confusing. The commenter stated that the Supplementary Information section is more appropriately placed after the Rule language, which the commenter viewed as the essential information. The commenter also noted that the Table of Contents in the SOC did not contain page numbers and is only applicable to the Supplementary Information section of the *Federal Register* Notice.

RESPONSE: The NRC disagrees with the comment. The NRC cannot change the order or format of information in a *Federal Register* Notice. The order of information provided in a rule and the format of the rule is established by the Office of the *Federal Register*. No changes were made to the GEIS or Rule as a result of this comment.

(603-20)

D.2.45.2 – COMMENT: One commenter requested clarification of a statement in Question A1 of the proposed Rule SOC. The commenter requested that the statement "(T)he analysis in the GEIS provides a regulatory basis for the proposed rule" be clarified to convey that the NRC envisions that DTSs and ISFSIs would require rebuilding at some point either at reactors or away from reactors and that 100 years is being used as a reasonable analytical surrogate while research continues. The commenter noted that this change would also improve the validity of the statement "(T)he analyses in the GEIS are based on current technology and regulation."

RESPONSE: The NRC disagrees with the comment. The GEIS does provide the regulatory basis for the Rule. The GEIS contains a number of assumptions, one of which is that the casks would be changed out every 100 years and a new storage pad and DTS would be built to facilitate the transfer. It is not a requirement that such transfer occur every 100 years. It is conceivable that casks can safely contain spent fuel for much longer periods; it is also possible

that in some cases transfer might need to occur sooner. For purposes of analyzing the environmental impacts of continued storage, the NRC assumes that licensees continue to use current technology and regulations; any actual transfer will be based on the technology and regulations in place at the time the transfer occurs. No changes were made to the GEIS or Rule as a result of this comment.

(637-9)

D.2.45.3 – COMMENT: One commenter requested that all NRC language use standard definitions and provided the terms “confidence” and “spent” as examples where the NRC’s use of the terms was misleading and unacceptable.

RESPONSE: The NRC does not intend to mislead anyone with the use of terminology. Terminology used by the NRC is sometimes unique to the NRC and the nuclear energy community and may not reflect common usage and definitions. Historically the term “confidence” has been used to express the belief or confidence that a repository will be available for the disposal of spent fuel. Spent nuclear fuel is defined in 10 CFR Part 72 and refers to fuel that has been withdrawn from a nuclear reactor following irradiation. The term spent fuel or spent fuel is in common use in the nuclear energy community. No changes were made to the GEIS or Rule as a result of these comments.

(910-3) (910-4)

D.2.45.4 – COMMENT: Commenters requested that the rulemaking package contain information on Yucca Mountain and the recent Court of Appeals ruling issuing the writ of mandamus to restart the licensing process. One commenter stated that in the interest of openness and transparency the SOC and GEIS should recognize the recent decision of the Court of Appeals that ordered the NRC to restart the licensing review on Yucca Mountain and the NRC’s statement that it will complete the safety evaluation report. The commenter stated that the rulemaking package should recognize that the completion and operation of a repository at Yucca Mountain continues to be required by the NWPA. The commenter also suggested that a statement be added to the SOC to reflect that “the Yucca Mountain license application and NRC staff review of that application have shown a safe repository to be technically feasible.” Another commenter suggested that the GEIS acknowledge the political difficulties of licensing a HLW repository. One commenter suggested that the Yucca Mountain proceeding be included as an “area of controversy” in the GEIS because the commenter believes that the NRC’s decision to terminate the Yucca Mountain proceeding led to the lawsuit that resulted in the remand of the 2010 Waste Confidence Decision.

RESPONSE: The NRC agrees with the comments in part and disagrees in part. The Yucca Mountain review was mentioned in the discussion on repository feasibility in the draft GEIS (page B-3). Additional information on the Yucca Mountain review status has been added to

Appendix B of the final GEIS. Although the NWPA requires consideration of a national repository at Yucca Mountain, it would be inappropriate for the NRC to assume the operation of a repository at Yucca Mountain. The NRC has not yet completed its review of the Yucca Mountain application; therefore, final conclusions have not been made regarding the suitability of Yucca Mountain as a repository. In addition, it is unclear how the DOE will proceed in regards to Yucca Mountain. The NRC has recognized and acknowledges the political uncertainty and difficulties in siting and licensing a geologic repository and has addressed this in Appendix B of the GEIS. Additional discussion of this issue is provided in Section D.2.37.6 of this appendix. The NRC also acknowledges that the Yucca Mountain repository licensing process and related events are a general area of controversy for the agency. However, the description of areas of controversy in Section ES.19 of the GEIS Executive Summary is applicable to substantive areas within the scope of the GEIS. Because the Yucca Mountain licensing review is not within the scope of the GEIS, the NRC does not believe that a separate listing for Yucca Mountain as an area of controversy is necessary. No changes were made to the Rule as a result of these comments.

(544-15) (544-16) (544-21) (544-8) (544-9) (619-1-13)

D.2.46 Editorial Comments on the GEIS

D.2.46.1 – COMMENT: Some commenters asked whether the NRC made a mistake in the GEIS's description of when the site-specific analysis is performed for the storage of spent fuel during operations.

RESPONSE: The description is not in error. The site-specific NEPA analysis performed for licensing or relicensing is valid through the term of the license whether the reactor is operating or not. Unless the NRC authorizes a change in the licensed activities that would require additional NEPA analyses, no new site-specific NEPA analysis will be performed until that license expires or is renewed. The GEIS addresses only the period after the initial operating license ends, also described as the licensed life for operation. No changes were made to the GEIS or Rule as a result of these comments.

(836-37) (930-2-11)

D.2.46.2 – COMMENT: Several commenters suggested editorial changes to the GEIS including corrections of typographical errors, dates of references, and suggested wording changes.

RESPONSE: The NRC made changes to the GEIS as necessary in response to these editorial comments. No changes were made to the Rule as a result of these comments.

(544-25) (694-3-22) (697-3-3) (783-2-22) (910-13) (919-4-15) (919-7-16) (919-2-18) (919-5-19)

D.2.46.3 – COMMENT: One commenter stated there were no definitions in the Index (Chapter 10) of the GEIS.

RESPONSE: A glossary has been added to the GEIS as a new Chapter 11. No changes were made to the Rule as a result of this comment.

(910-14)

D.2.46.4 – COMMENT: A commenter suggested that the number of spent fuel pool workers (15–85) listed in Section 4.3.1 of the draft GEIS, should be consistent the number of workers listed in Section 4.2.1 of the draft GEIS (i.e., 20–85).

RESPONSE: The NRC agrees with this comment. The text in Section 4.3.1 of the GEIS has been revised from 15–85 to 20–85 workers in response to this comment. No changes were made to the Rule as a result of this comment.

(827-7-18)

D.2.47 Comments Concerning Opposition to Rule or GEIS

D.2.47.1 – COMMENT: Many commenters stated general opposition to the GEIS and Rule. Commenters generally opposed the generic approach, assumptions, and analysis in the GEIS and Rule. Some commenters generally stated that the rulemaking violated NEPA, AEA, and the NWPA. Other commenters generally opposed the rulemaking because it does not address disposal of spent fuel.

RESPONSE: The NRC acknowledges the comments opposing the GEIS and Rule. General concerns cited in the comments opposing the GEIS or Rule are addressed in more detail throughout this appendix, including the feasibility of safe storage in Section D.2.38, the feasibility of geological disposal in Section D.2.37, GEIS assumptions and analysis in Section D.2.16, spent fuel pool leaks in Section D.2.40, spent fuel pool fires in Section D.2.39, accidents in Sections D.2.35 and D.2.51, security and terrorism in Section D.2.36, generic versus site-specific analysis in Section D.2.11, and environmental justice in Section D.2.23.

The NRC disagrees with comments that the rulemaking violated NEPA, AEA, and the NWPA. The Commission makes a good-faith effort to comply with applicable requirements, and individuals who believe that the Commission's actions are not in accordance with law can seek judicial review of the Commission's actions. The rulemaking addresses the environmental impacts of spent fuel storage beyond the licensed life of a reactor and prior to disposal, therefore the rulemaking does not address disposal of spent fuel. No changes were made to the GEIS or Rule as a result of these comments.

(21-3) (30-17-1) (30-17-2) (30-17-4) (30-12-9) (36-1) (39-3) (45-12-2) (45-6-2) (45-6-4) (45-8-5) (45-12-8) (45-12-9) (52-1) (52-4) (59-16) (59-2) (59-4) (89-2) (102-4) (112-34-1) (112-5-11) (112-34-2) (112-18-3) (112-34-4) (112-35-4) (112-8-4) (112-15-5) (112-2-5) (112-24-6) (130-1) (144-3) (147-2) (163-1-1) (163-12-1) (163-13-1) (163-2-1) (163-33-1) (163-36-1) (163-34-10) (163-7-2) (163-9-2) (163-31-3) (163-34-3) (163-42-3) (163-15-4) (163-37-4) (163-48-6) (163-1-7) (163-34-7) (163-1-8) (166-1) (170-1) (172-1) (174-1) (174-5) (174-8) (175-1) (185-1) (193-1) (196-1) (202-1) (204-3) (205-1) (205-15) (205-18) (205-5) (209-1) (218-10) (218-2) (219-11) (219-12) (219-4) (221-1) (221-3) (244-15-11) (244-15-12) (244-6-2) (244-3-4) (244-8-5) (245-30-1) (245-6-1) (245-19-11) (245-3-2) (245-41-2) (245-47-2) (245-45-3) (245-10-4) (245-7-4) (245-14-5) (245-24-5) (245-3-5) (245-19-6) (245-19-8) (245-29-8) (245-14-9) (246-16-1) (246-17-1) (246-22-1) (246-7-2) (246-2-4) (246-25-4) (246-13-5) (246-9-7) (246-2-8) (249-1) (249-14) (249-3) (250-16-1) (250-59-1) (250-63-1) (250-23-2) (250-31-2) (250-34-2) (250-42-2) (250-48-2) (250-5-3) (250-8-3) (250-28-4) (250-51-4) (250-63-5) (250-28-6) (250-64-6) (250-1-7) (250-5-9) (251-4) (256-2) (256-3) (256-5) (256-7) (264-1) (267-1) (268-1) (274-2) (274-6) (276-10) (276-6) (277-1) (277-3) (282-5) (284-12) (284-2) (287-2) (287-7) (303-17) (303-2) (303-6) (304-3) (305-1) (309-2) (314-2) (319-11) (319-3) (325-12-1) (325-19-1) (325-19-6) (325-29-8) (325-31-8) (326-58-1) (326-61-1) (326-9-1) (326-15-2) (326-55-2) (326-64-2) (326-8-2) (326-19-4) (326-4-6) (326-8-7) (327-11-1) (327-2-1) (327-27-1) (327-39-1) (327-17-2) (327-11-3) (327-18-3) (327-11-6) (328-11-1) (328-12-1) (328-13-3) (328-9-3) (328-1-7) (328-3-7) (328-14-8) (328-16-8) (329-17-1) (329-7-2) (329-28-5) (330-1) (331-2) (339-4) (341-1-1) (341-2-17) (341-1-6) (341-1-7) (348-12) (348-5) (351-1) (352-12) (352-5) (358-1) (358-10) (361-4) (363-1) (370-1) (373-12) (373-5) (377-1-1) (377-2-14) (377-1-5) (381-4) (404-1) (406-1) (410-1) (417-12) (417-2) (422-1) (423-4) (426-1) (431-16) (433-1) (433-5) (435-2) (443-1) (443-11) (443-8) (445-2) (447-2-10) (447-2-18) (447-1-2) (447-2-6) (447-1-9) (453-7) (454-3) (472-4) (473-4-3) (473-16-5) (475-1) (490-4) (490-8) (491-3) (492-4) (495-7) (501-5) (505-2) (517-1) (517-4) (528-1) (531-1-1) (531-2-1) (531-1-10) (531-2-10) (531-1-13) (531-1-15) (531-2-23) (531-2-25) (531-1-9) (531-2-9) (537-4) (537-9) (540-1) (540-3) (540-9) (542-1) (543-2) (547-5) (552-1-1) (552-1-15) (552-2-28) (556-1-1) (556-5-11) (556-1-4) (556-1-5) (556-1-8) (556-1-9) (559-1) (579-1) (603-19) (603-2) (603-5) (603-8) (604-1) (607-1) (607-7) (608-3) (611-38) (611-6) (611-61) (612-7) (617-1) (618-1) (618-13) (618-5) (620-1) (620-11) (620-4) (621-1) (622-1-1) (622-4-13) (622-1-6) (623-4) (629-1) (646-23) (648-1) (648-13) (651-3) (652-4) (652-6) (662-8) (665-2) (669-18) (669-2) (680-3) (686-21) (686-6) (687-6) (687-8) (691-1) (691-12) (691-14) (691-4) (691-6) (692-18) (693-1-1) (693-2-1) (693-3-10) (693-2-11) (693-2-12) (693-1-14) (693-3-2) (693-1-3) (693-2-5) (693-1-8) (693-1-9) (699-1) (699-3) (700-7) (701-6) (702-1) (703-13) (704-11) (704-2) (704-7) (706-1-1) (706-1-2) (708-7) (710-24) (711-1) (711-24) (711-5) (713-2) (714-2-7) (714-1-9) (716-1) (716-11) (716-23) (716-4) (716-8) (719-1) (720-2) (720-3) (722-4) (722-6) (723-1) (723-5) (724-1) (728-2) (730-1) (731-1) (732-1) (734-1) (735-1) (738-17) (739-1) (744-2) (757-3) (762-6) (763-1) (764-1) (774-2) (775-1) (791-1) (803-1) (811-3) (815-1) (815-9) (816-1) (816-4) (819-1) (819-15) (819-3) (819-4) (821-14) (823-13) (823-17) (823-55) (823-60) (823-62) (823-69) (823-75) (826-1) (826-3) (832-1) (836-2) (836-6) (836-64) (836-69) (836-8) (838-6) (840-1) (840-7) (840-9) (844-1) (846-1) (849-2) (851-12) (851-14) (851-2) (862-1) (865-1) (867-3-18) (867-3-33) (868-2)

(872-1) (887-4) (888-1) (897-1-19) (897-7-22) (897-2-6) (907-2) (908-6) (910-15) (910-2) (912-1) (919-1-1) (919-1-19) (919-3-4) (919-3-7) (919-5-7) (920-43) (920-9) (921-2) (923-1) (926-2) (930-1-1) (930-3-16) (930-3-21) (930-3-5) (934-4) (935-8) (936-2) (937-28) (937-30) (939-1) (941-1) (943-1) (944-1) (944-10) (944-2) (944-4) (951-6) (1004-4) (1004-7)

D.2.48 Comments Concerning Support for Rule or GEIS

D.2.48.1 – COMMENT: Commenters expressed general support for the Waste Confidence Rule and GEIS, the generic approach of the rulemaking, and the NRC's conclusions regarding the environmental impacts of continued storage of spent fuel, and the feasibility of safe continued storage and geologic disposal in a repository.

RESPONSE: The NRC acknowledges the comments supporting the GEIS or Rule. No changes were made to the GEIS or Rule as a result of these comments.

(7-1) (30-7-5) (41-1) (45-2-1) (45-14-2) (45-2-4) (45-2-5) (45-5-6) (45-2-7) (45-9-8) (45-2-9) (96-1) (112-1-1) (112-19-1) (112-27-1) (112-19-2) (112-28-2) (112-12-3) (112-19-3) (112-1-4) (112-19-4) (112-19-5) (118-4) (138-11) (152-3) (163-11-1) (163-30-1) (163-17-2) (163-38-3) (163-11-6) (180-6) (181-1) (181-6) (183-1) (183-6) (192-1) (192-15) (192-2) (199-1) (201-4) (201-6) (244-1-2) (244-11-2) (244-12-7) (244-9-9) (245-20-2) (245-23-3) (245-16-4) (245-33-4) (245-20-7) (246-21-1) (246-4-1) (246-10-2) (246-21-2) (246-14-4) (246-4-4) (246-21-5) (246-10-7) (246-18-7) (250-24-1) (250-25-1) (250-27-1) (250-43-1) (250-56-1) (250-70-1) (250-6-2) (250-62-2) (250-19-3) (250-25-3) (250-36-3) (250-56-3) (250-61-3) (250-67-3) (250-15-4) (250-37-4) (250-4-4) (250-3-5) (250-41-5) (250-37-6) (250-57-6) (250-62-6) (250-70-6) (250-35-7) (250-58-7) (262-1) (273-2) (313-3) (325-17-1) (325-18-4) (325-32-4) (326-18-1) (326-41-3) (327-12-1) (327-17-1) (327-19-1) (327-28-1) (327-31-1) (327-12-4) (327-28-5) (327-31-6) (328-5-11) (328-5-14) (328-10-2) (328-10-5) (329-2-1) (374-1) (383-1) (388-1) (398-1) (399-1) (400-1) (456-1) (461-1) (466-1) (534-1) (534-2) (535-4) (555-1) (637-1) (638-1) (672-3) (682-1) (683-1) (685-4) (694-1-1) (694-2-1) (694-1-10) (694-2-10) (694-2-12) (694-1-2) (694-1-5) (694-2-5) (694-2-6) (697-1-1) (697-1-12) (697-1-13) (697-1-14) (697-1-18) (697-1-2) (697-1-22) (697-1-23) (697-1-29) (697-1-6) (697-3-7) (745-2) (753-1) (802-1) (808-2) (808-3) (825-1) (827-1-12) (827-5-4) (827-5-5) (827-1-6) (827-2-9) (841-1) (863-5) (863-7) (942-10) (942-2) (948-4)

D.2.48.2 – COMMENT: Two companies who each operate multiple nuclear power plants submitted comments stating that the generic analysis of the GEIS is appropriate and applicable to certain nuclear power plants.

RESPONSE: The NRC acknowledges the comments supporting the analysis in the GEIS. No changes were made to the GEIS or Rule as a result of these comments.

(694-3-10) (694-1-11) (694-3-11) (694-2-14) (694-3-14) (694-2-15) (694-2-16) (694-2-17) (694-2-18) (694-2-2) (694-2-21) (694-3-21) (694-2-22) (694-2-27) (694-2-29) (694-1-3) (694-2-3)

(694-2-4) (694-3-6) (694-2-7) (694-2-8) (694-3-8) (694-1-9) (694-2-9) (697-2-1) (697-4-1) (697-1-10) (697-1-11) (697-1-15) (697-2-17) (697-1-19) (697-2-19) (697-3-2) (697-4-2) (697-1-20) (697-2-20) (697-1-21) (697-1-24) (697-1-25) (697-1-26) (697-1-3) (697-2-3) (697-1-31) (697-1-4) (697-2-4) (697-2-5) (697-3-6) (697-2-7) (697-3-8) (697-1-9) (697-2-9)

D.2.49 Out-of-Scope Comments – General

D.2.49.1 – COMMENT: One commenter stated that prior to conducting siting activities for a permanent repository, the EPA should conduct a rulemaking process to develop new standards regarding spent fuel disposal.

RESPONSE: The environmental impacts of spent fuel disposal and any standards or regulations governing disposal are beyond the scope of the GEIS and Rule. No changes were made to the GEIS or Rule as a result of this comment.

(646-7)

D.2.49.2 – COMMENT: Commenters criticized Table S-3, Table of Uranium Fuel Cycle Environmental Data, contained in 10 CFR Part 51. Commenters stated that Table S-3 was incorrect, obsolete, invalid, inadequate, contained omissions, violated NEPA, and should be re-analyzed through a rulemaking. Some commenters objected to Table S-3's zero-release assumption regarding the disposal of spent fuel in a geologic repository, and said that the NRC must prepare a new analysis in the context of the Waste Confidence Decision. One commenter stated that there are inconsistencies between the conclusions of Table S-3 and Table B-1, Summary of Findings on NEPA Issues for License Renewal of Nuclear Power Plants. Another commenter requested that the NRC analyze the health effects of uranium mining.

RESPONSE: The NRC disagrees with the comments. The environmental impacts of portions of the uranium fuel cycle that occur before new fuel is delivered to the plant and after spent fuel is sent to a disposal site have been evaluated and are codified in 10 CFR 51.51, Table S–3. The environmental impacts of the disposal of spent fuel and general comments about the adequacy of Table S-3 are outside the scope of the GEIS and Rule. Petitions for a rulemaking to update Table S-3 may be submitted in accordance with the NRC's regulations at 10 CFR 2.802, Petition for Rulemaking. With regard to the comment concerning the health effects of uranium mining, the NRC does not regulate mining of uranium ore. The NRC regulates milling, i.e., the extraction of uranium or thorium from mined ore. The NRC does, however, regulate in-situ leach uranium recovery facilities as milling facilities. See the *Generic Environmental Impact Statement for In-Situ Leach Uranium Milling Facilities* (NUREG–1910, NRC 2009a). No changes have been made to the GEIS or Rule as a result of these comments.

(222-12) (706-5-1) (706-3-16) (706-5-2) (706-5-4) (706-5-5) (706-5-6) (897-7-10) (897-7-11) (898-5-1) (898-5-2) (898-5-22) (898-5-3) (906-1) (993-1)

D.2.49.3 – COMMENT: One commenter criticized the SECY-13-0112, *Consequence Study of a Beyond-Design-Basis Earthquake Affecting the Spent Fuel Pool for a U.S. Mark I Boiling Water Reactor* and COMSECY–13–0030, "Staff Evaluation and Recommendation for Japan Lessons-Learned Tier 3 Issue on Expedited Transfer of Spent Fuel." The commenter stated that SECY-13-0112 was not conducted pursuant to NEPA because it did not include a hard look at alternatives to continued storage of spent fuel in fuel pools, nor did it examine mitigation measures. The commenter also stated that the cost-benefit analysis in COMSECY–13–0030 did not meet the requirements of NEPA.

RESPONSE: The processes used to develop SECY-13-0112 (NRC 2013l) and COMSECY–13–0030 (NRC 2013n) were not developed to meet the NRC's responsibilities under NEPA and are beyond the scope of the GEIS and Rule. No changes were made to the GEIS or Rule as a result of these comments.

(473-8-1) (473-8-2)

D.2.49.4 – COMMENT: Commenters expressed both support for and opposition to recommendations in the January 2012 Blue Ribbon Commission Report on America's Nuclear Future. Some commenters stated they were opposed to the Blue Ribbon Commission on America's Nuclear Future itself and to recommendations in the report, such as centralized interim storage, while other commenters stated that the NRC should follow the roadmap provided by the Blue Ribbon Commission, including support for consent-based siting of a geologic repository. One commenter supported forming an independent Nuclear Waste Administration, and another stated that the United States needed final disposal casks as used by the U.S. Navy and which were noted in the Blue Ribbon Commission report.

RESPONSE: Although mentioned in the GEIS, the January 2012 Blue Ribbon Commission Report on America's Nuclear Future (BRC 2012) is beyond the scope of the GEIS and Rule. The DOE, not the NRC, is responsible for addressing the recommendations from the report. In January 2013, the DOE released *Strategy for the Management and Disposal of Used Nuclear Fuel and High-Level Radioactive Waste* (DOE 2013a), a response to the Blue Ribbon Commission report. In this strategy document, the DOE presents a framework for "moving toward a sustainable program to deploy an integrated system capable of transporting, storing, and disposing of used nuclear fuel and high-level radioactive waste from civilian nuclear power generation…" NRC would be responsible for conducting the license review and issuing a license, if appropriate, for any centralized interim storage facility or geologic repository.

The casks used by the Navy and the DOE to transport and store spent fuel from the Navy program are designed specifically for that spent fuel, which is much more highly enriched than the fuel used in power reactors. To be used in the domestic program, the cask designs would need to be reviewed and approved for use by the NRC. Use of these casks is beyond the

scope of the GEIS and Rule. No changes were made to the GEIS or Rule as a result of these comments.

(45-4-3) (163-16-8) (196-4) (245-6-4) (325-12-4) (447-2-21) (611-57) (618-10) (662-14) (702-4) (707-6)

D.2.49.5 – COMMENT: Several commenters provided suggestions for future legislation that would: (1) hold nuclear power plant owners accountable for all costs associated with radioactive wastes left onsite after plant closure; (2) establish a robust regulatory regime, which must include elimination of the pre-emption of State and Federal regulation of radionuclides; (3) provide supplemental appropriations for the NRC to achieve a full restart of the Yucca Mountain proceeding; (4) amend the NWPA to transfer the DOE responsibilities to a new Federal-private corporation, transfer all Nuclear Waste Fund fees and prior collections to the new Federal-private corporation, and specify that Nuclear Waste Fund monies be directly collected by the corporation and not be subject to Congressional appropriations. One commenter suggested that the Commission should order DOE as a party to the Yucca Mountain licensing proceeding to request supplemental appropriations from Congress and to provide the NRC, under oath and affirmation, with a plan to restart all DOE activities related to Yucca Mountain. Commenters suggested that the NRC should propose that the NWPA be amended or replaced to require a specific, achievable plan for permanent disposition of spent fuel before any new licenses are granted. Another commenter suggested that the law be changed to address the isolation of HLW from the biosphere for more than 10,000 years as required by current law. One commenter indicated that the NRC should inform Congress of the untenable hazards of the nuclear industry and advise Congress to authorize prompt cancellation of all current nuclear power plant licenses and to accelerate the political and regulatory processes for repository siting.

RESPONSE: Suggested legislative changes are beyond the scope of the GEIS and Rule. Commenters interested in proposing legislation should contact their Congressional representatives. The licensing process for any specific repository, including the proposed facility at Yucca Mountain, is also outside the scope of this proceeding. No changes were made to the GEIS or Rule as a result of these comments.

(377-1-10) (447-2-16) (532-17) (620-15) (646-10) (662-7) (859-4)

D.2.49.6 – COMMENT: One commenter requested information about NRC documents or procedures that address spent fuel storage during the term of a power reactor's operating license.

RESPONSE: This rulemaking analyzes the environmental impacts of spent fuel storage after the licensed life of a nuclear reactor. Spent fuel storage at operating reactors is outside the scope of the GEIS and Rule, and is addressed in other safety and environmental licensing reviews. The NRC's website at http://www.nrc.gov/waste/spent-fuel-storage.html provides

additional information regarding spent fuel storage. No changes were made to the GEIS or Rule as a result of this comment.

(937-3)

D.2.49.7 – COMMENT: One commenter requested that the NRC explain how it would separately address the impacts of reprocessing, advanced reactors, and non-power reactors.

RESPONSE: The analysis in the GEIS included reactor designs and spent fuel handling activities currently in commercial use or under development in the United States; accordingly this excluded high-temperature gas-cooled reactors, liquid metal fast reactors, and reprocessing. The NRC would conduct separate safety and environmental reviews for future reactor design and reprocessing facility applications. The GEIS and Rule apply only to power reactors and ISFSIs. Non-power reactors (i.e., research and test reactors) are not covered by this rulemaking and thus are subject to individual licensing reviews. No changes were made to the GEIS or Rule as a result of this comment.

(327-22-5) (827-7-4)

D.2.49.8 – COMMENT: Many commenters expressed concerns about who would carry the liability for accidents or catastrophic events similar to events that occurred at Chernobyl and Fukushima. Comments included concerns regarding compensation for health, property, and community services for private citizens living near a nuclear waste facility or along transportation routes used to transport nuclear waste in the event of a waste spill, leak, or accident. Several comments mentioned how the outcome of the Downwinders settlement for compensation to workers and citizens affected by nuclear testing was not sufficient. One commenter noted that the U.S. Government provided compensation to the government of the Marshall Islands following Pacific nuclear tests, but that the compensation covered only a fraction of the total damages for the victims. The commenter went on to assert that the U.S. healthcare system would fail to cover losses from radiological or nuclear events and therefore there does not appear to be assurance that victims of a nuclear accident would be compensated.

Several comments asked why the public should have to bear the burden of loss of property if their land becomes contaminated as the result of an accident. One commenter expressed concern about what options would be available to displaced citizens that would still respect their culture and traditions. Another commenter expressed concern that without a clear liability rule, lawsuits may be brought by large numbers of citizens or groups against a waste storage company, which could negatively affect the NRC. Several comments questioned the effects of the Price-Anderson Act of 1957 and the NWPA, which appear to place the burden of liability on the public and not on the nuclear industry or the NRC, and one commenter felt that the NRC

has provided opportunity for limited liability corporations to run nuclear power plants, which would not have to carry major liability responsibilities.

Several commenters recommended that the facility owners and the industry should carry insurance that should not be subsidized by the U.S. government. Commenters felt that there should be no limits on liability in the event of an accident, and there should be no government bailouts of private entities that produce and store nuclear waste. One commenter suggested that if the private sector is unwilling to take on the liability without subsidies, then the government should assume full control of radioactive waste. Another commenter expressed concerns regarding how the government would carry out its responsibility to pay for the cleanup of a nuclear accident in the event of a national fiscal crisis.

RESPONSE: The NRC disagrees with the comments. Liability resulting from a nuclear accident is outside the scope of the GEIS and Rule. The NRC offers the following information in response to the comments.

The Price-Anderson Nuclear Industries Indemnity Act (Price-Anderson Act, 42 USC 2210), which became law in 1957, was designed to ensure that adequate funds would be available to satisfy liability claims of members of the public for personal injury and property damage in the event of a nuclear accident. The legislation helped encourage private investment in commercial nuclear power by placing a cap, or ceiling, on the total amount of liability each holder of a nuclear power plant license would face in the event of a catastrophic accident. Over the years, the “limit of liability” for a catastrophic nuclear accident has increased the insurance pool to more than $12 billion. Under existing policy, utilities that operate nuclear power plants pay a premium each year for as much as $375 million in private insurance for offsite liability coverage for each reactor site. Each reactor unit is required to participate in the secondary, retrospective premium pool with a total liability of $121.255 million per reactor unit, in case of an accident. Because virtually all property and liability insurance policies issued in the United States exclude nuclear accidents, claims resulting from nuclear accidents are covered under the Price-Anderson Act and third party liability coverage required under the Price-Anderson Act is not limited to the operating period for a reactor. It includes any accident (including those that come about because of theft or sabotage) in the course of transporting nuclear fuel to a reactor site; in the storage of nuclear fuel or waste at a site; in the operation of a reactor, including the discharge of radioactive effluent; and in the transportation of irradiated nuclear fuel and nuclear waste from the reactor. The Energy Policy Act of 2005 extended the Price-Anderson Act to December 31, 2025.

Comments concerning the cost of continued storage of spent fuel are addressed in Section 2.42 of this appendix. No changes were made to the GEIS or Rule as a result of these comments.

(30-24-2) (42-1) (113-8) (192-6) (245-30-2) (245-6-7) (326-64-5) (341-1-9) (410-3) (410-31) (612-4) (634-12) (634-4) (634-8) (662-11)

D.2.49.9 – COMMENT: One commenter suggested that an education program be developed and used to educate the public about the health impacts and steps to take in case of a spent fuel pool fire. The commenter also suggested that potassium iodide tablets be made available through local convenience stores or other resources under the direction of the NRC and the Federal government.

RESPONSE: Chapter 4 and Appendix F of the GEIS address the environmental impacts of spent fuel pool fires. Measures to improve emergency preparedness and education concerning spent fuel pool fires are outside the scope of the GEIS and Rule. No changes were made to the GEIS or Rule as a result of these comments.

(826-25) (826-26)

D.2.49.10 – COMMENT: Several commenters expressed concerns regarding the costs associated with decommissioning and the storage of nuclear waste. One commenter stated that nuclear plant operators are suing the government over the lack of a storage solution. Another commenter presented a calculation that estimates NRC's portion of the costs resulting from delays in implementing the NWPA. One commenter noted that license holders need to submit evidence of financial stability to ensure adequate funds are available for decommissioning. One commenter stated objections to the appearance that industry is gaining financial help through three separate regulatory processes—the Waste Confidence rulemaking, Senate Bill 1240, and foreign ownership of reactors.

RESPONSE: The costs of plant decommissioning are outside the scope of the GEIS and Rule. Although not within the scope of this GEIS, the GEIS has been revised to include the costs of spent fuel storage during the continued storage period due to the extent of public comments received on the topic. Additional comments concerning the costs of nuclear power in general are addressed in Section D.2.42 of this appendix. This rulemaking is separate from and unrelated to the Nuclear Waste Administration Act of 2013 (Senate Bill 1240) and the NRC's ongoing adjudication regarding foreign ownership of nuclear reactors. No changes were made to the GEIS or Rule as a result of these comments.

(112-30-3) (246-24-2) (246-24-3) (246-24-5) (355-2)

D.2.49.11 – COMMENT: Commenters expressed both criticism and support of the NRC. Commenters expressed the view that the NRC is not living up to its mission of protecting people and the environment, does not make safety a priority, lacks a sound safety culture, simply rubberstamps the licensing and operation of nuclear plants and ISFSIs, and provides inadequate oversight for ISFSIs and reactor license renewals. Commenters requested more NRC oversight; stricter NRC regulations; safety assurances; better design criteria for nuclear power plants, including a request for increased resistance to aircraft impacts for new reactor designs and a requirement for additional sources of backup power; more frequent and thorough

inspections at existing nuclear plants; site-specific assessment of existing spent fuel storage systems; and tighter regulations regarding pool storage. Some commenters criticized the NRC's oversight, asserting that the NRC has failed to regulate, has failed to implement tougher regulations on the nuclear industry, and has a poor safety record. Commenters said that the NRC should force industry to come up with a solution for nuclear waste and reduce the nuclear industry's toxic footprint. Some commenters requested that the NRC not allow reactors to operate beyond their original license period. One commenter stated that the NRC does a poor job tracking nuclear materials. One commenter stated that the U.S. Department of Justice needs to examine illegal nuclear waste handling and that the United States should ban the burning of nuclear waste. Another commenter said that more emphasis should be placed on the radioactivity of the waste rather than the source of the waste. One commenter suggested burying spent fuel in NRC workers' backyards. Another commenter criticized former NRC employees that go to work for the nuclear industry. Some commenters expressed support for continued NRC oversight. One commenter said more risk-informed, performance-based rulemaking was needed. Another commenter stated confidence in the NRC, but that the NRC needs to make hard decisions.

RESPONSE: The NRC disagrees with the comments in general. The GEIS and Rule address only the environmental impacts of continued storage. Accordingly, any concerns related to the design, operation, or inspection of a power reactor are beyond the scope of the GEIS and Rule. The term of a reactor operating license, tracking of nuclear materials, the burning of nuclear waste, the location of a disposal site, and the employment decisions of former NRC employees are also beyond the scope of the GEIS and Rule. The NRC recognizes the comments in support of the NRC and its activities. No changes were made to the GEIS or Rule as a result of these comments.

(57-4) (74-1) (75-6) (112-32-1) (112-8-1) (112-23-2) (112-11-3) (112-31-4) (112-8-5) (112-30-6) (112-30-7) (112-30-8) (112-5-9) (120-7) (136-2) (158-1) (163-22-1) (163-31-1) (163-50-1) (163-22-2) (163-24-3) (163-2-7) (193-2) (219-14) (244-5-6) (245-41-1) (246-2-2) (246-9-4) (246-11-5) (250-68-2) (250-19-4) (250-31-4) (253-6) (277-11) (279-3) (282-2) (294-1) (304-2) (305-3) (312-4) (325-33-4) (325-13-6) (325-31-7) (326-59-4) (327-23-1) (327-23-2) (327-24-3) (327-36-3) (327-29-5) (327-2-6) (329-1-1) (329-7-1) (329-19-2) (329-6-6) (330-2) (330-4) (361-5) (376-2) (381-1) (381-10) (417-5) (419-3) (442-2) (455-1) (461-3) (496-1) (512-6) (514-4) (514-7) (515-7) (527-2) (527-4) (532-4) (556-1-28) (556-1-35) (559-2) (566-9) (598-6) (603-13) (603-23) (620-13) (620-8) (649-1) (651-2) (661-1) (692-12) (696-2) (703-4) (703-8) (705-1) (711-27) (716-18) (716-20) (722-3) (723-6) (731-2) (750-2) (752-2) (776-1) (796-1) (798-1) (823-11) (823-21) (823-3) (823-4) (823-48) (823-61) (826-2) (836-5) (848-1) (862-4) (862-8) (895-2) (902-10) (903-7) (904-3) (919-4-2) (919-4-5) (921-3) (932-2) (933-4) (937-17) (937-4) (991-1) (992-2) (997-1) (1004-5) (1005-1)

D.2.49.12 – COMMENT: Commenters suggested various research, studies, and actions the NRC should undertake, including a root cause analysis followed by corrective actions; collecting and sharing raw data regarding radiation leaks; a review of safety considerations for every licensing action; a complete, thorough, and rigorous scientific analysis of the spent fuel issue, dealing with problems transparently; peer-reviewed toxicology reports on radioactive waste; and research into adverse effects of radioactive waste, including impacts on American Indian tribes.

RESPONSE: The NRC disagrees with the comments. For this rulemaking, the NRC has concluded that sufficient information exists to perform a generic environmental analysis of the continued storage of spent fuel after a reactor's licensed life for operation. Further, NEPA instructs the NRC to consider information available at the time of its environmental analysis, which the NRC has done here. No changes were made to the GEIS or Rule as a result of these comments.

(355-9) (823-20) (823-70) (823-71) (823-73) (823-80) (823-81)

D.2.49.13 – COMMENT: One commenter expressed confusion that the NRC is affected by Federal fiscal cutbacks and sequestration when 90 percent of the NRC's budget comes from fees paid by the nuclear industry.

RESPONSE: The NRC disagrees with comment. Although licensees pay fees to the U.S. Treasury to reimburse the government for the cost of NRC's licensing reviews and other activities, the NRC's budget is approved and provided by Congress and therefore is subject to budgetary cuts including sequestration. No changes were made to the GEIS or Rule as a result of this comment.

(30-23-2)

D.2.49.14 – COMMENT: Many commenters provided opinions on what the United States should do with spent fuel. Commenters were both strongly for and against reprocessing of spent fuel. Commenters suggested a number of methods for neutralizing nuclear waste or alternatives to storage such as using integral fast reactors, putting the U.S. military in charge, using thorium molten salt reactors, using the spent fuel as a heat source, electrino fusion power reactors, collective ion accelerators, dematerialization using highest powered positive ions ever, and photo-deactivation using gamma rays. Another commenter asked why the industry has not pursued glassification and burial of at least LLW.

RESPONSE: The comments suggesting reprocessing, glassification, neutralization of nuclear waste, and other alternatives are all beyond the scope of the GEIS and Rule. The GEIS and Rule consider only the continued storage of spent fuel in accordance with present NRC requirements and assess the environmental impacts accordingly. The current U.S. national

policy is disposal of spent fuel in a geologic repository and does not include reprocessing or glassfication. No changes were made to the GEIS or Rule as a result of these comments.

(13-1) (16-1) (17-1) (17-2) (30-9-3) (63-13) (68-1) (68-2) (70-1) (97-2) (100-10) (100-11) (100-12) (100-13) (100-14) (100-15) (100-16) (100-17) (100-19) (100-20) (100-3) (100-30) (100-31) (100-5) (100-6) (100-7) (100-8) (100-9) (101-1) (108-1) (162-1) (191-1) (197-1) (205-14) (208-8) (222-20) (225-1) (239-3) (242-1) (244-4-1) (244-4-3) (245-12-6) (246-18-5) (248-1) (250-31-1) (250-18-3) (250-14-8) (260-1) (260-2) (266-2) (280-13) (306-1) (317-1) (321-2) (321-3) (325-15-1) (325-30-1) (325-15-3) (325-33-5) (326-30-1) (326-42-1) (326-11-2) (326-52-2) (326-24-3) (326-36-3) (327-41-1) (329-9-1) (329-11-4) (329-6-5) (347-12) (377-6-6) (381-9) (390-2) (418-1) (422-3) (439-2) (439-3) (440-2) (441-2) (444-1) (458-1) (480-3) (497-1) (515-10) (515-9) (545-2) (545-5) (550-1) (550-2) (562-13) (564-3) (566-10) (611-29) (611-51) (644-3) (646-12) (646-13) (674-3) (693-4-9) (701-14) (701-5) (711-22) (755-2) (833-1) (851-4) (881-4) (881-6) (917-2) (917-3) (922-1) (927-10) (927-2) (927-5) (966-1) (969-1) (976-1) (979-1) (981-1) (983-1) (994-1) (1002-1)

D.2.49.15 – COMMENT: Two commenters discussed the development of SMRs. One commenter supported the use of SMRs as a safer source of carbon-free energy, with lower project risks. Another commenter stated that the rulemaking will be used to support the development and use of SMRs.

RESPONSE: The NRC acknowledges the comments concerning SMRs. No changes were made to the GEIS or Rule as a result of these comments.

(182-2) (245-19-10) (250-65-2)

D.2.49.16 – COMMENT: One commenter described the amount of HLW and spent fuel being managed by the DOE and expressed support for timely spent fuel storage solutions for DOE sites.

RESPONSE: The NRC acknowledges the comment concerning spent fuel at DOE sites. This rulemaking addresses spent fuel generated by commercial nuclear reactors; spent fuel in possession of the DOE is outside the scope of the GEIS and Rule. No changes were made to the GEIS or Rule as a result of this comment.

(646-24)

D.2.49.17 – COMMENT: One commenter criticized the NRC's independence for licensing the PFS dry storage facility and subsequently waiving the licensing fees.

RESPONSE: Fees associated with the licensing of the PFS dry storage facility are outside the scope of the GEIS and Rule. No changes were made to the GEIS or Rule as a result of this comment.

(579-2)

D.2.49.18 – COMMENT: Commenters provided their views on sources of energy and energy policy in the United States. Many commenters expressed support for energy efficiency and conservation, as well as renewable energy sources. A few commenters said that the NRC should focus on developing or promoting alternative energy sources, such as solar energy. Some commenters supported renewables, but stated nuclear energy should be a part of the United States' energy mix.

RESPONSE: These comments are beyond the scope of the GEIS and Rule. The NRC is an independent agency that was established to regulate the nation's civilian commercial, industrial, academic, and medical uses of nuclear materials. The NRC does not license or regulate sources of energy other than nuclear power. Further, the NRC does not shape national energy policy or promote any source of energy. National energy policy is established by Congress and the President and is outside the scope of the NRC's statutory responsibilities. No changes were made to the GEIS or Rule as a result of these comments.

(200-4) (235-1) (244-9-5) (245-2-1) (250-66-6) (275-1) (325-25-2) (325-7-2) (326-59-1) (326-26-2) (326-30-3) (326-24-4) (326-58-5) (326-61-5) (327-16-1) (327-45-1) (327-25-2) (327-34-2) (328-16-10) (329-14-5) (489-2) (530-2) (543-7) (570-4) (581-2) (608-8) (646-15) (688-21) (744-4) (796-3) (870-2) (901-4) (901-6)

D.2.49.19 – COMMENT: Many commenters stated their belief that the nuclear industry has improper influence over the NRC and politicians, or that the NRC puts the welfare of the nuclear industry ahead of the public. Several commenters alleged that the NRC is captured by the industry and said it is biased toward allowing industry to create even more spent fuel. Many commenters requested that the NRC make public safety and protection of the environment its number one priority, asking that the NRC listen to the public rather than industry, and one commenter requested real-time radiation monitoring. One commenter requested that the NRC engage non-industry people in the conversation regarding the fate of spent fuel. One commenter stated that both the NRC and the DOE have too cozy of a relationship with the nuclear industry. Two commenters said that the NRC should avoid any influence from the NEI. Commenters questioned whether the NRC was truly an independent agency and cited the agency's track record of issuing nuclear reactor license renewals. Some commenters referenced former Chairman Gregory Jazcko's positions regarding the safety of nuclear power.

One commenter specifically referenced a 2003 study co-authored by Chairman Allison Macfarlane (Alvarez et al., 2003), and questioned the Chairman's support of the draft GEIS.

Some commenters refuted the notion that the NRC is a captured agency, stating that the regulatory process is adversarial and that the nuclear industry sometimes exceeds NRC regulations. One commenter stated that the NRC was over-protective of public safety.

RESPONSE: The NRC disagrees with the comments. The NRC is an independent Federal agency established in 1975 to ensure the safe use of radioactive materials for beneficial civilian purposes while protecting people and the environment. The NRC strives to conduct its regulatory responsibilities in an open and transparent manner, consistent with the NRC Approach to Open Government. To ensure objectivity and independence in its regulatory activities, the NRC and the Office of Government Ethics have stringent rules and procedures to ensure that employees of and advisors to the NRC are free of conflicts of interest and the appearance of conflicts of interest. Concerning individual Commissioner's support for issuance of the draft GEIS, each Commissioner's voting record, which includes any issue with which they may have disagreed, can be found in ADAMS by searching for ADAMS Accession No. ML13217A245 (NRC 2013u). No changes were made to the GEIS or Rule as a result of these comments.

(14-3) (21-1) (30-5-4) (111-1) (112-24-3) (112-34-3) (126-3) (136-12) (163-22-10) (163-39-2) (163-24-4) (163-41-4) (175-4) (177-6) (234-1) (242-2) (244-11-9) (245-35-1) (245-48-2) (245-6-2) (245-25-4) (245-43-5) (246-3-3) (250-53-1) (250-38-2) (250-55-2) (250-28-3) (250-28-5) (250-31-5) (250-11-6) (287-8) (326-8-8) (327-37-1) (327-4-1) (327-6-3) (329-31-3) (329-32-4) (347-5) (380-3) (409-2) (410-2) (447-2-19) (454-13) (483-3) (510-3) (512-2) (552-2-29) (553-4) (610-3) (651-1) (705-6) (714-1-18) (714-1-20) (716-22) (750-3) (805-4) (831-3) (902-2) (902-7) (903-4) (904-1) (904-4) (919-5-8) (919-3-9) (921-5) (938-2) (998-5) (1004-1) (1004-3) (1008-1) (1009-1)

D.2.49.20 – COMMENT: Commenters expressed criticism of and a lack of confidence in the nuclear industry, stating that the industry is too focused on profit rather than on protecting the public. One commenter stated opposition to the nuclear industry and the outcome of the Citizens United Supreme Court case. Another commenter stated that workers are paid by industry to speak positively of nuclear power. One commenter expressed opposition to the NEI stating that its only function was public relations for nuclear power. Another commenter stated that the nuclear industry had too much influence over input to the *Federal Register* and another alleged decades of accidents, leaks, and cover-ups by the nuclear industry. One commenter stated that the government needs to make CEOs take ownership of the toxic waste their companies create, and expressed frustration that CEOs live far from the health hazards their industries create.

RESPONSE: Comments concerning opposition to or criticism of the nuclear industry are outside the scope of the GEIS and Rule. No changes were made to the GEIS or Rule as a result of these comments.

(11-3) (202-2) (250-42-1) (250-48-3) (326-51-1) (328-16-1) (328-17-1) (328-14-6) (333-2) (478-4) (523-2) (612-2) (616-9) (640-8) (703-5) (709-9) (744-14) (744-7) (755-5) (790-2) (973-2)

D.2.49.21 – COMMENT: Commenters expressed concern that there has been too little media coverage, transparency, or political action related to nuclear energy and waste issues. Commenters felt that there was not enough information in the media about the risks and dangers of radioactive waste leaks and accidents. One commenter expressed concerns that the media and the NRC were purposely not reporting contamination events at nuclear energy plants or the risk of Fukushima contamination on air quality and seafood consumption. Another commenter felt that the media output was being controlled by companies with interests in the nuclear industry and that the reality of surviving a highly contaminated environment has not been communicated. Other commenters described a lack of transparency regarding politics and the funding of industries that support nuclear power. Several comments expressed dissatisfaction with their state elected officials not following through on their statements to ensure safety and provide an accounting of leaks and other issues at a local nuclear power plant. On a national level, one commenter felt that Congressional officials did not vote in the interest of the public for loan guarantees and subsidies, and that the election of the chair of Exelon to the Blue Ribbon Commission was self-serving and not in the best interests of the public. Another commenter expressed frustration that the public is not in control in the government and that corporations and special interest groups prevent the government from addressing the root issue of nuclear waste. One commenter suggested that elected officials need to start being more concerned about the money they accept from nuclear industry companies.

RESPONSE: This comment is beyond the scope of the GEIS and Rule. The actions of the media or elected officials are independent of the NRC. Information about licensee events that are reported to the NRC can be found on the NRC website at http://www.nrc.gov/reading-rm/doc-collections/event-status/. No changes were made to the GEIS or Rule as a result of these comments.

(30-22-2) (30-15-4) (102-1) (102-2) (102-3) (163-37-1) (163-37-3) (250-22-4) (327-37-2) (329-19-3) (498-16) (980-1) (989-1)

D.2.49.22 – COMMENT: Commenters expressed general concern about nuclear power, spent fuel, nuclear accidents, natural gas fracking, pesticides, the health impacts of radiation, industrial pollution, other energy sources besides nuclear power, the security of U.S. nuclear facilities, fallout from nuclear weapons testing, genetically modified organisms, and the impacts of industrial effluents on waterways in the Midwest.

RESPONSE: The NRC acknowledges the comments concerning environmental impacts from various energy sources, industrial pollution, genetically modified organisms, and nuclear weapons. The comments are general in nature, unrelated to the continued storage of spent

fuel, and are outside the scope of the GEIS and Rule. No changes were made to the GEIS or Rule as a result of these comments.

(105-1) (112-29-4) (244-6-6) (250-52-1) (250-35-6) (250-63-6) (325-10-1) (325-33-1) (325-33-3) (327-33-2) (327-32-3) (328-1-2) (346-1) (410-17) (552-1-16) (610-7) (634-10) (634-3) (806-1) (826-5)

D.2.49.23 – COMMENT: One commenter provided multiple comments stating that several international organizations are not providing the necessary oversight and monitoring of the acquisition, use, and health consequences of nuclear materials.

RESPONSE: International activities (by the IAEA or other global organizations) related to the use of nuclear materials are outside the scope of the GEIS and Rule. The GEIS and Rule address the environmental impacts of storage of domestic commercial spent fuel after the licensed life of a reactor and prior to disposal. No changes were made to the GEIS or Rule as a result of these comments.

(113-10) (113-11) (113-2) (113-4) (113-5) (113-6) (113-7)

D.2.49.24 – COMMENT: Commenters expressed concerns about military use of nuclear material. Commenters stated that depleted uranium used by the U.S. military is a health hazard to those that handle it and is detrimental to the environments where it is used. Another commenter stated that nuclear waste needs to be better secured or it will end up in the black market weapons trade. Two commenters suggested that depleted uranium production should be halted and all nuclear weapons should be eliminated from defense uses.

RESPONSE: Comments concerning military uses of nuclear material, including depleted uranium and nuclear weapons, are outside the authority of the NRC and beyond the scope of the GEIS and Rule. No changes were made to the GEIS or Rule as a result of these comments.

(45-12-4) (84-1) (327-34-1) (527-3) (662-13)

D.2.49.25 – COMMENT: Several commenters expressed support for, agreement with, or adoption of the comments submitted by another commenter or organization. Some commenters referred to comments submitted by an industry organization, while one commenter referred to comments submitted by a variety of organizations, including a Tribal government, a municipal government, and advocacy organizations.

RESPONSE: The NRC recognizes the comments endorsing other comments. The NRC's responses to the specific comments referred to are addressed elsewhere in this appendix. No changes were made to the GEIS or Rule as a result of these comments.

(373-13) (606-1) (638-3) (672-1) (688-22) (697-1-27) (745-1) (820-5) (914-1) (942-1)

D.2.50 Out-of-Scope Comments – HOSS and Expedited Transfer

D.2.50.1 – COMMENT: Commenters expressed concern about the vulnerabilities of spent fuel pools and the density of storage in the pools and stated the NRC should require that spent fuel cool enough to be in dry storage be moved as soon as possible from pools to dry storage. Many commenters favored moving the fuel into HOSS. Commenters described specific aspects of dry cask and spent fuel pool storage, stating that dry cask storage is inherently safer than pool storage because it does not depend on an electricity supply. One commenter noted that cracks have been found in some pools. Commenters cited the risk of a variety of accidents or other events and referred to the effects of the tsunami on the spent fuel pools and dry casks at the Fukushima Dai-ichi nuclear power plant in Japan. Commenters also stated that the GEIS should have included a consideration of expediting the transfer of spent fuel to dry storage and that the NRC's basis for excluding this from consideration in the GEIS is insufficient. A commenter asserted that the NRC is making a mistake in assuming that an unlikely event will never happen and that this assumption is irresponsible and counter to the NRC's mission of protecting public safety. Other commenters added that the nuclear power industry should bear the costs of transfer and that hardened dry storage should be employed even if it is more expensive for utilities. In providing their views on pool storage, commenters referred to specific plants, including Calvert Cliffs (Maryland), Peach Bottom (Pennsylvania), San Onofre and Diablo Canyon (California), and Browns Ferry (Alabama) and described their concerns with pools at those sites (e.g., the risk posed by sudden dam failure, lack of hardened structures housing the pools, proximity to facilities such as a natural gas terminal, potential for being used as weapons of mass destruction, climate change concerns, and the potential for pool fires resulting from a loss of water).

Several commenters stated that expedited transfer should be implemented at California plants before California's next big earthquake occurs. One commenter stated that the California Energy Commission has directed the two plants in California to accelerate the transfer of spent fuel to dry storage and asked if the NRC would "stand in California's way."

RESPONSE: The NRC expresses no view on these comments. As explained in Section 1.6.2.2 of the GEIS, the GEIS does not propose or impose safety requirements for the storage of spent fuel (e.g., expediting the transfer of spent fuel from pools to casks or into hardened dry storage). The GEIS assesses the reasonably foreseeable environmental impacts of the continued storage of spent fuel in accordance with current NRC requirements. The impacts of expedited transfer and the use of hardened dry storage are not within the scope of the GEIS because the NRC does not currently require these actions.

The NRC acknowledges the concerns about spent fuel storage in pools and agrees that this topic requires careful consideration. The Commission evaluated a staff assessment of this issue in a separate process and issued its decision on May 23, 2014 (NRC 2014a), not to pursue further evaluation of the expedited transfer of spent fuel from pools to dry storage. The

Commission also directed the staff to evaluate or provide more information on other aspects of spent fuel pool regulation and operation. Regarding expedited transfer, the Commission stated, "The Commission has approved the staff's recommendation that…no further generic assessments be pursued related to possible regulatory actions to require the expedited transfer of spent fuel to dry cask storage." The NRC staff's conclusion, which was provided to the Commission in COMSECY–13–0030 (NRC 2013n), is that the "expedited transfer of spent fuel to dry cask storage would provide only a minor or limited safety benefit…and that its expected implementation costs would not be warranted." In the COMSECY, the NRC staff did not assume, as noted in one comment, that an unlikely event will never happen, but instead systematically assessed the probability of unlikely events and weighed that information against the costs and benefits of implementing measures such as expedited transfer. The COMSECY responded to Commission direction (NRC 2011l) to evaluate whether the issue of expedited transfer should be included with the NRC's Japan lessons-learned activities and whether any regulatory action is recommended or necessary. The NRC staff's assessment relies on another NRC technical study (NRC 2013l).

The issue of whether states or utilities (e.g., the California Energy Commission) may direct plants to implement the expedited transfer of spent fuel to dry storage is beyond the scope of the GEIS and Rule.

Comments raised several topics in conjunction expedited transfer, and these topics are addressed in other responses or in updated GEIS text. Section D.2.50.5 of this appendix responds to comments concerning HOSS. Sections D.2.38.4, D.2.38.5, D.2.38.6, D.2.38.8 D.2.38.10 and of this appendix contain further discussion about the safety of dry cask and pool storage. Section D.2.40.1 of this appendix addresses concerns about leaks and the integrity of pools. Section D.2.42 of this appendix provides information about costs related to continued storage. In addition, Chapter 2 of the GEIS has been revised to include some information about the costs of storage. Finally, discussions of the applicability of this generic analysis and the process for addressing site-specific concerns are provided in Sections D.2.11.1 and D.2.11.7 of this appendix, respectively. No changes were made to the GEIS or Rule as a result of these comments.

(23-10) (30-15-8) (35-4) (39-5) (48-2) (59-6) (64-2) (64-9) (71-1) (71-3) (86-2) (112-10-2) (112-8-2) (112-15-4) (112-5-4) (112-5-6) (112-7-6) (112-3-7) (145-2) (151-1) (163-2-2) (198-2) (207-1) (230-9) (232-4) (233-5) (233-6) (236-2) (244-14-11) (246-11-1) (246-22-6) (250-29-2) (250-64-3) (250-66-4) (250-69-5) (251-2) (252-3) (256-6) (288-2) (290-5) (303-4) (309-3) (318-2) (322-5) (325-26-4) (325-3-5) (326-52-1) (326-64-1) (326-7-1) (326-59-2) (326-10-3) (326-19-3) (326-52-3) (326-58-3) (326-7-3) (326-43-4) (326-14-5) (326-53-6) (327-39-6) (328-9-7) (329-18-5) (336-16) (336-5) (341-1-4) (351-3) (362-4) (364-1) (377-3-5) (377-1-7) (381-7) (389-1) (402-5) (404-3) (405-6) (407-3) (421-7) (423-1) (433-4) (443-10) (453-4) (454-2) (467-2) (472-1) (473-12-13) (477-1) (491-7) (495-3) (495-5) (499-1) (511-1) (515-6) (527-1) (529-4) (545-3)

(548-3) (548-8) (552-1-23) (563-1) (566-7) (571-4) (573-2) (590-1) (595-1) (648-11) (662-2) (666-1) (678-1) (715-4) (736-1) (737-1) (778-1) (788-1) (801-4) (811-6) (821-6) (826-21) (864-9) (888-9) (917-1) (938-4) (1007-4)

D.2.50.2 – COMMENT: In expressing support for expediting the transfer of spent fuel from pools to dry cask storage, commenters stated their views that spent fuel should be contained in casks suitable for transportation and should be moved offsite. Commenters offered opinions about how spent fuel should be casked so as to avoid the need for repackaging for transportation. A commenter stated that spent fuel should be transferred to casks small enough to be transportable (and described that as being less than 125 tons). Some commenters favored the immediate removal of spent fuel to storage or repository locations away from population centers and farmland, citing the risks of terrorism, earthquakes, and other events.

RESPONSE: The NRC disagrees with the comments. As explained in Section D.2.50.1 of this appendix, the GEIS does not authorize, propose, or impose requirements for the storage of spent fuel, (e.g., expediting the transfer of spent fuel from pools to casks, either onsite or offsite, or requiring that all spent fuel be stored in casks approved for both storage and transportation). The GEIS assesses the reasonably foreseeable environmental impacts of the continued storage of spent fuel in accordance with current NRC requirements.

As discussed in Section 2.1.2.2 of the GEIS, spent fuel may be stored in casks that are NRC-licensed for storage only or for both storage and transportation. Both types of casks are acceptable provided they meet NRC requirements. Spent fuel that is stored in casks approved for storage only must ultimately be transferred into packages approved for transportation. The NRC is currently evaluating how to harmonize its requirements for spent fuel dry storage in 10 CFR Part 72 and its requirements for spent fuel transportation in 10 CFR Part 71. More information about this effort can be found in NRC (2012q) and at www.nrc.gov/waste/spent-fuel-storage/public-involvement.html. No changes were made to the GEIS or Rule as a result of these comments.

(45-6-6) (59-13) (447-2-12) (448-3) (583-1) (634-11) (634-2) (673-1)

D.2.50.3 – COMMENT: In expressing support for expediting the transfer of spent fuel from pools to dry cask storage, commenters also stated that the NRC should conduct further analysis of dry storage issues. One commenter stated that the NRC should be looking into developing a “reliable extreme long-term storage modality,” and stated that any method that relies upon an uninterrupted electric supply is bound to fail.

RESPONSE: The NRC agrees that further study of long-term storage issues, including dry cask storage, would help the NRC plan for the continued safe storage of spent fuel. In accordance with Commission direction, the NRC staff is separately examining the regulatory framework and potential technical issues related to the extended storage and subsequent transportation of

spent fuel. This ongoing research is part of the NRC's effort to continuously evaluate and update its safety regulations. The NRC is not aware of any deficiencies in its current regulations that would challenge the continued safe storage of spent fuel in spent fuel pools or dry cask systems. If, at some time in the future, the NRC were to identify a concern with the safe storage of spent fuel, the NRC would evaluate the issue and take whatever action or make whatever change in its regulatory program that is necessary to protect public health and safety. The NRC will continue to monitor the ongoing research into spent fuel storage.

As part of its Station Blackout Mitigation rulemaking, the NRC is considering the need to implement additional requirements to address potential issues relating to the extended loss of offsite power. One of the requirements being considered as part of this rulemaking is the need for additional, diverse backup power supplies for the spent fuel pool. Section 2.1.2.1 of the GEIS has been updated to account for this rulemaking, and additional information on the rulemaking can be found on www.regulations.gov by searching for docket NRC-2011-0299. No changes were made to the Rule as a result of these comments.

(65-1) (257-3) (357-4) (507-3) (570-2)

D.2.50.4 – COMMENT: Commenters described the benefits and costs associated with moving spent fuel from the pools to dry cask storage. One commenter stated that expediting the transfer of spent fuel from pools to dry casks should not be more expensive, because all spent fuel will need to be transferred eventually, and the only unanswered question is when that will occur. The commenter referred to an EPRI technical report (EPRI 2012), stating that the report's estimate of the costs of transferring all spent fuel to dry storage ($3.5 to $3.9 billion) would be significantly less than the potential costs associated with a spent fuel pool fire at Pilgrim Nuclear Power Station ($488 billion).

Another commenter stated that expediting the transfer of spent fuel to dry casks would benefit the economy by creating jobs, and that not doing this creates a risk of hurting a regional economy in the event of an accident or power loss. The commenter provided an estimate of costs to move spent fuel to casks, concluding that the total cost would be about $14.4 billion to move all spent fuel in the United States from now until 2020. The commenter stated that $4.8 billion of that would be cycled back into the economy through trade workers.

RESPONSE: The NRC expresses no view on these comments. As explained in Section 1.6.2.2 of the GEIS, the GEIS does not authorize or propose or impose requirements for the storage of spent fuel (e.g., expediting the transfer of spent fuel from pools to casks). The GEIS considers only the continued storage of spent fuel in accordance with present NRC requirements and assesses the environmental impacts accordingly; the impacts and costs of expedited transfer are not within the scope of the GEIS and Rule because NRC does not presently require this activity.

As discussed in Section D.2.50.1 of this appendix, the Commission has evaluated and made a decision concerning a staff assessment of expediting the transfer of spent fuel from pools to dry storage, and this assessment includes a cost-benefit analysis. The Commission's decision is provided in a Staff Requirements Memorandum of May 23, 2014 (NRC 2014a), and the NRC staff's assessment and cost-benefit analysis are provided in a memorandum to the Commission, COMSECY–13–0030 (NRC 2013n). No changes were made to the GEIS or Rule as a result of these comments.

(529-2) (556-5-6)

D.2.50.5 – COMMENT: Commenters stated that the NRC should require HOSS and that it should be a top national security priority as an interim measure before the final disposition of spent fuel. The commenters referred to or repeated the specific elements of HOSS contained in the statement of "Principles for Safeguarding Nuclear Waste at Reactors". Some commenters provided additional suggestions for hardening onsite storage (e.g., bolting casks to the pad or using concrete ramps in front of casks to deflect aircraft impacts). Commenters stated the NRC should not continue licensing reactors until HOSS is implemented nationwide. Some commenters expressed concern about water supplies and emphasized that HOSS cannot be a permanent measure near water sources (e.g., noting that there are 33 reactors on the Great Lakes basin). Most commenters favored HOSS and were opposed to transporting spent fuel offsite, but some commenters expressed disagreement with HOSS or support for moving spent fuel to hardened facilities at remote locations.

RESPONSE: As stated in Appendix B of the GEIS, current NRC licensing requirements for storage facilities ensure their robust design, and spent fuel has been stored safely in pools and in dry casks for several decades. See Sections D.2.38.4, D.2.28.5, D.2.38.6, D.2.28.8, and D.2.38.10, and of this appendix for further discussion regarding the safety of dry cask and pool storage. Also as explained in Section 1.6.2.2 of the GEIS, the GEIS does not impose new regulatory standards for spent fuel storage (e.g., requirements to harden onsite or offsite storage in pools and dry casks). The GEIS assumes that technology remains the same throughout the timeframes analyzed and considers the impacts of continued storage in accordance with current NRC requirements. Likewise, technical judgment as to how hardened storage would be implemented (e.g., whether to use concrete ramps, bolt casks in place, locate hardened storage near waterbodies, or hardened storage at or away from reactor sites) and the associated costs, benefits, and environmental impacts are not within the scope of the GEIS, because NRC regulations do not require hardened storage.

As a matter separate from this rulemaking, the NRC is considering, in its update of the ISFSI security requirements, a request that the NRC require HOSS at all power plants and away-from-reactor storage sites (see "Petition for Rulemaking Submitted by C–10 Research and Education Foundation, Inc.," 77 FR 63254). The proposed Rule, scheduled to be published for comment in 2017, will formally address the petition. The NRC had offered the draft technical basis for this

proposed Rule for public comment and has published responses to the comments that were submitted (78 FR 77606). Further information on the rulemaking is provided in comment responses dated November 21, 2013 (NRC 2013v). Consistent with its NEPA responsibilities, the NRC would determine based on that or any related rulemaking whether an update to the GEIS is necessary. No changes were made to the GEIS or Rule as a result of these comments.

(2-2) (9-2) (30-2-5) (34-4) (35-2) (45-1-2) (45-6-7) (52-3) (56-1) (75-4) (78-3) (89-8) (112-6-4) (116-4) (127-1) (139-2) (149-2) (174-3) (188-2) (189-6) (198-4) (222-16) (222-18) (230-13) (245-31-3) (246-13-4) (246-11-6) (246-16-9) (250-29-1) (250-12-2) (250-51-2) (250-30-5) (303-16) (309-4) (309-6) (319-12) (319-2) (319-9) (320-1) (326-15-10) (327-20-6) (329-33-3) (329-11-5) (336-6) (357-3) (358-14) (377-1-16) (377-5-16) (440-1) (490-6) (507-2) (531-2-22) (537-6) (545-4) (552-1-24) (552-1-28) (552-2-7) (562-2) (609-4) (611-53) (620-14) (636-3) (646-3) (646-8) (648-4) (660-9) (702-3) (707-4) (728-7) (741-4) (748-2) (757-15) (774-9) (789-4) (815-5) (815-7) (815-8) (821-9) (826-27) (829-2) (860-9) (890-4) (890-8) (901-3) (916-3-10) (916-3-14) (927-1) (927-3) (927-7) (927-9) (946-2)

D.2.50.6 – COMMENT: In expressing support for implementing HOSS, commenters cited the risks of terrorism and accidents in pools and stated that dry storage should be able to withstand a range of natural and human-induced accidents or events (e.g., tornadoes, power outages, climate change effects, and terrorist attacks). Commenters referred to the accidents at Chernobyl and the Fukushima Dai-ichi nuclear power plant. One commenter stated that the GEIS underestimates the risks of pool fires and ignores the HOSS alternative. Another commenter requested that the NRC impose a schedule for moving spent fuel from pools into dry storage at the Browns Ferry Nuclear Power Plant and other power plants with Mark I and Mark II reactors.

RESPONSE: The NRC agrees in part and disagrees in part with the comments. The NRC agrees that spent fuel storage must be robust, and in fact spent fuel has been stored safely in pools and dry casks of robust design for several decades. The NRC requires that fuel storage systems be designed to protect against natural phenomena, such as seismic events, tornadoes, and flooding; dynamic effects (e.g., flying debris or drops from fuel handling equipment and drops of fuel storage and handling equipment); and hazards to the storage site from nearby activities. More information about the safety of dry storage is provided in Sections D.2.38.1, D.2.38.3, D.2.38.4, D.2.38.5, and D.2.38.15 of this appendix. More information about accidents is provided in Section D.2.35 of this appendix. Additional information about actions taken or required by the NRC in the wake of the accident at the Fukushima nuclear facility is provided on the NRC's website (http://www.nrc.gov/reactors/operating/ops-experience/japan-dashboard.html).

Concerning potential terrorist attacks, the NRC takes very seriously the security of all NRC-regulated facilities. Security requirements at NRC-regulated facility are based on an analysis of the threat to these facilities, as described in Section 4.19 of the GEIS. In cases when a new

threat is detected, immediate effective security orders may be issued (and have been in the past) to address emerging threats. Detailed discussions of many aspects related to security and terrorism are provided in Section D.2.36.

As explained in Section 1.6.2.2 of the GEIS, the GEIS does not authorize, propose, or impose any particular approach to storage of spent fuel, including HOSS. Further, this GEIS does not propose or assess the impacts of alternatives (e.g., HOSS) that are not currently required by the NRC.

The NRC disagrees with the comment that it has underestimated the risks of spent fuel pool fires. The NRC staff's analysis of spent fuel pool fires in Appendix F of the GEIS is based on the NRC's extensive evaluations of the risk and impacts of spent fuel pool fires and has considered a range of credible initiating events that could lead to a spent fuel pool fire. The NRC agrees that the consequences of a spent fuel pool fire would be significant, as explained in Appendix F, but disagrees that the NRC has underestimated the risks. More information about the analysis of spent fuel pool fires is provided in Section D.2.39.2 of this appendix.

As discussed further in Section D.2.50.1 of this appendix, the Commission has issued a decision concerning expedited transfer and provided direction to staff concerning other topics related to spent fuel pool management and regulation (NRC 2014a). No schedules for moving spent fuel to dry storage would be developed for any site unless the Commission determines that this activity is warranted. No changes were made to the GEIS or Rule as a result of these comments.

(89-7) (112-31-8) (303-9) (327-27-3) (327-9-3) (329-13-2) (840-6) (883-3) (929-16)

D.2.50.7 – COMMENT: Commenters expressed concern about the storage of high-burnup spent fuel. Commenters stated that before transferring spent fuel from pools to dry casks, cask storage should be reinforced to allow for the safe storage of high-burnup fuel. Another commenter stated that the NRC has allowed the industry to produce high-burnup spent fuel without having a plan for handling it.

RESPONSE: The NRC acknowledges the concerns about storing high-burnup spent fuel. In response to these concerns, and as discussed in more detail in Section D.2.38.19 of this appendix, the NRC has added Appendix I and updated several areas of the GEIS to include a description of high-burnup fuels.

The NRC disagrees with the comment concerning a plan to handle high-burnup spent fuel. Currently, dry cask designs for all fuels must meet transportation requirements in 10 CFR Part 71 or storage requirements in 10 CFR Part 72. The NRC approves designs only after a full safety review, and more information about the NRC's oversight of high-burnup fuel is provided in Section D.2.38.19 of this appendix and the new Appendix I.

To gain a more complete understanding of high-burnup fuels, the NRC has a number of activities underway. The NRC is continuing testing to provide further information on how different types of cladding on spent fuel will behave. In addition, the NRC has begun planning its oversight of a study that will be managed jointly by the nuclear industry and the DOE. In this study, high-burnup spent fuel will be loaded into a cask fitted with instruments to provide temperature readings and allow gas sampling. Those readings, combined with other tests and inspection information, will provide a better understanding of what happens to high-burnup spent fuel in a storage cask as it cools over time. The NRC is also monitoring international efforts in this area. All these activities will help cask designers, users, and regulators better understand how to ensure that high-burnup spent fuel will remain safe in storage. No changes were made to the Rule as a result of these comments.

(39-6) (57-3) (329-17-3)

D.2.50.8 – COMMENT: A commenter stated that it is unclear whether the NRC's ISFSI security rulemaking will consider requiring dry cask storage at reactor sites. The commenter cited a portion of the *Federal Register* Notice of availability for the draft technical basis for the rulemaking (74 FR 66589), which acknowledges that the NRC is considering a petition to implement requirements for hardening spent fuel storage facilities and that the NRC may consider this petition in the course of developing the proposed Rule.

RESPONSE: As stated in a 2012 *Federal Register* Notice (77 FR 63254), the NRC is considering in its update of the ISFSI security requirements a petition requesting that the NRC require HOSS at all power plants and away-from-reactor storage sites. The proposed Rule, scheduled to be published for comment in 2017, will formally address the petition. The NRC had offered the draft technical basis for this proposed Rule for public comment (78 FR 77606) and has published responses to the comments that were submitted (NRC 2013v). Further information on the rulemaking is provided in those comment responses. No changes were made to the GEIS or Rule as a result of this comment.

(1-21)

D.2.50.9 – COMMENT: Commenters stated that the NRC should require power plant operators to harden the structures housing spent fuel pools, citing the effects of the tsunami in Japan on the spent fuel pools at the Fukushima Dai-ichi nuclear power plant. One commenter stated that spent fuel pools are not hardened, yet they contain greater quantities of radioactive materials than the reactor cores protected by containment buildings. The commenter further stated that the NRC has not studied all of the potential modes of attack on spent fuel pools and related consequences. The commenter also expressed disagreement with NRC statements that "airspaces are or can be protected or defended." Two commenters stated that the NRC will not admit its standards for the pools are insufficient, because then licensees would need either to shut down or spend money on safety-related improvements.

RESPONSE: The NRC agrees in part and disagrees in part with the comments. As explained in Section 1.6.2.2 of the GEIS, the GEIS does not authorize any particular approach to storing spent fuel or impose new regulatory standards (e.g., requirements to harden spent fuel pool housing structures). The GEIS assumes that technology remains the same throughout the timeframes analyzed and considers the impacts of continued storage in accordance with present NRC requirements.

As discussed in Section D.2.50.1 of this appendix, the NRC acknowledges the concerns about spent fuel storage in pools. Concerning whether spent fuel should be moved expeditiously out of the pools and into dry storage facilities, the Commission decided on May 23, 2014, not to pursue further evaluation of the expedited transfer of spent fuel out of pools. The Commission also directed the staff to evaluate or provide more information on other aspects of spent fuel pool regulation and operation (NRC 2014a). The NRC has conducted numerous studies on nuclear power plant and storage facility vulnerabilities since September 11, 2001 and the accident at the Fukushima Dai-ichi nuclear facility in Japan. The NRC's studies systematically and methodically assess those threats, accidents, or vulnerabilities that the NRC staff have determined to be worthy of consideration because of the severity of their consequences or the probability of their occurrence. Thus, all potential modes of attack may not warrant in-depth consideration. Section 4.19 of the GEIS provides a summary and assessment of the information from these studies. Section D.2.36 of this appendix discusses this information in the context of the GEIS impacts analysis. Sections D.2.38.6 and D.2.38.10 of this appendix contain further discussion about the safety of spent fuel storage in pools.

The protection and defense of airspaces is an aspect of national security and does not fall within the NRC's purview. No changes were made to the GEIS or Rule as a result of these comments.

(45-6-5) (59-12) (447-2-11) (447-1-14) (836-57) (930-3-9)

D.2.50.10 – COMMENT: A commenter referred to points made by an NRC manager in a 2012 speech at the U.S. Nuclear Infrastructure Council Meeting concerning spent fuel pools, specifically on the consequences of a pool fire and the potential benefits of reducing the spent fuel density in pools. The commenter stated that the revised GEIS for license renewal should reflect the NRC's new understanding of the risks of spent fuel pools.

RESPONSE: This comment is referring to the GEIS for power reactor license renewal (License Renewal GEIS) and is therefore not relevant to this GEIS. The NRC included a qualitative evaluation of spent fuel pool fire accidents in Appendix E of the updated License Renewal GEIS (NRC 2013m). Based on this evaluation, the License Renewal GEIS concludes that the environmental impacts from accidents involving spent fuel pools are comparable to impacts from the accidents of reactors at full power that the NRC had evaluated for the 1996 License Renewal GEIS. As such, the 2013 License Renewal GEIS also concludes that pool accidents do not warrant a separate evaluation.

As discussed in Section D.2.50.1 of this appendix, the Commission evaluated a staff assessment of the benefits of expediting the transfer of spent fuel from pools to dry storage. The Commission decided on May 23, 2014, not to pursue further evaluation of the expedited transfer of spent fuel from pools. Further, as stated in the License Renewal GEIS, in the event that the NRC identifies new and significant information with respect to the environmental impacts of license renewal, the NRC will discuss that information in its site-specific supplemental EISs to the License Renewal GEIS. No changes were made to the GEIS or Rule as a result of this comment.

(718-2-11)

D.2.50.11 – COMMENT: Commenters stated that the NRC is collaborating with the nuclear power industry and prioritizes money over safety. The commenters demanded that the NRC move spent fuel from pools into dry cask storage as soon as possible, stating that, in the wake of the accident at the Fukushima Dai-ichi power plant in Japan, the NRC still acts in a "business as usual" manner. Commenters specifically mentioned the San Onofre and Diablo Canyon power plants in California as subjects of collaboration between the NRC and the nuclear power industry. One commenter presented a "Petition to Upgrade Health and Safety Measures at Indian Point," with signatures attached, requesting the NRC to, among other things, require the nuclear industry to move spent fuel into dry cask storage.

RESPONSE: The NRC disagrees with the comment. The NRC is an independent Federal agency and strives to conduct its regulatory activities in an open and transparent manner, consistent with the NRC Approach to Open Government. To ensure NRC objectivity and independence, the NRC and the Office of Government Ethics have stringent rules and procedures to ensure that employees of and advisors to the NRC are free of conflicts of interest and the appearance of conflicts of interest.

Sections D.2.52.2, D.2.35.14, and D.2.35.15 of this appendix provides information about the NRC's activities to address concerns arising from the accident at the Fukushima Dai-ichi nuclear facility in Japan. More information about the NRC's activities in this area is provided on the NRC's website: http://www.nrc.gov/reactors/operating/ops-experience/japan-dashboard.html.

The petition presented in one of the comments requests that the NRC implement a number of measures at the Indian Point Nuclear Power Plant. Because the petition raises concerns about the Indian Point Nuclear Power Plant, the NRC is processing the petition within its Office of Nuclear Reactor Regulation. While the petition does not provide comments on the scope of the GEIS, two issues raised in the petition are relevant to spent fuel storage: requiring the expedited transfer of spent fuel out of pools and requiring additional safety measures for spent fuel pools. As explained in Section 1.6.2.2 of the GEIS, the GEIS does not authorize any particular approach to storing spent fuel or impose new regulatory standards (e.g., requiring the

expedited transfer of spent fuel to dry storage or requiring additional safety measures for pools). Sections D.2.38.6 and D.2.38.10 of this appendix provides more information about the safety of spent fuel storage in pools and Sections D.2.38.2 and D.2.38.1 of this appendix address the safety of spent fuel storage generally. No changes were made to the GEIS or Rule as a result of these comments.

(454-12) (567-2) (587-2) (811-2) (918-2)

D.2.50.12 – COMMENT: Several commenters provided comments on SECY-13-0112 (NRC 2013l). Commenters disagreed with the study's conclusion that the accelerated transfer of spent fuel to dry casks is not warranted. Commenters expressed support for lowering the density of spent fuel stored in pools and for the expedited transfer of spent fuel from pools to dry storage. The commenters disagreed with the NRC's use of a cost-benefit analysis in the study, stating that the NRC put costs above safety and questioning the NRC's independence as a regulator. One commenter cited particular aspects of the study (e.g., the focus on dose to the public) as an indicator of accident severity rather than the area of land rendered unusable or uninhabitable.

RESPONSE: Comments on the methodology or specific aspects of the spent fuel pool study are beyond the scope of this GEIS and Rule. Appendix E of SECY-13-0112 (NRC 2013l) responds to public comments on various aspects of the study.

The NRC agrees that spent fuel storage in pools is a subject that requires careful evaluation and oversight, but also recognizes that spent fuel has been safely stored in pools for many decades. The spent fuel pool study, along with a separate regulatory analysis, informed a NRC assessment on this issue that is discussed in a memorandum to the Commission (NRC 2013n). As the comments note, the staff's conclusion (in NRC 2013n) is that the "expedited transfer of spent fuel to dry cask storage would provide only a minor or limited safety benefit…and that its expected implementation costs would not be warranted." As stated in Section D.2.50.1, the Commission decided on May 23, 2014, not to pursue further evaluation of the expedited transfer of spent fuel from pools to dry storage and directed the staff to evaluate or provide more information on other aspects of spent fuel pool regulation and operation (NRC 2014a). No changes were made to the GEIS or Rule as a result of these comments.

(326-15-3) (358-7) (734-6) (851-6)

D.2.51 Out-of-Scope Comments – Reactor Accidents

D.2.51.1 – COMMENT: Several commenters stated general concerns with operating reactor safety. One commenter stated that nuclear reactions are fundamentally uncontrollable, and that any number of material and equipment failures can cause an accident. The commenter described problems with handling hot fuel, physical integrity of reactors, bulging, warping and

distortion of fuel assemblies and control rods, loss of criticality controls, cooling system failures, and fuel fires. The commenter also stated that SMRs use metallic fuels and are therefore fundamentally much more dangerous than the metal oxide fuels in common use today in large commercial reactors. Other commenters cited the accidents at Three Mile Island and Fukushima Dai-ichi as reasons that operating nuclear power plants are not safe. Another commenter noted that NRC ignores the vulnerabilities in General Electric boiling water reactors, such as those used at Fukushima.

RESPONSE: These comments are outside the scope of the GEIS and Rule because they raise concerns about operating nuclear power reactor safety, potential causes of reactor accidents and the NRC's related regulatory oversight. The scope of the GEIS is limited to the environmental impacts of continued storage of spent fuel. The issues raised by the commenters are considered as part of site-specific environmental reviews in individual proceedings for licensing and license renewal of reactors. No changes were made to the GEIS or Rule as a result of these comments.

(26-2) (57-5) (100-23) (112-22-2) (125-4) (163-26-2) (163-26-4) (224-1) (276-2) (341-1-10) (376-1) (410-27) (410-7) (616-4) (709-4) (856-4) (916-3-16) (931-3)

D.2.51.2 – COMMENT: Several commenters disagreed with the NRC's conclusion of SMALL land-use impacts in the Waste Confidence GEIS. The commenters assume that a severe accident would occur at a nuclear fuel storage facility resulting in offsite land contamination every 25 to 50 years. The commenters use the Fukushima Dai-ichi nuclear power plant accident to support their arguments. Commenters asserted that based on this real-world data, there will be a major leak of high-level nuclear waste every 25 to 50 years, which would render 250 square kilometers of land unusable for a million years, and collectively would contaminate 5 million square kilometers, which would be catastrophic, not SMALL.

RESPONSE: The NRC disagrees with the comments. The comments assert that severe accidents involving spent fuel in continued storage would occur at a frequency of once every 25 to 50 years. Spent fuel has been stored safely at hundreds of light water reactors around the world for decades, which represents thousands of years of collective experience without a single accident that resulted in significant land contamination. The NRC's estimate of the probability and consequences of a spent fuel pool fire – the only accident that would release enough radioactive material to cause significant land contamination – is provided in Section 4.18 of the GEIS. In this analysis, the NRC estimates the annual probability of a severe accident would be less than once in every 410,000 years. Appendix F discusses the environmental impact of spent fuel pool fires, which includes economic costs related to offsite land contamination. No changes were made to the GEIS or Rule as a result of these comments.

(112-20-4) (208-5) (348-11) (352-11) (373-11) (718-2-1) (718-2-8)

D.2.51.3 – COMMENT: One commenter stated that nearly four dozen reactors in the U.S. still do not comply with 1980 NRC fire-protection regulations that NRC promulgated after the March 1975 Brown's Ferry Reactor accident in Alabama. The commenter cited David Lochbaum's paper on "Cumulative Effects of Non-Regulation," in support of the comment (Lochbaum 2012).

RESPONSE: This comment is outside the scope of the GEIS because it describes the fire-protection regulations for operating nuclear power reactors and does not address how the comment applies to continued storage of spent fuel. Additional information on NRC's fire-protection regulations for operating nuclear power plants can be found at http://www.nrc.gov/reactors/operating/ops-experience/fire-protection.html. No changes were made to the GEIS or Rule as a result of this comment.

(716-21)

D.2.51.4 – COMMENT: Several commenters stated that the Waste Confidence GEIS should address "defects" in the GE boiling water reactor Mark I containment vessel, and how this could affect spent fuel storage, including potential accidents. One commenter recommended closing down and not reissuing licenses to reactors, including those based on the Mark I design.

RESPONSE: These comments are outside the scope of the GEIS because they describe potential deficiencies and accident risks related to a specific containment design for an operating nuclear power reactor and do not address continued storage of spent fuel. The environmental impacts of reactor accidents are considered in site-specific environmental reviews in individual proceedings for licensing and license renewal of reactors. No changes were made to the GEIS or Rule as a result of these comments.

(245-13-1) (496-6) (514-2)

D.2.51.5 – COMMENT: Several commenters provided comments about the methodology and results for PRAs for operating reactors. Some commenters cited the March 2011 accident at Fukushima Dai-ichi nuclear power plants as the basis for reconsidering approaches to PRAs. To support their view that PRAs are flawed, several commenters compared their estimates of actual core damage frequencies in boiling water reactors with Mark I containments (1 in 352 reactor years was a common estimate) to PRA values of core damage frequency.

RESPONSE: These comments are outside the scope of the GEIS because they raise concerns about operating nuclear power reactor PRAs and do not address continued storage of spent fuel. The environmental impacts of reactor accidents are considered in site-specific environmental reviews in individual proceedings for licensing and license renewal of reactors. No changes were made to the GEIS or Rule as a result of these comments.

(112-28-1) (112-3-2) (112-29-3) (112-11-4) (163-20-1) (250-5-8) (303-12) (326-34-1) (327-29-3) (328-1-3) (329-16-5) (348-7) (352-6) (358-8) (373-7) (419-4) (556-2-12) (587-1)

D.2.51.6 – COMMENT: A commenter described criticality safety concerns with storing fresh fuel assemblies in a spent fuel pool. The commenter described the potential for a peak in reactivity, and a possible nuclear criticality accident, caused by a pool draindown event, followed by use of flooding, foam, or water mist by firefighters.

RESPONSE: This comment is outside of the scope of the GEIS because it describes a possible accident involving fresh nuclear fuel, i.e., fuel that has not been used in a nuclear reactor core, which is only onsite during the reactor licensed life for operation, a timeframe that is outside the scope of the GEIS. The GEIS addresses the environmental consequences of continued storage of spent fuel. Operating nuclear power plants store fresh nuclear fuel onsite in preparation for refueling of the reactor core. Once operation of the reactor ceases, no fresh nuclear fuel is needed for the facility, and none would be stored in the spent fuel pool for the short-term, long-term and indefinite storage phases evaluated in the GEIS. The requirements for prevention of criticality in spent fuel pools (10 CFR 50.68) provide for consideration of storage of fresh fuel in the spent fuel pool, which occurs during reactor operation, and such storage is under NRC oversight. Further, the Rule applies to the continued storage of spent fuel, i.e., nuclear fuel that has been used in a reactor, not fresh fuel, which has not been used in a reactor.

Criticality in the spent fuel pool is discussed in Section 4.18 of the GEIS. No changes were made to the GEIS or Rule as a result of this comment.

(463-2-4)

D.2.51.7 – COMMENT: One commenter stated that the GEIS should evaluate the vulnerability of the population of the United States to sources of contamination from beyond U.S. borders, including contamination from Fukushima Dai-ichi. The commenter asked how the United States would deal with nuclear waste and contamination from a Fukushima-like event in the United States.

RESPONSE: The comment is outside the scope of the GEIS because it discusses risks of and response to sources of radioactive contamination other than those from continued storage of spent fuel at U.S. facilities. No changes were made to the GEIS or Rule as a result of these comments.

(522-4)

D.2.52 Out-of-Scope Comments – Fukushima

D.2.52.1 – COMMENT: A number of commenters expressed concern about the local, regional, and global environmental consequences of the accident at the Fukushima Dai-ichi nuclear power plant following the March 11, 2011, earthquake and subsequent tsunami in Japan. Commenters stated concerns about the large releases of radioactive material that resulted from

accidents involving the reactors at Fukushima Dai-ichi. Several commenters stated that onsite spent fuel storage, including the Unit 4 spent fuel pool, is also a source of large ongoing releases of radioactive material. Several commenters stated that onsite storage of radioactive waste contributed as a cause of the accident. One commenter described estimates of the costs and time required to clean up after the accident (up to $14 billion). Several commenters described concerns over the unloading of the spent fuel pool at the damaged Fukushima Dai-ichi Unit 4 reactor building.

RESPONSE: The NRC considers these comments to be out-of-scope because they describe concerns about the effects of the earthquake and severe reactor accidents at the Fukushima Dai-ichi Nuclear Power Station and the costs and time required to clean up after a reactor accident, not the continued storage of spent fuel.

The NRC disagrees with the comments regarding radioactive releases from spent fuel pools at Fukushima Dai-ichi. There were no large releases of radioactive material from the Fukushima Dai-ichi spent fuel pools. Further, the presence of stored spent fuel onsite at Fukushima Dai-ichi did not contribute to releases from the site.

The environmental impacts of accidents for at-reactor storage in spent fuel pools and casks are discussed in Section 4.18 of the GEIS, with additional supporting information on spent fuel pool fires in Appendix F of the GEIS. Economic damages as a result of spent fuel pool fires, which include costs of cleanup, are estimated in Appendix F. No changes were made to the GEIS or Rule as a result of these comments.

(18-2) (21-2) (23-8) (30-22-4) (30-8-7) (45-12-7) (67-2) (71-2) (112-8-3) (113-1) (113-3) (113-9) (120-3) (133-1) (144-2) (156-2) (158-5) (163-49-2) (163-16-3) (174-12) (205-9) (244-13-1) (245-25-2) (250-28-1) (250-59-3) (250-51-8) (325-32-2) (326-43-3) (328-13-4) (329-6-2) (438-2) (498-15) (501-2) (512-4) (515-2) (515-3) (518-2) (520-1) (521-1) (533-1) (539-4) (543-6) (552-2-10) (552-2-11) (566-2) (588-1) (609-2) (617-6) (623-3) (625-5) (631-1) (641-2) (656-1) (663-1) (670-2) (744-9) (759-1) (784-2) (801-1) (844-6)

D.2.52.2 – COMMENT: Many commenters described the lessons the United States should learn from the accident at Fukushima Dai-ichi. Commenters described problems like inadequate seismic hazard mapping, communication problems within the Japanese operator of Fukushima Dai-ichi, collusion between the Japanese nuclear industry and regulators, the potential for damage to spent fuel pools by natural phenomena, transfer of spent fuel to dry casks, siting of nuclear power plants, and overconfidence in the safety of plants, as lessons the United States should learn from the accident. One commenter urged the Commission to implement all of the NRC staff's post-Fukushima safety recommendations. Another commenter stated that the GEIS must address waste storage during licensed reactor operations. Several commenters stated that a discussion in the GEIS of the lessons learned from Fukushima should mention that stored spent fuel withstood the accident without significant damage. Some

commenters also called for an international response to Fukushima Dai-ichi and the establishment of a nuclear first-response team for future accidents.

RESPONSE: The NRC disagrees with the comments. Following the March 11, 2011 Fukushima Dai-ichi reactor accidents, the NRC considered and prioritized a number of significant regulatory actions and additional studies in response to lessons learned from the accidents. For example, in March 2012 the NRC issued orders to all operating nuclear power plants. These orders required nuclear power plants with operating reactors to: (1) enhance capability to maintain plant safety during a prolonged loss of electrical power, (2) install hardened containment vents on boiling water reactors with Mark I or Mark II containment designs, and (3) install reliable wide-range instruments to measure water level in spent fuel storage pools. At this time, the NRC has determined that lessons-learned from Fukushima about reactor accidents do not apply to decommissioning nuclear power plants that have spent fuel in continued storage in either spent fuel pools or dry casks. However, as any new lessons learned arise, the NRC will consider whether they should be applied to facilities with spent fuel in continued storage.

This rulemaking addresses the environmental impacts of continued storage; therefore, the rulemaking does not address waste storage during licensed reactor operations. The NRC acknowledges the comments that state that stored spent fuel withstood the Fukushima Dai-ichi accident without significant damage and notes that reports from the site support that statement. However, the GEIS presents information on the environmental risk from accidents related to continued storage. The consideration of these accidents includes natural events such as earthquakes and tsunami. No changes were made to the GEIS or Rule as a result of these comments.

(14-2) (45-8-4) (89-12) (126-2) (190-3) (232-1) (232-3) (244-11-10) (244-10-2) (244-14-7) (246-15-1) (246-9-1) (246-9-2) (250-26-3) (250-52-3) (264-2) (276-3) (326-4-3) (329-31-2) (380-4) (417-6) (566-5) (580-2) (610-6) (672-6) (685-8) (693-1-6) (703-2) (703-6) (708-1) (708-2) (708-4) (718-2-5) (718-3-6) (718-2-7) (718-2-9) (838-3) (838-7) (919-4-20) (926-3) (963-1) (963-3) (972-1) (974-2)

D.2.52.3 – COMMENT: Several commenters expressed concern over efforts by the Tokyo Electric Power Company beginning in November 2013 to unload spent fuel from the damaged Unit 4 reactor building spent fuel pool at the Fukushima Dai-ichi nuclear power plant, including the risks of a further accident. One commenter stated that this operation involves 1,500 brittle and potentially damaged spent fuel assemblies and may take up to one year to complete. The commenter noted that plant decommissioning will likely take decades and billions of dollars.

RESPONSE: These comments are out-of-scope because they raise concerns with removal of spent fuel and plant decommissioning following an operating reactor accident, not continued storage of spent fuel. The environmental impacts of reactor accidents are considered in site-

specific environmental reviews in individual proceedings for licensing and license renewal of reactors. The GEIS evaluates the environmental impacts of continued storage of spent fuel. No changes were made to the GEIS or Rule as a result of these comments.

(34-7) (112-7-7) (245-13-2) (245-14-2) (246-3-2) (251-1) (328-13-1) (410-12)

D.2.52.4 – COMMENT: Several commenters stated that all of the spent fuel remained protected after the Fukushima Dai-ichi accident and remains in safe storage today.

RESPONSE: The NRC agrees with these comments. The spent fuel pools at the boiling water reactors at Fukushima Dai-ichi are similar in design to those at boiling water reactors in the United States. Therefore, Japan's experience with a large earthquake and tsunami at the Fukushima Dai-ichi nuclear power plant demonstrates that spent fuel pools of this design are, as described in Section 2.1.2.1 and Appendix B of the GEIS, massive and durable structures constructed from thick, reinforced-concrete walls and slabs designed to be seismically robust. Similarly, Japan's experience with dry cask storage systems at the Fukushima Dai-ichi site demonstrates the ability of these systems to withstand considerable natural forces. No changes were made to the GEIS or Rule as a result of these comments.

(30-6-6) (45-13-3) (63-9) (112-7-4) (245-12-3) (280-9)

D.2.52.5 – COMMENT: One commenter stated that there is a lack of transparency in the Japanese information about the Fukushima accident. Citing a new Japan secrecy law, the commenter noted that public statements to the press in Japan can garner a 10-year prison term and fines. The commenter questioned how the NRC can effectively implement lessons learned from the Fukushima Dai-ichi accident without violating Japanese law.

RESPONSE: The NRC considers this comment to be out-of-scope because it does not address the environmental impacts of continued storage of spent fuel. No changes were made to the GEIS or Rule as a result of this comment.

(378-2)

D.2.52.6 – COMMENT: One commenter provided an alternative theory for the explosions in the Units 1, 3 and 4 reactor buildings at the Fukushima Dai-ichi nuclear power plant. The commenter believes that the "mushroom clouds" following hydrogen explosions in those structures were actually caused by nuclear energy released by criticality accidents. The commenter believes the criticality accidents were caused by precipitation under anoxic conditions of uranium and plutonium compounds, which settled to the bottom of the respective reactors in a supercritical configuration. The commenter believes a similar mechanism is responsible for radiation spikes in water storage containers at the Fukushima Dai-ichi site.

RESPONSE: The NRC considers these comments to be out-of-scope because they do not address the environmental impacts of continued storage of spent fuel. The NRC notes that these comments describe an alternative theory for the reactor accidents at the Fukushima Dai-ichi site that is not supported by any of the numerous scientific studies about the accident. No changes were made to the GEIS or Rule as a result of these comments.

(327-29-4) (498-7)

D.2.52.7 – COMMENT: One commenter stated that butterfly genes have mutated in Fukushima, Japan, as a result of radiation exposure. This commenter also stated that on September 12, 2012, the Unit 4 reactor building at Fukushima Dai-ichi sank 31 in. into the ground.

RESPONSE: The NRC considers this comment to be out-of-scope because the commenter has not described how potential radiation effects on butterflies or potential reactor building subsidence after the reactor accidents at Fukushima Dai-ichi are related to the environmental impacts of continued storage of spent fuel.

However, the NRC acknowledges that there is concern about human health effects of the radioactive releases from the accidents. The local government of Fukushima prefecture is conducting the Fukushima Health Management Survey to look for health effects on the people in the prefecture (FMU 2014). In February 2013, the World Health Organization issued a global report on the Fukushima accident that discusses a comprehensive assessment by international experts on the health risks (WHO 2013). The United Nations Scientific Committee on the Effects of Atomic Radiation is in the process of finalizing a major study to assess the radiation doses and associated effects on health and environment (UNSCEAR 2014). No changes were made to the GEIS or Rule as a result of these comments.

(250-22-3)

D.2.53 Out-of-Scope Comments – Yucca Mountain

D.2.53.1 – COMMENT: Commenters expressed support for and frustration about the status of the proposed Yucca Mountain repository, describing or criticizing the events in the legislative, executive, and judicial branches of the Federal government that led to the present situation. Several commenters discussed the relationship between the Yucca Mountain review and the Waste Confidence rulemaking. Other commenters noted that the NWPA represents the national policy regarding a repository and appealed to the NRC to take the necessary steps to complete its review of the DOE license application.

RESPONSE: The licensing process for any specific repository, including the proposed facility at Yucca Mountain, is outside the scope of the GEIS and Rule. Regardless of the status of any

proposed repository, this GEIS considers the environmental impacts only of the continued storage of spent fuel. The environmental impacts associated with disposal in a repository, repository funding, and other waste disposal issues are outside the scope of this GEIS and are not considered in this analysis. Further, the GEIS assumes in its assessment of impacts for the short-term and long-term timeframes that a repository will be available; in the indefinite timeframe the GEIS assumes that no repository becomes available. Based upon its review of the available information and as discussed further in Appendix B, the NRC believes that the most likely scenario is that a repository will be available by the end of the short-term timeframe.

The NRC acknowledges the commenters' expressions of support for a repository and concern about the repository siting and licensing process. In response to the decision of the Court of Appeals (*In re Aiken County*) and Commission Order CLI-13-08 (NRC 2013s), the NRC has resumed its review of the DOE's application for a proposed repository at Yucca Mountain. No changes were made to the GEIS or Rule as a result of these comments.

(30-23-9) (45-15-2) (45-5-3) (73-1) (112-17-2) (180-2) (180-7) (190-2) (201-5) (244-12-4) (245-34-5) (246-12-3) (250-4-2) (250-10-3) (250-13-3) (250-62-4) (250-4-5) (250-61-6) (286-3) (325-4-3) (325-26-5) (326-46-1) (326-46-2) (326-48-2) (327-36-5) (327-42-5) (328-5-6) (328-5-8) (355-1) (355-3) (355-8) (387-1) (390-3) (418-2) (544-1) (544-2) (685-10) (689-5) (692-2) (692-8) (718-2-2) (772-2) (859-3) (985-1)

D.2.53.2 – COMMENT: A commenter stated that the draft GEIS and proposed Rule do not promote or enforce the NWPA or the Standard Contract of 10 CFR Part 961 (requiring the Federal government to take title to and dispose of spent fuel) and in fact demonstrate that the NRC has an unreasonable view of spent fuel disposal actions. The commenter argued that the draft GEIS and the proposed Rule ignore the delays in the disposal program, breaches of the Standard Contract, violations of the NWPA, and the lack of Congressional appropriations for complying with these requirements. The commenter listed the various costs associated with not disposing of spent fuel, including court-awarded damages and settlements from the Judgment Fund (related to breaches of the Standard Contract), continued payments into the Nuclear Waste Fund, costs for expanding spent fuel storage facilities, greater decommissioning costs, and unknown future costs in the event that no disposal for spent fuel is ever made available. The commenter stated that the Federal government also refuses to abide by court decisions that clarify spent fuel disposal obligations, noting that there are also many court decisions relating to Standard Contract breaches.

Another commenter estimated that, through September 30, 2013, the Judgment Fund has paid $3.691 billion to nuclear power operators, of which $805 million is attributable to the NRC's decision to suspend the licensing proceeding. This commenter also stated that the nuclear industry benefits from the NRC's decision to stop the Yucca Mountain licensing proceeding because its spent fuel management expenses are being paid by the taxpayer through the Judgment Fund while the industry's investment in the Nuclear Waste Fund is preserved, and

because power operators retain title to spent fuel that has the energy equivalent of over six billion barrels of oil. The commenter asked whether the NRC has considered the appearance of collusion between the NRC and the nuclear industry.

Another commenter added that the uncertainty stemming from the NRC's repository-related decisions causes investors to doubt the future availability of the consistent, large-scale production of electricity needed for industry in the United States. The commenter noted that investors are instead going overseas.

RESPONSE: The NRC disagrees with the comment concerning the GEIS's relationship to spent fuel disposal policy and requirements. The GEIS is an environmental analysis of the continued storage of spent fuel; it does not promote or enforce the NWPA or the Standard Contract. In the GEIS, the NRC has accounted for scenarios involving both the availability of a repository (in two timeframes) and the unavailability of a repository; thus, the GEIS does acknowledge the uncertainty in the repository program. Further, these comments, which are related to the Yucca Mountain proceeding and other unrelated litigation regarding the failure of the Federal government to take title to commercially generated spent fuel in accordance with contracts signed by contract holders and the DOE, are outside the scope of this GEIS. Any potential benefits or costs to plant owners and operators in stopping the Yucca Mountain repository license application review were not a factor in the NRC's decision to stop the license application review. In addition, the NRC has resumed its review of the Yucca Mountain application in response to the decision of the Court of Appeals (*In re Aiken County*) and Commission Order CLI-13-08, November 18, 2013 (NRC 2013s).

The NRC acknowledges the concerns about continuing costs associated with storing spent fuel, including those from lawsuits concerning the Federal government's obligation to take title to the waste. Costs related to continued storage activities have been added to Chapter 2 of the GEIS. No changes were made to the Rule as a result of these comments.

(355-5) (692-15) (692-19) (692-5) (704-4) (704-5) (704-9)

D.2.53.3 – COMMENT: A commenter stated that the NRC's decisions and actions that led to the *In re Aiken County* ruling by the Court of Appeals, which directs the NRC to resume its repository license application review, undermine the agency's reputation as an independent and transparent regulator. The commenter asserted that the NRC's management and oversight systems need to be sufficiently robust to withstand political influences that could lead to unlawful NRC actions. The commenter noted that the NRC Chairman's prepared remarks for presentation on November 11, 2013, at the American Nuclear Society's Winter Meeting suggest that the NRC is in denial regarding the effect of the Court of Appeals decision and that it views the NWPA to be an "okay-to-violate" statute.

The commenter suggested that, before finalizing the GEIS and Rule, the NRC identify the failures of the agency's management and oversight systems that led to the adverse ruling in *In re Aiken County* and identify corrective actions to address these failures and their financial, security, health, safety, and environmental ramifications. The commenter stated that such a review is important to determine whether there are other statutes and regulations that the NRC is violating. In arguing for this review, the commenter noted that the public, the nuclear industry, and the NRC staff would probably appreciate answers to questions relating to the Commission's review and decision-making concerning the Yucca Mountain licensing process, noting specifically that more than a year passed between the Secretary's Order of June 30, 2010 establishing a schedule and the Commission's September 9, 2011 Order sustaining the Atomic Safety and Licensing Board ruling on the DOE's request to withdraw its license application. The commenter also asked why the NRC had not requested sufficient funding from Congress to complete the licensing process.

The commenter stated that, without this review of management and oversight systems and corrective action, the NRC cannot say that the waste confidence rulemaking complies with any governing statute. The commenter stated further that, without such a review, the GEIS assumption concerning institutional controls is invalid, because the NRC has not demonstrated it has control.

RESPONSE: The NRC disagrees with the comments. The NRC prepared the GEIS and Rule in accordance with its statutory responsibilities under the AEA, NEPA, and the APA. The NRC believes that the GEIS and Rule fully comply with these statutes and the NRC's regulations. The NRC has a robust management structure that strives to ensure compliance with all relevant statutes and regulations. In those rare circumstances where the NRC's actions are overturned by a Federal court, the NRC takes timely and appropriate action to comply with the court's directives, as the NRC has done with this GEIS.

The NRC appreciates the comments' concerns about the Yucca Mountain litigation and the status of the NRC's ongoing review of the application. However, the comments related to the Yucca Mountain litigation and licensing review do not provide information related to the scope of the GEIS, and are therefore not considered further in this context. No changes were made to the GEIS or Rule as a result of these comments.

(355-7) (692-1) (692-10) (692-11) (692-13) (692-14) (692-16) (692-17) (692-20) (692-3) (692-4)

D.2.53.4 – COMMENT: A commenter stated that the NRC should abide by the most recent decision of the Court of Appeals (*NARUC v. DOE*) and ask permission to stop collecting the Nuclear Waste Fund fee because, the commenter stated, there seems to be no plan for establishing permanent geologic storage.

RESPONSE: The DOE, and not the NRC, collects the fee for the Nuclear Waste Fund, and the NRC has no control over the collection of fees for the Nuclear Waste Fund. In the decision to

which the commenter referred, the Court of Appeals ordered the Secretary of Energy "to submit to Congress a proposal to change the fee to zero until such a time as either the Secretary chooses to comply with the Act as it is currently written, or until Congress enacts an alternative waste-management plan." The NRC was not a party to the case and was not directed to do anything by the Court. No changes were made to the GEIS or Rule as a result of this comment.

(329-12-9)

D.2.53.5 – COMMENT: A commenter stated that the NRC's decisions concerning the repository licensing process served to foreclose the placement of spent fuel in a remote location and to prolong by at least 41 months the risks associated with the storage of spent fuel at plant sites. The commenter further noted that this delay has required plant operators to transfer additional spent fuel from the pools to dry casks, which presents its own risks. The commenter also cited weather-related degradation of casks during prolonged dry storage. The commenter further noted that the NRC's decisions to halt the repository licensing process also have a national security aspect, because prolonging dry storage would also prolong the increased chances for a terrorist attack.

RESPONSE: The NRC's decisions regarding the Yucca Mountain application are outside the scope of the GEIS and Rule. This GEIS analyzes the environmental impacts of storing spent fuel for extended periods of time, including the need to store indefinitely if a repository does not become available. However, as stated in the GEIS, the NRC continues to believe that a repository is likely to become available within 60 years of the end of a reactor's licensed life for operation. Further, in response to the decision of the Court of Appeals (*In re Aiken County*) and Commission Order CLI-13-08 (NRC 2013s), the NRC has resumed its review of the DOE's application for a proposed repository at Yucca Mountain. No changes were made to the GEIS or Rule as a result of this comment.

(692-6)

D.2.53.6 – COMMENT: Commenters expressed their disapproval of the proposed high-level radioactive waste repository at Yucca Mountain, stating it has already failed, that the United States has no policy and no plan for the permanent disposal of spent fuel. Some commenters felt that the GEIS assumption that there will be a repository predetermines the outcome of a repository licensing process. Many commenters expressed concern about the social and political process behind the selection and cancellation of Yucca Mountain, including the amount of money already spent on the project. Other commenters expressed concern about the technical feasibility, capacity, and underlying analysis supporting the DOE's application for the Yucca Mountain facility.

RESPONSE: The licensing process for any specific repository, including the proposed facility at Yucca Mountain, is outside the scope of the GEIS and Rule. The assumption in the GEIS that a

repository will be available for the short-term and long-term timeframes is based on the NRC's review of available information regarding the technical feasibility of a repository, the DOE's current spent fuel management plans, and a review of relevant domestic and international experience with siting, constructing, and operating a nuclear waste repository. The analysis in the GEIS does not assume that a specific repository, such as the proposed facility at Yucca Mountain, becomes available. The NRC has not predetermined the outcome of any licensing proceeding, including the ongoing proceeding regarding the DOE's Yucca Mountain application, and has assessed three different scenarios, including one that does not assume the licensing and construction of any repository. Regardless of the status of any proposed repository, this GEIS considers the environmental impacts only of the continued storage of spent fuel. The environmental impacts associated with disposal in a repository, repository funding issues, and other waste disposal issues are outside the scope of this GEIS. No changes were made to the GEIS or Rule as a result of these comments.

(23-6) (163-35-4) (163-22-8) (245-45-2) (328-15-4) (329-4-2) (329-19-4) (329-8-8) (545-1) (562-4) (611-27) (646-9) (723-3) (755-3) (823-14) (823-9) (834-3) (867-1-20) (919-1-10) (919-2-12) (919-2-19) (919-1-9) (927-4) (929-17)

D.2.54 Out-of-Scope Comments – Opposition to Nuclear Power

D.2.54.1 – COMMENT: Numerous commenters expressed opposition to nuclear power, the nuclear power industry, and the NRC. Comments included calls to stop generating additional spent fuel, to stop licensing and relicensing nuclear facilities, to close and decommission all nuclear facilities, and to replace nuclear power with renewable energy. In expressing their opposition to nuclear power, commenters cited safety, environmental, and cost concerns regarding the operation of nuclear plants and the storage and disposal of spent fuel.

RESPONSE: The NRC acknowledges the comments opposing nuclear power. Comments opposing nuclear power are beyond the scope of the GEIS and Rule. This rulemaking addresses the environmental impacts of storage of spent fuel beyond the licensed life of a reactor and is supported by the analysis in the GEIS; the rulemaking does not address reactor operating issues, generation and storage of spent fuel during the licensed life of a reactor, or the ultimate disposal of spent fuel. Further, the NRC is an independent regulator that does not promote nuclear or other types of energy. No changes were made to the GEIS or Rule as a result of these comments.

(2-1) (3-1) (5-1) (8-2) (9-1) (10-1) (11-1) (12-1) (14-1) (15-1) (18-1) (19-1) (20-2) (23-1) (23-11) (24-1) (28-2) (30-13-1) (30-2-1) (30-21-1) (30-12-10) (30-15-11) (30-11-2) (30-5-2) (30-24-3) (30-2-4) (30-22-5) (30-8-5) (30-5-6) (31-1) (32-1) (33-1) (35-1) (37-1) (38-1) (39-4) (40-1) (44-1) (45-10-1) (45-12-1) (45-6-1) (45-8-1) (45-10-2) (45-1-3) (45-1-4) (45-8-7) (45-6-8) (45-8-8) (46-1) (49-1) (51-1) (52-2) (54-1) (55-1) (58-1) (59-1) (59-11) (62-1) (64-1) (64-7) (65-3) (67-1) (69-1) (74-2) (75-3) (77-1) (78-1) (78-2) (81-1) (82-1) (82-2) (83-1) (86-1) (86-6) (88-2) (89-1) (90-1)

(92-2) (99-1) (103-1) (104-1) (107-1) (109-1) (112-10-1) (112-24-1) (112-30-1) (112-33-1) (112-6-1) (112-5-10) (112-18-2) (112-6-2) (112-22-3) (112-30-4) (112-10-5) (112-22-5) (112-11-6) (112-6-6) (112-8-6) (112-11-7) (112-31-7) (112-11-9) (114-1) (114-3) (116-1) (116-2) (116-6) (117-2) (117-3) (124-1) (125-2) (125-5) (126-4) (127-5) (128-1) (129-1) (129-3) (132-1) (132-2) (133-3) (134-1) (135-1) (136-11) (139-3) (140-1) (141-2) (143-3) (145-4) (147-1) (154-1) (154-2) (155-3) (156-1) (156-3) (157-1) (159-2) (159-3) (161-2) (163-23-1) (163-27-1) (163-3-1) (163-43-1) (163-44-1) (163-47-1) (163-10-2) (163-14-2) (163-35-2) (163-36-2) (163-44-2) (163-48-2) (163-12-3) (163-15-3) (163-27-3) (163-28-3) (163-39-3) (163-40-3) (163-41-3) (163-9-3) (163-28-4) (163-31-4) (163-42-4) (163-48-4) (163-15-5) (163-24-5) (163-15-6) (163-34-6) (163-35-6) (163-28-7) (163-28-8) (163-48-8) (163-22-9) (163-28-9) (165-1) (167-1) (168-1) (169-1) (171-1) (173-1) (174-11) (174-2) (174-4) (175-2) (175-3) (177-2) (184-1) (186-1) (187-3) (187-4) (188-1) (189-5) (189-8) (196-2) (196-3) (196-6) (196-7) (198-1) (200-1) (216-1) (219-13) (226-3) (226-4) (229-1) (230-7) (232-5) (233-7) (237-1) (237-3) (238-1) (240-1) (240-3) (241-2) (241-3) (243-2) (244-10-1) (244-6-1) (244-14-10) (244-5-2) (244-10-3) (244-15-3) (244-10-4) (244-5-4) (244-6-4) (244-5-5) (244-6-7) (245-11-1) (245-14-1) (245-22-1) (245-27-1) (245-36-1) (245-39-1) (245-46-1) (245-47-1) (245-49-1) (245-50-1) (245-51-1) (245-7-1) (245-8-1) (245-21-2) (245-24-2) (245-32-2) (245-35-2) (245-44-2) (245-49-2) (245-11-3) (245-17-3) (245-3-3) (245-38-3) (245-42-3) (245-48-3) (245-52-3) (245-7-3) (245-22-4) (245-10-5) (245-6-5) (245-37-6) (245-29-7) (245-31-7) (245-14-8) (246-27-1) (246-31-1) (246-29-12) (246-11-2) (246-15-2) (246-23-2) (246-27-2) (246-30-2) (246-15-3) (246-16-3) (246-23-3) (246-31-3) (246-11-4) (246-27-4) (246-30-4) (246-31-4) (246-15-5) (246-23-5) (246-3-5) (246-6-5) (246-29-6) (246-11-7) (246-16-7) (246-17-7) (246-29-9) (249-15) (250-11-1) (250-12-1) (250-23-1) (250-26-1) (250-34-1) (250-39-1) (250-44-1) (250-47-1) (250-48-1) (250-49-1) (250-5-1) (250-51-1) (250-55-1) (250-60-1) (250-7-1) (250-9-1) (250-20-2) (250-45-2) (250-46-2) (250-49-2) (250-50-2) (250-59-2) (250-60-2) (250-63-2) (250-66-2) (250-8-2) (250-9-2) (250-17-3) (250-2-3) (250-33-3) (250-46-3) (250-51-3) (250-60-3) (250-66-3) (250-17-4) (250-30-4) (250-33-4) (250-34-4) (250-42-4) (250-46-4) (250-48-4) (250-50-4) (250-59-4) (250-60-4) (250-8-4) (250-29-5) (250-42-5) (250-49-5) (250-5-5) (250-52-5) (250-59-5) (250-64-5) (250-31-6) (250-39-6) (250-69-6) (250-8-6) (250-30-7) (250-50-7) (250-66-7) (250-30-8) (250-50-8) (250-28-9) (251-3) (252-6) (252-7) (254-1) (256-4) (257-2) (259-3) (259-4) (261-1) (263-1) (264-3) (265-1) (266-1) (270-1) (271-1) (272-1) (272-2) (272-3) (274-3) (276-9) (277-5) (277-9) (282-1) (288-4) (289-3) (290-4) (291-5) (292-3) (293-5) (295-1) (296-1) (297-2) (299-1) (300-1) (301-2) (302-1) (303-15) (303-5) (304-1) (305-2) (309-5) (309-7) (310-1) (314-1) (314-4) (322-1) (322-2) (322-3) (322-6) (325-15-2) (325-19-3) (325-27-3) (325-9-3) (325-27-4) (325-28-4) (325-9-4) (325-27-5) (325-33-6) (325-28-7) (325-29-7) (326-10-1) (326-12-1) (326-19-1) (326-20-1) (326-23-1) (326-26-1) (326-31-1) (326-38-1) (326-40-1) (326-45-1) (326-5-1) (326-50-1) (326-55-1) (326-21-2) (326-22-2) (326-29-2) (326-35-2) (326-38-2) (326-39-2) (326-53-2) (326-54-2) (326-57-2) (326-6-2) (326-26-3) (326-40-3) (326-51-3) (326-55-3) (326-61-3) (326-64-3) (326-10-4) (326-14-4) (326-23-4) (326-44-4) (326-55-4) (326-58-4) (326-60-4) (326-61-4) (326-15-5) (326-53-5) (326-60-7) (326-15-8) (327-15-1) (327-21-1) (327-24-1) (327-25-1) (327-29-1) (327-32-1) (327-33-1) (327-35-1) (327-40-1) (327-5-1) (327-7-1) (327-21-2) (327-26-2) (327-27-2) (327-3-2) (327-32-2) (327-39-2) (327-40-2) (327-42-2) (327-

44-2) (327-6-2) (327-14-3) (327-22-3) (327-23-3) (327-3-3) (327-35-3) (327-4-3) (327-30-4) (327-32-4) (327-39-4) (327-42-4) (327-44-4) (327-5-4) (327-7-4) (327-8-4) (327-20-5) (327-21-5) (327-23-5) (327-25-5) (327-5-5) (327-9-5) (327-22-6) (327-2-7) (327-39-7) (327-42-7) (327-11-9) (328-15-1) (328-4-1) (328-13-2) (328-15-2) (328-16-2) (328-17-2) (328-6-2) (328-15-3) (328-15-5) (328-16-5) (328-16-6) (328-9-6) (328-16-7) (328-16-9) (328-4-9) (329-28-1) (329-29-1) (329-31-1) (329-1-2) (329-17-2) (329-20-2) (329-23-2) (329-30-2) (329-32-2) (329-35-2) (329-1-3) (329-28-3) (329-28-4) (329-34-4) (329-4-4) (329-29-5) (329-34-5) (329-4-5) (329-7-6) (329-28-7) (329-8-9) (332-1) (332-3) (333-4) (334-2) (334-4) (336-14) (336-4) (341-2-10) (341-1-8) (348-13) (348-15) (349-1) (349-4) (349-5) (352-13) (352-15) (353-1) (358-12) (358-9) (359-2) (361-1) (361-3) (362-1) (362-3) (366-2) (367-1) (368-1) (368-5) (373-14) (373-15) (377-1-11) (377-5-14) (377-5-15) (377-6-7) (377-1-9) (380-1) (380-2) (381-6) (389-2) (392-1) (393-1) (394-1) (403-2) (403-3) (403-4) (404-2) (405-1) (405-2) (405-3) (406-6) (411-1) (413-1) (413-3) (415-1) (416-5) (417-13) (417-14) (419-12) (419-14) (419-6) (419-8) (428-1) (428-2) (429-1) (435-3) (436-1) (436-5) (437-1) (437-3) (441-3) (443-5) (445-3) (445-5) (446-2) (446-4) (447-1-1) (447-2-15) (447-2-5) (450-7) (452-1) (453-6) (454-10) (460-1) (462-1) (468-1) (469-2) (471-1) (474-2) (475-2) (475-3) (477-3) (477-5) (478-1) (480-2) (483-1) (483-4) (490-7) (492-1) (493-2) (498-12) (498-14) (498-4) (498-6) (498-9) (503-1) (504-1) (506-1) (508-2) (511-2) (512-7) (516-1) (518-1) (518-3) (522-2) (523-1) (523-3) (524-1) (525-1) (526-1) (526-3) (528-3) (531-2-13) (531-1-17) (531-1-18) (531-1-2) (531-2-2) (531-2-27) (531-2-28) (536-1) (536-2) (537-7) (537-8) (539-2) (539-5) (543-3) (543-5) (546-2) (546-3) (552-1-2) (552-3-6) (559-3) (563-2) (564-1) (564-2) (564-4) (565-1) (566-3) (570-1) (571-3) (573-3) (575-1) (577-1) (581-1) (581-3) (582-1) (582-2) (586-1) (586-2) (589-2) (590-2) (596-2) (597-1) (597-3) (599-1) (599-3) (600-1) (602-2) (603-1) (603-24) (603-26) (603-4) (603-7) (608-1) (608-4) (611-52) (611-59) (611-60) (612-6) (613-2) (616-3) (617-2) (617-3) (617-5) (617-7) (617-9) (621-2) (623-1) (625-2) (625-6) (626-1) (628-6) (628-7) (628-8) (630-2) (633-7) (635-1) (640-2) (643-1) (645-2) (646-14) (648-14) (648-15) (648-2) (648-3) (653-1) (653-2) (656-2) (657-1) (658-2) (660-10) (662-1) (662-12) (662-3) (662-6) (663-2) (670-1) (670-3) (670-4) (670-5) (671-3) (676-1) (677-1) (677-2) (679-4) (679-5) (686-10) (686-11) (686-13) (686-15) (686-16) (686-8) (687-1) (687-2) (687-4) (687-5) (687-9) (688-1) (690-4) (690-5) (693-1-2) (695-2) (696-1) (700-2) (701-19) (701-20) (702-2) (702-5) (703-12) (703-7) (705-2) (709-3) (711-25) (712-2) (712-3) (712-5) (713-11) (713-6) (713-7) (713-8) (713-9) (719-4) (719-6) (721-1) (722-1) (722-7) (724-6) (728-8) (729-2) (730-2) (730-3) (734-3) (734-4) (734-7) (735-2) (738-20) (738-3) (740-1) (741-5) (744-11) (744-12) (744-13) (744-15) (744-5) (744-8) (746-1) (747-1) (748-1) (750-1) (751-1) (751-3) (752-1) (757-1) (757-16) (757-17) (760-1) (763-2) (767-2) (768-1) (770-3) (771-2) (773-1) (773-3) (774-10) (775-2) (775-3) (775-5) (777-1) (779-1) (779-2) (780-1) (780-2) (784-1) (789-5) (791-2) (792-1) (792-2) (801-2) (811-5) (813-2) (813-4) (814-2) (815-10) (821-13) (822-1) (823-12) (823-24) (823-5) (823-59) (823-63) (823-7) (823-74) (823-78) (823-8) (823-83) (824-2) (826-4) (828-1) (829-1) (829-3) (834-7) (834-8) (835-1) (836-31) (838-4) (838-8) (839-1) (839-2) (840-2) (840-8) (842-1) (843-3) (844-2) (844-3) (844-7) (844-9) (845-1) (846-3) (848-3) (849-1) (852-2) (853-1) (855-4) (856-3) (857-1) (860-10) (861-1) (861-3) (861-4) (861-5) (862-6) (864-15) (864-16) (864-8) (868-4) (868-5) (870-1) (870-3) (871-2) (874-1) (881-3) (883-6) (888-7) (888-8) (890-1) (890-3) (890-5) (890-7) (890-

9) (901-1) (901-5) (902-6) (903-3) (904-2) (907-1) (910-6) (910-8) (919-3-11) (919-4-13) (924-1) (924-2) (924-3) (930-2-5) (931-2) (932-1) (934-5) (935-5) (935-7) (936-1) (936-3) (936-4) (936-7) (939-2) (941-2) (945-9) (946-1) (946-5) (962-1) (964-1) (974-1) (974-3) (987-1) (990-2) (998-1) (1004-8) (1007-6)

D.2.55 Out-of-Scope Comments – Support for Nuclear Power

D.2.55.1 – COMMENT: Many commenters expressed support for nuclear energy.

RESPONSE: The NRC acknowledges the comments supporting nuclear energy; however, these comments are beyond the scope of this rulemaking. No changes were made to the GEIS or Rule as a result of these comments.

(30-9-1) (30-18-2) (30-19-2) (30-20-3) (30-3-3) (30-19-4) (30-23-4) (30-9-4) (30-18-5) (30-20-5) (30-20-6) (45-4-1) (45-9-1) (45-9-2) (45-9-3) (45-13-4) (45-5-4) (45-9-4) (45-9-6) (57-6) (60-1) (60-3) (60-5) (61-2) (61-5) (87-2) (100-2) (100-21) (100-22) (100-24) (100-25) (100-26) (100-4) (112-1-2) (112-1-3) (112-21-3) (112-27-3) (112-12-5) (112-25-5) (112-25-8) (122-1) (138-10) (138-6) (138-8) (138-9) (148-1) (148-3) (150-1) (150-3) (153-1) (153-4) (163-17-1) (163-18-1) (163-19-1) (163-29-1) (163-19-2) (163-30-2) (163-19-3) (163-29-3) (163-18-4) (163-19-4) (163-11-5) (163-18-6) (163-29-8) (176-1) (180-8) (181-4) (183-4) (192-10) (192-12) (192-14) (201-2) (212-1) (212-4) (212-6) (213-1) (213-2) (213-4) (244-12-1) (244-2-1) (244-11-12) (244-7-2) (244-1-4) (244-12-5) (244-7-5) (244-9-6) (244-9-8) (245-1-1) (245-16-1) (245-18-1) (245-23-1) (245-28-1) (245-33-1) (245-4-1) (245-9-1) (245-18-2) (245-26-2) (245-34-2) (245-1-3) (245-16-3) (245-33-3) (245-34-4) (245-9-4) (245-12-5) (246-1-1) (246-10-1) (246-18-1) (246-20-1) (246-8-2) (246-18-3) (246-21-3) (246-20-4) (246-20-6) (250-10-1) (250-15-1) (250-18-1) (250-19-1) (250-21-1) (250-32-1) (250-37-1) (250-41-1) (250-54-1) (250-57-1) (250-61-1) (250-18-2) (250-24-2) (250-32-2) (250-36-2) (250-54-2) (250-57-2) (250-58-2) (250-67-2) (250-70-2) (250-14-3) (250-41-3) (250-43-3) (250-10-4) (250-3-4) (250-35-4) (250-41-4) (250-37-5) (250-58-5) (250-62-5) (250-70-5) (250-18-6) (250-4-6) (250-57-7) (250-6-7) (250-61-7) (253-1) (253-3) (273-1) (273-5) (278-1) (307-1) (307-3) (308-1) (312-2) (325-16-1) (325-4-1) (325-13-2) (325-5-2) (325-13-3) (325-16-3) (325-13-4) (325-5-5) (325-5-6) (326-16-1) (326-17-1) (326-25-1) (326-41-1) (326-48-1) (326-33-2) (326-37-2) (326-25-3) (326-16-4) (326-18-4) (326-3-4) (327-43-1) (327-16-2) (327-36-4) (328-10-1) (328-5-1) (328-10-4) (328-5-9) (329-2-2) (329-2-3) (347-10) (347-11) (347-4) (347-6) (347-7) (347-8) (347-9) (360-1) (374-2) (382-2) (390-1) (390-4) (408-4) (418-3) (448-2) (449-1) (456-2) (489-1) (535-1) (538-3) (568-2) (598-2) (598-3) (598-4) (642-6) (674-1) (674-2) (674-6) (674-7) (674-9) (685-1) (802-2) (825-2) (825-6) (881-2) (881-7) (881-8) (948-1) (971-2)

D.3 List of Unique Comment Authors

Table D-3 lists commenters who provided unique (i.e., non-form letter) comment submissions on the draft GEIS and proposed Rule. A table of form letter authors is provided in a separate document titled, *Comments on the Waste Confidence Draft Generic Environmental Impact Statement and Proposed Rule*, which is located in ADAMS under accession number ML14154A175.

Table D-3. Individuals Providing Unique Comments on the Draft GEIS and Proposed Rule

Commenter	Affiliation (if stated)	ADAMS Accession #	Correspondence ID
Abbott, Dana		ML13329A684	257
Abbott, Sandra		ML14027A588	947
Abdro, Ann		ML14001A016	752
Abendano, Juan		ML13323B474	250-41
Adam, Peter	Santa Barbara County, California	ML13360A113	682
Adams, Grace		ML13275A664	13
Adams, Grace		ML13303B533	97
Adams, Grace		ML13351A305	439
Affonso, Jane		ML13329B078	271
Agnew, David		ML13320A012	419
Agnew, David	Cape Downwinders	ML13339A173	348
Agnew, David	Cape Downwinders	ML13310B069	112-11
AGreen Road Project, Anonymous		ML13353A025	498
Aguilar, Margaret		ML13330C033	245-45
Allen, Judy		ML13318A129	163-24
Allen, Rick	United Association of Plumbers and Pipefitters	ML13282A605	45-13
Allerton, George		ML13365A338	726
Amos, T.J.		ML13323B474	250-52
Amram, David		ML13308C106	117
Amram, David		ML13350A648	476
Amram, David		ML13318A129	163-26
Amthony, Elizabeth		ML14001A067	794
Anderson, Cody		ML14009A004	885
Anderson, Janet M.		ML14014A078	901
Andrews, Richard		ML13360A317	447
Andrews, Richard		ML13294A563	59
Andrews, Richard		ML13282A605	45-6

Table D-3. Individuals Providing Unique Comments on the Draft GEIS and Proposed Rule (cont'd)

Commenter	Affiliation (if stated)	ADAMS Accession #	Correspondence ID
Anonymous		ML13275A663	7
Anonymous		ML13280A840	47
Anonymous		ML13320A015	200
Anonymous		ML13320A026	210
Anonymous		ML13336A379	281
Anonymous		ML13351A008	412
Anonymous		ML13351A018	425
Anonymous		ML13353A622	518
Anonymous		ML13353A640	524
Anonymous		ML13353A731	533
Anonymous		ML13355A014	594
Anonymous		ML13358A140	623
Anonymous		ML13358A154	626
Anonymous		ML13358A167	629
Anonymous		ML13358A428	661
Anonymous		ML13359A013	676
Anonymous		ML13359A014	677
Anonymous		ML13365A340	728
Anonymous		ML14001A020	754
Anonymous		ML14001A046	777
Anonymous		ML14007A005	844
Anonymous		ML14007A036	857
Anonymous		ML14008A349	870
Anonymous		ML14008A431	874
Anonymous		ML14008A433	876
Anonymous		ML14008A434	877
Anonymous		ML14008A437	880
Anonymous		ML14008A429	896
Anonymous		ML14027A588	947
Anonymous, Brian		ML13359A007	670
Anonymous, Debra		ML14006A372	829
Anonymous, Janet		ML13361A014	933
Anonymous, JEC		ML13353A621	517
Anonymous, Jeff		ML13358A169	630
Anonymous, Jill		ML14027A588	947

Table D-3. Individuals Providing Unique Comments on the Draft GEIS and Proposed Rule (cont'd)

Commenter	Affiliation (if stated)	ADAMS Accession #	Correspondence ID
Anonymous, Scott		ML13355A009	590
Apted, Michael		ML13282A605	45-7
Arauz, Jorge		ML13309A886	143
Archie, Jeff	South Carolina Electric & Gas	ML13323B474	250-3
Armer, Sunny	Raging Grannies WOWW	ML13318A129	163-25
Armerding, Christopher		ML13304C023	105
Arnason, Deb		ML13268A101	18
Arnason, Deb		ML13319B249	175
Arnason, Deb		ML14008A365	890
Arnason, Deb		ML13323B474	250-42
Arnold, James		ML13352A519	480
Arnott, Melissa		ML13353A643	526
Arrabaca, Andrew		ML13350A652	396
Ashe, Kenneth		ML13323B474	250-23
Atlee, Susan		ML13346A226	389
August, Bernard	Committee Against Plutonium Economics	ML14001A014	750
Avilla, Karen	City of Carson, California	ML13329A678	253
Azulay, Jessica	Alliance for a Green Economy	ML13318A129	163-34
Baade, Joanne	City of San Clemente, California	ML13357A318	605
Babski, Mark		ML13355A003	584
Bagwell, Charles		ML13336B471	321
Bailey, Savannah	CASEnergy Coalition	ML13308C179	122
Bailey, Savannah	CASEnergy Coalition	ML13318A129	163-29
Bailey, Savannah	CASEnergy Coalition	ML13339A942	325-16
Bailey, Savannah	CASEnergy Coalition	ML13339A946	326-25
Baker, Anna		ML13345A077	371
Baker, Anna		ML13310B069	112-9
Baker, Crystal	North American Indigenous Peoples Caucus	ML13339A946	326-45
Baker, Hannelore		ML13336B479	322
Baker, Helen		ML13351A307	441
Baker, Sheila		ML13329A675	251
Baker, Tammera	Palo Verde Nuclear Generating Station	ML13282A605	45-9
Balgemann, Dennis		ML13298A769	81

Table D-3. Individuals Providing Unique Comments on the Draft GEIS and Proposed Rule (cont'd)

Commenter	Affiliation (if stated)	ADAMS Accession #	Correspondence ID
Balke, Karl		ML13338A732	333
Bandfield, Gary		ML14027A588	947
Barczak, Sara	Southern Alliance for Clean Energy	ML13345B014	329-27
Barczak, Sara	Southern Alliance for Clean Energy	ML13345B014	329-5
Barilla, Frank		ML13323B474	250-37
Barker, Laurenn		ML13365A337	725
Barnes, Kathryn		ML13351A139	416
Barnes, Kathyrn		ML13340A572	327-8
Bartlett, Bill	Green Party	ML13282A605	45-8
Barton, Jim		ML13319A919	167
Bast, Nancy		ML13351A484	450
Batobato, Alicia		ML13353A009	496
Bauer, Scott	STARS	ML13359A012	675
Bay, Miki		ML14007A028	850
Bean, Judith		ML13339A946	326-11
Beane, Gary		ML13354C106	577
Beccia, John		ML13338A729	330
Becker, Joanna		ML13360A309	696
Becker, Rochelle		ML13339A942	325-3
Behling, Steve		ML13304C034	100
Behling, Steve		ML13351A472	100
Bennett, Mary		ML14027A588	947
Bennett, Nathan		ML13330B840	246-10
Bergier, Kim		ML13357A307	597
Bergier, Kim		ML13357A312	599
Berlincourt, Kerry		ML13340A572	327-40
Bernhoft, Eric		ML13358A378	635
Bernstein, Patricia		ML13353A625	519
Bessette, Paul	Counsel for Entergy Nuclear Operations, Inc	ML13360A316	697
Betancourt, Nelson		ML13330B643	244-10
Bethlenfalvay, Marina		ML14014A096	907
Bettega, Gayle		ML14006A440	835
Bevill, Bernard	Arkansas Department of Health	ML14015A083	913
Bibb, William		ML13353A457	512

Table D-3. Individuals Providing Unique Comments on the Draft GEIS and Proposed Rule (cont'd)

Commenter	Affiliation (if stated)	ADAMS Accession #	Correspondence ID
Biddle, Lynn		ML13269A407	21
Biersdorf, John		ML13344B149	328-10
Bilenko, Stephanie		ML13330C033	245-37
Bird, Melissa		ML13323C013	216
Bird, Melissa		ML13345A070	367
Black, Ryan		ML13298A209	72
Blackburn, Lee		ML13354A000	576
Blackburn, Lee		ML13354C107	578
Blacker, Paul		ML14008A152	343
Blake, Elisabeth		ML13357A818	613
Blankenmyer, Eric		ML13350A671	400
Blee, David	U.S. Nuclear Infrastructure Council	ML13277A455	30-23
Blevins, Eric		ML13323B474	250-50
Bluestein, Bonnie		ML13358A379	636
Bluestein, Bonnie		ML13330C033	245-51
Bogdan, Andrew		ML14001A040	772
Bogen, Doug	Seacoast Anti-Pollution League	ML13360A105	680
Bogen, Doug	Seacoast Anti-Pollution League	ML13310B069	112-5
BojeLebs, Nannette		ML13359A001	664
Bolognini, Franceseca		ML13268A331	14
Bonanno, Jerry	Nuclear Energy Institute	ML13277A455	30-16
Bonanno, Jerry	Nuclear Energy Institute	ML13318A129	163-38
Bonney, Mary		ML13358A423	656
Bonniwell, Colleen		ML14008A184	744
Bonniwell, Colleen		ML13344B149	328-16
Boosinger, Marilynn		ML13354B896	570
Borchmann, Patricia		ML13323C022	218
Borchmann, Patricia		ML13336A546	284
Borchmann, Patricia		ML13339A942	325-11
Borchmann, Patricia		ML14006A362	866
Border, Gary		ML13340A572	327-16
Borie, Edith		ML13298A199	71
Bosold, Patrick		ML14002A008	803
Boudart, Jan		ML13330C033	245-21
Boudart, Jan		ML14007A009	861

Table D-3. Individuals Providing Unique Comments on the Draft GEIS and Proposed Rule (cont'd)

Commenter	Affiliation (if stated)	ADAMS Accession #	Correspondence ID
Bourgeois, Paula		ML13352A525	486
Boyd, David	Nuclear Waste Strategy Coalition	ML13360A277	689
Boyda, Jonathan		ML13339A171	346
Boyes, Pam		ML13310B069	112-35
Brack, H.G.		ML13354A019	554
Brancato, Deborah	Riverkeeper	ML13361A004	710
Branigan, Mary Beth	Ecological Options Network	ML13339A942	325-28
Brave, Jacqueline		ML13308C983	980
Brechin, Vernon		ML13357A807	610
Brefeld, James		ML14001A027	760
Bridgeman, Janis		ML13361A007	932
Bridges, Martha		ML13269A409	23
Brinton, Samuel		ML13310B069	112-26
Brinton, Samuel		ML14006A444	863
Britz, Joan		ML13358A412	645
Bromm, Susan E.	U.S. Environmental Protection Agency	ML14016A089	915
Brookhart, Ryan		ML13323B474	250-14
Broska, Robert		ML13355A008	589
Brotine, Howard		ML13365A343	731
Brousse, Elizabeth		ML13339A946	326-5
Brown, Deborah		ML13350A675	403
Brown, Jeffrey		ML13318A129	163-36
Brown, Jerry	World Business Academy	ML13353A029	501
Brown, Jerry	World Business Academy	ML13339A946	326-4
Brown, Marti		ML13339A946	326-14
Brown, Marty		ML13336A567	290
Brown, Steve		ML13351A311	444
Brown, Susan		ML13353A725	528
Brown, Tim	City of San Clemente, California	ML14029A015	315
Brunelli, Crystal		ML13302C613	972
Buchanan, Tom		ML13311A777	146
Buckingham, Jeffrey		ML13346A202	385
Bucklin, Christine		ML13352A488	474
Burchfield Rhodes, Valerie		ML14001A005	742

Table D-3. Individuals Providing Unique Comments on the Draft GEIS and Proposed Rule (cont'd)

Commenter	Affiliation (if stated)	ADAMS Accession #	Correspondence ID
Burkhead, Elizabeth		ML13351A500	457
Butler, Dee		ML13351A308	442
Butler, Ruth		ML13352A521	482
Byrne, Genevieve	Project for Energy Accountability and the Concerned Neighbors of Pilgrim	ML13310B069	112-13
Byrne, Peter		ML13339A946	326-46
Byrne, Timothy	United Association Plumbers and Pipefitters Local 51	ML13303B532	96
Cagnetta, Matt		ML13323B474	250-58
Caldicott, Helen	Physicians for Social Responsibility	ML13308C062	113
Callahan, Mike	Decommissioning Plant Coalition	ML13330B840	246-4
Callen, Ronald C.	Public Law Resource Center PLLC	ML13360A363	704
Calnan, Christopher		ML14001A021	755
Campbell, Bruce		ML14007A116	937
Campbell, Bruce		ML13339A946	326-63
Campbell, Mary		ML13269A413	26
Cannon, Tom	Arizona Public Service	ML13282A605	45-5
Capozzelli, J.		ML13304A019	91
Capurso, Thomas	I.B.E.W. Local Union #3	ML13312A356	153
Carberry, Mike	Sierra Club Nuclear-Free Campaign	ML13277A455	30-21
Carberry, Mike	Sierra Club Nuclear-Free Campaign	ML13345B014	329-18
Carberry, Mike	Sierra Club Nuclear-Free Campaign	ML13345B014	329-31
Carey, Corinne		ML14014A110	910
Carey, Corinne		ML13340A572	327-33
Carey, Kevin		ML14002A000	795
Carlton, Paul		ML14001A039	771
Carrigan, Milton		ML13339A946	326-19
Carter, Pat		ML13269A406	20
Cartmell, Cathy		ML13347A291	1003
Case, Ed		ML13339A165	340
Casebier, William		ML13358A135	621
Cash, Joy		ML13358A421	654
Casteleiro, Darcy		ML13318A129	163-13
Casten, Liane		ML13330C033	245-36
Cato, Michael		ML13358A364	634

Table D-3. Individuals Providing Unique Comments on the Draft GEIS and Proposed Rule (cont'd)

Commenter	Affiliation (if stated)	ADAMS Accession #	Correspondence ID
Caulfield, Lee		ML13303B525	95
Caulfield, Lee		ML13339A946	326-20
Causey, Lee		ML13323B474	250-43
Cavlan, Michael		ML13344B149	328-17
Cella, Dr. Francine		ML13330C033	245-41
Cerrito, Robert		ML13323C212	198
Chamberlain, Lora		ML13330C033	245-7
Chambers, Fred		ML13339A942	325-10
Chappellet, Carissa		ML14008A356	887
Chavez, Tim		ML13340A572	327-44
Chen, S.Y.		ML13330C033	245-5
Chichester, Ben		ML13310B069	112-34
Chin, Rebecca	Duxbury Nuclear Advisory Committee	ML13353A003	490
Chrisler, Gary		ML13298A192	68
Christie, Andrew	Santa Lucia Sierra Club	ML13357A820	614
Chunglo, Steve		ML13358A411	644
Church of New York, The Riverside		ML14017A121	918
Ciferri, Flavio		ML13355A006	587
Clark, Brita Larsen	PSR	ML14008A367	891
Clark, Terrence	Physicians for Social Responsibility	ML13351A141	417
Clark, Terrence	Physicians for Social Responsibility	ML13354A015	417
Clark, Terry	Physicians for Social Responsibility	ML13323B474	250-31
Claybourne, Ana		ML13353A726	529
Clemons, Victoria		ML13340A572	327-20
Clemons, Victoria		ML13351A014	421
Clendening, Tommie		ML13294A569	62
Clermont, Elaine		ML14006A443	838
Cleveland, Charles		ML13339A942	325-30
Clig, George		ML14027A588	947
Coalition, Clean and Safe Energy	Clean and Safe Energy Coalition	ML13323C007	213
Cobb, Sandra		ML13280A096	33
Cohen, Sam	Santa Ynes Band of Chumash Indians	ML13353A028	500
Cohn, Jeremy	Mitsubishi Nuclear Energy Systems	ML13277A455	30-19

Table D-3. Individuals Providing Unique Comments on the Draft GEIS and Proposed Rule (cont'd)

Commenter	Affiliation (if stated)	ADAMS Accession #	Correspondence ID
Colfi, Alessandra		ML14002A009	804
Collier, Grant		ML13336A723	295
Collins, Fred	Northern Chumash Tribal Council	ML13339A946	326-2
Collins, Jessie	Alliance to Halt Fermi 3	ML14014A092	904
Collins, Jessie Pauline		ML13339A174	349
Collins, Jessie Pauline		ML13340A572	327-5
Collins, Yoko		ML14006A378	831
Comer, Gail		ML13336A570	292
Commenters, Multiple[(a)]		ML13269A282	2
Commenters, Multiple[(a)]		ML13269A279	3
Commenters, Multiple[(a)]		ML13326B058	465
Commenters, Multiple[(a)]		ML13330A726	491
Commenters, Multiple[(a)]		ML14055A035	537
Commenters, Multiple[(a)]		ML13354C040	555
Commenters, Multiple[(a)]		ML14027A510	946
Commenters, Multiple[(a)]		ML14027A588	947
Commenters, Multiple[(a)]		ML14027A612	948
Commenters, Multiple[(a)]		ML14027A632	949
Commenters, Multiple[(a)]		ML14043A331	950
Commenters, Multiple[(a)]		ML14027A648	951
Conley, Pam		ML13359A008	671
Conley, Patrick		ML13304C148	974
Conn, Corey		ML13330C033	245-24
Conn, Diane		ML13339A946	326-21
Connor, Vicki		ML13339A946	326-49
Connoy, Gina		ML13355A002	583
Conrad, Chad		ML13355A011	592
Cook, Andrew		ML13323B474	250-35
Cook, Dr. Andrew G.		ML13308D096	138
Cooper, Elaine	South Carolina Sierra Club	ML13323B474	250-20
Cooper, Mark		ML14030A152	900
Coor, Kristen		ML13351A142	435
Corbett, Susan		ML13323B474	250-7
Cordes, Reo		ML13339A946	326-59
Corrino, G		ML14006A448	841

Table D-3. Individuals Providing Unique Comments on the Draft GEIS and Proposed Rule (cont'd)

Commenter	Affiliation (if stated)	ADAMS Accession #	Correspondence ID
Costanza, Frank		ML13330C033	245-50
Cox, Bruce		ML13308C638	130
Cox, David		ML13346A218	388
Craig, Anne		ML13270A457	28
Craig, Anne		ML13319B252	177
Craig, Evan		ML13330C033	245-46
Craig, Tom		ML13273A496	29
Crimmel, Steve		ML13339A946	326-54
Crocker, George	North American Water Office	ML13357A804	608
Crocker, George	North American Water Office	ML13344B149	328-7
Crow, Valerie		ML13340A572	327-25
Crowley, Lawrence		ML13358A417	650
Cullen, Noreen		ML13325A001	237
Cummings, Kristopher		ML13344B149	328-8
Cunningham, William and Barbara		ML13308C635	129
Curran, Diane	Harmon, Curran Spielberg & Eisenberg, LLP; For the Office of	ML14030A152	897
Curran, Diane	Harmon, Curran Spielberg & Eisenberg, LLP; For the Office of	ML14030A152	898
Curran, Diane	Harmon, Curran Spielberg & Eisenberg, LLP; For the Office of	ML14030A152	952
Curran, Diane	Harmon, Curran Spielberg & Eisenberg, LLP; For the Office of	ML14030A152	953
Curran, Diane	Harmon, Curran Spielberg & Eisenberg, LLP; For the Office of	ML14030A152	954
Curran, Diane	Harmon, Curran, Spielberg & Eisenberg, LLP	ML14030A152	899
Curran, Diane	Harmon, Curran, Spielberg & Eisenberg, LLP	ML14030A152	900
Curran, Diane	Harmon, Curran, Spielberg & Eisenberg, LLP	ML14030A152	916
Curren, Elizabeth		ML13336A565	289
Curtin, Kenneth	Clean and Safe Energy Coalition	ML13277A455	30-18
Curtis, Daniel		ML13310B069	112-27
Curtis, Daniel		ML14006A444	863
Cuthbert, Donna	The Alliance for a Clean Environment	ML13345B014	329-26

Table D-3. Individuals Providing Unique Comments on the Draft GEIS and Proposed Rule (cont'd)

Commenter	Affiliation (if stated)	ADAMS Accession #	Correspondence ID
Cuthbert, Lewis	The Alliance for a Clean Environment	ML13345B278	377
Cuthbert, Lewis	The Alliance for a Clean Environment	ML13345B014	329-3
Cypser, Betty		ML13308D082	135
Cypser, Betty		ML13308D087	137
Cypser, Betty	Raging Grannies	ML13318A129	163-28
D'Arrigo, Diane	Nuclear Information Resource Service	ML13277A455	30-8
D'Arrigo, Diane	Nuclear Information Resource Service	ML13330B840	246-2
Dailey, Arthur		ML13320A014	199
Daily, G. Allen		ML13339A916	357
Dalton, Andrew		ML13318A129	163-43
Daly, John		ML13268A330	8
Damratoski, Katie	North American Young Generation in Nuclear	ML13353A736	535
Daniels, John		ML13319B254	178
Darling, Ann	Safe and Green Campaign	ML13310B069	112-24
Davidson, Judith		ML13280A845	48
Davies, Phyllis		ML13339A946	326-22
Davis, Adrianne		ML13339A946	326-58
Davis, Anonymous		ML14006A441	836
Davis, Cherie		ML14007A004	843
Davis, Ed	Nuclear Infrastructure Council	ML13360A116	685
Davis, Leslie	Earth Protector Environmental Group	ML13344B149	328-15
Davis, Patti		ML13339A942	325-27
Davis, Shelle		ML13298B092	83
Davis, Suzanne		ML13353A006	493
Davis, Tom		ML13353A006	493
Davison, David		ML13351A011	418
Davison, Heidi		ML13298B225	85
de Graaf, Brandon		ML13330C033	245-12
De Lacey, Carol		ML14001A052	780
Dean, Janice	New York State Attorney General's Environmental Protection Bureau	ML13365A345	473
deBruler, Gregory		ML14002A003	798
DeCrescenzo, Jackie		ML13318A129	163-50
DeCrescenzo, Jocelyn		ML13350A651	395

Table D-3. Individuals Providing Unique Comments on the Draft GEIS and Proposed Rule (cont'd)

Commenter	Affiliation (if stated)	ADAMS Accession #	Correspondence ID
DeCrescenzo, Jocelyn		ML13318A129	163-51
Degher, Darius		ML13324B143	220
DeLano, Harry		ML14001A012	748
DeMare, Joseph		ML13340A572	327-29
Dengler, Allegra	Sierra Club	ML13318A129	163-40
Denneen, Bill		ML13329A680	254
Denneen, Bill		ML13345A063	365
Denneen, Bill		ML14008A351	871
Dennis, Harold E.B.		ML13302C184	93
Denton, Jill		ML13320A022	207
Deshotels, Bob		ML13323C009	214
Deshotels, Bob		ML13324B619	231
Deshotels, Bob		ML13339A942	325-6
Devitt, Andrea		ML14001A019	753
Devitt, Andrea		ML13339A946	326-27
DeVoe, Joe		ML13323B474	250-67
Dew, Jane		ML14001A058	786
Diaconeasa, Mihai		ML13310B069	112-28
Diamond, Jim		ML13351A200	1007
Diem, Larkin		ML13319B260	184
Diem, Larkin		ML13323B474	250-47
Dimondstein, Carla		ML13351A185	1004
Doctor, Appalled		ML13324B148	223
Dolegowski, John		ML13358A351	632
Dolph, Ivar		ML13281A074	49
Dolph, Phyllis		ML13281A074	49
Donaldson, John		ML13323A701	996
Donnelly, Dennis		ML13336B459	316
Dorans, Rob	Affiliated Construction Trades Foundation of Ohio	ML13340A572	327-31
Dorsey, Chris		ML13345B014	329-1
Doyle, Rosemary		ML13320A007	193
Doyle, Rosemary		ML14008A159	940
Drey, Kay		ML13361A012	715
Drotar, Laura		ML13319A938	172

Table D-3. Individuals Providing Unique Comments on the Draft GEIS and Proposed Rule (cont'd)

Commenter	Affiliation (if stated)	ADAMS Accession #	Correspondence ID
Dubois, Gwen L	Chesapeake Physicians for Social Responsibility; Crabshell Alliance	ML13330B840	246-11
Dubois, Gwen L	Chesapeake Physicians for Social Responsibility; Crabshell Alliance	ML13324B621	233
Dudley, Chris		ML13351A015	422
Dugan, Pat		ML13350A678	405
Dugdale, Jane		ML13329A674	249
Dugdale, Jane		ML13330B840	246-17
Duke, George		ML13353A633	575
Duke, Paul	PSEG Nuclear LLC	ML13358A414	647
Duke, Paul	PSEG Nuclear LLC	ML14001A007	647
Dunlap, Jeff	Exelon	ML13330C033	245-20
Dupiche, Sharon		ML13304C031	99
Dupont, Alice		ML14001A041	773
Earl, David		ML14001A056	784
Eckert, Rose		ML13324B617	229
Eder, Harvey	Public Solar Power Coalition	ML14001A010	746
Edwards, Gordon	Canadian Coalition for Nuclear Responsibility	ML13361A010	714
Edwards, Greg		ML13302C185	94
Ehrle, Lynn Howard	International Science Oversight Board	ML13308C062	113
Ehrlich, Jeremy		ML13338A734	335
Eide-Tollefson, Kristen		ML13344B149	328-12
Eide-Tollefson, Kristen	PINGP Study Group	ML14002A040	820
Ein, Mark		ML14007A030	852
Einhorn, Jeremy		ML13320A006	192
Eisman, Val		ML13360A279	690
Elie, Marilyn		ML13318A129	163-21
Ellison, David		ML14008A435	878
Ellison, David		ML13340A572	327-14
Embrey, Monica		ML13323B474	250-28
Emerson, Willis		ML13298A768	80
Emmons, Roger		ML13346A214	387
Endo, Yuki		ML13308C071	114
Endo, Yuki		ML13318A129	163-27
English, Becky	Sierra Club, Rocky Mtn. Chapter	ML13282A605	45-1

Table D-3. Individuals Providing Unique Comments on the Draft GEIS and Proposed Rule (cont'd)

Commenter	Affiliation (if stated)	ADAMS Accession #	Correspondence ID
Enriquez, Elizabeth	Nye County, Nevada	ML13354A007	544
Epple, Melissa		ML13322B769	995
Evans, Laurie	Westchester Safe	ML13318A129	163-49
Evans, Michael W.		ML14027A588	947
Evans, Pete		ML13339A946	326-50
Evjion, Virginia		ML13316C349	159
Fabihn, Dagmar	Crabshell Alliance of Greater Baltimore, Maryland	ML13330B840	246-30
Fahey, John		ML13353A476	514
Falis, Edward		ML13301B123	969
Fallon, Gloria		ML13311A781	147
Farbish, Peter		ML13355A015	595
Faris, Kelly		ML13340A572	327-42
Fast, Wendy		ML13296A228	55
Fast, Wendy		ML13302A854	88
Fast, Wendy		ML13360A298	695
Fasten, Susan		ML13345B284	381
Fasten, Susan		ML13351A312	445
Fasten, Susan		ML13358A388	641
Fasten, Susan		ML14014A087	902
Fasten, Susan		ML14014A089	903
Faunce, Stephanie		ML14027A588	947
Feathers, Jösan		ML13351A494	453
Feathers, Jösan		ML13339A942	325-29
Felder, H.M.		ML13308C640	131
Feldman, Jane	Sierra Club (Toiyabe Chapter)	ML13345B014	329-33
Ferguson, Tom		ML13324B144	221
Ferreira, Raul		ML14027A588	947
Fettus, Geoffrey	Natural Resources Defense Council, Inc.	ML13360A365	706
Fettus, Geoffrey	Natural Resources Defense Council, Inc.	ML14030A152	954
Fisher, Allison		ML14014A312	912
Fisher, Allison	Public Citizen's Energy Program	ML13330B840	246-22
Fisher, Peter		ML13354B902	572
Fishman, Zelma		ML13336A726	297

Table D-3. Individuals Providing Unique Comments on the Draft GEIS and Proposed Rule (cont'd)

Commenter	Affiliation (if stated)	ADAMS Accession #	Correspondence ID
Fitch-Johnson, Janet		ML13353A031	503
Fleischer, Robert		ML13310B069	112-32
Fleming, Scott		ML13336A373	278
Fleming, Scott	Will County Center for Economic Development	ML13330C033	245-4
Foley, Nancy		ML14002A021	814
Follett, Carol		ML13268A325	11
Ford, Jay		ML13324B623	235
Fosmo, Vaugh		ML13339A946	326-52
Foster, Ruth	New Jersey Department of Environmental Protection	ML14015A566	920
Foster, William		ML14027A588	947
Foushee, Lea		ML13344B149	328-6
Fox, Patsy		ML13304C030	111
Fox, Rick	Global Warming Solutions Group of Central Illinois	ML13330C033	245-8
Fox, Tracy		ML13330C033	245-31
Fradella, Richard		ML13352A478	471
Frances, Esther		ML13351A490	452
Frank, Fred		ML13329A682	255
Frank, Fred		ML13339A946	326-28
Frankland, Chris	ConverDyn	ML13282A605	45-14
Frantz, Charles		ML13280A756	961
Fray, Joseph		ML13340A436	360
Freeman, S. David	Consultant	ML13308C062	113
Freeman, Susan		ML14001A030	763
Fregonese, Vic		ML13323B474	250-62
Fregonese, Vic	AREVA	ML13320A016	201
French, Walter	Plumbers, Pipe and Refrigeration Fitters Local Union No. 403	ML13346A189	574
Freund, Tim		ML13280A444	51
Frey, Paul		ML13345A069	366
Friedman, Avram	Canary Coalition	ML13320A001	187
Friedman, Avram	Canary Coalition	ML13323B474	250-33
Fritz, John		ML14007A035	856
Fry, Mark		ML13318A129	163-42

Table D-3. Individuals Providing Unique Comments on the Draft GEIS and Proposed Rule (cont'd)

Commenter	Affiliation (if stated)	ADAMS Accession #	Correspondence ID
Fuentes, Julio	Florida State Hispanic Chamber of Commerce	ML13336B028	307
Fullerton, Dan		ML13318A129	163-23
Fulton, Doris		ML13280A098	35
G, Ambriel		ML13304C026	108
G., Brittany		ML13319A942	173
Gale, Maradel		ML13329A948	269
Gale, Robert and Beverly		ML13311A789	151
Gall, Gary		ML13329A942	265
Gallagher, Dr. Terry		ML13330C033	245-44
Gamble, Dan	INviro Design and Consulting, LLC	ML13365A334	724
Gantt, Carol		ML13323B474	250-49
Garb, James		ML13324B618	230
Garcia, Diego		ML13310B069	112-12
Garcia, Diego		ML13330B840	246-21
Garden, Claire		ML13324B152	226
Garner-Ritter, Maureen		ML13318A129	163-15
Garvey, Lydia		ML13352A522	483
Garza, John	SCE&G – V.C. Summer Nuclear Station	ML13357A319	606
Geary, B.		ML13358A387	640
Geesman, John	Alliance for Nuclear Responsibility	ML13339A946	326-7
Geist, Sheila		ML13350A650	476
Geist, Sheila	Shut Down Indian Point Now	ML13318A129	163-33
Gellert, Sally Jane		ML13318A129	163-20
Gellert, Sally Jane		ML14006A386	864
Georgi, Carol	California Central Coast Marine Sanctuary Alliance	ML13360A102	678
Georgi, David		ML13345A073	369
Gerard, Daniele	Three Parks Independent Democrats	ML13318A129	163-9
Gerhart, Dan		ML13354B906	573
Gerleman, Doug		ML13330B840	246-27
Gerleman, Douglas		ML13350A679	406
Gerstein, Bill		ML13320A008	194
Gibson, Bruce	San Luis Obispo County California	ML13354A013	548
Gibson, Julie		ML14007A008	845

Table D-3. Individuals Providing Unique Comments on the Draft GEIS and Proposed Rule (cont'd)

Commenter	Affiliation (if stated)	ADAMS Accession #	Correspondence ID
Giese, Mark M.		ML13353A439	507
Giese, Mark M.		ML13353A000	487
Giese, Mark M.		ML14001A004	741
Gill, Susan		ML13352A470	468
Gilmore, Donna		ML13339A942	325-2
Gilmore, Donna		ML14001A022	756
Gilmore, Donna	Coalition to Decommission San Onofre	ML14001A031	764
Ginsberg, Ellen	Nuclear Energy Institute	ML13277A455	30-3
Ginsberg, Ellen	Nuclear Energy Institute	ML13310B069	112-19
Ginsberg, Ellen	Nuclear Energy Institute	ML13318A129	163-30
Ginsberg, Ellen	Nuclear Energy Institute	ML13330B840	246-14
Ginsberg, Ellen	Nuclear Energy Institute	ML14001A002	827
Giunta, Tony	City of Franklin, NH	ML13310B069	112-1
Glass, Peter	Xcel Energy	ML13358A385	638
Glime, Janice		ML13298B503	964
Gloege, William		ML13339A946	326-24
Golden, Leon		ML13329A676	252
Goldin, Martha		ML13329A676	252
Goldstein, Mindy	Turner Environmental Law Clinic	ML14030A152	897
Goldstein, Mindy	Turner Environmental Law Clinic	ML14030A152	952
Goley, Timothy		ML13336A722	294
Good, Joyce		ML13330C033	245-38
Goodwin, Liberty		ML13331C303	997
Gordon, Mark		ML13359A005	668
Gordon, Michelle		ML13359A005	668
Gordon, Michelle		ML14001A003	740
Goudeau, Terry		ML13344A757	1001
Grace, Karli		ML13330C033	245-47
Graham, Candace		ML13352A490	475
Graham, Susan		ML13319B255	179
Grannies, Raging		ML14037A420	959
Graves, Caryn		ML13351A016	423
Gray, Erica		ML13277A455	30-15
Gray, Erica		ML13330B840	246-3

Table D-3. Individuals Providing Unique Comments on the Draft GEIS and Proposed Rule (cont'd)

Commenter	Affiliation (if stated)	ADAMS Accession #	Correspondence ID
Gray, Erica		ML13345B014	329-17
Gray, Erica		ML13345B014	329-35
Gray, Erica		ML14006A385	865
Gray, Susan	Maryland Department of Natural Resources	ML13345B014	329-35
Green, Carlyn		ML13319B259	183
Green, Jeane		ML13365A344	732
Green, Jeanne		ML13336B032	309
Green, Michael	Arizona Public Service Company	ML13282A605	45-2
Greene, David		ML13325A003	238
Greene, Linda		ML13275A665	31
Greenfield, Jan		ML13340A437	361
Greenwood, John		ML13340A572	327-28
Greisch, Edward		ML13268A332	16
Greisch, Edward		ML13269A415	17
Griffin, William	Office of the Attorney General, State of Vermont	ML13365A345	473
Griffin, William	Office of the Attorney General, State of Vermont	ML13149A446	1
Griffin, William	Office of the Attorney General, State of Vermont	ML14006A368	867
Grigg, Richard		ML13353A008	495
Grodzinsky, D.M.	Presidium of the National Academy of Science of Ukraine	ML13308C062	113
Groff, Inga		ML13280A452	41
Groff, Joe		ML13280A452	41
Groot, Henriette		ML13339A946	326-29
Gross, Cheryl		ML13350A674	402
Guido, Jeffry	Maryland State Pipe Trades Association	ML13277A455	30-9
Guindon, Ernest		ML13340A572	327-45
Gunderson, Arnie	Fairewinds	ML13308C062	113
Gunn, George	Vogtle Units 1 and 2	ML13323B474	250-21
Gunter, Keith	Alliance to Halt Fermi 3	ML14002A022	815
Gunter, Keith	Alliance to Halt Fermi 3	ML13340A572	327-7
Gunter, Paul	Beyond Nuclear	ML13360A282	691

Table D-3. Individuals Providing Unique Comments on the Draft GEIS and Proposed Rule (cont'd)

Commenter	Affiliation (if stated)	ADAMS Accession #	Correspondence ID
Gupton, William		ML13323B474	250-64
Gutherman, Brian		ML13318A129	163-11
Gutierrez, Ruth		ML13329A941	264
Guttierez, Ingrid		ML13339A946	326-51
Haber, Jim		ML13336A381	282
Hafemeister, David		ML13339A946	326-30
Hafer, Sarah		ML14027A588	947
Haggerty, Bernard		ML13296A084	955
Haggerty, Bernard		ML13282A605	45-3
Hall, Caroline		ML13324B620	232
Hall, Christoper		ML13298B564	965
Hamilton, Richard		ML13353A639	523
Hancock, Mandy		ML13330B643	244-3
Hancock, Mandy	Southern Alliance for Clean Energy	ML13330B643	244-3
Handelsman, Robert		ML13268A102	19
Hands, Tara		ML13323B474	250-22
Hanna, Helen		ML14002A001	796
Hannaman, Bill		ML13336A551	286
Hannaman, Bill		ML13339A942	325-26
Hanrahan, Carol		ML13323B474	250-48
Hanson, Courtney	Alliance for Nuclear Accountability	ML13358A413	646
Hanson, Courtney	Georgia Women's Action for New Directions	ML13323B474	250-66
Hanson, Lauren		ML13351A005	409
Harkins, Lynne		ML13329A683	256
Harlan, Thomas	City of Red Wing, Minnesota	ML14001A055	783
Harris, Kate		ML14001A034	767
Hatfield, Barry		ML13280A095	32
Haughney, Charles		ML14007A038	859
Hayati, Sally		ML13336A730	301
Headington, Maureen		ML13365A332	722
Headington, Maureen		ML13330C033	245-6
Headington, Maureen	Stand Up/Save Lives Campaign	ML13277A455	30-22
Headington, Vince		ML13365A331	721
Headington, Vince		ML13330C033	245-22

Table D-3. Individuals Providing Unique Comments on the Draft GEIS and Proposed Rule (cont'd)

Commenter	Affiliation (if stated)	ADAMS Accession #	Correspondence ID
Headrick, Gary		ML13358A427	660
Headrick, Gary	San Clemente Green	ML13353A091	957
Headrick, Gary	San Clemente Green	ML13339A942	325-1
Headrick, Gary	San Clemente Green	ML14007A014	860
Heald, Deborah		ML13339A169	344
Hedlund, Robert L.	Massachusetts Senate	ML14015A365	943
Heinle, Helen		ML13316C332	156
Helker, David P.	Exelon Generation Company, LLC	ML14008A173	942
Hellwig, Louis		ML13280A453	42
Helsel, Adam		ML13350A655	398
Hennen, Jimmy	North American Young Generation in Nuclear	ML13323B474	250-54
Hennessy, Diane		ML14002A002	797
Hennig, Anna Christina		ML13298B624	84
Henning, Marcia		ML13320A416	993
Henry, Anita		ML13339A946	326-61
Herwig, Bill	V.C. Summer Nuclear Station	ML13323B474	250-13
Hibbard, Angela		ML13350A677	719
Higgins, Kevin		ML13352A517	478
Highfill, Debbie		ML13339A946	326-31
Hill, Adam	San Luis Obispo County Board of Supervisors	ML13339A946	326-1
Hill, Barbara		ML13298A762	75
Hill, Jack		ML13320A017	202
Hiller, Stephanie		ML13351A022	429
Hinch, Richard		ML13301A866	87
Hirsch, Daniel	Physicians for Social Responsibility-LA, Southern CA Fed. of Scientists; Committee to Bridge the Gap	ML13365A335	738
Hirsch, Daniel	Physicians for Social Responsibility-LA, Southern CA Fed. of Scientists; Committee to Bridge the Gap	ML14006A382	738
Hisasue, Carole		ML13365A347	734
Hisasue, Carole		ML13365A348	734
Hoch, Susan		ML13324B615	243
Hodik, Barbara J.		ML13308D098	139

Table D-3. Individuals Providing Unique Comments on the Draft GEIS and Proposed Rule (cont'd)

Commenter	Affiliation (if stated)	ADAMS Accession #	Correspondence ID
Hoffman, Ace		ML13268A430	561
Hoffman, Ace		ML13354B054	562
Hoffman, Ace		ML13357A822	616
Hoffman, Ace		ML13277A455	30-4
Hoffman, Ace		ML13330B840	246-29
Hoffman, Ace		ML13339A942	325-7
Hoffman, Ace		ML13345B014	329-16
Hoffman, David		ML13350A672	401
Hoisington, Paula		ML13351A499	456
Hollingsworth, Timothy		ML13339A946	326-42
Holloway, Patricia		ML14007A033	855
Holmes, Helen		ML13353A449	510
Holt, Cathy		ML13296A257	66
Holt, Joan		ML13345B283	380
Homick, Nick		ML14008A189	869
Homick, Nick		ML13339A946	326-56
Horne, Shari		ML14001A013	749
Houston, Ann E.		ML13308C612	126
Howard, Claude		ML13323B474	250-38
Howard, Gordon		ML13353A032	504
Howarth, Robert		ML13320A002	188
Howarth, Robert		ML13323B474	250-12
Howell, Adam		ML13323B474	250-19
Hughes, Kevin		ML13320A025	209
Hulstrunk, Matt		ML13354B893	569
Hunt, Le		ML13301A125	966
Husch, Ben	National Conference of State Legislators	ML13330B840	246-1
Hynes, H Patricia		ML13352A468	467
Imhoof, Christina		ML13358A416	649
Ingram, Gwen		ML14002A051	824
Iwane, Cathy		ML13339A942	325-21
Iwashita, Thomas		ML14001A059	787
Izant, Carol	Alliance to Halt Fermi 3	ML14002A022	815
Izant, Carol	Alliance to Halt Fermi 3	ML13340A572	327-39

Table D-3. Individuals Providing Unique Comments on the Draft GEIS and Proposed Rule (cont'd)

Commenter	Affiliation (if stated)	ADAMS Accession #	Correspondence ID
Jackson, Bruce		ML13298A760	73
Jackson, Carol		ML13353A735	536
Jacobs, Kamri		ML13319A922	168
Jacobson, Janet		ML13353A642	525
Jacopetti, Anna		ML13298A391	963
Jaffee, Ellen	97th Assembly District	ML13318A129	163-13
James, Andrew		ML13323B474	250-70
Jamil, Dhiaa	Duke Energy	ML13359A009	672
Jennings, Stephanie		ML13358A425	658
Jensen, Phyllis		ML13298A763	76
Johanson, Birgit		ML13310B069	112-31
Johnson, Abigail	Eureka County, Nevada	ML13351A528	459
Johnson, Amber		ML14014A108	909
Johnson, Arlene		ML13338A737	338
Johnson, Bobie		ML13304B963	973
Johnson, Joe		ML13355A007	588
Johnson, Madeleine		ML13336B048	311
Johnson, Ray		ML13354A022	557
Johnson, Reed		ML13338A736	337
Johnson, Reed		ML14001A053	781
Johnson, Roger		ML13357A832	618
Johnson, Roger		ML14001A033	618
Johnson, Roger		ML13339A942	325-31
Johnson, Ron	Prairie Island Indian Community	ML13344B149	328-1
Johnson, Troy		ML14006A365	828
Johnston, Christined		ML13365A350	736
Johnston, Gretel	BEST/MATRR	ML13345B014	329-13
Johnston, Josiah		ML13308C646	134
Jones, Angela		ML14002A012	806
Jones, Lauren	North American Young Generation in Nuclear	ML13323B474	250-57
Jones, Mary		ML13351A005	409
Joslyn, Celia		ML13352A472	469
Jouet, Lisa		ML13329A949	270
Jouet, Tim		ML13329A949	270

Table D-3. Individuals Providing Unique Comments on the Draft GEIS and Proposed Rule (cont'd)

Commenter	Affiliation (if stated)	ADAMS Accession #	Correspondence ID
Judson, Tim	Nuclear Information and Resource Service	ML13277A455	30-17
Justesen, Evelyn		ML13354A004	541
Kalama, Laura		ML14027A588	947
Kalas, Mike		ML13330C033	245-52
Kamps, Kevin		ML13277A455	30-2
Kamps, Kevin		ML13330B840	246-32
Kamps, Kevin		ML13330C033	245-13
Kamps, Kevin		ML13340A572	327-10
Kamps, Kevin		ML13345B014	329-11
Kamps, Kevin		ML13345B014	329-20
Kamps, Kevin	Beyond Nuclear	ML13360A356	698
Kamps, Kevin	Beyond Nuclear	ML14017A423	919
Kamps, Kevin	Beyond Nuclear	ML14021A053	921
Kamps, Kevin	Beyond Nuclear	ML14021A054	922
Kamps, Kevin	Beyond Nuclear	ML14021A056	923
Kamps, Kevin	Beyond Nuclear	ML14021A060	924
Kamps, Kevin	Beyond Nuclear	ML14021A065	925
Kamps, Kevin	Beyond Nuclear	ML14021A068	926
Kamps, Kevin	Beyond Nuclear	ML14021A071	927
Kamps, Kevin	Beyond Nuclear	ML14021A074	928
Kamps, Kevin	Beyond Nuclear	ML14021A075	929
Kane, Lynne		ML13301A327	967
Kansas, Sharon		ML13317A192	987
Karas, Catherine		ML13352A524	485
Karbowsky, Brad	United Association of Plumbers, Steamfitters, and Sprinklerfitters	ML13330B840	246-18
Karson, Ann		ML13308C642	132
Kasher, Brian		ML13323B474	250-63
Kates, Daisy		ML13276A768	960
Katz, Shari		ML13329A687	259
Kaul, Michelle		ML13354A001	538
Keegan, Michael		ML13340A572	327-2
Keegan, Michael J.	Coalition for a Nuclear Free Great Lakes	ML13361A009	713
Keegan, Michael J.	Coalition for a Nuclear Free Great	ML14022A282	945

Table D-3. Individuals Providing Unique Comments on the Draft GEIS and Proposed Rule (cont'd)

Commenter	Affiliation (if stated)	ADAMS Accession #	Correspondence ID
	Lakes		
Kelley, Devin	AREVA Inc.	ML14001A009	745
Kelley, Don		ML13280A830	46
Kelly, Dan		ML13268A321	4
Kemp, James		ML13276A237	15
Kemp, Karla		ML14006A446	839
Kennedy, David		ML13336B467	320
Kernahan, Gary		ML13339A942	325-24
Kernahan, Mel		ML13336A548	285
Kernahan, Mel		ML13339A942	325-23
Kerr, Beverly		ML13323B474	250-40
Kerr, Julius		ML13323B474	250-11
Kerr, Mary Ellen		ML13351A003	407
Keskey, Donald L.	Public Law Resource Center PLLC	ML13360A363	704
Kessler, John	Electric Power Research Institute	ML13345B282	379
Kidney, Barbara A.		ML13308C609	125
Kidney, Barbara A.		ML13318A129	163-41
Killpack, Gary		ML13351A192	1006
Kimmich, Erl	Three Parks Independent Democrats	ML13318A129	163-10
Kinnaird, Eleanor		ML13351A303	437
Kinnicle, Kat		ML13319A933	171
Kinsella, William		ML13360A115	684
Kinsey, Bob		ML13282A605	45-12
Kinzinger, Adam	16th District of Illinois	ML13336A364	273
Kirkland, Gary L.		ML13346A233	390
Kirsch, Steve	OneID	ML13336B021	306
Kirschbaum, Saran		ML13339B033	999
Kirton, Kenneth	CASEnergy Coalition	ML13294A568	61
Kirton, Stratton	CASEnergy Coalition	ML13310B069	112-4
Kirton, Stratton	CASEnergy Coalition	ML13339A942	325-5
Kirton, Stratton	CASEnergy Coalition	ML13339A946	326-16
Klein, George	Sierra Club Lower Hudson Group	ML13318A129	163-45
Klepner, Lou		ML13339A913	356
Kline, Connie		ML14001A017	819
Kline, Connie		ML14001A018	819

Table D-3. Individuals Providing Unique Comments on the Draft GEIS and Proposed Rule (cont'd)

Commenter	Affiliation (if stated)	ADAMS Accession #	Correspondence ID
Kline, Connie		ML13340A572	327-11
Klutho, Mark		ML13330B643	244-5
Kneidel, Ken		ML13323B474	250-17
Kneidel, Sally		ML13319B261	185
Kneidel, Sally		ML13323B474	250-16
Knisley, Mike	Ohio State Donating Construction Trades Council	ML13340A572	327-12
Knowles, Berdell	Florida Chapter of the American Association of Blacks in Energy	ML13330B643	244-2
Koehl, Dennis L.	STP Nuclear Operating Company	ML14015A079	914
Koehnlein, Wolfgang		ML13308C062	113
Koerblein, Alfred		ML13308C062	113
Korn, Susan		ML13330C033	245-23
Korsen, Alan		ML14001A057	785
Korsen, G		ML14006A442	837
Kotra, Janet		ML13277A455	30-1
Kotra, Janet		ML13353A729	532
Kovacs, Ashley		ML13330C033	245-26
Kraft, Dave	NEIS	ML13361A013	716
Kraft, David	NEIS	ML13336A366	274
Kraft, David	NEIS	ML13330C033	245-3
Kraskian, Jessica		ML13358A420	653
Krause, Laurel		ML13351A313	446
Kremer, Jerry	New York Affordable Reliable Electricity Alliance	ML13318A129	163-19
Krimsky, Pam		ML14002A013	807
Krist, Mark		ML13339A946	326-55
Krotz, Susan		ML13323B474	250-59
Krumm, Paul		ML13351A007	411
Kuchnia, Margaret		ML14001A025	758
Kuntawala, Jitesh		ML13330B643	244-7
Kurland, Miriam		ML13296A217	54
Kurz, Carol		ML13336A370	276
Kurz, Carol		ML13330C033	245-14
Kurz, Carol		ML13358A353	633
Kushigian, Elizabeth		ML13340A434	359

Table D-3. Individuals Providing Unique Comments on the Draft GEIS and Proposed Rule (cont'd)

Commenter	Affiliation (if stated)	ADAMS Accession #	Correspondence ID
Kutcher, Celia		ML13329A943	266
Kuttler, Eugeni		ML14001A045	776
Kuyler, Raphael	Counsel for Entergy Nuclear Operatinos, Inc	ML13360A316	697
Kysor, Jillian	Blue Ridge Environmental Defense League	ML13354A016	551
Kysor, Jillian	Blue Ridge Environmental Defense League	ML14030A152	897
Labiosa, Eleanor		ML13324B614	242
LaForge, John		ML13344B149	328-9
Laing, Josephine		ML13351A137	415
Lamb, Charles		ML13351A304	438
Lamberger, Paul		ML13340A572	327-36
Lamberts, Frances		ML13336A738	303
Lamberts, Frances		ML14008A373	892
Lamont, Dana		ML13294A037	57
Lampert, Jim		ML13310B069	112-2
Lampert, Mary	Pilgrim Watch	ML13354A021	556
Lampert, Mary	Pilgrim Watch	ML14001A038	556
Lampert, Mary	Pilgrim Watch	ML13310B069	112-3
Landers, Don		ML13345B259	374
Landgren, Nancy		ML14008A149	342
Landreth, Will		ML13339A946	326-32
Laney, Nan S.		ML14002A014	936
Lang, Amanda		ML13323B474	250-18
Lang, Amanda		ML13359A011	674
Lange, Howard		ML13355A010	591
Lapiska, Evan	Clean and Safe Energy Coalition	ML13294A564	60
Lapiska, Evan	Clean and Safe Energy Coalition	ML13323C000	212
Lapiska, Evan	Clean and Safe Energy Coalition	ML13277A455	30-20
Lapiska, Evan	Clean and Safe Energy Coalition	ML13318A129	163-18
Lapiska, Evan	Clean and Safe Energy Coalition	ML13330B840	246-20
Large, Gerry		ML13358A143	624
Larsen Clark, Brita		ML13323B474	250-53
Larson, Jean		ML13323B474	250-44
Laverty, Michael		ML13320A235	991

Table D-3. Individuals Providing Unique Comments on the Draft GEIS and Proposed Rule (cont'd)

Commenter	Affiliation (if stated)	ADAMS Accession #	Correspondence ID
Lawhorn, Larry		ML13365A342	730
LeCour, Melinda		ML13298A764	77
Lee, Catherine		ML13308C622	127
Lee, Denise		ML13323B474	250-60
Lee, Michel		ML13360A357	699
Lee, Michelle		ML13318A129	163-12
Lehman, Dale		ML13330C033	245-25
Leichtling, Don		ML13323B992	211
Leichtling, Don		ML13330B840	246-5
Leighton, Taigen		ML13329B080	272
Leiter, Susan	Sierra Club; Stoney Point 55	ML13318A129	163-46
Lemmon, Tom		ML13339A942	325-18
Leon, Vicki		ML13357A806	609
Leonardi, Michael		ML13340A572	327-6
Leontis, Neocles		ML13340A572	327-37
Levine, Jeff		ML13308D270	981
Levine, JR		ML13338A513	1009
Lewis, Carol		ML13301A857	86
Lewis, Dave		ML13280A454	43
Lewis, Marvin		ML13345B267	376
Lewis, Marvin		ML13345B280	378
Lewis, Marvin		ML13351A020	427
Lewis, Marvin		ML13351A023	430
Lewis, Marvin		ML13351A498	455
Lewis, Marvin		ML13353A030	502
Lewis, Marvin		ML13353A104	958
Lewis, Marvin		ML13357A821	615
Lewis, Marvin		ML14015A084	906
Lewis, Marvin		ML13277A455	30-14
Lewis, Marvin		ML13330B840	246-6
Lewis, Marvin		ML14001A048	818
Lewis, Sherry	Mothers for Peace	ML13336A571	293
Lewis, Sherry	Mothers for Peace	ML13339A946	326-44
Lewison, Linda	Sierra Club Nuclear Free Campaign	ML13361A002	708
Lewison, Linda	Sierra Club Nuclear Free Campaign	ML13361A015	717

Table D-3. Individuals Providing Unique Comments on the Draft GEIS and Proposed Rule (cont'd)

Commenter	Affiliation (if stated)	ADAMS Accession #	Correspondence ID
Lewison, Linda	Sierra Club Nuclear Free Campaign	ML13361A016	934
Lewison, Linda	Sierra Club Nuclear Free Campaign	ML13330B840	246-9
Lewison, Linda	Sierra Club Nuclear Free Campaign	ML13330C033	245-10
Lewison, Linda	Sierra Club Nuclear Free Campaign	ML13345B014	329-23
Leyse, Mark		ML13330B840	246-28
Leyse, Mark	Atomic Safety Organization	ML13351A310	463
Lieberman, Bruce		ML14006A438	833
Light, Lillian	Environmental Priorities Network	ML13336A732	302
Lind, Jeff	S. Lombardi and Associates	ML14009A005	886
Lish, Christopher		ML13338A735	336
Little, Jim	Carolinas Nuclear Cluster	ML13323B474	250-61
Littlejohn, Nick		ML13280A449	39
Livingston, Rosanne		ML13339A946	326-57
Lochbaum, David		ML14030A152	899
Lodge, Terry		ML13340A572	327-13
London, Rick		ML13339A946	326-33
Long, Marcie		ML13298A770	82
Longyear, John		ML13353A446	509
Lord, Stephen		ML13339A942	325-32
Louise, Tiffany		ML13320A018	203
Ludwig, Andy		ML13324B151	225
Luttinger, Lionel		ML13354A002	539
Lutz, Ray		ML13339A942	325-19
Lutz, Ray	Citizens Oversight	ML13360A358	930
Lynch, Laura		ML14001A024	757
Lyons, Laura		ML13320A020	205
MacKenzie, Therese		ML13316C334	157
Macks, Vic		ML13354A017	552
Macks, Vic		ML13340A572	327-27
Madden, Donna		ML14001A028	761
Magda, Marni		ML13294A573	63
Magda, Marni		ML13336A377	280
Magda, Marni		ML13339A942	325-12
Magda, Marni		ML13352A520	481
Maghakian, Carol		ML13353A005	492

Table D-3. Individuals Providing Unique Comments on the Draft GEIS and Proposed Rule (cont'd)

Commenter	Affiliation (if stated)	ADAMS Accession #	Correspondence ID
Maguire, Cynthia		ML13308C570	977
Magyar, Michael		ML14002A006	801
Maher, Ed		ML14001A037	770
Mahowald, Philip	Prairie Island Indian Community	ML13344B149	328-3
Mahowald, Philip R.	Praire Island Indian Community	ML13365A345	473
Mahowald, Philip R.	Praire Island Indian Community	ML14014A319	619
Maier, Marie		ML13280A443	36
Makhijani, Arjun		ML14030A152	898
Makhijani, Arjun		ML14030A152	953
Malboeuf, Simone		ML13360A121	686
Malboeuf, Simone		ML13339A946	326-23
Mallon, James	PSEG Power, LLC	ML14002A017	810
Malone, Patricia		ML13351A135	434
Mandrell, Rebecca		ML13358A147	625
Manfredi, Timonthy		ML13357A314	601
Maphet, Sheila		ML13323B474	250-26
March, Leslie		ML13277A455	30-12
March, Leslie		ML13282A605	45-11
Marcley-Hayes, Janet		ML13318A129	163-44
Marida, Patricia		ML13340A572	327-4
Marks, Lisa		ML13355A004	585
Marschak, Cheryl		ML14008A148	939
Marsh, Kathryn		ML13353A444	508
Martin, David		ML13308C812	978
Martin, David		ML13345B014	329-9
Martini, Shawn	Consumer Energy Alliance	ML13282A605	45-4
Martz, Robert		ML13339A175	350
Marzullo, Dominic	Utility Works Union of America Local 1-2	ML13308C187	123
Marzullo, Dominic	Utility Works Union of America Local 1-2	ML13318A129	163-6
Massey, Jennifer		ML13359A010	673
Masullo, Ginny		ML13361A005	931
Matsuda, Thomas		ML13323C011	215
Matthews, Tim	Morgan, Lewis & Bockius	ML13277A455	30-7

Table D-3. Individuals Providing Unique Comments on the Draft GEIS and Proposed Rule (cont'd)

Commenter	Affiliation (if stated)	ADAMS Accession #	Correspondence ID
Mattox, Judy		ML13345A072	368
Maurer, Bill		ML13310B069	112-23
Maurer, William		ML13358A419	652
Mauter, Nancy		ML13336A569	291
Mazzocco, Kevin		ML14001A035	768
McArdle, Ed	Michigan Sierra Club	ML14009A001	883
McArdle, Ed	Michigan Sierra Club	ML13340A572	327-9
McClintock, Francene		ML13358A429	662
McClintock, Francene		ML13358A424	657
McClintock, Francene		ML13358A430	663
McComb, Sandy		ML13330C033	245-15
McCoy, Dave		ML13354A975	559
McCraney, Richard		ML14008A436	879
McCraney, Richard		ML13340A572	327-34
McCullum, Rod		ML13277A455	30-6
McCullum, Rod	Nuclear Energy Institute	ML13310B069	112-25
McCullum, Rod	Nuclear Energy Institute	ML13323B474	250-36
McCullum, Rod	Nuclear Energy Institute	ML13330B643	244-11
McCullum, Rod	Nuclear Energy Institute	ML13330B840	246-19
McCullum, Rod	Nuclear Energy Institute	ML13330C033	245-34
McCullum, Rod	Nuclear Energy Institute	ML13345B014	329-10
McCune, Chuck		ML13330B840	246-24
McGibney, Patrick		ML13339A946	326-53
McMillian, C.C.		ML13329B043	1008
McMurrian, Katrina	Nuclear Waste Strategy Coalition	ML13330B840	246-12
McNair, Robert		ML13346A329	1002
McNeil, Dorothy F.		ML13324B622	234
Meincke, Doro		ML13354B880	564
Mellow, Marion		ML13339A946	326-62
Mermelstein, Richard	Leadership Council of the Indian Point Safe Energy Coalition	ML13360A355	341
Merrifield, Jeffrey		ML13319B256	180
Merrifield, Jeffrey		ML13323B474	250-4
Messer, Diane		ML13345B014	329-29
Messer, Diane		ML13345B014	329-4

Table D-3. Individuals Providing Unique Comments on the Draft GEIS and Proposed Rule (cont'd)

Commenter	Affiliation (if stated)	ADAMS Accession #	Correspondence ID
Messinger, Michael		ML13357A321	607
Metcalf, Michael		ML14001A006	743
Metcalf-Kemp, Joni		ML13276A237	15
Meyer, Alfred C.	Friends of Chernobyl Centers U.S.	ML13308C062	113
Meyer, Bill		ML13318A129	163-48
Meyer, Charles		ML13336B056	312
Meyer, Frederick		ML14001A000	737
Michael, Edward		ML13354B889	568
Michaud, Debra		ML13330C033	245-43
Michetti, Susan		ML14002A045	823
Michetti, Susan		ML13330B840	246-16
Mierzwicki, Tony		ML14001A064	791
Mikkelsen, Sara		ML14014A102	908
Milcarek, Thomas		ML14007A031	853
Miller, Daniel		ML14007A011	847
Miller, Kirk		ML13338A730	331
Miller, Susan		ML13340A572	327-15
Milone, Deb	Hudson Valley Gateway Chamber of Commerce	ML13318A129	163-8
Minniss, Regina	Crabshell Alliance	ML13330B840	246-15
Minno, Maria		ML13296A215	53
Minster, Bernard		ML13336B461	317
Mironova, Dr. Natalia	Movement for Nuclear Safety	ML13308C062	113
Mirsky, Steven		ML13345B014	329-2
Miskena, Jessice		ML13340A572	327-21
Mitchell, Steve		ML13359A004	667
Mock, Neal		ML13298A765	78
Moffroid, Jenn		ML13358A422	655
Moncy, Charles		ML13351A480	448
Monge, Roberto		ML13339A946	326-47
Mooney, William	Westchester County Association	ML13308C141	119
Moore, Richard		ML14002A007	802
Moran, Aliese		ML13352A473	470
Mordaunt, Brandon		ML13346A197	383
Mordaunt, Laura		ML13346A197	383

Table D-3. Individuals Providing Unique Comments on the Draft GEIS and Proposed Rule (cont'd)

Commenter	Affiliation (if stated)	ADAMS Accession #	Correspondence ID
Mordaunt, Philip		ML13346A197	383
Morgal, Richard		ML13336A375	279
Morgal, Richard		ML13339A942	325-22
Morgal, Rick		ML14002A036	826
Morgan, Leona		ML13319A931	170
Morgan, Sally	Clean Water for North Carolina	ML13353A728	531
Morris, Beverly		ML13301A564	968
Morris, Kelsi	CASEnergy Coalition	ML13310B069	112-21
Morris, Wendy		ML13351A019	426
Morrow, Jon		ML13340A572	327-43
Morrow, Jon Paul		ML13339A172	347
Mull, Steven		ML13345A061	363
Mullens, Mark		ML13350A645	394
Muller, Alan		ML13344B149	328-11
Munson, Marcia		ML14002A031	817
Murdock, J.		ML13336B481	323
Murphy, William		ML13323B474	250-56
Musegaas, Philip	RiverKeeper	ML13361A004	710
Musegaas, Philip	RiverKeeper	ML13318A129	163-2
Muser, Mary Jo		ML13340A572	327-22
Myers, Dan		ML13340A572	327-26
Myers, Susan		ML13345B014	329-34
Navrkal, Alisa		ML13282A605	45-10
Nelson, Bob	Santa Barbara County	ML13360A114	683
Nelson, David		ML13339A946	326-64
Nelson, Dennis		ML13351A006	410
Nelson, Dennis	Support and Education for Radiation Victims	ML13277A455	30-24
Nelson, Dennis R		ML13320A010	196
Nelson, Pam	Sierra Club	ML13351A527	464
Nesbit, Steve	Duke Energy	ML13323B474	250-6
Nestel, Hattie		ML13310B069	112-22
Nester, Dennis F.		ML13353A011	497
Nichols, John		ML13336B465	319
Nichols, Susan		ML14007A013	849

Table D-3. Individuals Providing Unique Comments on the Draft GEIS and Proposed Rule (cont'd)

Commenter	Affiliation (if stated)	ADAMS Accession #	Correspondence ID
Nickerson, Samantha		ML13309A846	140
Nixon, Kerry		ML13324B613	241
Norman, M. Jean		ML13336B019	305
Norton, Wayne	Decommissioning Plant Coalition	ML13358A384	637
Nuccio, Theresa		ML13338A733	334
O'Brien, Doug	Illinois Clean Energy Coalition	ML13330C033	245-16
O'Brien, Patricia		ML13353A454	511
O'Leary, David	Maryland Sierra Club	ML13330B840	246-13
O'Mahony, Emily		ML13336A572	324
O'Malley, Brian		ML13345A267	373
O'Nan, Margaret S.		ML13309A885	144
Ober, Jack		ML13319A929	169
Oeser, Robert		ML13339A693	354
Olmstead, Stan		ML13324B142	219
Olsen, Steven		ML13352A523	484
Olson, K.		ML14001A011	747
Olson, Mary		ML13323B474	250-2
Olson, Mary	Nuclear Information and Resource Service	ML13361A006	711
Orlinski, Patricia		ML13353A007	494
Osta, Hanna		ML13319A914	165
Oster, Phyllis		ML13336B041	310
Overland, Carol		ML14009A003	884
Overland, Carol		ML13344B149	328-14
Owen, Linde		ML13339A946	326-35
Ower, Douglas		ML13330C033	245-27
Owl, Griffin		ML13350A642	392
Pace, Greg	Radioactive Waste Alert	ML13340A572	327-32
Pace, Gregory	Radioactive Waste Alert	ML13354A009	546
Padden, Jim		ML13353A002	489
Paddock, Brian		ML14002A042	821
Paddock, Brian		ML13345B014	329-12
Paddock, Brian		ML13345B014	329-25
Padot, Paul		ML13340A572	327-17
Palaia, Joyce		ML13351A009	413

Table D-3. Individuals Providing Unique Comments on the Draft GEIS and Proposed Rule (cont'd)

Commenter	Affiliation (if stated)	ADAMS Accession #	Correspondence ID
Paleias, Lewis		ML13354A005	542
Paleias, Linda		ML13354A005	542
Palomarez, Javier	United States Hispanic Chamber of Commerce	ML14002A211	825
Pan, Arthur		ML13350A670	461
Parker, Bob		ML13340A572	327-30
Parks, Eric		ML13338A731	332
Parks, Sheila		ML13357A315	602
Parks, Sheila		ML13310B069	112-30
Parrish, Dave		ML13294A572	67
Pascall, Glenn		ML13351A131	431
Pascall, Glenn		ML13336A383	283
Pascall, Glenn		ML14017A116	944
Patrick, Kay		ML13351A143	436
Patrie, Lewis	Western North Carolina Physicians for Social Responsibility	ML14008A385	894
Patrie, Lewis E.	Western North Carolina Physicians for Social Responsibility	ML13323B474	250-30
Patrie, MD, MPH, Lewis E.	Western North Carolina Physicians for Social Responsibility	ML13354A008	545
Patrie, MD, MPH, Lewis E.	Western North Carolina Physicians for Social Responsibility	ML13320A003	189
Patterson, Jeffrey J.	Physicians for Social Responsibility	ML13308C062	113
Patterson, Karen	SC Governors Nuclear Advisory Council	ML13329A938	262
Paul, Jerry		ML13330B643	244-9
Paul, Stephen		ML13308C826	979
Paulsen, Carol		ML14002A018	811
Paulus, Jill		ML13330C033	245-49
Pavlik, Rayena		ML13329A940	263
Payne, Gail		ML13296A255	65
Payne, Joanne		ML13316C347	158
Pearson, Jeremy		ML13339A942	325-17
Peck, Jerry	Illinois Manufacturers Association	ML13330C033	245-9
Peck, Joe		ML13318A129	163-3
Peinado, Susan		ML13365A339	727

Table D-3. Individuals Providing Unique Comments on the Draft GEIS and Proposed Rule (cont'd)

Commenter	Affiliation (if stated)	ADAMS Accession #	Correspondence ID
Pelletier, David A.	United Association Local Union 131	ML13312A354	152
Pennington, Charlie	NAC International	ML13323B474	250-27
Perez, Robert		ML13353A630	520
Perkins, V.E.		ML13358A160	628
Peters, Mark		ML13298A197	70
Peterson, Alyse	New York State Energy Research and Development Authority	ML13365A336	681
Petro, James	NextEra	ML14002A015	808
Pflugbeil, Sebastian	German Society for Radiation Protection	ML13308C062	113
Phelan, Steven		ML13320A004	190
Phelan, Walter		ML13320A004	190
Phillips, Mark		ML13339A946	326-34
Pickens, Terry	Xcel Energy	ML13344B149	328-5
Picking, Brian		ML13358A409	642
Pieart, Richard		ML13351A306	440
Pierman, Bette	Michigan Safe Energy Future	ML13336A371	277
Pierman, Bette	Michigan Safe Energy Future	ML13330C033	245-11
Pipes, Betty		ML13304C024	106
Pisha, Gayla		ML13357A317	604
Pittillo, Dan		ML13298A766	79
Pluta, Tim		ML13303B537	98
Poole, Jesse		ML13339A922	766
Popa, Jeni		ML13304C025	107
Poprafsky, Nancy		ML13340A572	327-35
Poulson, Judi		ML13296A238	56
Poulson, Judi		ML13268A322	5
Powell, Michael		ML13317A120	149
Powers, Jim		ML14002A004	799
Pratt, Curtis		ML14027A588	947
Preobrazhenskaya, Natalia	The Save Children of Ukraine from Chernobyl Catastrophe Charitable Fund	ML13308C062	113
Preschle, Gus		ML13316C330	155
Prescott, Lisa Marie		ML13330B643	244-14
Priano, Guy		ML14021A042	917

Table D-3. Individuals Providing Unique Comments on the Draft GEIS and Proposed Rule (cont'd)

Commenter	Affiliation (if stated)	ADAMS Accession #	Correspondence ID
Priano, Guy		ML14021A047	917
Price, Scott	Alliance for Progressive Values	ML13358A415	648
Price, Scott	Alliance for Progressive Values	ML13345B014	329-30
Proeller, John		ML13353A727	530
Prosser, Audrey		ML14007A032	854
Qian, Dorothy		ML13350A646	460
Quarterman, John S.		ML14001A001	739
Quinn, Ted		ML13339A942	325-4
Racano, Joey	Nukes Templar	ML13339A946	326-12
Raimondi, Frank		ML13355A012	593
Ramsay, Rebecca		ML13353A027	499
Ramsey, Betty		ML13320A394	162
Rasmussen, Kenneth		ML13325A004	239
Ratchford, James	CASEnergy	ML13330B643	244-12
Rauterkus, Ralph	Red Wing City Council	ML13344B149	328-2
Raynier, Kathleen		ML13280A451	40
Reichardt, Dorothy		ML13336A729	300
Reimer, Matt		ML13358A349	631
Reinheimer, Alice		ML13325A000	236
Remein, Warren		ML13324B155	240
Renzoni, Dante		ML14002A005	800
Resnyanky, Dmitry		ML14001A026	759
Reson, Myla		ML13339A942	325-9
Rethmeier, Blain		ML13339A946	326-37
Revilla, Oscar		ML14001A042	774
Richards, Kitty Katherine		ML13323B474	250-39
Richardson, Carlos		ML14001A062	790
Richardson, Don		ML13316C328	154
Richardson, Don		ML14001A051	779
Riddle, William		ML13357A313	600
Rielly, Thomas P.	Vista 360	ML13304C013	956
Rielly, Thomas P.	Vista 360	ML14002A016	809
Riesterer, Zita-Ann		ML13353A461	513
Rippner, Sharon		ML13351A489	451
Rippner, Sharon		ML13339A946	326-43

Table D-3. Individuals Providing Unique Comments on the Draft GEIS and Proposed Rule (cont'd)

Commenter	Affiliation (if stated)	ADAMS Accession #	Correspondence ID
Rippner, Thomas		ML13351A489	451
Rivard, Betsey	Georgia WAND; Women's Action for New Directions; Nuclear Watch South	ML13323B474	250-29
Rivera, Evelyn		ML13358A134	620
Rivera, Wendy	MultiCultural Education Alliance	ML13311A788	150
Rivers, Alicia		ML13340A572	327-24
Robinson, David		ML13320A000	186
Robinson, David		ML13323B474	250-68
Robinson, Eric		ML13339A942	325-15
Robinson, Herb		ML13310B069	112-20
Robinson, Herb		ML13320A024	208
Rochte, Tim		ML13339A170	345
Rodack, Tom		ML13323B474	250-15
Rodarte, Ron		ML14030A541	267
Rogers, Tim		ML13323B474	250-24
Rogers, William		ML13353A637	522
Rogina, Raymond	City of St. Charles, Illinois	ML13316C344	247
Rohl, T.		ML13354C110	581
Roman, Margo		ML13310B069	112-29
Rorem, Bridget		ML13330C033	245-42
Rosanelli, Donald		ML13338A876	998
Roscoe, Lee	Cape Downwinders	ML13339A173	348
Roscoe, Lee	Cape Downwinders	ML13339A298	352
Rose, Melene		ML13316C354	161
Rosenstein, Carl		ML13329A946	268
Rosin, Lawrence		ML13316C352	160
Rosin, Lawrence		ML13329A686	258
Rossin, A. David		ML13320A005	191
Rossin, A. David		ML14008A362	889
Rossin, A. David		ML13330B643	244-4
Rossin, Linda		ML13311C320	984
Rosso, Chris		ML13330C033	245-28
Rousseau, Barbara		ML13304C022	104
Rowlett, Kimberly		ML13298A761	74
Rude, Kathleen		ML13330C033	245-32

Table D-3. Individuals Providing Unique Comments on the Draft GEIS and Proposed Rule (cont'd)

Commenter	Affiliation (if stated)	ADAMS Accession #	Correspondence ID
Rudolph, Shannon		ML13268A445	420
Rundle, Steve		ML13323B474	250-69
Ruppe, Lorraine		ML13330B840	246-23
Ryan, Kate		ML13319A916	166
Ryan, Paul		ML13311A782	148
Sabo, Betty		ML13351A309	443
Sachs, Gary		ML13310B069	112-1
Sachs, Gary		ML13310B069	112-8
Sachs, Leslie Sullivan	Safe and Green Campaign	ML13310B069	112-7
Sack, Emily		ML13318A129	163-39
Safer, Don		ML13277A455	30-5
Safer, Don	Tennessee Environmental Council	ML13323B474	250-5
Sahagian-Allsopp, Ed		ML13352A518	479
Salas, Peggy		ML13345A080	372
Salgaller, Stephen		ML13351A010	414
Salley, Lawrence	African American Men of Westchester	ML13308C083	115
Sallis, Gary	United Association of Plumbers and Pipefitters	ML13339A942	325-14
Salto, Don		ML14001A061	789
Saltzman, Dale		ML13336B463	318
Sams, David		ML13359A003	666
Sanders, John		ML14006A374	830
Sandos, Theann	ConverDyn	ML13282A605	45-15
Sass, Jim	Ottawa County	ML13340A572	327-1
Sattler, Alfred		ML14001A060	788
Sauerheber, Richard		ML14001A066	793
Saxon, Craig		ML13354B881	565
Scarff, Steve		ML13360A361	702
Scharin, Lisa		ML13301A855	92
Scheller, April		ML13280A447	38
Schepart, Margot		ML13318A129	163-14
Schepperly, David	North American Young Generation in Nuclear	ML13318A129	163-17
Scherbak, Yuri	World Academy of Art and Science	ML13308C062	113
Schietinger, Helen		ML13345A060	362

Table D-3. Individuals Providing Unique Comments on the Draft GEIS and Proposed Rule (cont'd)

Commenter	Affiliation (if stated)	ADAMS Accession #	Correspondence ID
Schilling, Francis		ML13320A234	990
Schimmelpfennig, Pamela Y.		ML13361A008	712
Schimmelpfennig, Pamela Y.		ML14007A034	712
Schlegel, Ed		ML14001A054	782
Schmidt, Otto		ML14014A093	905
Schmidt, Peg		ML13350A644	393
Schmitz, Diane		ML13269A411	25
Schneider, Howard		ML13296A358	962
Schneider, Linda		ML13302C533	971
Schneiderman, Eric		ML13318A129	163-1
Schonberger, David		ML13357A316	603
Schonberger, David		ML13340A572	327-17
Schonberger, David		ML13340A572	327-18
Schonberger, David		ML13345B014	329-36
Schonberger, David		ML13345B014	329-7
Schrader, Ken		ML13339A946	326-18
Schulte, Karen		ML13358A410	643
Schumann, Klaus		ML13339A919	358
Schumann, Klaus		ML13339A946	326-15
Schussele, Samantha		ML13330C033	245-33
Schwartz, Robert		ML13330C033	245-40
Schwartzberg, Lora		ML13280A848	9
Scott, Emily Elizabeth		ML13350A643	460
Scott, Sabra		ML14008A166	941
Sears, Peggy		ML13304C651	976
Seastrom, Tina	Nuclear Energy Information Service	ML13330C033	245-35
See, Daniel		ML13339A946	326-17
Seeley, Linda	San Luis Obispo Mothers for Peace	ML13339A946	326-9
Seeley, Linda	San Luis Obispo Mothers for Peace	ML13345B014	329-32
Seeman, Laurie		ML13308C151	120
Seeman, Laurie		ML13318A129	163-45
Segal, Elizabeth		ML13318A129	163-47
Seitz, Tim		ML13351A021	428

Table D-3. Individuals Providing Unique Comments on the Draft GEIS and Proposed Rule (cont'd)

Commenter	Affiliation (if stated)	ADAMS Accession #	Correspondence ID
Selesky, Laura		ML14007A037	858
Senkiw, Sheryl		ML13354A006	543
Severance, Beth		ML13321A545	994
Severance, Bruce		ML13339A946	326-26
Shadis, Raymond	New England Coalition And Friends of the Coast	ML13365A333	723
Shapiro, Susan		ML13357A816	611
Shapiro, Susan	Radiation Public Health Project	ML13318A129	163-7
Shaw, Gary		ML13308D085	136
Shaw, Gary		ML13318A129	163-22
Shaw, Jeanne		ML13318A129	163-35
Shaw, Sally		ML13302C183	89
Shaw, Sally		ML13310B069	112-18
Shea, Joseph	TVA	ML13360A297	694
Shelton, Matt		ML13353A485	516
Sheridan, Paul		ML13352A480	472
Shima, Tetsuo		ML13355A016	596
Shineflug, Marilyn		ML13330C033	245-29
Shinker, Carol		ML13354C109	580
Sieling, Jerry and Jean		ML13311B278	982
Silberstein, Mary		ML13336A724	296
Silver, Daniel		ML13324B153	227
Simon, Daniel		ML13324B150	224
Sipos, John	Assistant Attorney General, State of New York	ML13361A000	718
Sipos, John	Assistant Attorney General, State of New York	ML13149A446	1
Skopic, Catherine		ML13308C163	121
Skopic, Catherine		ML13318A129	163-32
Skopic, Catherine		ML14001A029	762
Skov, Jeff		ML13339A911	355
Skov, Jeff		ML13360A288	692
Skud, Bruce	No More Fukushimas	ML13294A575	64
Skud, Bruce	No More Fukushimas	ML13310B069	112-10
Smith, Adam		ML14006A388	832
Smith, Amanda	Utah Department of Environmental	ML13354C108	579

Table D-3. Individuals Providing Unique Comments on the Draft GEIS and Proposed Rule (cont'd)

Commenter	Affiliation (if stated)	ADAMS Accession #	Correspondence ID
	Quality		
Smith, Diane		ML13269A408	22
Smith, Diane		ML13336A728	299
Smith, Ed	Missouri Coalition for the Environment	ML13330C033	245-19
Smith, Roger		ML13350A676	404
Snook, Robert	Assistant Attorney General, State of Connecticut	ML13365A345	473
Snook, Robert	Assistant Attorney General, State of Connecticut	ML13149A446	1
Snyder, Gail		ML13277A455	30-10
Snyder, Gail		ML13330B840	246-25
Snyder, Gail		ML13330C033	245-30
Snyder, Mark		ML13324B154	248
Soldier, Wolf		ML14002A043	822
Solinsky, Joseph		ML13351A526	458
Solomon, Laurie		ML13309A880	142
Sondheim, Steven		ML14007A120	938
Sondheim, Steven		ML13277A455	30-13
Sondheim, Steven		ML13330B840	246-26
Sondheim, Steven		ML13345B014	329-14
Sondheim, Steven		ML13345B014	329-22
Songchild, Stephanie		ML13354B877	563
Sorensen, Laura		ML13311A775	145
Sorensen, Ole		ML13336B071	314
Sorenson, Laura	SAFE Carolinas	ML13323B474	250-45
Sorenson, Ole		ML13323B474	250-34
Sorgen, Phoebe		ML13360A103	679
Sorgen, Phoebe		ML14001A050	778
Soto, Carol		ML14001A065	792
Souza, Celine		ML14002A019	812
Sovacool, Benjamin K.	Vermont Law School	ML13308C062	113
Sovereign, David		ML13304C027	109
Spangenberg, Samuel		ML13298A195	69
Spooner, Rena		ML13339A946	326-60
Spring, Janet		ML13360A364	705

Table D-3. Individuals Providing Unique Comments on the Draft GEIS and Proposed Rule (cont'd)

Commenter	Affiliation (if stated)	ADAMS Accession #	Correspondence ID
Springer, Darren	Vermont Department of Public Service	ML13365A345	473
Springer, Darren	Vermont Department of Public Service	ML13149A446	1
Stadnik, George		ML13350A653	397
Stamm, Steve		ML13310B069	112-17
Stanick, Kim		ML13358A426	659
Stansberry, Mark		ML14002A029	816
Stansberry, Mark		ML13340A572	327-38
Star, Priscilla	Coalition Against Nukes	ML13345B014	329-15
Star, Priscilla	Coalition Against Nukes	ML13345B014	329-21
Starr, Steven	University of Missouri	ML13308C062	113
Steidler, Paul	New York Affordable Reliable Electricity Alliance	ML13318A129	163-19
Stein, Ed		ML14008A428	895
Stein, Ed		ML13323B474	250-46
Stein, Robert		ML13339A297	351
Stein, Tami		ML13320A019	204
Stennes, Nancy		ML13353A480	515
Stenson, Amanda		ML13330C033	245-18
Steorts, Tim		ML13330B643	244-6
Stewart, Jim		ML13351A017	424
Stone, Gene	Residents Organized for a Safe Environment	ML13351A133	433
Stonecipher, Carolyn		ML13303C070	90
Stork, Gilbert	Cuesta College	ML14014A311	911
Streeter, Richard		ML13304C376	101
Strell, Ethan	Columbia Center for Climate Change Law	ML13354A023	558
Strickland, Gerald	Diablo Canyon	ML13339A946	326-3
Stringfellow, Paris		ML13319B250	176
Sugas, Zick		ML13354C111	582
Sullivan, Cornelia		ML13310B069	112-33
Sullivan, Martha	Coalition to Decommission San Onofre	ML13339A942	325-20
Sunderland, Mary Brooke		ML13330B840	246-31

Table D-3. Individuals Providing Unique Comments on the Draft GEIS and Proposed Rule (cont'd)

Commenter	Affiliation (if stated)	ADAMS Accession #	Correspondence ID
Sunflower, Susan		ML13308C644	133
Swanson, Jane	San Luis Obispo Mothers for Peace	ML13336A552	287
Swanson, Jane	San Luis Obispo Mothers for Peace	ML13339A946	326-8
Swanson, Mark		ML13268A329	12
Sweeney, Jay	Green Party of Pennsylvania	ML13329A935	261
Sylvester, Richard		ML13350A669	399
Szabo, Lou		ML14008A432	875
Szabo, Lou		ML13340A572	327-19
Szymanowski, Jennifer		ML14008A438	881
Tache, Jan		ML13352A516	477
Takarabe, Tamae		ML13357A817	612
Talbot, J		ML13280A822	44
Tampas, Courtney	V.C. Summer Nuclear Station	ML13323B474	250-10
Tanner, John		ML13352A459	466
Tannler, Sandra		ML13346A199	384
Tapp, Yvette		ML13353A034	506
Taylor, David		ML13355A005	586
Taylor, Jeff		ML13354B886	567
Taylor, Tom		ML14006A447	840
Taylor, Wallace	Sierra Club Nuclear Free Campaign	ML13360A270	688
Taylor, Wallace	Sierra Club Nuclear Free Campaign	ML13344B149	328-4
Temlock, Ayumi		ML14001A015	751
Temple, Scott		ML13353A632	521
Terra, Ben		ML13336A727	298
Thabit, Nick		ML14006A439	834
Thatcher, Tami		ML14007A029	851
Thaw, Karen		ML13320A271	992
Thesling, William	The Energy From Thorium Foundation	ML13340A572	327-41
Thomas, Bill		ML13269A410	24
Thomas, Ellen		ML13323B474	250-51
Thomas, Ellen	Women's International League for Peace and Freedom, Western Carolina Branch, and Proposition One Cam	ML13319A947	174
Thomas, Richard	Affordable Reliable Electricity Alliance	ML13318A129	163-4

Table D-3. Individuals Providing Unique Comments on the Draft GEIS and Proposed Rule (cont'd)

Commenter	Affiliation (if stated)	ADAMS Accession #	Correspondence ID
Thomas, Ruth	Environmentalists, Inc.	ML14002A020	813
Thomas, Ruth	Environmentalists, Inc.	ML13319A947	174
Thome, William L.		ML14008A430	873
Thompson, Gordon R.	Institue for Resource and Security Studies	ML14030A152	916
Thompson, Lydia		ML13346A208	386
Thompson, Tammy		ML13330C033	245-17
Thompson, Tammy		ML14006A445	862
Thornlow, Ann		ML13304C021	103
Thornton, Adam	North American Young Generation in Nuclear	ML13353A734	535
Thunder, Warren Storm		ML14007A003	842
Tietjen, Jamie		ML13296A226	52
Tilbury, Don		ML14008A188	868
Tilbury, Don		ML13310B069	112-14
Titus, Mary		ML13353A724	527
Tobin, Clare		ML13330C033	245-39
Tocornal, John		ML13354B885	566
Todd, Doug		ML13340A572	327-3
Tognazzini, Randall		ML13346A186	382
Tognini, Dana		ML13358A158	627
Tolls, Leatrice		ML13340A572	327-23
Tomlin, Willie		ML13323B474	250-9
Tompkins, Robert		ML13320A009	195
Tompkins, Robert		ML13320A021	206
Tonohira, Yuko		ML13318A129	163-31
Tonohira, Yuko		ML13309A862	141
Totoiu, Jason	Everglades Law Center	ML13330B643	244-8
Trahey, Linda		ML13346A236	391
Tucker, Alison		ML14001A032	765
Tulenko, James	University of Florida	ML13330B643	244-1
Turnbow, Lisa M.		ML13294A038	58
Turner, D		ML14027A588	947
Uhls, Agnes		ML14001A044	935
Utley, Charles	Blue Ridge Environmental Defense League	ML13323B474	250-8

Table D-3. Individuals Providing Unique Comments on the Draft GEIS and Proposed Rule (cont'd)

Commenter	Affiliation (if stated)	ADAMS Accession #	Correspondence ID
Vale, Karen	Cape Cod Bay Watch	ML13358A137	622
Vale, Karen	Cape Cod Bay Watch	ML13310B069	112-16
Van Leekwijck, Natalie		ML14027A588	947
van Thillo, Grace		ML13359A002	665
Van Wicklen, Betty J.		ML13268A324	6
Vandel, Niki		ML13277A455	30-11
Vandel, Niki		ML13345B014	329-19
Vandel, Niki		ML13345B014	329-6
Vandel, Nikohl		ML13358A386	639
Vandel, Nikohl		ML13360A362	703
Vandel, Nikohl		ML13339A946	326-36
Vandenberg Clermont, Elaine		ML13360A362	703
Vandenbosch, Robert		ML13269A414	27
Vanderlan, Kelly		ML13365A346	733
Vanderwoerd, Jennifer		ML13323C015	217
VanWicklen, Betty J.		ML13340A515	1000
Vejdani, Vivianne	SC Department of Natural Resources	ML13354A978	560
Velazquez, Lisette		ML13365A349	735
Vesperman, Gary		ML13329A807	550
Vetter, Richard	Health Physics Society	ML13353A732	534
Vilen, Sydney		ML13351A187	1005
Vince, Jenny	Clean and Safe Energy Coalition	ML13330B840	246-8
Von Duvillard, Serge		ML13311C450	985
Von Thillo, Grace		ML13339A942	325-8
Vytlacil, Gordon	Generation mPower	ML13319B258	182
Vytlacil, Gordon	Generation mPower	ML13323B474	250-65
Waage, Edward		ML13336B063	313
Waddell, Duane		ML13339A946	326-38
Wagner, Deborah		ML13318A489	988
Wagner, Jim and Virginia		ML13280A097	34
Wagner, Sam		ML13344B149	328-13
Waldstein, Joe		ML13351A496	454
Walking Turtle, Willow		ML13339A946	326-6
Waller, Viviane		ML13339A942	325-34

Table D-3. Individuals Providing Unique Comments on the Draft GEIS and Proposed Rule (cont'd)

Commenter	Affiliation (if stated)	ADAMS Accession #	Correspondence ID
Walter, Beverly		ML13330C033	245-48
Walter, Joan	California Energy Commission	ML13359A006	669
Warren, Barbara	Citizens Environmental Coalition	ML13360A292	693
Waterman, Charles		ML13281A076	50
Waters, Christine		ML13319B257	181
Watkins, Conor		ML13353A001	488
Watkins, Karen		ML13304C570	975
Watland, George		ML13351A131	431
Watland, George		ML13354A003	540
Watland, George		ML13336A383	283
Watland, George		ML14017A116	944
Watson, Jeannette		ML14008A170	408
Wayland, Gregory		ML13312A106	986
Webb, David		ML13320A013	197
Webb, Hubert		ML13311C141	983
Weinberg, Luz	City of Aventura, Florida	ML13336B030	308
Weisman, David	Alliance for Nuclear Responsibility	ML13354A010	547
Weisman, David	Alliance for Nuclear Responsibility	ML13339A946	326-13
Weissglass, Theresa		ML13339A946	326-39
Wells, Gerald		ML14007A010	846
Wells, Harmony		ML13318A771	989
Wells, Jim		ML13358A418	651
Wellwood, Jay		ML13323B474	250-25
Welty, Delores		ML13339A942	325-25
Werner, Shahla M.	Sierra Club- John Muir Chapter	ML13361A001	707
Wesley, Ashleigh	Southern Nuclear	ML13323B474	250-32
Westchester, Business Council of		ML13308C119	118
Whiting-Broeder, Pamela		ML14007A012	848
Wickham, Wendelyn		ML13336A562	288
Wicks, Tonja	TLW Legal and Government Support Services	ML13357A310	598
Wicks, Tonja	TLW Legal and Government Support Services	ML13339A942	325-13
Wieder, Dr. Robin		ML13308C599	124
Wigglesworth, Marilyn		ML14027A588	947

Table D-3. Individuals Providing Unique Comments on the Draft GEIS and Proposed Rule (cont'd)

Commenter	Affiliation (if stated)	ADAMS Accession #	Correspondence ID
Wilansky, Laura		ML13360A122	687
Wilansky, Laura		ML13345B014	329-28
Wilde, Paul		ML13302A491	970
Williams, Chris	Citizen's Awareness Network	ML13310B069	112-15
Williams, David		ML13329A934	260
Williams, Jim	Western Interstate Energy Board	ML13353A033	505
Williams, Robert		ML13354A014	549
Wilmott, Emily		ML13338A739	339
Wilshire, Howard		ML13354A018	553
Wilshire, Howard		ML14002A010	805
Wilson, Annie	New York Environmental Law and Justice Project	ML13318A129	163-5
Wilson, Greg		ML13360A360	701
Wilson, Greg		ML13345B014	329-8
Wilson, Greg	Coalition Against Nukes	ML13345B014	329-24
Wilson, Greg	Windjammer Energy Incorporated	ML13330B643	244-13
Wilson, Lavern		ML13324B616	228
Wilson, Reed	The Office of Congressman Adam Kinzinger	ML13330C033	245-1
Wilvert, Calvin		ML13345B263	375
Wilvert, Calvin		ML14008A353	872
Wilvert, Rosemary		ML14008A359	888
Wilvert, Rosemary		ML13339A946	326-40
Windsong, Debra		ML13350A673	462
Wing, Steve	University of North Carolina	ML13308C062	113
Wolf, Ann		ML13304C028	110
Wolf, Peter		ML13318A129	163-16
Wolf, Robert S.		ML13345A075	370
Wolf, Tom		ML13336A367	275
Wolf, Tom		ML13330C033	245-2
Wolpoff, Deborah		ML13365A341	729
Women's Action for New Direction, Georgia		ML13360A359	700
Wood, Keely		ML13308C633	128
Wood, Nick		ML13323B474	250-55
Woodward, Julie		ML13305A112	102

Table D-3. Individuals Providing Unique Comments on the Draft GEIS and Proposed Rule (cont'd)

Commenter	Affiliation (if stated)	ADAMS Accession #	Correspondence ID
Woodward, Julie		ML13318A129	163-37
Wopat, Jeen		ML13351A132	432
Worthington, Juniel		ML14001A036	769
Wrenn, Nancy		ML13308C096	116
Wrenn, Nancy		ML13310B069	112-6
Wright, Margaret Z.		ML14009A000	882
Wylie, Robert	Duke Energy	ML14008A383	893
Wythe Elnagar, Romi		ML13361A003	709
Yablokov, Alexey	International Socio-Ecology Union	ML13308C062	113
Yarrobino, Erin		ML14027A588	947
Yelda, Peter		ML13345A062	364
Young, Jane		ML13354B899	571
Young, Roberta		ML13336A743	304
Yusuf, Hassan		ML13339A691	353
Zaitz, Kristin		ML13339A946	326-41
Zaklan, Jill		ML13319A912	164
ZamEk, Jill	San Luis Obispo Mothers for Peace	ML13339A946	326-10
Zawalick, Steven		ML13339A946	326-48
Zeller, Lou	Blue Ridge Environmental Defense League	ML13324B147	222
Zeller, Lou	Blue Ridge Environmental Defense League	ML13323B474	250-1
Zeller, Lou	Blue Ridge Environmental Defense League	ML13330B840	246-7
Zeller, Louis	Blue Ridge Environmental Defense League	ML13365A330	720
Zidbeck, George		ML13280A445	37
Zigler, Randy		ML13339A942	325-33
Zimmem, Matt		ML13351A481	449
Zuccarini, Ana		ML13330B643	244-15
Zuckerman, Naomi		ML13268A327	10
Zure, Lisa		ML13357A823	617
Zure, Lisa		ML14001A043	775

(a) For administrative reasons, "Commenters, Multiple" is listed as the sole author of the comments, but the NRC notes the additional signatories to these comment documents. A complete listing of commenters can be found in the document that accompanies the GEIS (ADAMS Accession No. ML14154A175).

References

10 CFR Part 2. *Code of Federal Regulations*, Title 10, *Energy*, Part 2, “Agency Rules of Practice and Procedure.” Washington, D.C.

10 CFR Part 20. *Code of Federal Regulations*, Title 10, *Energy,* Part 20, “Standards for Protection Against Radiation.” Washington, D.C.

10 CFR Part 50. *Code of Federal Regulations*, Title 10, *Energy,* Part 50, “Domestic Licensing of Production and Utilization Facilities.” Washington, D.C.

10 CFR Part 51. *Code of Federal Regulations*, Title 10, *Energy,* Part 51, “Environmental Protection Regulations for Domestic Licensing and Related Regulatory Functions.” Washington, D.C.

10 CFR Part 52. *Code of Federal Regulations*, Title 10, *Energy,* Part 52, “Licenses, Certifications, and Approvals for Nuclear Power Plants.” Washington, D.C.

10 CFR Part 54. *Code of Federal Regulations*, Title 10, *Energy,* Part 54, “Requirements for Renewal of Operating Licenses for Nuclear Power Plants.” Washington, D.C.

10 CFR Part 60. *Code of Federal Regulations*, Title 10, *Energy,* Part 60, “Disposal of High-Level Radioactive Wastes in Geologic Repositories.” Washington, D.C.

10 CFR Part 61. *Code of Federal Regulations*, Title 10, *Energy,* Part 61, “Licensing Requirements for Land Disposal of Radioactive Waste.” Washington, D.C.

10 CFR Part 63. *Code of Federal Regulations*, Title 10, *Energy,* Part 63, “Disposal of High-Level Radioactive Wastes in a Geologic Repository at Yucca Mountain, Nevada.” Washington, D.C.

10 CFR Part 71. *Code of Federal Regulations*, Title 10, *Energy*, Part 71, "Packaging and Transportation of Radioactive Material." Washington, D.C.

10 CFR Part 72. *Code of Federal Regulations*, Title 10, *Energy,* Part 72, “Licensing Requirements for the Independent Storage of Spent Nuclear Fuel, High-Level Radioactive Waste, and Reactor-Related Greater than Class C Waste.” Washington, D.C.

10 CFR Part 73. *Code of Federal Regulations*, Title 10, *Energy,* Part 73, “Physical Protection of Plants and Materials.” Washington, D.C.

10 CFR Part 100. *Code of Federal Regulations*, Title 10, *Energy,* Part 100, “Reactor Site Criteria.” Washington, D.C.

10 CFR Part 170. *Code of Federal Regulations*, Title 10, *Energy,* Part 170, “Fees for Facilities, Materials, Import and Export Licenses, and Other Regulatory Services Under the Atomic Energy Act of 1954 as Amended.” Washington, D.C.

10 CFR Part 171. *Code of Federal Regulations*, Title 10, *Energy,* Part 171, “Annual Fees for Reactor Operating Licenses and Fuel Cycle Licenses and Materials Licenses, Including Holders of Certificates of Compliance, Registrations, and Quality Assurance Program Approvals and Government Agencies Licensed by the NRC.” Washington, D.C.

10 CFR Part 961. *Code of Federal Regulations*, Title 10, *Energy,* Part 961, “Standard Contract for Disposal of Spent Nuclear Fuel and/or High-Level Radioactive Waste.” Washington, D.C.

36 CFR Part 800. *Code of Federal Regulations*, Title 36, *Parks, Forests, and Public Property*, Part 800, "Protection of Historic Properties." Washington, D.C.

40 CFR Part 93. *Code of Federal Regulations*, Title 40, *Protection of Environment*, Part 93, “Determining Conformity of Federal Actions to State or Federal Implementation Plans.” Washington, D.C.

40 CFR Part 197. *Code of Federal Regulations*, Title 40, *Protection of Environment*, Part 197, “Public Health and Environmental Radiation Protection Standards for Yucca Mountain, Nevada.” Washington, D.C.

40 CFR Part 300. *Code of Federal Regulations*, Title 40, *Protection of Environment*, Part 300, “National Oil and Hazardous Substances Pollution Contingency Plan.” Washington, D.C.

40 CFR Parts 1500 through 1508. *Code of Federal Regulations*, Title 40, *Protection of Environment*, Parts 1500, “Purpose, Policy, and Mandate” through 1508 “Terminology and Index.” Washington, D.C.

49 CFR Part 107. *Code of Federal Regulations*, Title 49, *Transportation*, Part 107, “Hazardous Materials Program Procedures.” Washington, D.C.

49 CFR Parts 171-180. *Code of Federal Regulations*, Title 49, *Transportation*, Parts 171-180, “Hazardous Materials Regulations.” Washington, D.C.

49 CFR Parts 390-397. *Code of Federal Regulations*, Title 49, *Transportation*, Parts 390-397, “Federal Motor Carrier Safety Regulations.” Washington, D.C.

50 CFR Part 402. *Code of Federal Regulations*, Title 50, *Wildlife and Fisheries*, Part 402, “Interagency Cooperation—Endangered Species Act of 1973, as Amended.” Washington, D.C.

44 FR 34393. June 14, 1979. “National Pollutant Discharge Elimination System; Revision of Existing Regulations.” *Federal Register*, U.S. Environmental Protection Agency, Washington, D.C.

45 FR 40101. June 13, 1980. “Nuclear Power Plant Accident Considerations Under the National Environmental Policy Act of 1969.” *Federal Register*, U.S. Nuclear Regulatory Commission, Washington, D.C.

45 FR 74699. November 12, 1980. “Licensing Requirements for the Storage of Spent Fuel in an Independent Spent Fuel Storage Installation (ISFSI).” *Federal Register*, U.S. Nuclear Regulatory Commission, Washington, D.C.

49 FR 34688. August 31, 1984. “Waste Confidence Decision.” *Federal Register*, U.S. Nuclear Regulatory Commission, Washington, D.C.

51 FR 30028. August 21, 1986. “Safety Goals for the Operations of Nuclear Power Plants; Policy Statement; Republican.” *Federal Register*, U.S. Nuclear Regulatory Commission, Washington, D.C.

53 FR 20603. June 6, 1988. “Revision of Backfitting Process for Power Reactors.” *Federal Register*, U.S. Nuclear Regulatory Commission, Washington, D.C.

55 FR 29181. July 18, 1990. “General License for Storage of Spent Fuel at Power Reactor Sites.” *Federal Register*, U.S. Nuclear Regulatory Commission, Washington, D.C.

55 FR 38472. September 18, 1990. “Consideration of Environmental Impacts of Temporary Storage of Spent Fuel After Cessation of Reactor Operation; Final Rule.” *Federal Register*, U.S. Nuclear Regulatory Commission, Washington, D.C.

55 FR 38474. September 18, 1990. “Waste Confidence Decision Review.” *Federal Register*, U.S. Nuclear Regulatory Commission, Washington, D.C.

59 FR 7629. February 11, 1994. “Executive Order 12898: Federal Actions to Address Environmental Justice in Minority Populations and Low-Income Populations.” *Federal Register*, Executive Office of the President, Washington, D.C.

61 FR 26771. May 29, 1996. “Indian Sacred Sites.” Executive Order 13007, *Federal Register*, Presidential Documents, Washington, D.C.

61 FR 28467. June 5, 1996. “Environmental Review for Renewal of Nuclear Power Plant Operating Licenses.” *Federal Register*, U.S. Nuclear Regulatory Commission, Washington, D.C.

65 FR 67249. November 9, 2000. “Consultation and Coordination With Indian Tribal Governments.” Executive Order 13175, *Federal Register*, Presidential Documents, Washington, D.C.

66 FR 9055. February 6, 2001. “Prairie Island Coalition; Denial of Petition for Rulemaking.” *Federal Register*, U.S. Nuclear Regulatory Commission, Washington, D.C.

69 FR 52040. August 24, 2004. “Policy Statement on the Treatment of Environmental Justice Matters in NRC Regulatory and Licensing Actions.” *Federal Register*, U.S. Nuclear Regulatory Commission, Washington, D.C.

72 FR 49352. August 28, 2007. “Licenses, Certifications, and Approvals for Nuclear Power Plants.” *Federal Register*, U.S. Nuclear Regulatory Commission, Washington, D.C.

73 FR 46204. August 8, 2008. “The Attorney General of Commonwealth of Massachusetts, The Attorney General of California; Denial of Petitions for Rulemaking.” *Federal Register*, U.S. Nuclear Regulatory Commission, Washington, D.C.

74 FR 66496. December 15, 2009. “Endangerment and Cause or Contribute Findings for Greenhouse Gases Under Section 2029a) of the Clean Air Act.” *Federal Register*, U.S. Environmental Protection Agency, Washington, D.C.

74 FR 66589. December 16, 2009. “Draft Technical Basis for Rulemaking Revising Security Requirements for Facilities Storing SNF and HLW; Notice of Availability and Solicitation of Public Comments.” *Federal Register*, U.S. Nuclear Regulatory Commission, Washington, D.C.

75 FR 31514. June 3, 2010. "Prevention of Significant Deterioration and Title V Greenhouse Gas Tailoring Rule." *Federal Register*, U.S. Environmental Protection Agency, Washington, D.C.

75 FR 81032. December 23, 2010. “Consideration of Environmental Impacts of Temporary Storage of Spent Fuel After Cessation of Reactor Operation.” Final Rule, *Federal Register*, U.S. Nuclear Regulatory Commission, Washington, D.C.

75 FR 81037. December 23, 2010. “Waste Confidence Decision Update.” *Federal Register*, U.S. Nuclear Regulatory Commission, Washington, D.C.

76 FR 8872. February 16, 2011. “License and Certificate of Compliance Terms.” *Federal Register*, U.S. Nuclear Regulatory Commission, Washington, D.C.

76 FR 35512. June 17, 2011. “Decommissioning Planning.” *Federal Register*, U.S. Nuclear Regulatory Commission, Washington, D.C.

77 FR 16175. March 20, 2012. "Station Blackout." *Federal Register*, U.S. Nuclear Regulatory Commission, Washington, D.C.

77 FR 63254. October 16, 2012. "Petition for Rulemaking Submitted by C-10 Research and Education Foundation, Inc." *Federal Register*, U.S. Nuclear Regulatory Commission, Washington, D.C.

77 FR 65137. October 25, 2012. "Consideration of Environmental Impacts of Temporary Storage of Spent Fuel After Cessation of Reactor Operation." *Federal Register*. U.S. Nuclear Regulatory Commission.

77 FR 74788. December 18, 2012. "Long-Term Cooling and Unattended Water Makeup of Spent Fuel Pools." *Federal Register*, U.S. Nuclear Regulatory Commission, Washington, D.C.

78 FR 29520. May 20, 2013. "Physical Protection of Irradiated Reactor Fuel in Transit." *Federal Register*, U.S. Nuclear Regulatory Commission, Washington, D.C.

78 FR 54789. September 6, 2013. "Proposed Waste Confidence Rule and Draft Generic Environmental Impact Statement." *Federal Register*, U.S. Nuclear Regulatory Commission, Washington, D.C.

78 FR 56621. September 13, 2013. "Draft Waste Confidence Generic Environmental Impact Statement." *Federal Register*, U.S. Nuclear Regulatory Commission, Washington, D.C.

78 FR 56776. September 13, 2013. "Waste Confidence—Continued Storage of Spent Nuclear Fuel." *Federal Register*, U.S. Nuclear Regulatory Commission, Washington, D.C.

78 FR 57538. September 19, 2013. "Proposed Waste Confidence Rule and Draft Generic Environmental Impact Statement." *Federal Register*, U.S. Nuclear Regulatory Commission, Washington, D.C.

78 FR 66858. November 7, 2013. "Waste Confidence—Continued Storage of Spent Nuclear Fuel." *Federal Register*, U.S. Nuclear Regulatory Commission, Washington, D.C.

78 FR 77606. December 24, 2013. "Security Requirements for Facilities Storing Spent Nuclear Fuel." *Federal Register*, U.S. Nuclear Regulatory Commission, Washington, D.C.

79 FR 1901. January 10, 2014. "Exelon Generation Company, LLC; License Exemption Request for Oyster Creek Nuclear Generating Station." *Federal Register*, U.S. Nuclear Regulatory Commission, Washington, D.C.

79 FR 13685. March 11, 2014. "Monitoring of Neutron-Absorbing Materials in Spent Fuel Pools." *Federal Register*, U.S. Nuclear Regulatory Commission, Washington, D.C.

79 FR 19501. April 9, 2014. "Emergency Planning Zones." *Federal Register*, U.S. Nuclear Regulatory Commission, Washington, D.C.

79 FR 22055. April 21, 2014. "Revise and Integrate All Safety and Environmental Regulations Related to Spent Fuel Storage and Disposal." *Federal Register*, U.S. Nuclear Regulatory Commission, Washington, D.C.

6 NYCRR 701. *New York Codes, Rules and Regulations*, Title 6, Environmental Conservation, Part 701, "Classifications—Surface Waters and Groundwaters."

6 NYCRR 703. *New York Codes, Rules and Regulations*, Title 6, Environmental Conservation, 703, "Surface Water and Groundwater Quality Standards and Groundwater Effluent Limitations."

5 USC 551. *United States Code*, Title 5, *Government Organization and Employees*, Chapter 5, "Administrative Procedure", 551 "Definitions."

42 USC 2133. *United States Code*, Title 42, *The Public Health and Welfare*, Chapter 23, "Development and Control of Atomic Energy", Section 2133, "Commercial Licenses." Washington, D.C.

Administrative Procedure Act of 1946 (APA), as amended. 5 USC 500 *et seq.*

Affordable Care Act of 2010 (ACA), as amended. 42 USC 18001 *et seq*.

Alvarez, R. 2011. *Spent Nuclear Fuel Pools in the U.S.: Reducing the Deadly Risks of Storage*. Institute for Policy Studies, Washington, D.C.

Alvarez, R., J. Beyea, K. Janberg, J. Kang, E. Lyman, A. Macfarlane, G. Thompson, and F.N. von Hippel. 2003. "Reducing the Hazards from Stored Spent Power-Reactor Fuel in the United States." *Science and Global Security* 11:1-51.

ACS (American Cancer Society). 2001. "1998 Facts & Figures. Environmental Cancer Risks." Atlanta, Georgia.

AEC (Atomic Energy Commission). 1972. *Environmental Survey of Transportation of Radioactive Materials to and From Nuclear Power Plants*. WASH-1238, Washington, D.C. Available at http://www.osti.gov/energycitations/product.biblio.jsp?osti_id=4569134.

ANS (American Nuclear Society). 1987. *Guidelines for the Verification and Validation of Scientific and Engineering Codes for the Nuclear Industry*. ANSI/ANS-10.4-1987, La Grange Park, Illinois.

ASME (American Society of Mechanical Engineers). 1994. "Quality Assurance Requirements for Nuclear Facilities." NQA-1-1994, New York, New York.

ASME (American Society of Mechanical Engineers). 2012. *Forging a New Nuclear Safety Construct*. Presidential Task Force on Response to Japan Nuclear Power Plant Events, New York, New York. Available at https://www.asme.org/getmedia/73081de8-e963-4557-9498-f856b56dabd1/Forging_a_new_nuclear_safety_construct.aspx.

Atomic Energy Act of 1954 (AEA), as amended. 42 USC 2010 *et seq*.

Bald and Golden Eagle Protection Act of 1940, as amended. 16 USC 668-668d *et seq.*

Baltimore Gas & Elec. Co. v. NRDC (Natural Resources Defense Council, Inc.). 462 U.S. 87 (1983). Accession No. ML14091A199.

Bechtel (Bechtel SAIC Company LLC). 2005. *Commercial Spent Nuclear Fuel Handling in Air Study*. Report 000-30R-MGR0-00700-000-000, Las Vegas, Nevada.

BRC (Blue Ribbon Commission on America's Nuclear Future). 2012. *Report to the Secretary of Energy.* Washington, D.C. Accession No. ML120970375.

Calvert Cliffs' Coordinating Comm., Inc. v. AEC (U.S. Atomic Energy Commission). 449 F.2d 1109 (D.C. Cir. 1971).

Carolina Evntl. Study Grp. v. United States. 510 F.2d 796 (D.C. Cir. 1975).

CASE (Connecticut Academy of Science and Engineering). 2001. "Study of Radiation Exposure from the Connecticut Yankee Nuclear Power Plant." Bulletin of the Connecticut Academy of Science and Engineering, Volume 16.2, Hartford, Connecticut. Available at http://www.ctcase.org/bulletin/16_2.pdf.

CEQ (Council on Environmental Quality). 2003. *Modernizing NEPA Implementation*. Washington, D.C. Available at http://ceq.hss.doe.gov/ntf/report/finalreport.pdf.

CEQ (Council on Environmental Quality). 2010. Memorandum from N.H. Sutley to Heads of Federal Departments and Agencies dated February 18, 2010, regarding "Draft NEPA Guidance on Consideration of the Effects of Climate Change and Greenhouse Gas Emissions." Washington, D.C. Accession No. ML100601337.

CEQ (Council on Environmental Quality). 2012. Memorandum from N.H. Sutley to Heads of Federal Departments and Agencies, dated March 6, 2012, regarding "Improving the Process for Preparing Efficient and Timely Environmental Reviews under the National Environmental Policy Act." Washington, D.C.

City of New York v. Dep't of Transp. 715 F. 2d 732 (2nd Cir. 1983).

Clean Water Act (See Federal Water Pollution Control Act of 1972).

Coastal Zone Management Act of 1972, as amended. 16 USC 1451 *et seq.*

Comprehensive Environmental Response, Compensation, and Liability Act of 1980 (CERCLA), as amended. 42 USC 9601 *et seq.*

Consolidated Edison Co. of N.Y. v. United States. 92 Fed. Cl. 466 (2010).

Copinger, D.A., C.B. Oland, and D.J. Naus. 2012. *A Summary of Aging Effects and Their* 24 *Management in Reactor Spent Fuel Pools, Refueling Cavities, Tori, and Safety-Related* 25 *Concrete Structures*. NUREG/CR–7111, Oak Ridge National Laboratory, Oak Ridge, Tennessee. Accession No. ML12047A184.

DEF (Duke Energy Florida). 2013. *Crystal River Unit 3—Post-Shutdown Decommissioning Activities Report*. Crystal River, Florida. Accession No. ML13340A009.

DEK (Dominion Energy Kewaunee, Inc.) 2013a. *Kewaunee Power Station Post-Shutdown Decommissioning Activities Report.* Glen Allen, Virginia. Accession No. ML13063A248.

DEK (Dominion Energy Kewaunee, Inc.) 2013b. Letter from M.D. Sartain to NRC, dated December 11, 2013, regarding "Dominion Energy Kewaunee, Inc. Kewaunee Power Station Supplement 1 and Response to Request for Additional Information Regarding Request for Exemptions from Portions of 10 CFR 50.47 and 10 CFR 50, Appendix E." Glen Allen, Virginia. Accession No. ML13351A040.

DOE (U.S. Department of Energy). 1996. *Dry Transfer System Topical Safety Analysis Report.* Volume I, Washington, D.C. Accession No. ML060730035.

DOE (U.S. Department of Energy). 1997. *Waste Isolation Pilot Plant Disposal Phase Final Supplemental Environmental Impact Statement.* DOE/EIS-0026-S-2, Carlsbad, New Mexico. Available at http://energy.gov/sites/prod/files/EIS-0026-S2-FEIS-v01-1997.pdf.

DOE (U.S. Department of Energy). 2002. *Final Environmental Impact Statement for a Geologic Repository for the Disposal of Spent Nuclear Fuel and High-Level Radioactive Waste at Yucca Mountain, Nye County, Nevada*. DOE/EIS-0250, Office of Civilian Radioactive Waste Management, Washington, D.C. Accession No. ML14024A327.

DOE (U.S. Department of Energy). 2008. *Final Supplemental Environmental Impact Statement for a Geologic Repository for the Disposal of Spent Nuclear Fuel and High-Level Radioactive Waste at Yucca Mountain, Nye County, Nevada*. DOE/EIS-0250F-S1, Office of Civilian Radioactive Waste Management, Las Vegas, Nevada. Accession No. ML081750212.

DOE (U.S. Department of Energy). 2011a. *Inventory and Description of Commercial Reactor Fuels Within the United States*. Fuel Cycle Research and Development, Savannah River National Laboratory, Aiken, South Carolina. Available at http://sti.srs.gov/fulltext/SRNL-STI-2011-00228.pdf.

DOE (U.S. Department of Energy). 2011b. *Draft Environmental Impact Statement for the Disposal of Greater-Than-Class C (GTCC) Low-Level Radioactive Waste and GTCC-Like Waste*. DOE/EIS-0375-D, Washington, D.C. Accession No. ML110660603.

DOE (U.S. Department of Energy). 2013a. *Strategy for the Management and Disposal of Used Nuclear Fuel and High-Level Radioactive Waste*. Washington, D.C. Accession No. ML13011A138.

DOE (U.S. Department of Energy). 2013b. *Software Quality Assurance Improvement Plan: MACCS2 Gap Analysis*. DOE-EH-4.2.1.3-MACCS2-Gap Analysis, Washington, D.C. Available at http://energy.gov/sites/prod/files/2013/07/f2/Final_MACCS2_Gap_Analysis_Report050304.pdf.

DOS (U.S. Department of State). 2011. "Statement by U.S. Ambassador John V. Roos on Japan's Earthquake and Tsunamis." Tokyo, Japan. Available at http://www.state.gov/p/eap/rls/rm/2011/03/158441.htm.

Earthrise Law Center. 2013. Letter from K. Cassidy to NMFS and NRC dated March 22, 2013, regarding "Request to Reinitiate ESA Section 7 Consultation Related to Operation of the Pilgrim Nuclear Power Station in Plymouth, MA." Norwell, Massachusetts. Accession No. ML13094A124.

Elam, K.R., J.C. Wagner, and C.V. Parks. 2003. *Effects of Fuel Failure on Criticality Safety and Radiation Dose for Spent Fuel Casks*. NUREG/CR–6835, Oak Ridge National Laboratory, Oak Ridge, Tennessee. Accession No. ML032880058.

ELI (Environmental Law Institute). 1995. *Institutional Controls in Use*. Washington, D.C. Available at http://www.eli.org/sites/default/files/eli-pubs/d7.02.pdf.

Endangered Species Act of 1973 (ESA), as amended. 16 USC 1531 *et seq.*

Energy Policy Act of 2005, as amended. 42 USC 15801 *et seq.*

Energy Reorganization Act of 1974, as amended. 42 USC 5801 *et seq.*

EPA (Environmental Protection Agency). 1999. *Use of Monitored Natural Attenuation at Superfund, RCRA Corrective Action, and Underground Storage Tank Sites.* Office of Solid Waste and Emergency Response Directive 9200.4-17P, Washington, D.C. Available at http://www.epa.gov/oust/directiv/d9200417.pdf.

EPA (Environmental Protection Agency). 2011. *Recommended Evaluation of Institutional Controls: Supplement to the 'Comprehensive Five-Year Review Guidance*. OSWER Directive 9355.7-18, Washington, D.C. Available at http://www.epa.gov/superfund/cleanup/postconstruction/641333.pdf.

EPA (Environmental Protection Agency). 2012. *Institutional Controls: A Guide to Preparing Institutional Control Implementation and Assurance Plans at Contaminated Sites*. EPA-540-R-09-002, Washington, D.C. Available at http://www.epa.gov/superfund/policy/ic/guide/ICIAP%20guidance%20(FINAL)%20-%2012.04.2012.pdf.

EPA (Environmental Protection Agency). 2013. *PAG Manual—Protective Action Guides and Planning Guidance for Radiological Incidents*. Draft for Interim Use and Public Comment, Washington, D.C. Available at http://www.epa.gov/radiation/docs/er/pag-manual-interim-public-comment-4-2-2013.pdf.

EPRI (Electric Power Research Institute). 2004a. *Spent Nuclear Fuel Transportation—An Overview*. Report 1009226, Palo Alto, California. Available at http://www.epri.com/abstracts/Pages/ProductAbstract.aspx?ProductId=000000000001009226.

EPRI (Electric Power Research Institute). 2004b. *Probability Risk Assessment (PRA) of Bolted Storage Casks: Updated Quantification and Analysis Report.* Report 1009691, Palo Alto, California. Available at http://www.epri.com/abstracts/Pages/ProductAbstract.aspx?ProductId=000000000001009691.

EPRI (Electric Power Research Institute). 2006a. *Assessment of Accident Risk for Transport of Spent Nuclear Fuel to Yucca Mountain using RADTRAN 5.5*. Report 1013450, Palo Alto, California. Available at http://www.epri.com/abstracts/Pages/ProductAbstract.aspx?ProductId=000000000001013450.

EPRI (Electric Power Research Institute). 2006b. *Summary of the NAS Report, "Going the Distance? The Safe Transport of Spent Nuclear Fuel and High-Level Radioactive Waste in the United States"*. Report 1010075, Palo Alto, California. Available at http://www.epri.com/abstracts/Pages/ProductAbstract.aspx?ProductId=000000000001010075.

EPRI (Electric Power Research Institute). 2007a. *Spent-Fuel Transportation Applications—Normal Conditions of Transport*. Report 1015049, Palo Alto, California. Available at http://www.epri.com/abstracts/Pages/ProductAbstract.aspx?ProductId=000000000001015049.

EPRI (Electric Power Research Institute). 2007b. *Fuel Relocation Effects for Transportation Packages*. Report 1015050, Palo Alto, California. Available at http://www.epri.com/abstracts/Pages/ProductAbstract.aspx?ProductId=000000000001015050.

EPRI (Electric Power Research Institute). 2007c. *Spent Fuel Transportation Applications—Assessment of Cladding Performance*. Report 1015048, Palo Alto, California. Available at http://www.epri.com/abstracts/Pages/ProductAbstract.aspx?ProductId=000000000001015048.

EPRI (Electric Power Research Institute). 2008. *Criticality Risks During Transportation of Spent Nuclear Fuel*. Revision 1, Report 1016635, Palo Alto, California. Available at http://www.epri.com/abstracts/Pages/ProductAbstract.aspx?ProductId=000000000001016635.

EPRI (Electric Power Research Institute). 2010a. *Industry Spent Fuel Storage Handbook*. Palo Alto, California. Available at http://www.epri.com/abstracts/Pages/ProductAbstract.aspx?ProductId=000000000001021048.

EPRI (Electric Power Research Institute). 2010b. *Transportation of Commercial Spent Nuclear Fuel: Regulatory Issues Resolution*. Report 1016637, Palo Alto, California. Available at http://www.epri.com/abstracts/Pages/ProductAbstract.aspx?ProductId=000000000001016637.

EPRI (Electric Power Research Institute). 2012. *Impacts Associated with Transfer of Spent Nuclear Fuel from Spent Fuel Storage Pools to Dry Storage After Five Years of Cooling, Revision 1*. Report 1025206, Palo Alto, California. Available at http://www.epri.com/Abstracts/Pages/ProductAbstract.aspx?ProductID=000000000001021049.

Federal Water Pollution Control Act of 1972, as amended (also referred to as the Clean Water Act). 33 USC 1251 *et seq.*

Fettus, G.H., M. Goldstein, and D. Curran. 2012. Letter to NRC dated November 8, 2012, regarding "Notice of Intent to Prepare Waste Confidence EIS." National Resources Defense Council, Washington, D.C. ML12314A345.

Fish and Wildlife Coordination Act of 1934, as amended. 16 USC 661-667e *et seq*.

FDOH (Florida Department of Health). 2001. *Report Concerning Cancer Rate in Southeastern Florida*. Bureau of Environmental Epidemiology, Tallahassee, Florida.

FMU (Fukushima Medical University). 2014. "Fukushima Health Management Survey." Fukushima, Japan. Available at https://www.fmu.ac.jp/radiationhealth/survey/.

FPL (Florida Power and Light Company). 2006. Letter from J.A. Stall to NRC, dated July 31, 2006, regarding "Groundwater Protection—Data Collection Questionnaire." Juno Beach, Florida. Accession No. ML062280570.

FWS/NMFS (U.S. Fish and Wildlife Service and National Marine Fisheries Service). 1998. *Endangered Species Consultation Handbook: Procedures for Conducting Consultation and Conference Activities Under Section 7 of the Endangered Species Act*. Washington, D.C. Accession No. ML12325A215.

GAO (U.S. Government Accountability Office). 1998. Letter from G.L. Jones to Senator B. Boxer and Representative G. Miller, dated May 22, 1998, regarding "Radioactive Waste: Answers to Questions Related to the Proposed Ward Valley Low-Level Radioactive Waste Disposal Facility." GAO RCED-98-40R; B-278691, Washington, D.C. Available at http://www.gao.gov/corresp/rc98040r.pdf.

GAO (U.S. Government Accountability Office). 2005. *Hazardous Waste Sites: Improved Effectiveness of Controls at Sites Could Better Protect the Public*. GAO-05-163, Washington, D.C. Available at http://www.gao.gov/assets/250/245140.pdf.

GAO (U.S. Government Accountability Office). 2012. *Spent Nuclear Fuel: Accumulating Quantities at Commercial Reactors Present Storage and Other Challenges*. GAO-12-797, Washington, D.C. Accession No. ML12261A336.

GAO (U.S. Government Accountability Office). 2013. *Commercial Spent Fuel: Observations on the Key Attributes and Challenges of Storage and Disposal Options*. GAO–13-532T, Washington, D.C. Available at http://www.gao.gov/products/GAO-13-532T.

GCRP (U.S. Global Change Research Program). 2009. *Global Climate Change Impacts in the U.S*. T.R. Karl, J.M. Melillo, and T.C. Peterson, eds. Cambridge University Press, New York. Accession No. ML100580077.

GCRP (U.S. Global Change Research Program). 2014. *Climate Change Impacts in the United States: The Third National Climate Assessment*. Melillo, J.M., T.C. Richmond, and G.W. Yohe, eds. U.S. Government Printing Office, Washington, D.C. Accession No. ML14129A233.

Global Change Research Act of 1990. 15 USC 2921 *et seq.*

Gorham, E.D., R.J. Breeding, J.C. Helton, T.D. Brown, W.B. Murfin, F.T. Harper, and S.C. Hora. 1993. *Evaluation of Severe Accident Risks: Methodology for the Containment, Source Term, Consequence, and Risk Integration Analyses*. NUREG/CR–4551, Revision 1, Sandia National Laboratories, Albuquerque, New Mexico. Accession No. ML072710062

Government Performance Results Act of 1993 (GPRA). Public Law 103-62, 107 Stat. 285.

HPS (Health Physics Society). 2004. "Radiation Risk in Perspective." Position Statement of the HPS, Bethesda, Maryland. Available at http://www.hps.org/documents/radiationrisk.pdf.

Hobbs Act, as amended. 18 USC 1951 *et seq.*

HWSP (Haverstraw Water Supply Project). 2012. "Comparison of HWSP Pilot Water to Current Rockland Drinking Water." Rockland, New York. Available at http://haverstrawwatersupplyproject.com/images/stories/pubs/Pilot%20Water%20Quality%20Chart.pdf.

IAEA (International Atomic Energy Agency). 1991. *Management of Severely Damaged Nuclear Fuel and Related Waste.* Technical Report Series No. 321, Vienna, Austria. Available at http://www.iaea.org/OurWork/ST/NE/NEFW/Technical-Areas/WTS/documents/Post_accident_documents/Management_of_Severely_Damaged_Fuel_trs321.pdf.

IAEA (International Atomic Energy Agency). 2005. *Radioactive Waste Management, Status and Trends—Issue #4*. IAEA/WMDB/ST/4, Vienna, Austria. Available at http://www-pub.iaea.org/MTCD/publications/PDF/WMDB-ST-4.pdf.

IAEA (International Atomic Energy Agency). 2009. *Management of Damaged Spent Nuclear Fuel*. IAEA Nuclear Energy Series NF-T-3.6, Vienna, Austria. Available at http://www-pub.iaea.org/MTCD/publications/PDF/Pub1395_web.pdf.

IAEA (International Atomic Energy Agency). 2011a. *Disposal of Radioactive Waste*. Specific Safety Requirements No. SSR-5, Vienna, Austria. Available at http://www-pub.iaea.org/MTCD/publications/PDF/Pub1449_web.pdf.

IAEA (International Atomic Energy Agency). 2011b. *Impact of High Burnup Uranium Oxide and Mixed Uranium-Plutonium Oxide Water Reactor Fuel on Spent Fuel Management*. IAEA Nuclear Energy Series NF-T-3.8, Vienna, Austria. Available at http://www-pub.iaea.org/books/IAEABooks/8428/Impact-of-High-Burnup-Uranium-Oxide-and-Mixed-Uranium-Plutonium-Oxide-Water-Reactor-Fuel-on-Spent-Fuel-Management.

IAEA (International Atomic Energy Agency). 2013. *Spent Fuel Storage Operation—Lessons Learned*. TECDOC No. 1725, Vienna, Austria. Available at http://www-pub.iaea.org/MTCD/Publications/PDF/TE-1725_web.pdf.

ICRP (International Commission on Radiological Protection). 1991. *1990 Recommendations of the International Commission on Radiological Protection*. ICRP Publication 60, Pergamon Press, New York, New York.

IDPH (Illinois Department of Public Health). 2000. "Pediatric Cancer Incidence and Proximity to Nuclear Facilities in Illinois." *Health and Hazardous Substances Registry Newsletter* 2000:1–2, Division of Epidemiologic Studies, Springfield, Illinois. Available at http://www.idph.state.il.us/cancer/pdf/article.pdf.

In re Aiken County. 725 F.3d 255 (D.C. Cir. 2013).

Jo, J.H., P.F. Rose, S.D. Unwin, V.L. Sailor, K.R. Perkins, and A.G. Tingle. 1989. *Value/Impact Analysis of Accident Preventative and Mitigative Options for Spent Fuel Pools.* NUREG/CR–5281, Brookhaven National Laboratory, Upton, New York. Accession No. ML071690022.

Limerick Ecology Action v. NRC (U.S. Nuclear Regulatory Commission). 869 F.2d 719 (3rd Cir. 1989).

Lindgren, E.R. and S.G. Durbin. 2013. *Characterization of Thermal-Hydraulic and Ignition Phenomena in Prototypic, Full-Length Boiling Water Reactor Spent Fuel Pool Assemblies After a Postulated Complete Loss-of-Coolant Accident*. NUREG/CR–7143, Sandia National Laboratory, 13 Albuquerque, New Mexico. Accession No. ML13072A056.

Lochbaum, D. 2012. "Cumulative Effects of Non-Regulation." *All Things Nuclear,* Union of Concerned Scientists, Cambridge, Massachusetts. Available at http://allthingsnuclear.org/cumulative-effects-of-non-regulation/.

Low-Level Radioactive Waste Policy Amendments Act of 1985, as amended. 42 USC 2021b *et seq.*

Magnuson-Stevens Act (Magnuson-Stevens Fishery Conservation and Management Act of 1976), as amended. 16 USC 1801 *et seq*.

Maine Yankee Power Co. v. United States. 225 F.3d 1336 (Fed. Cir. 2000).

Marine Mammal Protection Act of 1972, as amended. 16 USC 1361 *et seq*.

Marsh v. Oregon Natural Res. Council. 490 U.S. 360 (1989).

Massachusetts v. NRC (*U.S. Nuclear Regulatory Commission*). 708 F.3d 63 (1st Cir. 2013).

MDPH (Massachusetts Department of Public Health). 2014. "Pilgrim Nuclear Power Station (PNPS): Tritium in Groundwater Monitoring Wells, PNPS Updates as of February 7, 2014." Boston, Massachusetts. Available at http://www.mass.gov/eohhs/docs/dph/environmental/radiationcontrol/tritium/2014-updates/pnps-update-02-07-14.pdf.

Metropolitan Edison Co. v. People Against Nuclear Energy. 460 U.S. 766 (1983).

Migratory Bird Treaty Act of 1918, as amended. 16 USC 703 *et seq*.

Minnesota v. NRC (*U.S. Nuclear Regulatory Commission).* 602 F.2d 412 (D.C. Cir. 1979).

NAS (National Academy of Sciences). 1995. *Technical Bases for Yucca Mountain Standards*. National Academy of Sciences/National Research Council of Board on Radioactive Waste Management, Committee on the Remediation of Buried and Tank Waste, National Academy Press, Washington, D.C.

NAS (National Academy of Sciences). 2000. *Long-Term Institutional Management of the U.S. Department of Energy Legacy Waste Sites.* National Academy of Sciences/National Research Council of Board on Radioactive Waste Management, Committee on the Remediation of Buried and Tank Waste, National Academy Press, Washington, D.C.

NAS (National Academy of Sciences). 2006. *Safety and Security of Commercial Spent Nuclear Fuel Storage, Public Report.* The National Academies Press, Washington, D.C.

NARUC v. DOE (National Association of Regulatory Utility Commissioners et al. v. U.S. Department of Energy). 736 F.3d 517 (D.C. Cir. 2013).

National Environmental Policy Act of 1969 (NEPA), as amended. 42 USC 4321 *et seq*.

National Historic Preservation Act of 1966 (NHPA), as amended. 16 USC 470 *et seq.*

National Research Council. 2006. *Health Risks from Exposure to Low Levels of Ionizing Radiation: BEIR VII—Phase 2*. National Academies Press, Washington, D.C.

NCI (National Cancer Institute). 1990. *Cancer in Populations Living near Nuclear Facilities*. Bethesda, Maryland.

NEA (Nuclear Energy Agency). 2006. *The Roles of Storage in the Management of Long-Lived Radioactive Waste*. Organisation for Economic Co-Operation and Development, Paris, France. Available at https://www.oecd-nea.org/rwm/reports/2006/nea6043-storage.pdf.

NEI (Nuclear Energy Institute). 2007. *Industry Ground Water Protection Initiative—Final Guidance Document*. NEI 07-07, Washington, D.C. Accession No. ML072600295.

New York v. NRC (*State of New York et al. v. U.S. Nuclear Regulatory Commission)*. 681 F.3d 471 (D.C. Cir. 2012). Accession No. ML12191A407.

NFPA (National Fire Protection Association). 2009. *NFPA® 805: Performance-Based Standard for Fire Protection for Light Water Reactor Electric Generating Plants, 2010 Edition*. Quincy, Massachusetts.

NMFS (National Marine Fisheries Service). 2013. Letter from J.K. Bullard to NRC, dated June 13, 2013, regarding "Request from Earthrise to Reinitiate the Endangered Species Act (ESA) Section 7 Consultation for the Continues Operation of the Pilgrim Nuclear Power Plant." Gloucester, Massachusetts. Accession No. ML13165A108.

NRC (U.S. Nuclear Regulatory Commission). 1975. *Environmental Survey of Transportation of Radioactive Materials to and from Nuclear Power Plants*. *Supplement 1 to WASH-1238,* NUREG–75/038, Washington, D.C.

NRC (U.S. Nuclear Regulatory Commission). 1977a. *Final Environmental Impact Statement on the Transportation of Radioactive Material by Air and Other Modes*. NUREG–0170, Washington, D.C. Accession No. ML12192A283.

NRC (U.S. Nuclear Regulatory Commission). 1977b. *Calculation of Annual Doses to Man from Routine Releases of Reactor Effluents for the Purpose of Evaluating Compliance with 10 CFR Part 50, Appendix I*. Regulatory Guide 1.109, Revision 1, Washington, D.C. Accession No. ML003740384.

NRC (U.S. Nuclear Regulatory Commission). 1979. *Final Generic Environmental Impact Statement on Handling and Storage of Spent Light Water Power Reactor Fuel*. NUREG–0575, Washington, D.C. Accession No. ML022550127.

NRC (U.S. Nuclear Regulatory Commission). 1980. *Control of Heavy Loads at Nuclear Power Plants: Resolution of Generic Technical Activity A-36*. NUREG–0612, Washington, D.C. Accession No. ML070250180.

NRC (U.S. Nuclear Regulatory Commission). 1981. "Control of Radioactively Contaminated Material." IE Circular 81-07, Washington, D.C. Accession No. ML103420362. Available at http://www.nrc.gov/reading-rm/doc-collections/gen-comm/circulars/1981/cr81007.html.

NRC (U.S. Nuclear Regulatory Commission). 1985. "Surveys of Wastes Before Disposal from Nuclear Reactor Facilities." Information Notice No. 85-92, Washington, D.C. Available at http://www.nrc.gov/reading-rm/doc-collections/gen-comm/info-notices/1985/in85092.html.

NRC (U.S. Nuclear Regulatory Commission). 1989a. *Regulatory Analysis for the Resolution of Generic Issue 82, "Beyond Design Basis Accidents in Spent Fuel Pools*." NUREG–1353, Washington, D.C. Accession No. ML082330232.

NRC (U.S. Nuclear Regulatory Commission). 1989b. *Environmental Assessment for Proposed Rule Entitled, "Storage of Spent Nuclear Fuel in NRC-Approved Storage Casks at Nuclear Power Reactor Sites."* Washington, D.C. Accession No. ML051230231.

NRC (U.S. Nuclear Regulatory Commission). 1990. *Severe Accident Risks: An Assessment for Five U.S. Nuclear Power Plants*. NUREG–1150, Volume 1, Washington, D.C. Accession No. ML120960691.

NRC (U.S. Nuclear Regulatory Commission). 1994a. *Revised Livermore Seismic Hazard Estimates for Sixty-Nine Nuclear Power Plant Sites East of the Rocky Mountains*. NUREG–1488, Washington, D.C. Accession No. ML052640591.

NRC (U.S. Nuclear Regulatory Commission). 1994b. "Potential Fuel Pool Draindown Caused by Inadequate Maintenance Practices at Dresden Unit 1." Bulletin 94-01, Washington, D.C. Available at http://www.nrc.gov/reading-rm/doc-collections/gen-comm/bulletins/1994/bl94001.html.

NRC (U.S. Nuclear Regulatory Commission). 1995. *Accident Source Terms for Light-Water Nuclear Power Plants—Final Repor*t. NUREG–1465, Washington, D.C. Accession No. ML041040063.

NRC (U.S. Nuclear Regulatory Commission). 1996a. *Generic Environmental Impact Statement for License Renewal of Nuclear Plants.* Volumes 1 and 2, NUREG–1437, Washington, D.C. Accession Nos. ML040690705, ML040690738.

NRC (U.S. Nuclear Regulatory Commission). 1996b. *Information Handbook on Independent Spent Fuel Storage Installations*. NUREG–1571, Washington, D.C. Accession No. ML010450036.

NRC (U.S. Nuclear Regulatory Commission). 1996c. "Boraflex Degradation in Spent Fuel Pool Storage Racks." NRC Generic Letter 96-04, Washington, D.C. Accession No. ML031110008.

NRC (U.S. Nuclear Regulatory Commission). 1997a. *Regulatory Analysis Technical Evaluation Handbook*. NUREG/BR–0184, Washington, D.C. Accession No. ML050190193.

NRC (U.S. Nuclear Regulatory Commission). 1997b. "Policy Issue: Proposed Strategy for Development of Regulations Governing Disposal of High-Level Radioactive Wastes in a Proposed Repository at Yucca Mountain, Nevada." SECY-97-300, Washington, D.C. Accession No. ML032830444.

NRC (U.S. Nuclear Regulatory Commission). 1997c. *Generic Environmental Impact Statement in Support of Rulemaking on Radiological Criteria for License Termination of NRC-Licensed Nuclear Facilities*. NUREG–1496, Volume 1, Washington, D.C. Accession No. ML042310492.

NRC (U.S. Nuclear Regulatory Commission). 1997d. "Spent Fuel Pool Safety at Permanently Shutdown Reactors." Inspection Procedure 60801 in *NRC Inspection Manual*, Washington, D.C.

NRC (U.S. Nuclear Regulatory Commission). 1997e. "Maintenance and Surveillance at Permanently Shutdown Reactors." Inspection Procedure 62801 in *NRC Inspection Manual*, Washington, D.C.

NRC (U.S. Nuclear Regulatory Commission). 2000. *Standard Review Plan for Spent Fuel Dry Storage Facilities*. NUREG–1567, Washington, D.C.

NRC (U.S. Nuclear Regulatory Commission). 2001a. *Final Environmental Impact Statement for the Construction and Operation of an Independent Spent Fuel Storage Installation on the Reservation of the Skull Valley Band of Goshute Indians and the Related Transportation Facility in Tooele County, Utah.* NUREG–1714, Volume 1, Washington, D.C. Accession No. ML020150217.

NRC (U.S. Nuclear Regulatory Commission). 2001b. *Technical Study of Spent Nuclear Fuel Pool Accident Risk at Decommissioning Nuclear Power Plants*. NUREG–1738, Washington, D.C. Accession No. ML010430066.

NRC (U.S. Nuclear Regulatory Commission). 2001c. *Big Rock Point Plant Environmental Assessment and Finding of No Significant Impact*. Washington, D.C. Accession No. ML013370344.

NRC (U.S. Nuclear Regulatory Commission). 2001d. *Policy Issues Related to Safeguards, Insurance, and Emergency Preparedness Regulations at Decommissioning Nuclear Power Plants Storing Fuel in Spent Fuel Pools.* SECY-01-100, Washington, D.C.

NRC (U.S. Nuclear Regulatory Commission). 2002a. *Generic Environmental Impact Statement on Decommissioning of Nuclear Facilities, Supplement 1 Regarding the Decommissioning of Nuclear Power Reactors, Final Report.* NUREG–0586, Volumes 1 and 2, Washington, D.C. Accession Nos. ML023470327, ML023500228.

NRC (U.S. Nuclear Regulatory Commission). 2002b. *Status of the Entombment Option for Power Reactors.* SECY-02-0191, Washington, D.C. Accession No. ML022630647.

NRC (U.S. Nuclear Regulatory Commission). 2003a. *Environmental Review Guidance for Licensing Actions Associated with NMSS Programs.* Final Report, NUREG–1748, Washington, D.C. Accession No. ML032450279.

NRC (U.S. Nuclear Regulatory Commission). 2003b. "NRC Review of Paper on Reducing Hazards from Stored Spent Nuclear Fuel." Fact Sheet, Washington, D.C. Accession No. ML052340737.

NRC (U.S. Nuclear Regulatory Commission). 2003c. "Decommissioning Power Reactor Inspection Program." Chapter 2561 in *NRC Inspection Manual*, Washington, D.C. Available at http://www.nrc.gov/reading-rm/doc-collections/insp-manual/manual-chapter/mc2561.pdf.

NRC (U.S. Nuclear Regulatory Commission). 2004a. "Memorandum and Order in the Matter of Exelon Generation Company, LLC (Early Site Permit for Clinton ESP Site)." 60 NRC 229, 246-47 (August 6, 2004), Rockville, Maryland. Accession No. ML042260071.

NRC (U.S. Nuclear Regulatory Commission). 2004b. "Memorandum and Order in the Matter of Dominion Nuclear North Anna, LLC (Early Site Permit for North Anna ESP Site)." 60 NRC 253, 268-69 (August 6, 2004), Rockville, Maryland. Accession No. ML042260064.

NRC (U.S. Nuclear Regulatory Commission). 2004c. *Environmental Impact Statement for the Proposed Idaho Spent Fuel Facility at the Idaho National Engineering and Environmental Laboratory in Butte County, Idaho.* NUREG–1773, Washington, D.C. Accession No. ML040490135.

NRC (U.S. Nuclear Regulatory Commission). 2004d. *Issuance of Materials License No. SNM-2512 for the Idaho Spent Fuel Facility (TAC No. L23389)*. Washington, D.C. Accession No. ML043360251.

NRC (U.S. Nuclear Regulatory Commission). 2004e. *Safety Evaluation Report for the Idaho Spent Fuel Facility, Docket No. 72-25, Materials License No. SNM-2512*. Washington, D.C. Accession No. ML043360251.

NRC (U.S. Nuclear Regulatory Commission). 2004f. *Regulatory Analysis Guidelines of the U.S. Nuclear Regulatory Commission.* NUREG/BR–0058, Revision 4, Washington, D.C. Accession No. ML042820192.

NRC (U.S. Nuclear Regulatory Commission). 2005a. "Control of Security-Related Sensitive Unclassified Non-Safeguards Information Handled by Individuals, Firms, and Entities Subject to NRC Regulation of the Use of Source, Byproduct, and Special Nuclear Material." NRC Regulatory Issue Summary 2005-31, Washington, D.C.

NRC (U.S. Nuclear Regulatory Commission). 2005b. "Implications of Updated Probabilistic Seismic Hazard Estimates in Central and Eastern United States." Generic Issue 199, Washington, D.C.

NRC (U.S. Nuclear Regulatory Commission). 2006a. *Liquid Radioactive Release Lessons Learned Task Force Final Report.* Washington, D.C. Accession No. ML062650312.

NRC (U.S. Nuclear Regulatory Commission). 2006b. *Consolidated Decommissioning Guidance: Decommissioning Process for Materials Licensees.* NUREG–1757, Revision 2, Washington, D.C. Accession No. ML063000243.

NRC (U.S. Nuclear Regulatory Commission). 2006c. Letter from J. Cameron to C.M. Crane, dated September 28, 2006, regarding "NRC Inspection Report 050-00295/06-02 (DNMS)—Zion Nuclear Station." Washington, D.C. Accession No. ML062730010.

NRC (U.S. Nuclear Regulatory Commission). 2006d. *Indian Point Nuclear Generating Unit 2—NRC Special Inspection Report No. 05000247/2005011.* Washington, D.C. Accession No. ML060750842.

NRC (U.S. Nuclear Regulatory Commission). 2007a. "Memorandum and Order in the Matter of Entergy Nuclear Vermont Yankee LLC and Entergy Nuclear Operations, Inc., and Entergy Nuclear Generation Company and Entergy Nuclear Operations, Inc." CLI-07-03, Rockville, Maryland.

NRC (U.S. Nuclear Regulatory Commission). 2007b. *Division of Spent Fuel Storage and Transportation Interim Staff Guidance No. 1, Revision 2, "Classifying the Condition of Spent Nuclear Fuel for Interim Storage and Transportation Based on Function*." SFST-ISG-1, Washington, D.C. Accession No. ML071420250.

NRC (U.S. Nuclear Regulatory Commission). 2007c. *Generic Environmental Impact Statement for License Renewal of Nuclear Plants, Supplement 28, Regarding Oyster Creek Nuclear Generating Station.* NUREG–1437, Supplement 28, Volume 1, Washington, D.C. Accession No. ML070100234.

NRC (U.S. Nuclear Regulatory Commission). 2007d. *Generic Environmental Impact Statement for License Renewal of Nuclear Plants, Supplement 29, Regarding Pilgrim Nuclear Power Station, Final Report*. NUREG–1437, Supplement 29, Volume 1, Washington, D.C. Accession No. ML071990020.

NRC (U.S. Nuclear Regulatory Commission). 2007e. *A Pilot Probabilistic Risk Assessment of a Dry Cask Storage System at a Nuclear Power Plant*. NUREG–1864, Washington, D.C. Accession No. ML071340012.

NRC (U.S. Nuclear Regulatory Commission). 2007f. "Postulated Radioactive Releases Due to Liquid-Containing Tank Failures." Standard Review Plan, NUREG–0800, Washington, D.C. Accession No. ML070720635.

NRC (U.S. Nuclear Regulatory Commission). 2008. Letter from M.K. Gamberoni to J. Pollock, dated May 13, 2008, regarding "Indian Point Nuclear Generating Units 1 & 2—NRC Inspection Report Nos. 05000003/2007010 and 05000247/2007010." EA-08-088, Washington, D.C. Accession No. ML081340425.

NRC (U.S. Nuclear Regulatory Commission). 2009a. *Generic Environmental Impact Statement for In-Situ Leach Uranium Milling Facilities*. NUREG–1910, Vols. 1 and 2, Washington, D.C. Accession Nos. ML091480244, ML091480188.

NRC (U.S. Nuclear Regulatory Commission). 2009b. "Degradation of Neutron-Absorbing Materials in the Spent Fuel Pool." NRC Information Notice 2009-26, Washington, D.C. Accession No. ML092440545.

NRC (U.S. Nuclear Regulatory Commission). 2009c. Letter from D.J. Roberts to J. Pollock, dated October 19, 2009, regarding "Indian Point Nuclear Generating Units 1, 2, & 3—NRC Inspection Report Nos. 05000003/2009008; 05000247/2009008; and 05000286/2009008." King of Prussia, Pennsylvania. Accession No. ML092920121.

NRC (U.S. Nuclear Regulatory Commission). 2010a. *Waste Confidence Decision Update*. NRC–2008–0482–0166, Washington, D.C.

NRC (U.S. Nuclear Regulatory Commission). 2010b. *Generic Environmental Impact Statement for License Renewal of Nuclear Plants, Supplement 38 Regarding Indian Point Nuclear Generating Unit Nos. 2 and 3, Final Report, Main Report, and Comment Responses.* NUREG–1437, Supplement 38, Volume 1, Washington, D.C. Accession No. ML103350405.

NRC (U.S. Nuclear Regulatory Commission). 2010c. "NRC Asks National Academy of Sciences to Study Cancer Risk in Populations Living Near Nuclear Power Facilities." *NRC Nuclear News*, No. 10-060, Washington, D.C. Accession No. ML100970142.

NRC (U.S. Nuclear Regulatory Commission). 2010d. *A Short History of Nuclear Regulation, 1946–2009*. NUREG/BR–0175, Revision 2, Washington, D.C. Accession No. ML102980443.

NRC (U.S. Nuclear Regulatory Commission). 2010e. Letter from D.J. Roberts to M. Colomb, dated April 16, 2010, regarding "Vermont Yankee Nuclear Power Station Preliminary Results of Inspection Related to Vermont Yankee Ground Water Program and Recent Onsite Ground Water Contamination." King of Prussia, Pennsylvania. Accession No. ML101060419.

NRC (U.S. Nuclear Regulatory Commission). 2011a. "Policy Issue Information: Plan for the Long-Term Update to the Waste Confidence Rule and Integration with the Extended Storage and Transportation Initiative." SECY-11-0029, Washington, D.C. Accession No. ML110260244.

NRC (U.S. Nuclear Regulatory Commission). 2011b. *Background and Preliminary Assumptions for an Environmental Impact Statement—Long-Term Waste Confidence Update*. Draft Report for Comment, Washington, D.C. Accession No. M11340A141.

NRC (U.S. Nuclear Regulatory Commission). 2011c. *Final Environmental Impact Statement for Combined Licenses for Calvert Cliffs Nuclear Power Plant Unit 3.* NUREG–1936, Volumes 1 and 2, Washington, D.C. Accession Nos. ML11129A167, ML11129A179.

NRC (U.S. Nuclear Regulatory Commission). 2011d. *Final Environmental Impact Statement for Combined Licenses (COLs) for South Texas Project Electric Generating Station Units 3 and 4*. NUREG–1937, Washington, D.C. Accession No. ML11049A000.

NRC (U.S. Nuclear Regulatory Commission). 2011e. *Generic Environmental Impact Statement for License Renewal of Nuclear Plants, Supplement 45 Regarding Hope Creek Generating Station and Salem Nuclear Generating Station, Units 1 and 2—Final Report*. NUREG–1437, Supplement 45, Office of Nuclear Reactor Regulation, Washington, D.C. Accession No. ML11089A021.

NRC (U.S. Nuclear Regulatory Commission). 2011f. *Recommendations for Enhancing Reactor Safety in the 21st Century: The Near-Term Task Force Review of Insights from the Fukushima Dai-Ichi Accident*. SECY-11-0093, NRC Task Force, Washington, D.C. Accession No. ML111861807.

NRC (U.S. Nuclear Regulatory Commission). 2011g. *Standard Review Plan for Renewal of Spent Fuel Dry Cask Storage System Licenses and Certificates of Compliance—Final Report*. NUREG–1927, Washington, D.C. Accession No. ML111020115.

NRC (U.S. Nuclear Regulatory Commission). 2011h. *Indian Point Energy Center (IPEC) Unit 3 Updated Final Safety Analysis Report (UFSAR)*. Partial Release with Redacted Information, Washington, D.C. Accession No. ML11236A228.

NRC (U.S. Nuclear Regulatory Commission). 2011i. "Policy Issue (Information): Senior Management Review of Overall Regulatory Approach to Groundwater Protection." SECY-11-0019, Washington, D.C.

NRC (U.S. Nuclear Regulatory Commission). 2011j. *Summary of Results from Completion of NRC's Temporary Instruction on Groundwater Protection, TI-2515/173 Industry Groundwater Protection Initiation.* Washington, D.C. Accession No. ML11088A047.

NRC (U.S. Nuclear Regulatory Commission). 2011k. Memorandum from A.L. Vietti-Cook to R.W. Borchardt, dated August 15, 2011, regarding "Staff Requirements—SECY-11-0019—Senior Management Review of Overall Regulatory Approach to Groundwater Protection." Washington, D.C. Accession No. ML112270292.

NRC (U.S. Nuclear Regulatory Commission). 2011l. Memorandum from A.L. Vietti-Cook to R.W. Borchardt and J.E. Dyer, dated December 15, 2011, regarding "Staff Requirements—SECY-11-0137—Prioritization of Recommended Actions to be Taken in Response to Fukushima Lessons Learned." Washington, D.C. Accession No. ML113490055.

NRC (U.S. Nuclear Regulatory Commission). 2012a. Memorandum from A.L. Vietti-Cook to R.W. Borchardt dated September 6, 2012, regarding "Staff Requirements—COMSECY-12-0016—Approach for Addressing Policy Issues Resulting from Court Decision to Vacate Waste Confidence Decision and Rule." SRM-COMSECY-12-0016, Washington, D.C. Accession No. ML12250A032.

NRC (U.S. Nuclear Regulatory Commission). 2012b. Memorandum and Order dated August 7, 2012, regarding "Petition to Suspend Final Decision on All Pending Reactor Licensing Proceedings." Commission Order CLI–12–16, Washington, D.C. Accession No. ML12220A094.

NRC (U.S. Nuclear Regulatory Commission). 2012c. Memorandum from R.W. Borchardt to Chairman Mcfarlane and Commissioners Svinicki, Apostolakis, Magwood, and Ostendorff, dated July 9, 2012, regarding "Approach for Addressing Policy Issues Resulting from Court Decision to Vacate Waste Confidence Decision and Rule." COMSECY-12-0016, Washington, D.C. Accession No. ML12180A424.

NRC (U.S. Nuclear Regulatory Commission). 2012d. Letter from A.M. Macfarlane to D. Curran, dated December 5, 2012, regarding "Concern About NRC's Federal Register Notice Regarding Updates to the Commission's Waste Confidence Rule." Washington, D.C. Accession No. ML12319A309.

NRC (U.S. Nuclear Regulatory Commission). 2012e. Letter from E. Leeds to All Power Reactor Licensees and Holders of Construction Permits in Active or Deferred Status dated March 12, 2012, regarding "Request for Information Pursuant to Title 10 of the Code of Federal Regulations 50.54(f) Regarding Recommendations 2.1, 2.3, and 9.3, of the Near-Term Task Force Review of Insights from the Fukushima Dai-ichi Accident." Washington, D.C. Accession No. ML12053A340.

NRC (U.S. Nuclear Regulatory Commission). 2012f. "Memorandum and Order in the Matter of Entergy Nuclear Generation Company and Entergy Nuclear Operations, Inc. (Pilgrim Nuclear Power Station)." LBP-12-11, Rockville, Maryland. Accession No. ML12170A914.

NRC (U.S. Nuclear Regulatory Commission). 2012g. *Environmental Impact Statement for Combined Licenses (COLs) for Levy Nuclear Plant Units 1 and 2—Final Report*. NUREG–1941, Washington, D.C. Accession No. ML12100A063.

NRC (U.S. Nuclear Regulatory Commission). 2012h. *Standard Review Plan for the Review of Safety Analysis Reports for Nuclear Power Plants: LWR Edition*. NUREG–0800, Washington, D.C.

NRC (U.S. Nuclear Regulatory Commission). 2012i. "Memorandum and Order in the Matter of Entergy Nuclear Generation Company and Entergy Nuclear Operations, Inc. (Pilgrim Nuclear Power Station)." LBP-12-10, Rockville, Maryland. Accession No. ML12145A626.

NRC (U.S. Nuclear Regulatory Commission). 2012j. "Policy Issue Notation Vote: Consideration of Economic Consequences Within the U.S. Nuclear Regulatory Commission's Regulatory Framework." SECY-12-0110, Washington, D.C. Accession No. ML12173A479.

NRC (U.S. Nuclear Regulatory Commission). 2012k. "Policy Issue Notation Vote: Consideration of Additional Requirements for Containment Venting Systems for Boiling Water Reactors with Mark I and Mark II Containments." SECY-12-0157, Washington, D.C. Accession No. ML12325A704.

NRC (U.S. Nuclear Regulatory Commission). 2012l. "Potential Chloride-Induced Stress Corrosion Cracking of Austenitic Stainless Steel and Maintenance of Dry Cask Storage System Canisters." NRC Information Notice 2012-20, Washington, D.C. Accession No. ML12319A440.

NRC (U.S. Nuclear Regulatory Commission). 2012m. *Indian Point Nuclear Generating Unit List of Exemptions.* Washington, D.C. Accession No. ML12172A370.

NRC (U.S. Nuclear Regulatory Commission). 2012n. Letter from C.A. Lipa to J.A Christian, dated June 8, 2012, regarding "NRC Inspection Report 050-00295/12-007 (DNMS); 050-00304/12-007 (DNMS)—Zion Nuclear Power Station." Washington, D.C. Accession No. ML12163A349.

NRC (U.S. Nuclear Regulatory Commission). 2012o. "In the Matter of Entergy Nuclear Operations, Inc. (Indian Point Nuclear Generating Units 2 and 3) —Order Granting in Part and Denying in Part Applicant's Motions in Limine." Rockville, Maryland. Accession No. ML12066A170.

NRC (U.S. Nuclear Regulatory Commission). 2012p. "Inspection Program for Dry Storage of Spent Reactor Fuel at Independent Spent Fuel Storage Installations and for 10 CFR 71 Transportation Packagings." Chapter 2690 in *NRC Inspection Manual*, Washington, D.C. Accession No. ML120390415.

NRC (U.S. Nuclear Regulatory Commission). 2012q. "Compatibility Requirements for Storage and Transportation of Spent Nuclear Fuel (Retrievability, Cladding Integrity, and Safe Handling)." Issue Summary, Washington, D.C. Accession No. ML12220A552.

NRC (U.S. Nuclear Regulatory Commission). 2013a. Letter from S. Lopas to A. Imboden, dated August 21, 2013, regarding "Summary of August Public Teleconference to Discuss Status of Waste Confidence Generic Environmental Impact Statement and Rulemaking." Washington, D.C. Accession No. ML13204A111.

NRC (U.S. Nuclear Regulatory Commission). 2013b. Letter from S. Lopas to A. Imboden, dated September 24, 2013, regarding "Summary of September Public Teleconference to Discuss Status of Waste Confidence Generic Environmental Impact Statement and Rulemaking." Washington, D.C. Accession No. ML13267A384.

NRC (U.S. Nuclear Regulatory Commission). 2013c. "NRC Schedules 12 Meetings Nationwide on Waste Confidence Proposed Rule and Environmental Study." Press Release No. 13-072, dated September 5, 2013. Washington, D.C. Accession No. ML13248A595.

NRC (U.S. Nuclear Regulatory Commission). 2013d. "NRC Postpones California Meetings on Waste Confidence Because of Government Shutdown." Press Release No. 13-083, dated October 4, 2013. Washington, D.C. Accession No. ML13277A694.

NRC (U.S. Nuclear Regulatory Commission). 2013e. "NRC Postpones Ohio, Minnesota Meetings on Waste Confidence Because of Government Shutdown." Press Release No. 13-085, dated October 9, 2013. Washington, D.C. Accession No. ML13282A511.

NRC (U.S. Nuclear Regulatory Commission). 2013f. "NRC Schedules Nov. 4 Meeting in Charlotte to Take Comments on Proposed Spent Nuclear Fuel Rule and Environmental Study." Press Release No. II-13-059, dated October 25, 2013. Washington, D.C. Accession No. ML13298A873.

NRC (U.S. Nuclear Regulatory Commission). 2013g. "NRC Schedules Nov. 6 Meeting in Orlando to Take Comments on Proposed Spent Nuclear Fuel Rule and Environmental Study." Press Release No. II-13-060, dated October 28, 2013. Washington, D.C. Accession No. ML13301A733.

NRC (U.S. Nuclear Regulatory Commission). 2013h. "NRC Extends Public Comment Period for Proposed Rule and Environmental Study on Extended Storage of Spent Nuclear Fuel." Press Release No. 13-089, dated October 28, 2013. Washington, D.C. Accession No. ML13301A723.

NRC (U.S. Nuclear Regulatory Commission). 2013i. Letter from A.M. Macfarlane to W.H. Sorrell, dated July 23, 2013, regarding "Petition for Review of [Nuclear Regulatory Commission (NRC)] Staff Scoping Decision." Filed jointly by the State of Vermont, State of Connecticut, State of New York, and the Commonwealth of Massachusetts. Washington, D.C. Accession No. ML13204A315.

NRC (U.S. Nuclear Regulatory Commission). 2013j. *Waste Confidence Generic Environmental Impact Statement Scoping Process Summary Report*. Washington, D.C. Accession No. ML13060A128.

NRC (U.S. Nuclear Regulatory Commission). 2013k. *Scoping Comments on the Waste Confidence Generic Environmental Impact Statement.* Washington, D.C. Accession No. ML13060A130.

NRC (U.S. Nuclear Regulatory Commission). 2013l. *Consequence Study of a Beyond-Design-Basis Earthquake Affecting the Spent Fuel Pool for a U.S. Mark I Boiling Water Reactor*. SECY-13-0112, Washington, D.C. Accession No. ML13256A334.

NRC (U.S. Nuclear Regulatory Commission). 2013m. *Generic Environmental Impact Statement for License Renewal of Nuclear Plants.* NUREG–1437, Volume 1, Revision 1, Washington, D.C. Accession No. ML13107A023.

NRC (U.S. Nuclear Regulatory Commission). 2013n. *Staff Evaluation and Recommendation for Japan Lessons-Learned Tier 3 Issue on Expedited Transfer of Spent Fuel*. COMSECY–13–0030, Washington, D.C. Accession Nos. ML13273A601, ML13273A628.

NRC (U.S. Nuclear Regulatory Commission). 2013o. *Draft Environmental Assessment for the Proposed Renewal of U.S. Nuclear Regulatory Commission License No. SNM-2506 for Prairie Island Independent Spent Fuel Storage Installation*. Docket No. 72-0010, Washington, D.C. Accession No. ML13205A120.

NRC (U.S. Nuclear Regulatory Commission). 2013p. *Generic Environmental Impact Statement for License Renewal of Nuclear Plants, Supplement 38, Regarding Indian Point Nuclear Generating Unit Nos. 2 and 3, Final Report, Supplemental Report, and Comment Responses.* NUREG–1437, Volume 4, Washington, D.C. Accession No. ML13162A616.

NRC (U.S. Nuclear Regulatory Commission). 2013q. Letter from M.C. Wong to NMFS, dated May 31, 2013, regarding "Earthrise Law Center's Request for NRC to Reinitiate Section 7 Consultation with the National Marine Fisheries Service for Continued Operation of Pilgrim Nuclear Power Station." Washington, D.C. Accession No. ML13122A462.

NRC (U.S. Nuclear Regulatory Commission). 2013r. *Report on Waste Burial Charges: Changes in Decommissioning Waste Disposal Costs at Low-Level Waste Burial Facilities*. NUREG–1307, Revision 15, Washington, D.C. Accession No. ML13023A030.

NRC (U.S. Nuclear Regulatory Commission). 2013s. "Memorandum and Order in the Matter of U.S Department of Energy (High Level Waste Repository)." CLI-13-08, Rockville, Maryland. Accession No. ML13322A744.

NRC (U.S. Nuclear Regulatory Commission). 2013t. *Interim Staff Guidance on Emergency Planning Exemption Requests for Decommissioning Nuclear Power Plants*. NSIR/DPR-ISG-02, Washington, D.C. Accession No. ML13304B442.

NRC (U.S. Nuclear Regulatory Commission). 2013u. "Commission Voting Record on Proposed Rule: Waste Confidence—Continued Storage of Spent Nuclear Fuel (RIN 3150–AJ20)." Decision Item SECY–13–0061, Washington, D.C. Accession No. ML13217A245.

NRC (U.S. Nuclear Regulatory Commission). 2013v. *Federal Register Notice for Security Requirements for Facilities Storing Spent Nuclear Fuel and High-Level Waste Regulatory Basis Comment Resolution*. Washington, D.C. Accession No. ML13085A150.

NRC (U.S. Nuclear Regulatory Commission). 2014a. Memorandum from R.C. Bavol to M.A. Atorius dated May 23, 2014, "Staff Requirements—COMSECY-13-0030—Staff Evaluation and Recommendation for Japan Lessons-Learned Tier 3 Issue on Expedited Transfer of Spent Fuel." Washington, D.C. Accession No. ML14143A360.

NRC (U.S. Nuclear Regulatory Commission). 2014b. "In the Matter of Proposed Rule: Waste Confidence—Continued Storage of Spent Nuclear Fuel 10 CFR Part 51; Draft Waste Confidence Generic Environmental Impact Statement." PRM-51-30, Washington, D.C. Accession No. ML14029A124.

NRC (U.S. Nuclear Regulatory Commission). 2014c. *Generic Environmental Impact Statement for License Renewal of Nuclear Plants. Supplement 52 Regarding Davis-Besse Nuclear Power Station*. NUREG–1437, Supplement 52, Draft Report for Comment, Washington, D.C. Accession No. ML14050A290.

NRC (U.S. Nuclear Regulatory Commission). 2014d. *Spent Fuel Transportation Risk Assessment Final Report.* NUREG–2125, Washington, D.C. Accession No. ML14031A323.

NRC (U.S. Nuclear Regulatory Commission). 2014e. *Identification and Prioritization of the Technical Information Needs Affecting Potential Regulation of Extended Storage and Transportation of Spent Nuclear Fuel.* Washington, D.C. Accession No. ML14043A423.

NRDC v. NRC (*Natural Resources Defense Council v. U.S. Nuclear Regulatory Commission*). 582 F.2d 166 (2nd Cir. 1978).

Nuclear Waste Administration Act 2013, Senate Bill 1240, 113th Congress (2013).

Nuclear Waste Policy Act of 1982 (NWPA), as amended. 42 USC 10101 *et seq*.

NYSDEC (New York State Department of Environmental Conservation). 2010. *Technical Guidance for Site Investigation and Remediation*. DER-10, Albany, New York. Available at http://www.dec.ny.gov/docs/remediation_hudson_pdf/der10.pdf.

OMB (Office of Management and Budget). 2003. *Circular A-4: Regulatory Analysis*. NRC000060, Washington, D.C. Accession No. ML11231A834.

PGEC (Pacific Gas and Electric). 2006. Letter from T. Nelson to NRC, dated July 31, 2006, regarding "Humboldt Bay Power Plant, Unit 3 Groundwater Protection—Data Collection Questionnaire." Eureka, California. Accession No. ML063320158.

Prasad, R. 2009. *Tsunami Hazard Assessment at Nuclear Power Plant Sites in the United States of America—Final Report*. NUREG/CR–6966, Pacific Northwest National Laboratory, Richland, Washington. Accession No. ML091590193.

Price-Anderson Amendments Act of 2005, as amended. 42 USC 2011 *et seq*.

Price-Anderson Act (Price-Anderson Nuclear Industries Indemnity Act of 1957), as amended. 42 USC 2210 *et seq*.

Public Employees for Envtl. Responsibility v. NRC (U.S. Nuclear Regulatory Commission). No. 13-cv-01248-JDB (D.D.C.).

Ramsdell, J.V., Jr, C.E. Beyer, D.D. Lanning, U.P. Jenquin, R.A. Schwarz, D.L. Strenge, P.M. Daling, and R.T. Dahowski. 2001. *Environmental Effects of Extending Fuel Burnup Above 60 GWd/MTU.* NUREG/CR-6703, Pacific Northwest National Laboratory, Richland, Washington. Accession No. ML010310298.

Resource Conservation and Recovery Act of 1976 (RCRA). 42 USC 6927(c) *et seq.*

Safe Drinking Water Act, as amended. 42 USC 300f *et seq.*

Sailor, V.L, K.R. Perkins, J.R. Weeks, and H.R. Connell. 1987. *Severe Accidents in Spent Fuel Pools in Support of Generic Safety Issue 82.* NUREG/CR–4982, Brookhaven National Laboratory, Upton, New York. Available at http://www.osti.gov/bridge/servlets/purl/6135335-5voofL/6135335.pdf.

San Luis Obispo Mothers for Peace v. NRC (U.S. Nuclear Regulatory Commission). 449 F.3d 1016 (9th Cir. 2006).

So. Nuclear Operating Co. v. United States. 637 F.3d 1297 (2011).

Sprung, J.L., D.J. Ammerman, N.L. Breivik, R.J. Dukart, F.L. Kanipe, J.A. Koski, G.S. Mills, 11 K.S. Neuhauser, H.D. Radloff, R.F. Weiner, and H.R. Yoshimura. 2000. *Reexamination of* 12 *Spent Fuel Shipment Risk Estimates*. NUREG/CR–6672, Sandia National Laboratory, Albuquerque, New Mexico. Accession No. ML003698324.

Talbott, E.O., A.O Youk, K.P. McHugh, J.D. Shire, A. Zhang, B.P. Murphy, and R.A. Engberg. 2000. "Mortality among the Residents of the Three Mile Island Accident Area: 1979-1992." *Environmental Health Perspectives*, 108:545-552.

Travis, R.J., R.E. Davis, E.J. *Grove*, and M.A. Azarm. 1997. *Safety and Regulatory Assessment of Generic BWR and PWR Permanently Shutdown Nuclear Power Plants*. NUREG/CR–6451 Brookhaven National Laboratory, Upton, New York. Available at http://www.osti.gov/bridge/servlets/purl/510336-qmwPBP/webviewable/510336.pdf.

Union of Concerned Scientists v. NRC (U.S. Nuclear Regulatory Commission). 880 F.2d 552 (D.C. Cir. 1989).

UNSCEAR (United Nations Scientific Committee on the Effects of Atomic Radiation). 2013. *UNSCEAR 2013 Report: Sources, Effects and Risks of Ionizing Radiation*." Vienna, Austria. Available at http://www.unscear.org/unscear/en/publications/2013_1.html.

UNSCEAR (United Nations Scientific Committee on the Effects of Atomic Radiation). 2014. "The Fukushima-Daiichi Nuclear Power Plant Accident—UNSCEAR's Assessment of Levels and Effects of Radiation Exposure Due to the Nuclear Accident after the 2011 Great East-Japan Earthquake and Tsunami." Vienna, Austria. Available at http://www.unscear.org/unscear/en/fukushima.html.

USACE (U.S. Army Corps of Engineers). 2000. *Establishing and Maintaining Institutional Controls for Ordnance and Explosives (OE) Projects*. Engineer Pamphlet 1110-1-24, EP 1110-1-24, Washington, D.C. Available at http://www.publications.usace.army.mil/Portals/76/Publications/EngineerPamphlets/EP_1110-1-24.pdf.

WHO (World Health Organization). 2013. *Health Risk Assessment from the Nuclear Accident after the 2011 Great East Japan Earthquake and Tsunami, Based on a Preliminary Dose Estimation*. Geneva, Switzerland. Available at http://www.who.int/ionizing_radiation/pub_meet/fukushima_risk_assessment_2013/en/.

YAEC (Yankee Atomic Energy Company). 2006. *Groundwater Monitoring Plan to Support Closure Under the Massachusetts Contingency*. Rowe, Massachusetts. Accession No. ML071670009.

NRC FORM 335
(12-2010)
NRCMD 3.7

U.S. NUCLEAR REGULATORY COMMISSION

BIBLIOGRAPHIC DATA SHEET

(See instructions on the reverse)

1. REPORT NUMBER
(Assigned by NRC, Add Vol., Supp., Rev., and Addendum Numbers, if any.)
NUREG-2157, Volume 2
FINAL

2. TITLE AND SUBTITLE
Generic Environmental Impact Statement for Continued Storage of Spent Nuclear Fuel - Final Report and Public Comments

3. DATE REPORT PUBLISHED

MONTH	YEAR
September	2014

4. FIN OR GRANT NUMBER

5. AUTHOR(S)
U.S. NRC

6. TYPE OF REPORT
Technical

7. PERIOD COVERED (Inclusive Dates)

8. PERFORMING ORGANIZATION - NAME AND ADDRESS (If NRC, provide Division, Office or Region, U. S. Nuclear Regulatory Commission, and mailing address; if contractor, provide name and mailing address.)
Waste Confidence Directorate
Office of Nuclear Material Safety and Safeguards
U.S. Nuclear Regulatory Commission
Washington, DC 20555-0001

9. SPONSORING ORGANIZATION - NAME AND ADDRESS (If NRC, type "Same as above", if contractor, provide NRC Division, Office or Region, U. S. Nuclear Regulatory Commission, and mailing address.)
Same as above

10. SUPPLEMENTARY NOTES

11. ABSTRACT (200 words or less)
This Generic Environmental Impact Statement for Continued Storage of Spent Nuclear Fuel (GEIS) examines the potential environmental impacts that could occur as a result of the continued storage of spent nuclear fuel at at-reactor and away-from-reactor sites until a repository is available. For the resource areas considered, this GEIS attempts to establish generic impact determinations that would be applicable to a wide range of existing and potential future spent fuel storage sites. While some site-specific information is used in developing the generic impact determinations, the NRC does not intend for this GEIS to replace the NEPA analysis associated with any individual licensing action. This GEIS makes maximum use of existing environmental impact determinations, site-specific data, publicly available literature, and public comments received.

This GEIS evaluated alternatives to the proposed action, including options under the no-action alternative (site-specific licensing review, a GEIS-only option, and a policy statement). The proposed action would have the same potential environmental impacts as any of the alternatives evaluated. However, as shown in quantitative analysis of costs, the cost for the proposed action is less than the cost for any of the alternatives.

12. KEY WORDS/DESCRIPTORS (List words or phrases that will assist researchers in locating the report.)
EIS, GEIS, environmental impact statement, NEPA, national environmental policy act, waste confidence, waste confidence decision, waste confidence rule, continued storage

13. AVAILABILITY STATEMENT
unlimited

14. SECURITY CLASSIFICATION
(This Page)
unclassified
(This Report)
unclassified

15. NUMBER OF PAGES

16. PRICE

Printed
on recycled
paper

Federal Recycling Program

UNITED STATES
NUCLEAR REGULATORY COMMISSION
WASHINGTON, DC 20555-0001

OFFICIAL BUSINESS

NUREG-2157, Vol. 2
Final

Generic Environmental Impact Statement for
Continued Storage of Spent Nuclear Fuel

September 2014